BOL-G8 SERIES

OUTDOOR LIGHTING

BOL-G8-100Q-MCTP-BK
BOL-G8-100Q-MCTP-BR

Customer Name:

Project Name:

Note: | Type:

The G8 4-Zone quadrant Modular Bollard System is a high-performance outdoor lighting solution designed for flexible illumination control and modern aesthetics. Its modular architecture allows for easy installation and reconfiguration, while the 4-Zone quadrant reflector delivers balanced, efficient light distribution.

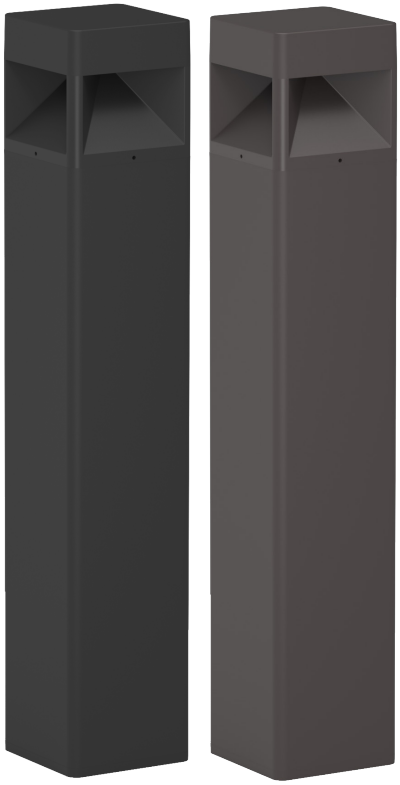



Power & CCT Switches under the Modular Head

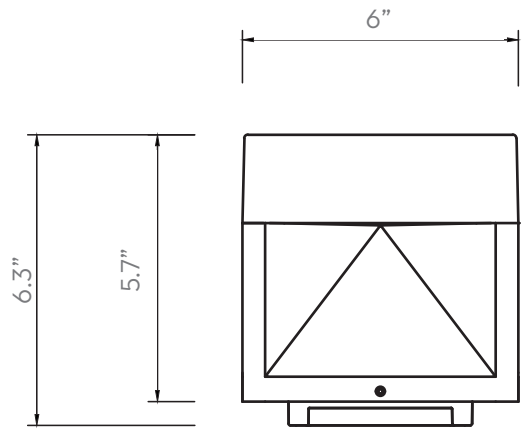

Technical Drawing: 5.7” (L) x 6” (W) x 6.3” (H)

FEATURES:

- Head 4-Zone quadrant, Chrome Reflector, Black/Bronze
- Corrosion Resistant Aluminum for Exterior
- Wattage & CCT Selectable Switches inside fixture
- 7-Year Warranty

SPECIFICATIONS:

ELECTRICAL:

- Voltage: 120-277VAC
- Wattage: 10W//18W/25W
- Power Factor: >0.9
- Efficacy: 80 LPW

MECHANICAL:

- Head 4-Zone quadrant, Black/Bronze
- Dark Sky Compliant
- Corrosion Resistant Aluminum for Exterior
- Mounting accessories and anchor poles sold separately see the accessories
- Operating Temperature: -40°F to 122°F
- 5 Years Warranty
- IP Rating: IP65, Wet Locations

LIGHTING:

- Wattage & CCT Selectable Switches inside fixture
- Lumens: 2000LM Max.
- Color Temperatures: 3000K/4000K/5000K
- Color Rendering Index: CRI ≥ 80
- Beam Angle : 90°
- Lifespan: 50000 Hours

APPLICATIONS:

Ideal for pathways, walkways, plazas, and landscaped areas requiring controlled, glare-managed illumination. The G8 Square Bollard System is well suited for commercial, residential, and institutional outdoor environments

OTHER MODELS:

10W/18W/25W/| 2000LM | BOL-G8-100QMCTP-BK-WH
10W/18W/25W/| 2000LM | BOL-G8-100QMCTP-BR-WH

Phone/Fax: (877) 805-2252
www.westgatemfg.com

PHOTOMETRICS

BUG rating

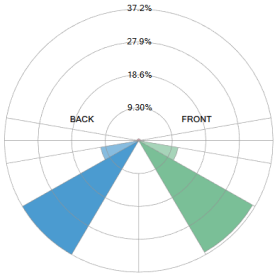

Rating: B1 U1 G1

Forward Light		
Low (0-30°)	2.17	0.202%
Medium (30-60°)	392	36.4%
High (60-80°)	119.4	11.1%
Very High (80-90°)	14.79	1.38%
Back Light		
Low (0-30°)	2.628	0.244%
Medium (30-60°)	400.3	37.2%
High (60-80°)	115.4	10.7%
Very High (80-90°)	14.36	1.34%
Uplight		
Low (90-100°)	8.67	0.806%
High (100-180°)	5.839	0.543%
Total		
Sum	1076	100%

IESNA TM-15-07 Luminaire Classification System For Outdoor Luminaires

BUG Rating: B1-U1-G1

Iso-illuminance plot

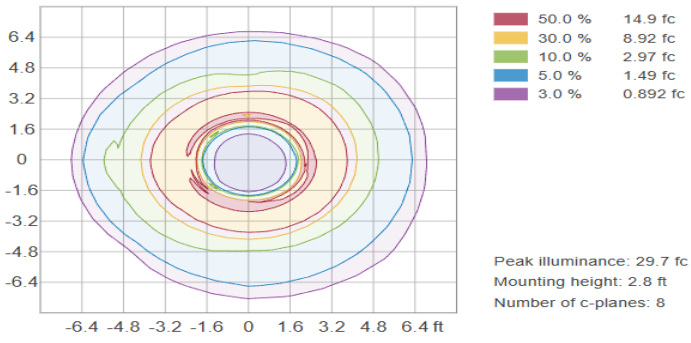

Peak illuminance: 29.7 fc
Mounting height: 2.8 ft
Number of c-planes: 8

Area 6.4'x6.4'

PERFORMANCE TABLE

MODEL NO.	WATTAGE	VOLTAGE	LUMENS	COLOR TEMP.	BUG RATING	LPW
BOL-G8-100Q-MCTP-BK **BOL-G8-100Q-MCTP-BR**	10W 18W 25W	120-277V	800LM 1440LM 2000LM	3000K/4000K/5000K	B1-U1-G1	80

ACCESSORIES

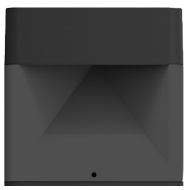

Head

BOL-G8-100Q-MCTP-BK
G8 SQUARE MODULAR BOLLARD
WITH CONE REFELECTOR



Shaft
Avail.in: 10"/20"/26"/34"
(Sold Separately)

BOL-G8-SHAFT-10-BK
BOL-G8-SHAFT-20-BK
BOL-G8-SHAFT-26-BK
BOL-G8-SHAFT-34-BK



G8 Bollard Anchor Bolt Kit
(Sold Separately)

BOL-G8-ABK



10" Shaft+Head : 16"x 6"x 6"
20" Shaft+Head: 26"x 6"x 6"
26" Shaft+Head:32"x 6"x 6"
34" Shaft+Head: 40"x 6"x 6"

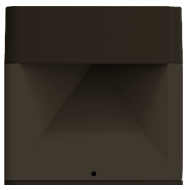

Head

BOL-G8-100Q-MCTP-BR
G8 SQUARE MODULAR BOLLARD
WITH CONE REFELECTOR



Shaft
Avail.in: 10"/20"/26"/34"
(Sold Separately)

BOL-G8-SHAFT-10-BR
BOL-G8-SHAFT-20-BR
BOL-G8-SHAFT-26-BR
BOL-G8-SHAFT-34-BR



G8 Bollard Anchor Bolt Kit
(Sold Separately)

BOL-G8-ABK



10" Shaft+Head : 16"x 6"x 6"
20" Shaft+Head: 26"x 6"x 6"
26" Shaft+Head:32"x 6"x 6"
34" Shaft+Head: 40"x 6"x 6"

DRAWINGS

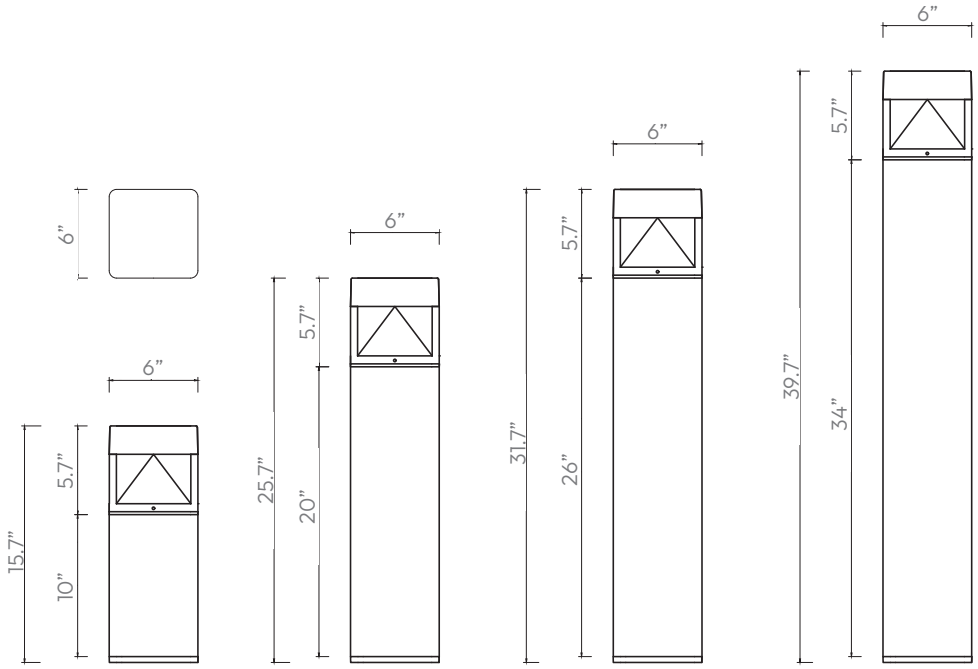

10" Shaft : 10"x 5.7"x 6"
20" Shaft: 20"x 5.7"x 6"
26" Shaft: 26"x 5.7"x 6"
34" Shaft: 34"x 5.7"x 6"
(Sold Separately)

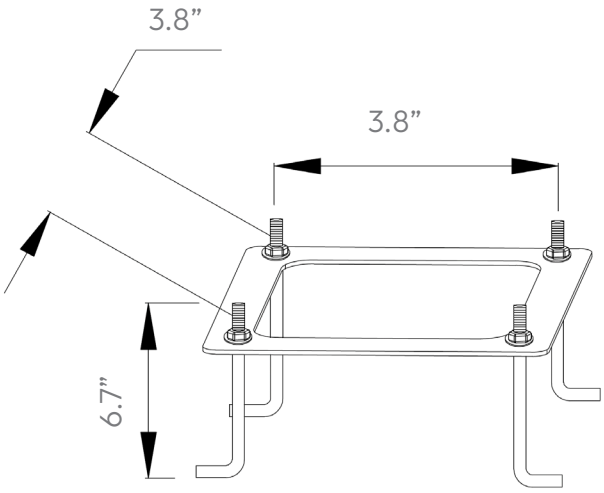

BOL-G8-ABK : 6.7"x 3.8"x3.8"
(Sold Separately)