BKR SERIES MCTP

COMMERCIAL OUTDOOR LIGHTING

BKR-36W-MCTP-6OW-P-BR
BKR-36W-MCTP-6OW-P-BK
BKR-36W-MCTP-6OW-P-WH

14" Round Flat Bulkhead with Photocell, Power & CCT Selectable



Black Bronze White



Front View



Back View

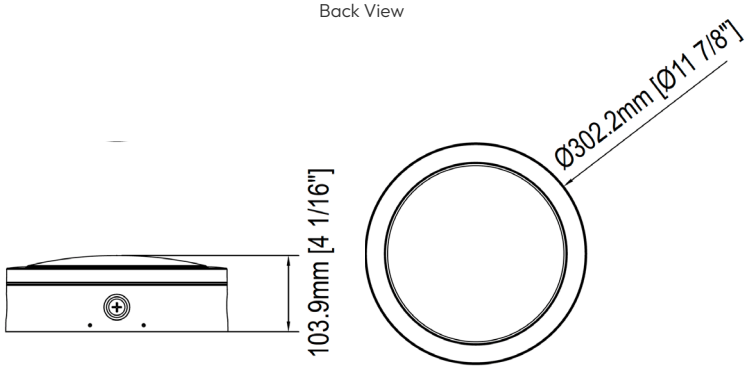

Technical Drawing: 4 1/16" (H) x11 7/8" (D)

The BKR Series 14" Round Flat Bulkhead is a wet-location LED wall or ceiling fixture designed for exterior and utility lighting applications. Featuring selectable wattage, selectable CCT, 0-10V dimming, and an integrated photocell, this fixture provides installation flexibility while reducing SKU requirements. Its cast aluminum housing, rubber seal, and frosted PC lens deliver durable performance for outdoor and damp environments, while optional field-replaceable trims allow the fixture appearance to be customized after installation.

Customer Name:

Project Name:

Note: | Type:

FEATURES:

- Field selectable power and CCT reduces inventory requirements
- Built-in photocell for dusk-to-dawn operation
- 0-10V dimming for controlled light output
- Wet-location/IP65 rated for outdoor applications
- Replaceable trim accessory options available
- Durable housing designed for exterior and utility lighting applications
- Suitable for porches, patios, decks, cabins, basements, storerooms, attics, docks, and similar applications

SPECIFICATIONS:

ELECTRICAL

- Input Voltage: 120-277VAC
- Power Selectable: 36W / 48W / 60W
- Dimming: 0-10V dimming
- Built-in DC photocell with ON/OFF DIP switch
- Includes 12V AUX
- Operating Temperature: -40°F to +113°F
- Lifespan: 70,000 Hours
- Warranty: 7 Years

LIGHTING

- CCT Selectable: 3000K / 4000K / 5000K
- CRI: >80
- Frosted PC lens
- Lumen Output:
- 36W: 4,532LM
- 48W: 6,018LM
- 60W: 7,182LM
- Efficacy:
- 36W: 132 LM/W
- 48W: 131 LM/W
- 60W: 126 LM/W

MECHANICAL

- Round flat bulkhead design
- Cast aluminum construction
- Durable powder coat finish
- Finish: Bronze
- Rubber seal and PC lens for wet-location performance
- IP65 rated for wet-location use
- Conduit installation available
- Four-direction wiring access
- Safety rope included
- Dimensions: 11-7/8" Dia. x 4-1/16" D

APPLICATIONS:

- Residential entrances, apartment corridors, stairwells, walkways, porches, and commercial exterior wall-mounted lighting.

Phone/Fax: (877) 805-2252
www.westgatemfg.com

PHOTOMETRICS

BUG rating

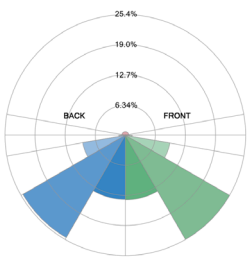

Rating: B2 U2 G2		
Forward Light		
Low (0-30°)	853.5	13.6%
Medium (30-60°)	1590	25.4%
High (60-80°)	598.4	9.54%
Very High (80-90°)	90.31	1.44%
Back Light		
Low (0-30°)	848.1	13.5%
Medium (30-60°)	1562	24.9%
High (60-80°)	571.9	9.12%
Very High (80-90°)	82.67	1.32%
Uplight		
Low (90-100°)	28.28	0.451%
High (100-180°)	46.47	0.741%
Total		
Sum	6271	100%

IESNA TM-15-07 Luminaire Classification System For Outdoor Luminaires

Iso-illuminance plot

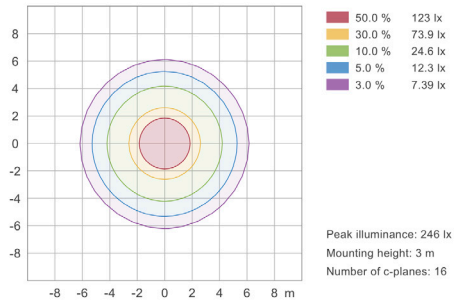

BUG Rating: B2-U2-G2 Area 24'x24' Mounting Height: 9'

PERFORMANCE TABLE

MODEL NO.	WATTAGE	LUMEN	COLOR TEMP.	LPW	BUG
BKR-36W-MCTP-6OW-P-BR BKR-36W-MCTP-6OW-P-BK BKR-36W-MCTP-6OW-P-WH	36W 48W 60W	3816 5088 6360	3000K 4000K 5000K	106	B2-U2-G2

ACCESSORIES

MODEL NO.	DESCRIPTION	IMAGE	DRAWING
BKR-36W-TRIM1-6OW-BR	• Cross-style replacement trim for BKR 14" round flat bulkhead fixtures • Finish: Bronze • Field-replaceable accessory for changing fixture appearance • Compatible with BKR-36W-MCTP-60W-P series fixtures	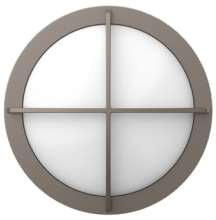	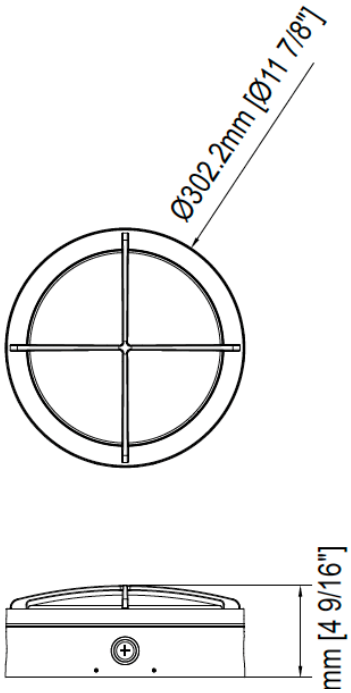
BKR-36W-TRIM1-6OW-BK	• Cross-style replacement trim for BKR 14" round flat bulkhead fixtures • Finish: Black • Field-replaceable accessory for changing fixture appearance • Compatible with BKR-36W-MCTP-60W-P series fixtures	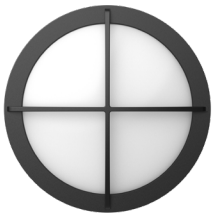	
BKR-36W-TRIM1-6OW-WH	• Cross-style replacement trim for BKR 14" round flat bulkhead fixtures • Finish: White • Field-replaceable accessory for changing fixture appearance • Compatible with BKR-36W-MCTP-60W-P series fixtures	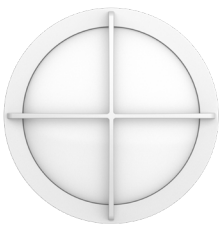	

Technical Drawing: 11 7/8" (D) x 4 9/16" (H)

ACCESSORIES

MODEL NO.	DESCRIPTION	IMAGE	DRAWING
BKR-36W-TRIM2-6OW-BR	• Eyelid-style replacement trim for BKR 14" round flat bulkhead fixtures • Finish: Bronze • Field-replaceable accessory for changing fixture appearance • Compatible with BKR-36W-MCTP-60W-P series fixtures	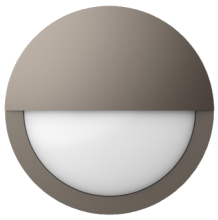	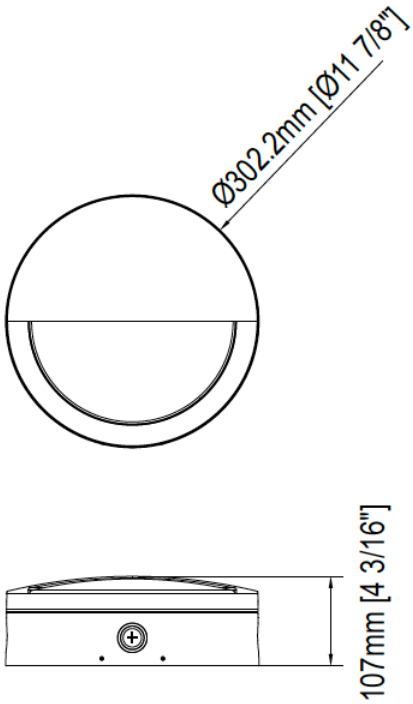 Technical Drawing: 11 7/8" (D) x 4 3/16" (H)
BKR-36W-TRIM2-6OW-BK	• Eyelid-style replacement trim for BKR 14" round flat bulkhead fixtures • Finish: Black • Field-replaceable accessory for changing fixture appearance • Compatible with BKR-36W-MCTP-60W-P series fixtures	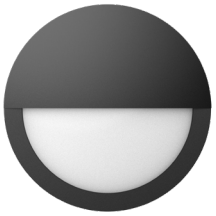	
BKR-36W-TRIM2-6OW-WH	• Eyelid-style replacement trim for BKR 14" round flat bulkhead fixtures • Finish: White • Field-replaceable accessory for changing fixture appearance • Compatible with BKR-36W-MCTP-60W-P series fixtures	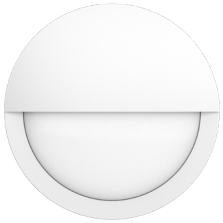	

MODEL NO.	DESCRIPTION	IMAGE	DRAWING
BKR-36W-TRIM3-6OW-BR	• Cage-style replacement trim for BKR 14" round flat bulkhead fixtures • Finish: Bronze • Field-replaceable accessory for changing fixture appearance • Compatible with BKR-36W-MCTP-60W-P series fixtures	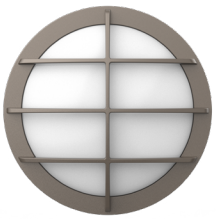	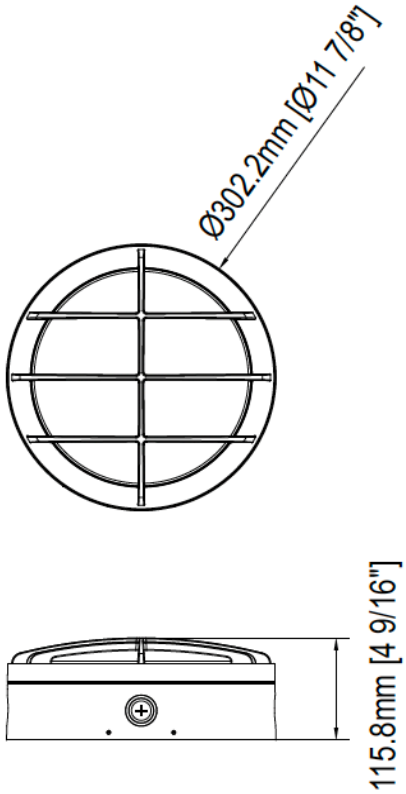 Technical Drawing: 11 7/8" (D) x 4 9/16" (H)
BKR-36W-TRIM3-6OW-BK	• Cage-style replacement trim for BKR 14" round flat bulkhead fixtures • Finish: Black • Field-replaceable accessory for changing fixture appearance • Compatible with BKR-36W-MCTP-60W-P series fixtures	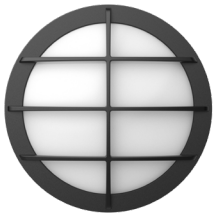	
BKR-36W-TRIM3-6OW-WH	• Cage-style replacement trim for BKR 14" round flat bulkhead fixtures • Finish: White • Field-replaceable accessory for changing fixture appearance • Compatible with BKR-36W-MCTP-60W-P series fixtures	