AD SERIES OUTDOOR LIGHTING

WESTGATE
THE FUTURE IS HERE...AND IT'S QUITE BRIGHT!

AD-018-RGBWW-BT-ORB
12V 7W LED NEW GENERATION ALUMINUM SPOT LIGHT

Customer Name:
Project Name:
Note: | Type:



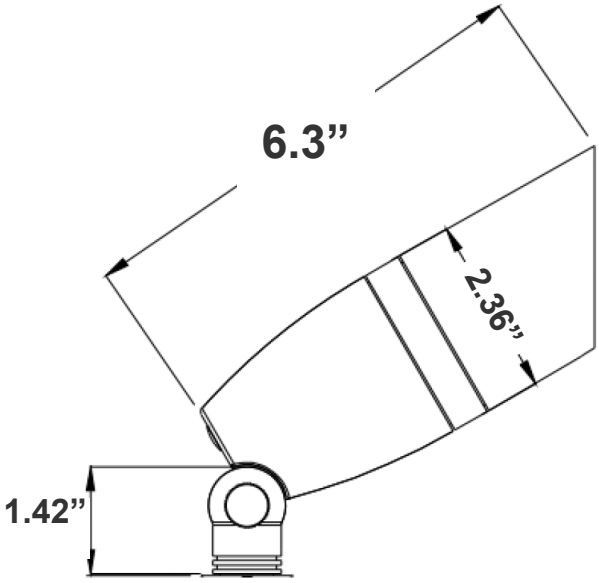

6.3”(L) X 2.36”(D) X 1.42”(W)

The 12V 7W LED New Generation Aluminum Spot Light is a high-performance outdoor lighting solution designed for energy efficiency and durability. Featuring a robust aluminum housing, it provides focused, high-lumen illumination ideal for accenting landscapes, architectural details, and outdoor spaces. This low-voltage fixture ensures reliable performance with minimal energy consumption, offering long-lasting brightness while reducing maintenance. Perfect for residential and commercial applications, its compact design blends seamlessly into any environment while delivering superior lighting quality.

Features

- Die-cast Aluminum Housing with Powder Coat Finish
- 1/2” Threaded Knuckle Stem
- 7-Year Warranty
- Lens: Flat Glass Lens

Technical Specifications

Electrical:

- Voltage: 12V
- Power Factor: >0.92
- Wattage: 7W
- Efficacy: 85 LPW
- Bluetooth Connection Range: Approximately 30 feet(10 meters). Maximum Communication Range Will Vary Depending On Obstacles (Person, Metal, Wall, etc.) Or Electromagnetic Environment.

Lighting:

- Integrated LED
- Lens: Flat Glass Lens
- Total Lumens: 600 LM
- Color Temperatures: RGBW Selectable Through Phone App
- Color Rendering Index: CRI ≥ 80
- Beam Angle: 90°

Mechanical:

- This Fixture is Bluetooth mesh Enabled. Bluetooth Mesh Networking Enables Many-to-many (m:m) Device Communications And is Optimized For Creating Large-Scale Device Networks. It Is Ideally Suited For Control Monitoring And Automation Solutions That Require Tens, Hundreds or Thousands Of Devices To Communicate With One Another
- Die-cast Aluminum Housing with Powder Coat Finish
- Finish: Black or Oil-Rubbed Bronze or Brass Simulation
- 2FT. STP-2 18AWG lead wire
- 8-1/2” Non-metallic Spike
- Silicon-filled Wire Nuts
- Rotatable Shroud with Set Screw
- Operating Temperature: -40°F to 104°F
- IP65 Suitable for Wet Locations
- 7-Year Warranty

Applications:

- The 12V 7W LED New Generation Aluminum Spot Light is ideal for landscape lighting, architectural accents, signage illumination, and security lighting. It provides energy-efficient, focused illumination for residential and commercial outdoor spaces, enhancing aesthetics, safety, and visibility.

Phone: (877) 805-2252 | Fax: (877) 805-2252
www.westgatemfg.com |

WG-10182024

Photometrics: AD-018-RGBWW-BT-ORB

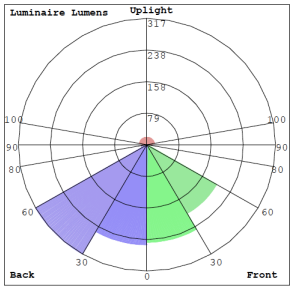

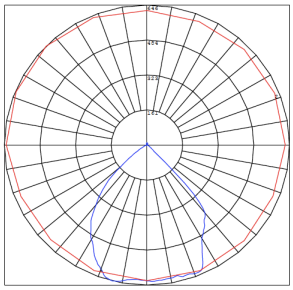

BUG Rating: B1-U2-G0

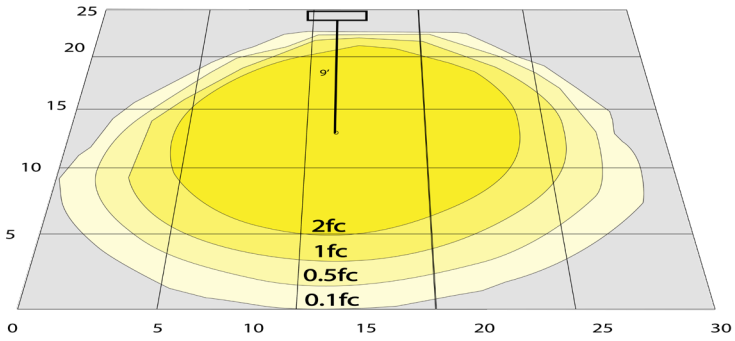

Area 25'x 30' Mounting Height: 9'

Other Views:



Side View



Front View

Performance Table: AD-018-RGBWW-BT-ORB

MODEL NO.	Wattage	Voltage	Lumens	Color Temp.	BUG Rating	LPW
AD-018-RGBWW-BT-ORB	12W	12V	600LM	RGBWW	B1-U2-G0	85

Sample Ordering

Model		Volt		Color Temp.	Push Button		Color
AD	-	018	-	RGBWW	-	BT	- ORB

ACCESSORIES:



Silicon-filled Wire Nuts



2ft. SPT-2 18AWG Lead Wire



8-1/2" Non-metallic Spike

works with the Google Assistant

WESTGATE
Westgate Smart
Download the Smart life App
Download on the App Store
GET IT ON Google Play

WORKS WITH amazon alexa

- For Setting Up The Light(s), Initial Internet Connection or Mobile Data Is Required.
- After the Initial Setup, Internet Connection is not Necessary Anymore. The lights Can Be Controlled with The Mobile App on The Phone or Tablet. Features Such as Dimming, Changing Colors, Lights Scenes, etc.
- Scheduling Feature Requires Internet Connection.
- Bluetooth Devices Need a Gateway (Sold Separately) In Order to Connect to WiFi Network (Internet)

WESTGATE

Phone: (877) 805-2252 | Fax: (877) 805-2252
www.westgatemfg.com |