AA SERIES Landscape Lighting

WESTGATE
THE FUTURE IS HERE...AND IT'S QUITE BRIGHT!

AA-46L-ORB
AA-STEM-22-MCT-ORB

AA-46L-BK
AA-STEM-22-MCT-BK

AA SERIES NEW GENERATION OF PATH LIGHTS

MCT Multi Color Temperature (Selectable)

Customer Name:

Project Name:

Note: | Type:



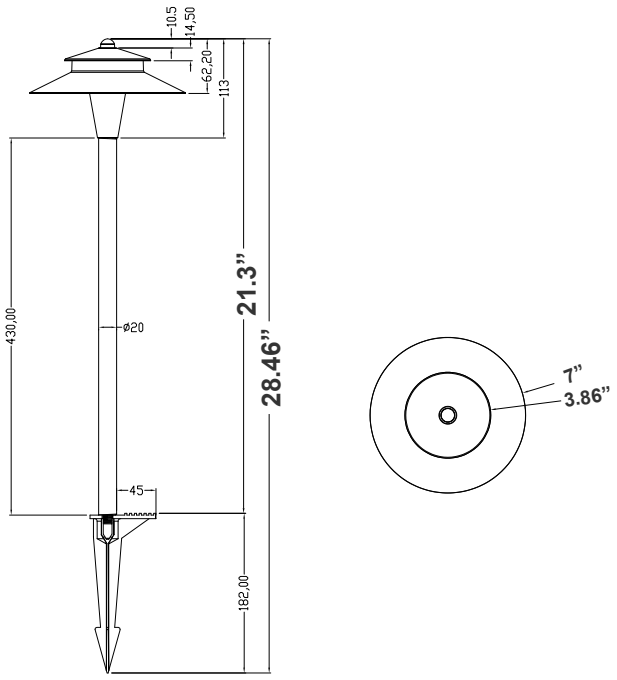

3.86"(D) x 28.46"(H)

New Generation of Integrated LED Path Lights,Selectable Color Temperature Or Push-Button RGBWW With Scenes, App-Controlled RGBW In 3 Finishes, Simulated Antique Brass, Black, and Metallic Oil-Rubbed Bronze. 2 Different Heights: 15" Or 22" Stems And Caps Are Sold Separately

Features

- Die-Cast Aluminum
- Polycarbonate Lens
- Model 46 Aluminum Path Light Cap
- 22" 3CCT LED Path Light Stem

Technical Specifications

Electrical:

- Voltage: 12-24V AC
- Wattage: 5W
- Power Factor: >0.90
- Efficacy: 66.7 LPW

Mechanical:

- Die-Cast Aluminum
- 8-1/2" PC Spike Included
- 1/2" Threaded Knuckle Stem
- Color: Oil-Rubbed Bronze, Black and Antique Brass
- Polycarbonate Lens
- Operating Temperature: -4ºF to 104ºF
- 1-Year Warranty
- Suitable for Wet location

Lighting:

- Multi CCT Switch Is On Top Of The Stem
- Total Lumens: 200LM
- Color Temperatures: 3000K/4000K/5000K
- Color Rendering Index: CRI ≥ 80
- Rated life: 30,000 Hrs

Applications:

New Generation of Integrated LED Path Lights, Selectable Color Temperature Or Push-Button RGBWW With Scenes, App-Controlled RGBW In 3 Finishes, Simulated Antique Brass, Black, and Metallic Oil-Rubbed Bronze. 2 Different Heights: 15" Or 22" Stems And Caps Are Sold Separately

Phone: (877) 805-2252 | Fax: (877) 805-2252
www.westgatemfg.com

Oil-Rubbed Bronze:



AA-46L-ORB
Model 18 Aluminum Path Light Cap

+



AA-STEM-22-MCT-ORB
22” 3CCT LED Path Light Stem

=



AA-46L-ORB
+
AA-STEM-22-MCT-ORB

Black:



AA-46L-BK
Model 18 Aluminum Path Light Cap

+



AA-STEM-22-MCT-BK
22” 3CCT LED Path Light Stem

=



AA-46L-BK
+
AA-STEM-22-MCT-BK

Performance Table: AA-46L + AA-STEM-22-MCT

MODEL NO.	Wattage	Voltage	Lumens	Color Temp.	LPW
AA-46L-ORB+AA-STEM-22-MCT-ORB AA-46L-BK+AA-STEM-22-MCT-BK	5W	12-24V	200LM	3000K 4000K 5000K	66.7

Accessories:

Blank = No Option For Accessories
LSWN1 = Bag of 24, Waterproof Wire Connectors, For Up to Two 14-2 + One 16-2 Cables
LSWN2 = Box of 24, Waterproof Wire Connectors, For Up to Three 12-2 Cables
LSWN2-100 = Jar of 100, Waterproof Wire Connectors, For Up To Three 12-2 Cables

ACCESSORIES:



LSWN2-100
Jar of 100, Waterproof wire connectors, for up to three 12-2 cables



LSWN1
Bag of 24, Waterproof wire connectors, for up to two 14-2 + one 16-2 cables



LSWN2
Box of 24, Waterproof wire connectors, for up to three 12-2 cables