⚠Warnings

- To avoid the risk of fire, explosion, or electric shock, this product should be installed, inspect, and maintained by a qualified electrician only, in accordance with all applicable electrical codes.
- Be certain electrical power is OFF before and during installation and maintenance.
- Luminaire must be connected to a wiring system with an equipment-grounding conductor.
- The product must be installed in accordance with the applicable installation code by a person familiar with the construction and operation of the product and the hazards involved.
- Min 90 °C supply conductors
- Caulk to mounting surface at all sides
- Do not install where the marked operating temperatures exceed the ignition temperature of the hazardous atmosphere.
- Do not operate in ambient temperatures above those indicated on the luminaire nameplate.

Fixture Performance

Item	Current MAX.	Voltage	Wattage	CCT	Optic Type
LFX-SM-10-30W-MCTP-YY-ZZ-P	0.37A	100-277V AC 50/60Hz	10/20/30W adjustable	3000K 4000K 5000K CCT adjustable	90°*120°
LFX-MD-30W-50W-MCTP-YY-ZZ-P	0.72A		30/40/50W adjustable		

Model description :
YY=mounting option (TR, KN)
ZZ=housing color (Blank=Bronze, WH=White, BK=Black, SV=Silvery）

Installation Steps:

Like traditional HID lighting, there are two different installation methods for 30 and 50W, suitable for various occasions. Kindly please refer to the following figure when installing the fixture.

- Use 100-277V, 50/60Hz AC supply.
- Suitable for using in the following locations:
  - Ambient Temp: -40~+40°C
  - Wet Locations

Note: Save these instructions for future reference.



I. Knuckle mount

1. Take the lamp out of the box and screw it into the mounting base. See Fig.1.
2. After the lamp is installed on the mounting base, fix the mounting base to the ground with screws. See Fig.2.
3. Wiring connection:

Connect wires into wiring terminal: White to white, black to black, and green wire to “Ground” terminal. See Fig. 6.

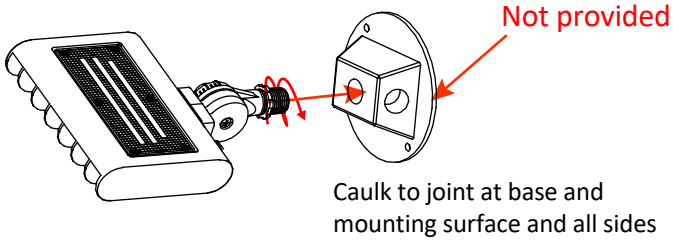

Fig.1

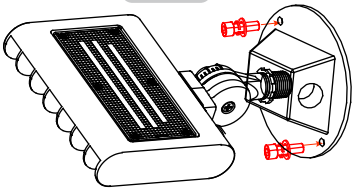

Fig.2

II. Yoke mount

1. Take out the lamp from the outer box. See Fig.3.
2. Fix the bracket to the ground with screws. See Fig.4.
3. Wiring connection:

Connect wires into wiring terminal: White to white, black to black, and green wire to “Ground” terminal. See Fig. 6.

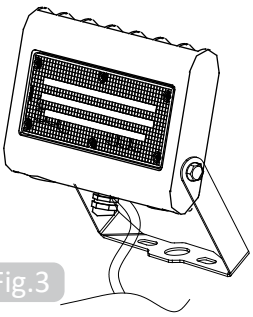

Fig.3

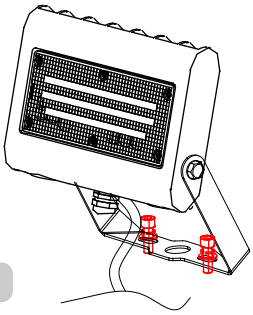

Fig.4

Connect supply cord of luminaire to branch with suitable Listed water proof strain relief connector and outlet box cover.

IV.Function description

The luminaire is designed to be wattage and CCT tunable, please take the cover off before using the Watt and CCT selectable function.

Please slide the DIP switch to select the corresponding Watt and CCT according to the labels shown in Figure 5.

If the Photocell function is needed, please slide the dial to the “ON” position.

After completing adjustments, please securely fasten the cover to prevent water ingress.

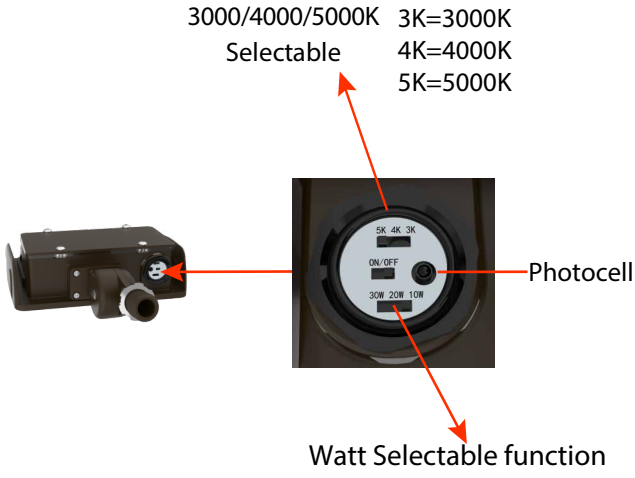

Fig.5

Wiring Diagrams:

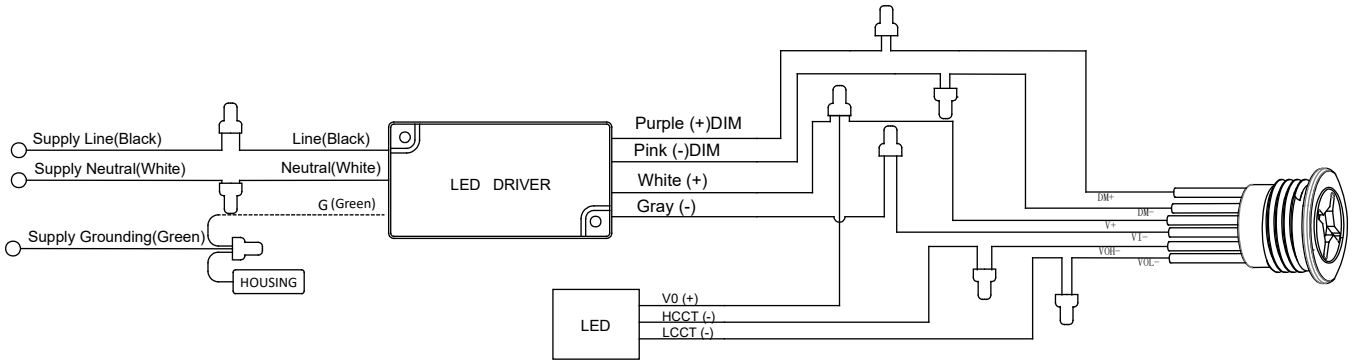

Fig.6

After installation, please:

- Check whether the lighting fixture is firmly fixed.
- Check whether wires are connected correctly.
- At last, turn on the power, and check if the lighting fixture works well. If not, please turn off the power and contact your sales representative.