95STS Series Single Model	Typical	Peak	RO	Max Flow To Drain	Pipe Size		Media	Mineral Tank		Installation			Shipping Weight	Operating Weight
	Maximum Recommended Service Flow Rates				Service	Drain	Per Tank	Diameter	Height	Height	Depth	Width		
	USGPM	USGPM	USGPM	USGPM	in	in	ft3	in	in	in	in	in	lbs	lbs
	l/s	l/s	l/s	l/s	mm	mm	m3	mm	mm	mm	mm	mm	kg	kg
95STS NX14- 1.5"	10	15	8	12	1"	1"	2.75	14	66	81	20	20	384	784
	0.63	0.95	0.50	0.76	25	25	0.08	356	1676	2057	508	508	174	356
95STS NX16- 1.5"	14	20	11	15	1"	1"	3.5	16	66	81	22	22	485	985
	0.88	1.26	0.69	0.95	25	25	0.10	406	1676	2057	559	559	220	447
95STS NX18- 1.5"	17	26	13	20	1"	1"	4.5	18	68	83	24	24	574	1,174
	1.07	1.64	0.82	1.26	25	25	0.13	457	1727	2108	610	610	260	533

Typical service based on 10 usgpm/ft2 Peak based on 15 usgpm/ft2 Flowrates may change depending upon actual feed water quality water conditions.
Backwash flowrates based on cold water. If regeneration feed water is above 450F, The backwash flow rate will have to be increased.

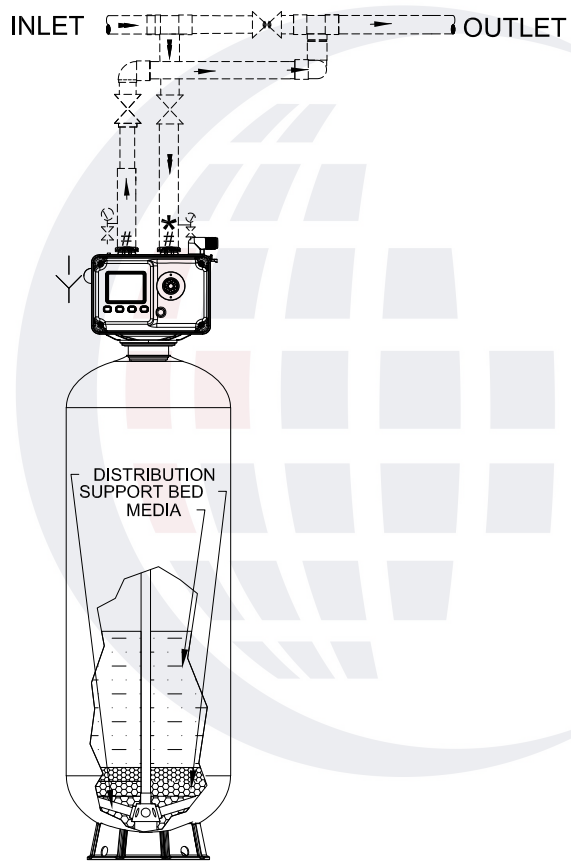

RAW WATER REGENERATION PIPING SHOWN

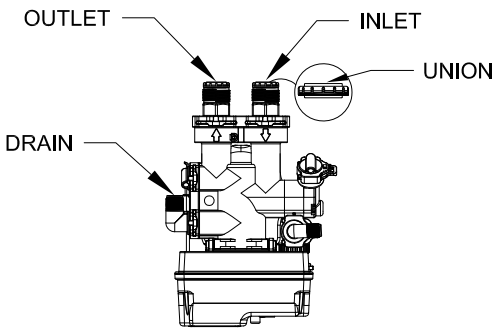

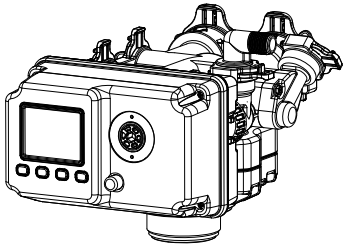

LEGEND:

- ISOLATION VALVE
- BYPASS VALVE
- PRESSURE GAUGE & SAMPLE POINT
- OPEN DRAIN
- VACUUM BREAKER
- # FLEX CONNECTOR
- RAW WATER LINES
- FILTERED/SOFTENED WATER LINES
- WATER TO OPEN DRAIN
- TREATED WATER LINES
- ELECTRONIC BALL VALVE
- UNION OR FLANGE

NOTES

- SINGLE FILTER, CALENDAR CLOCK INITIATED
- FILTER IS EQUIPPED WITH 1.5" VALVE ELECTRONIC BALL VALVE
- MAXIMUM RECOMMENDED SYSTEM PRESSURE IS 100 PSI (690 kPa) AND MINIMUM INLET PRESSURE IS 40 PSI.
- MAXIMUM RECOMMENDED SYSTEM TEMPERATURE IS 100 °F (38 °C).
- REQUIRES 120 VOLT, 1 PHASE, 60 Hz ELECTRICAL POWER.
- ALL EXTERNAL PIPING, FITTINGS, AND VALVES SHOWN BY BROKEN LINES ARE SUPPLIED BY OTHERS.
- MINERAL TANKS AND MEDIA ARE NSF APPROVED.
- DUE TO SLIGHT EXPANSION AND CONTRACTION OF MINERAL TANK, PIPING MUST BE DESIGNED TO ALLOW SOME MOVEMENT. AS WELL AS BE PROTECTED FROM VACUUM. FLEX CONNECTORS AND A VACUUM BREAKER MAY BE REQUIRED. FAILURE TO INSTALL EITHER OF THEM OR IMPROPERLY INSTALL THEM MAY VOID THE WARRANTY.
- AVAILABLE IN 1", 1.25", 1.5" PIPING CONNECTION.
- FLOOR DRAINS MUST BE SIZED TO CARRY THE MAX. LISTED FLOW TO DRAIN.
- REFER TO THE INSTALLATION AND OPERATION MANUAL FOR FURTHER DETAILS.
- USE PROPER UNION OR FLANGE FOR THE PIPE CONNECTION TO VALVE FOR EASY MAINTENANCE.
- SYSTEM MUST BE INSTALLED TO COMPLY WITH ALL FEDERAL, STATE, PROVINCIAL, & LOCAL CODES.
- MEDIA BED CONSISTS OF NSF APPROVED, NEXTSAND ON A GRADED SUPPORT BED

Canature WaterGroup
Commercial/Industrial Engineering Division

95STS NEXTSAND FILTER
1.5" SINGLE SYSTEM

THIS DOCUMENT CONTAINS INFORMATION WHICH IS PROPRIETARY TO CANATURE WATERGROUP. THE REPRODUCTION, TRANSFER, OR OTHER EXPLOITATION OF ANY INFORMATION CONTAINED HEREIN IS NOT PERMITTED WITHOUT PRIOR WRITTEN APPROVAL OF CANATURE WATERGROUP. THE MANUFACTURER RESERVES THE RIGHT TO MAKE PRODUCT REVISIONS, WHICH MAY DEVIATE FROM THE SPECIFICATIONS AND DESCRIPTIONS STATED HEREIN WITHOUT OBLIGATION TO CHANGE PREVIOUSLY MANUFACTURED PRODUCTS OR TO NOTE THE CHANGE. NOT DRAWN TO THE SCALE UNLESS OTHERWISE SPECIFIED.

Project:	Date:	Rev
	Dwg# 95STS NX1.5S	0