SET UP SHEET

COUGAR LD2

Driver:	Michal Orlowski	**Date:**	December 2022	**Event/Track:**	US Carpet Offroad Championships
Qualify:	1st	**Final:**	1st	**Best Lap:**	13.1

TRACK TYPE

Grip Level	High ☐ Medium ☒ Low ☐
Type	Tight ☒ Open ☐ Mixed ☐
Condition	Flat ☒ Bumpy ☐ Mixed ☐
Surface	Clay ☐ Long Astro ☐ Carpet ☒ Grass ☐ Short Astro ☐ Mixed ☐
Weather	20°C

TYRES

	FRONT	REAR
Tyres	JC Fuzzbites	JC Fuzzbites
Wheels	JC	JC
Inserts	-	JC 4WD front

Notes:

glue on the side wall just below the pin
rear tyres sad face
front tyres sad face

Notes:

Schumacher chassis skin

FRONT SUSPENSION

KEY: **P** = Plastic, **A** = Alloy, **B** = Brass, **CF** = Carbon Fibre, **S2** = Schumacher Composite, **M** = Medium, **S** = Stiff, **Sh** = Short, **H** = High, **L** = Low, **F** = Front, **R** = Rear, **Y** = Yes, **N** = No

Ride Height	13.5 mm
Wheelbase	0 ☐ +1.5 ☐ +3.0 ☐ +4.5 ☒
Toe	1 deg In ☐ Out ☒
Camber at Ride Height	-1 deg
Anti Roll Bar	0.9 ☐ 1.0 ☐ 1.1 ☐ 1.2 ☐
Front Wing	Y ☒ N ☐
Hub Height	H ☒ M ☐ L ☐
Bump Steer Washers	2 mm
Pivot Block Height	H ☐ M ☐ L ☒

Notes:

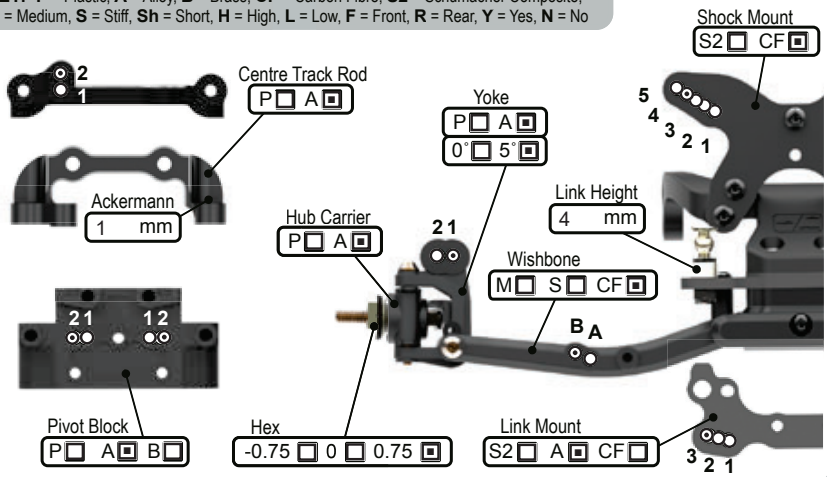

REAR SUSPENSION

KEY: **P** = Plastic, **A** = Alloy, **B** = Brass, **CF** = Carbon Fibre, **S2** = Schumacher Composite, **M** = Medium, **S** = Stiff, **Sh** = Short, **H** = High, **L** = Low, **F** = Front, **R** = Rear, **Y** = Yes, **N** = No

Ride Height	13.5 mm
Wheelbase	Sh ☐ M ☒ L ☐
Anti-Squat	1° ☒ 2° ☐ 3° ☐ 4° ☐
Toe	4° ☐ 3.5° ☐ 3° ☐ 2.5° ☐ 2° ☒ 1.5° ☐ 1.0° ☐ 0.5° ☐
Camber at Ride Height	-2 deg
Anti Roll Bar	1.0 ☐ 1.1 ☐ 1.2 ☒ 1.3 ☐ 1.4 ☐
Wing Gurney Height	JC 6.5in mm
Rearward Shock Position Only	A ☐ B ☐
Driveshaft Type	CVD ☐ U/J ☒

Notes:

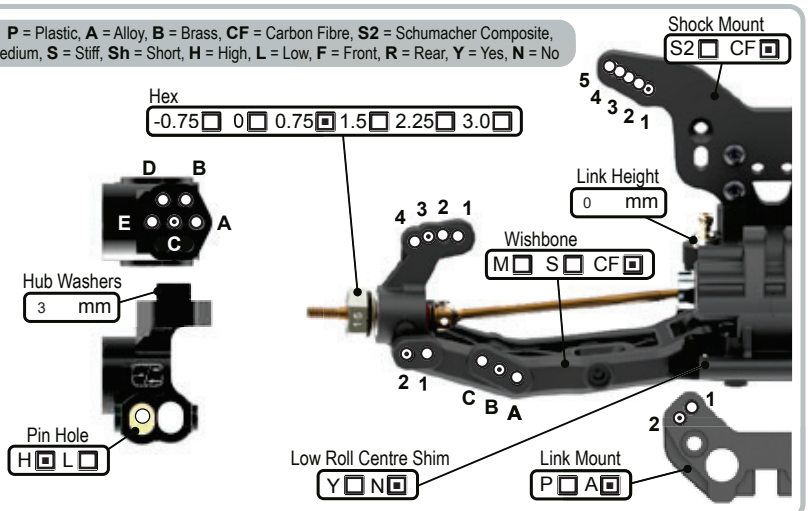

TRANSMISSION

Diff Height	H ☒ M ☐ L ☐
Diff Oil	10k cSt
Diff Type	B ☐ 2g ☐ 4g ☒
Motor	Hobbywing 4.5t
Rotor Dia.	12.5 mm
Timing	30 deg
Pinion	20 t
Spur	80 t
Motor Plate	A ☒ CF ☐
Lock Out	Y ☐ N ☒
Slipper Plates	2 ☐ 3 ☒

CHASSIS

Chassis	A ☒ C/F ☐
Side Pods	S ☐ C/F ☒
Chassis Insert	0mm ☒ +5mm ☐
LiPo Position	1 ☐ 2 ☐ 3 ☐ 4 ☐ 5 ☐ 6 ☐ 7 ☐ 8 ☒
X Brace	Y ☐ N ☒
Running Weight	1474 g
Radio Tray	1 ☒ 2 ☐ 3 ☐

Notes:

EQUIPMENT

E.S.C.	Hobbywing G2S
Servo	POWERHD S15
RX	SANWA RX-492
LiPo	Sunpadow 4000mAh
Bodyshell	JC S2

WEIGHTS

Chassis	F ☒ R ☐
Rear Strap	F ☐ R ☐
Radio Tray	Y ☒ N ☐
Under LiPo	Y ☐ N ☒

SHOCKS

KEY: **i** = Internal, **e** = External, **V** = Vented, **S** = Sealed, **A** = Aeration

	FRONT	REAR
Cap	V ☐ S ☐ A ☒	V ☐ S ☐ A ☒
Body	KASHIMA	KASHIMA
Oil	650 cSt	525 cSt
Piston	3x1.5mm	3x1.6mm
Spring	orange hr lb/in	black hr lb/in
Limiters (i)	0 mm	0 mm
Stroke	20.5 mm	27.8 mm
Limiters (e)	0 mm	0 mm

Notes: