SET-UP SHEET

VER.01 ©XRAY

XRAY X4'22

RACE	Dutch Nationals Round 5
TRACK	M.A.C De Baanbrekers
NAME	Roel Jongenelis
DATE	28-08-2022

TRACK TEMPERATURE	QUAL POSITION	FINAL POSITION	BEST LAPTIME	LAPS	TIME
26-38	1	1	15.684 /sec	26 /	7:00.313

TRACK

TRACK SURFACE	☐ CARPET	☒ ASPHALT	
TRACK LAYOUT	☐ TECHNICAL	☐ MIXED	☒ FAST
TRACTION	☐ LOW	☒ MEDIUM	☐ HIGH

TRANSMISSION

FRONT	REAR
SOLID AXLE ☒ YES	
GEAR DIFFERENTIAL - OIL /cSt	GEAR DIFFERENTIAL - OIL 10K /cSt
PINION 38 /T	SPUR GEAR 90 /T — FINAL DRIVE RATIO 4.50

SHOCKS

FRONT		REAR
2.5-2.8	XRAY SPRINGS	2.7
450 (HUDY)	OIL /Cst	450 (HUDY)
0	REBOUND %	0
☐ YES ☒ NO	FOAM INSERTS	☐ YES ☒ NO
☐ 3 HOLES ☐ 4 HOLES ☒ PSS	PISTONS: ☐ 1.0mm ☒ 1.1mm ☐ 1.2mm	☐ 3 HOLES ☒ 4 HOLES ☐ PSS
No holes		

SHOCK LENGTH FRONT 9.3 /mm — SHOCK LENGTH REAR 9.3 /mm

ANTI-ROLL BAR

FRONT THICKNESS/mm	REAR THICKNESS/mm
1.3	1,3

TIRES

FRONT		REAR
Matrix 36R	TIRES	Matrix 36R
MR33 V3	ADDITIVE	MR33 V3
10 MIN	ADDITIVE TIMING	10 MIN

FRONT LEFT ☒ — FRONT RIGHT ☒ — TREATED AREA — REAR LEFT ☒ — REAR RIGHT ☒

TOTAL WEIGHT	1330 /g	WEIGHT BALANCE	FRONT 51 %	REAR 49 %	
MOTOR	ORCA 13.5T ETS	TIMING			
ESC	ORCA ETS	BATTERIES	LRP 8100		
BODY	Twister special	WING	STD		

BODY POSITION

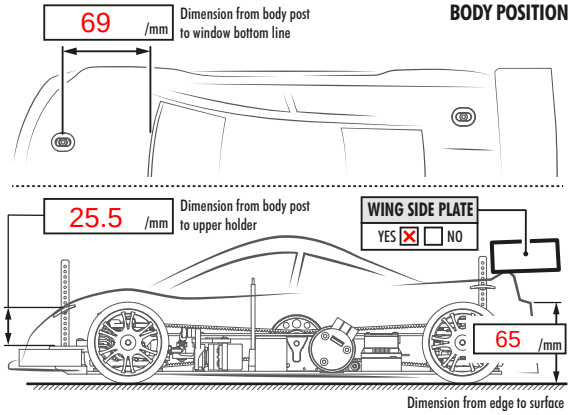

COMMENTS

FRONT & REAR SUSPENSION

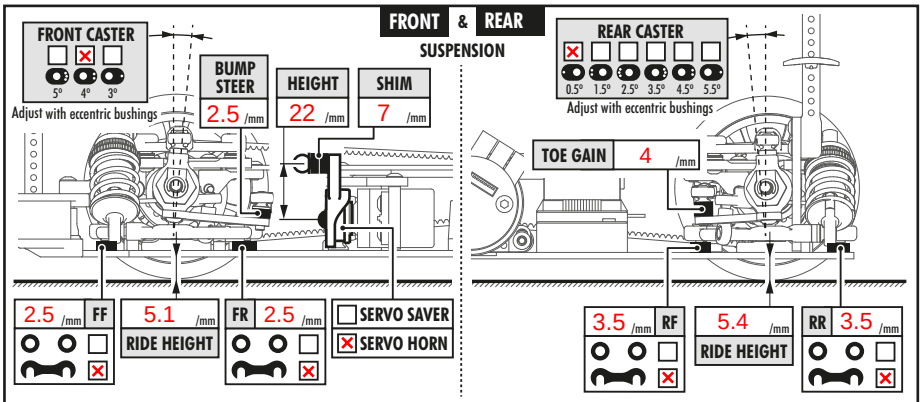

FRONT SUSPENSION

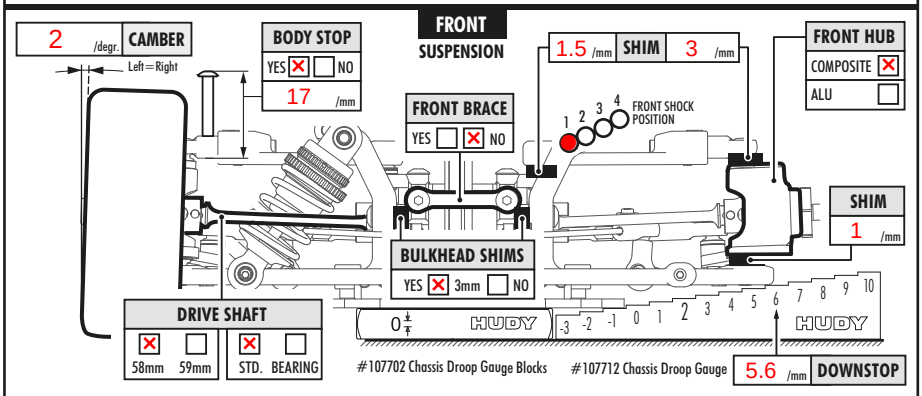

REAR SUSPENSION

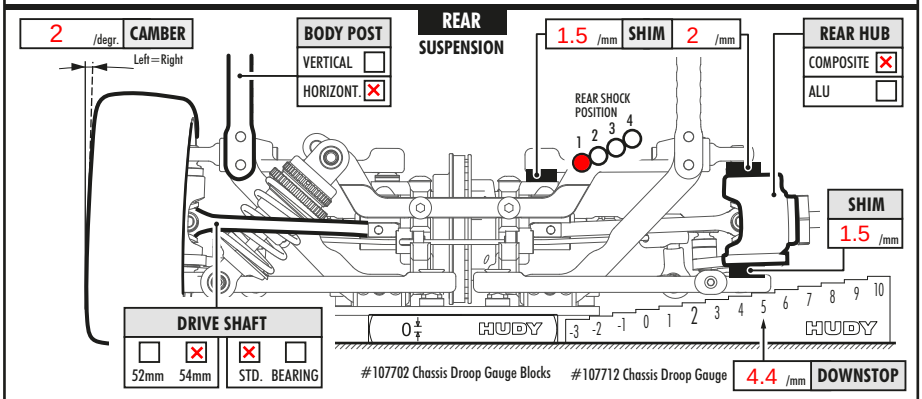

TOP VIEW

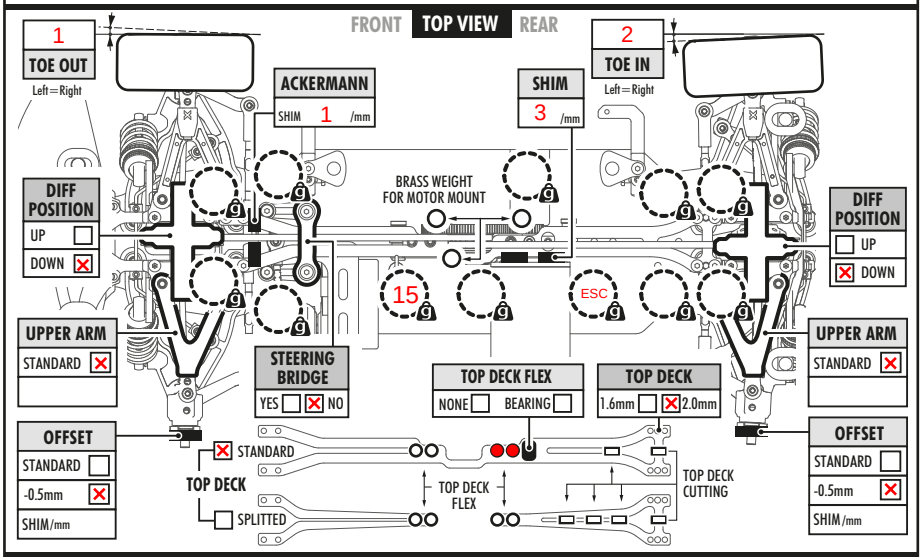

BOTTOM VIEW

