SET-UP SHEET

VER.01 ©XRAY

XRAY X4'22

RACE	ROAR NATS 2022
TRACK	RCCA
NAME	BRANDAN HICKSON
DATE	3/13/22

TRACK TEMPERATURE	QUAL POSITION	FINAL POSITION	BEST LAPTIME	LAPS	TIME
68-72	8	6	11.1X /sec	/	

TRACK

TRACK SURFACE	☐ CARPET	☐ ASPHALT	
TRACK LAYOUT	☐ TECHNICAL	☒ MIXED	☐ FAST
TRACTION	☐ LOW	☐ MEDIUM	☒ HIGH

TRANSMISSION

FRONT		REAR
SOLID AXLE	☐ YES	
GEAR DIFFERENTIAL - OIL	/cSt	GEAR DIFFERENTIAL - OIL 8K /cSt
PINION 51 /T	SPUR GEAR 80 /T	FINAL DRIVE RATIO 2.98

SHOCKS

FRONT		REAR
2.5-2.8	XRAY SPRINGS	2.7
400	OIL /Cst	400
0	REBOUND %	0
☐ YES ☒ NO	FOAM INSERTS	☐ YES ☒ NO
☐ 3 HOLES ☒ 4 HOLES ☐ PSS	PISTONS ☐ 1.0mm ☒ 1.1mm ☐ 1.2mm	☐ 3 HOLES ☒ 4 HOLES ☐ PSS
SHOCK LENGTH FRONT 8.7 /mm		SHOCK LENGTH REAR 8.7 /mm

1.4 THICKNESS/mm	ANTI-ROLL BAR	THICKNESS/mm 1.3

GRAVITY USGT	TIRES	GREY RIM BELTED
SXT 3.0	ADDITIVE	GLUE FRONT 59MM
7MIN	ADDITIVE TIMING	NO CLEAN

TREATED AREA: ☐ FRONT LEFT ☐ FRONT RIGHT ☐ REAR LEFT ☐ REAR RIGHT

TOTAL WEIGHT	1355 /g	WEIGHT BALANCE	FRONT 50 %	REAR 50 %	
MOTOR	USGT	TIMING			
ESC	R1 D3	BATTERIES	MOTIV 6K		
BODY	P1Z	WING	KIT		

BODY POSITION

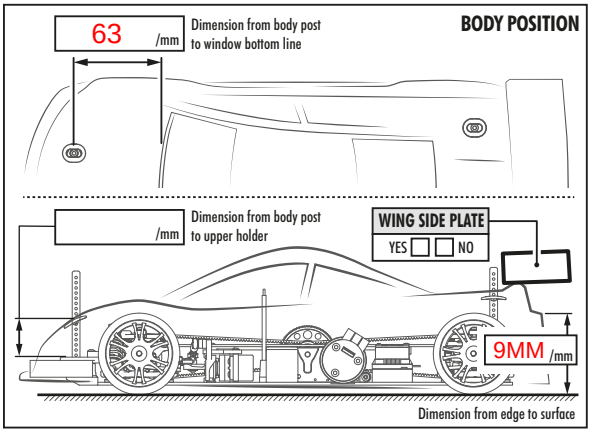

COMMENTS

DROOP OVER RIDE

FRONT & REAR SUSPENSION

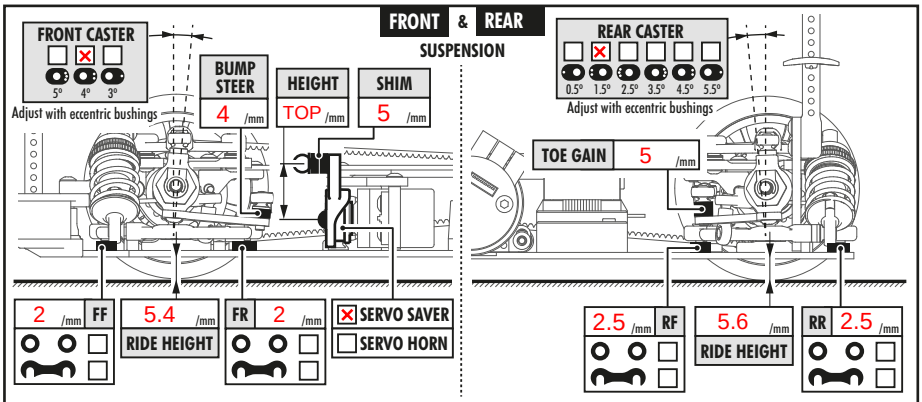

FRONT SUSPENSION

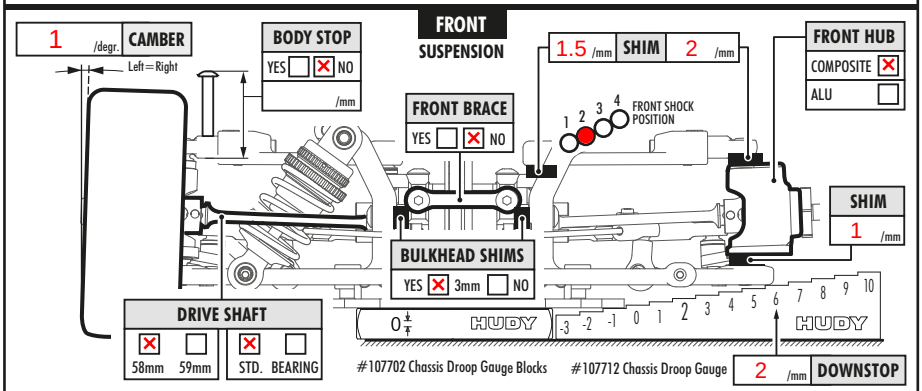

REAR SUSPENSION

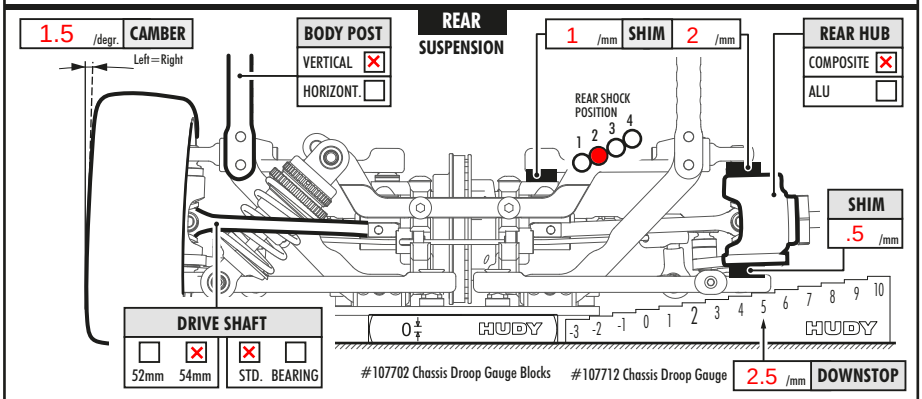

FRONT TOP VIEW REAR

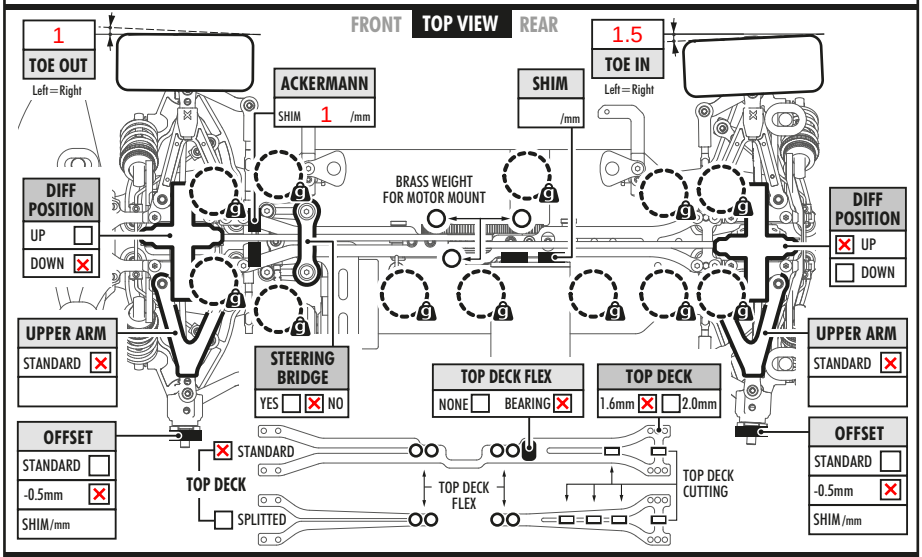

FRONT BOTTOM VIEW REAR

