DIGITAL IMAGE
ASSOCIATES

Computer/Video Playback Services
Practical 24-frame Set Dressing
Content Development/Generation
Stock Footage/Playback Elements

# Sony 53" Rear Projection TV (c2000)



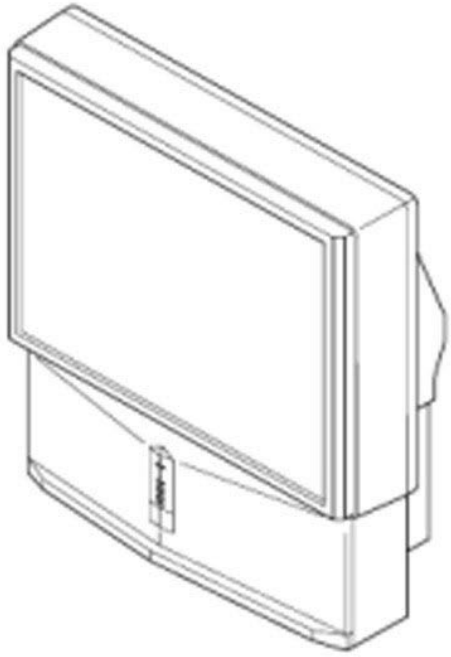

- 4:3 53" Diagonal 3xCRT Rear Projection Console Television, circa 2000
- YUV/VGA/Composite inputs (requires 24fps scan converter and sync-adapters)
- Screen-tested for both 24.00fps Film and 23.98fps Digital Cinema Cameras
- Dimensions (Approx.) : 46.5 x 56 x 25" (WxHxD)
- Weight (Approx.) : 157 lbs.

DIGITAL IMAGE ASSOCIATES 16155 Wyandotte Street, Van Nuys, CA 91406 (818) 908-9119 DIAvfx.com