What's Included

1 x OYB5 Light Fixture

1 x Power Adapter

1 x Power Cord

1 x Barn Door

1 x Yoke

1 x Light Bag

1 x Dual Battery Charger

2 x Batteries

Safety Instructions

1. When using the light, check that the environment is dry and well-ventilated.
2. Do not expose the fixture to rain or moisture.
3. The voltage should not exceed the recommended values.
4. Do not look directly at the light bulbs with naked yes when the light is on.
5. Do not place the light near flammable or volatile solvents such as alcohol or gasoline.
6. Please disconnect the power if the light not used for an extended period of time
7. If the light fixture is not working normally, please contact Ikan. The product should be only be repaired by a qualified technician.

Please do not dissemble/re-assemble.

Note:The technical data are subject to change without notice.

ONYX Series LED User Guide



OYB5

Product Information

Thank you for buying the Onyx 5 Bi-Color Aluminum LED Light from Ikan. Please carefully read the guide before operating the product.

The Onyx Half x 1 Bi-Color Aluminum LED light is fitted with 900 high quality LED lights. The aviation grade aluminum panel design allows for better heat ventilation. The OYB5 provides a flicker-free experience when adjusting the brightness (10%-99%) and color temperature (3200K-5600K). The OYB5 can be controlled remotely with either the included remote control or DMX via the Ethernet port. Having the option of being powered either by the power adapter or two Sony “L” style batteries, the OYB5 can meet both your studio or on the field needs.

Specifications

Model	OYB5
Output Power	54W
Luminous Flux	6480 LM
LED Quantity	900
Color Temperature	3200K - 5600K
Color Rendering Index	≥ 95
Dimmer	10% - 99%
Remote Control	99 Channels 2.4G Wireless Remote Control
Remote Control Distance	150 feet
DMX512	Yes (Ethernet interface)
Battery Type	Sony "L" Style Batteries
DC Power Input	DC13-19V
Fixture Size	14.5 x 11 x 1.75 in.
Fixture Weight	4 lbs

Overview

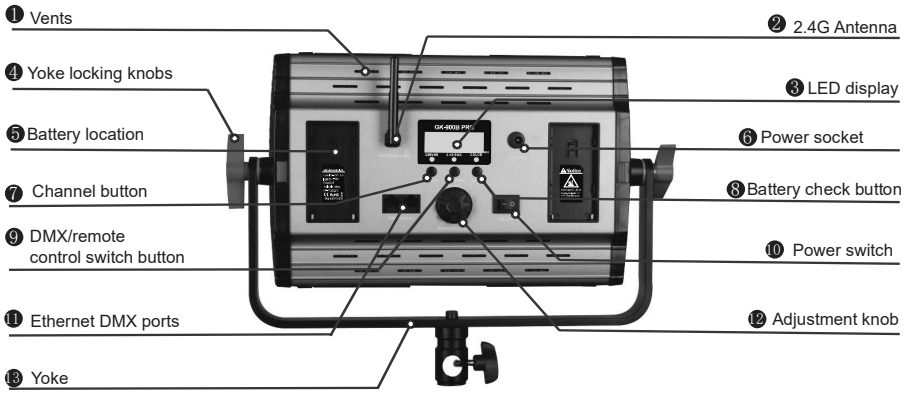

❶ Vents

❷ 2.4G Antenna

❸ LED display

❹ Yoke locking knobs

❺ Battery location

❻ Power socket

❼ Channel button

Press the "CHANNEL" button to toggle the option for the knob adjust the wireless or DMX512 channels.

❽ Battery check button

Press the “Battery” button to view the battery life remaining in batteries. (Only when batteries are in use)

❾ DMX/remote control switch button

When the "DMX" corresponding indicator light is on only DMX controller can be controlled.
When the "2.4G" corresponding indicator light is on either the 2.4 G remote control or manual control can be used.

❿ Power switch

⓫ DMX socket

RJ45 interface connection, can support the DMX512.

⓬ Adjustment knob

Press "DIMMER/COLOR", when the “DIMMER” light is on, the adjustment knob increases or decreases the brightness.
When the “COLOR” light is on, the adjustment knob increases or decreases the color temperature.

Full Power Mode

Press the "DIMMER/COLOR" button twice to enter full power under 4400K color temperature model, the adjustment knob to adjust the brightness 10 ~ 99%.