MODEL 676 CARDIOID MICROPHONE



DESCRIPTION AND APPLICATIONS

A dynamic cardioid microphone, the Model 676 is designed for public address, recording, and communications uses. It provides a sophisticated version of the well-known Electro-Voice Variable-D* principle, Continuously Variable-D™ (CV-D) which phases out unwanted sound from the back, regardless of frequency. The CV-D principle makes use of a slotted tube, coupled to the back of the 676 diaphragm. The tube's apparent length varies inversely with sound frequency, permitting it to phase out unwanted sound from all portions of the audible spectrum for maximum front-to-back cancellation.

Another important feature of this microphone is its built-in three-position bass tilt-off control which, by means of a slide switch integral with the microphone case, allows selection of flat response or bass attenuation "tilted off" from about 800 cps, with response down either 5 db or 10 db at 100 cps. This feature permits attainment of better average sound levels, greater intelligibility, and improved control over feedback. The center position of the switch provides a flat low-frequency response for small rooms and many recording applications. When the 676 is used as a public address microphone, however, especially in large rooms, the 5 db or 10 db attenuation will be found helpful to overcome unwanted room reverberations. In tape recording use, low-frequency attenuation may or may not be required, depending upon the program material and acoustical environment. Often the bass-tilt feature will be of value, even when recording music, since it permits control over the boomy, over-reverberant characteristic of large rooms and low-frequency noise usually possible only in professional studios.

*U.S. Patent No. 3,115,207

WIRING

The Model 676 may be used at either 150-ohm or high impedance. The desired impedance is easily selected by a simple change made at the cable connector. (Refer to Figure 4) The microphone is supplied wired for high impedance operation unless otherwise specified. Most ordinary public address amplifiers and tape recorders are equipped with high impedance inputs, making the 676 an ideal choice for such units. Use of a microphone having high impedance is not recommended, however, when the cable length exceeds twenty feet. High-impedance cables beyond this length are likely to impair audio quality through loss of high-frequency response, and pick up extraneous noise. Use of the 676 at low impedance (150 ohms) entirely elimates this problem. At this impedance setting literally hundreds of feet of cable may be used with no signal quality loss. The E-V Model 502A transformer may be used to match a low impedance 676 to a high impedance input.

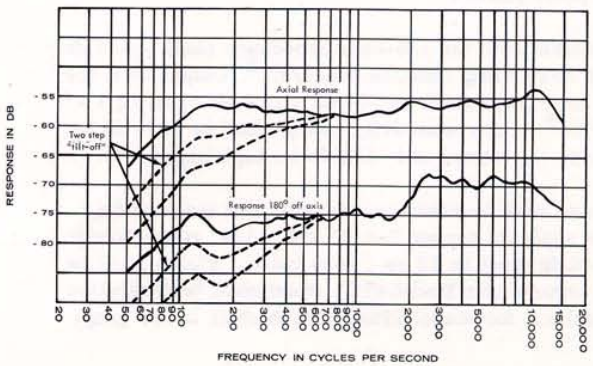

Figure 1 – Frequency Response

SPECIFICATIONS

Generating Element:	Dynamic
Frequency Response:	Uniform, 60 to 15,000 cps (See Figure 1)
Polar Pattern:	Cardioid (See Figure 2)
Impedance:	150 ohms and high impedance, selectable. Microphone is wired for high impedance operation unless 150-ohm impedance is specified. 150-ohm impedance is balanced to ground.
Impedance Selection:	Made at cable connector. To change from high to 150-ohm impedance, move the white lead from Pin 2 to Pin 3 in the 91-MC4M connector.
Output Level:	For 150 ohm impedance: -57 db (1 mw/10 dynes/cm^2) EIA sensitivity rating: -151 db. For high impedance: -57 db (1 v/dyne/cm^2). EIA sensitivity rating: -152 db.
Diaphragm:	Electro-Voice Acoustalloy®
Case Finish:	Pressure-cast zinc alloy satin chrome Available as model 676G in decorative gold finish, or as model 676A in TV gray.
Dimensions:	7-3/8" x 1-1/4" diameter (See Figure 3)
Net Weight:	12 oz., less cable
Cable:	15', 2-conductor, shielded, synthetic rubber jacketed, broadcast type, equipped with 91-MC4M Amphenol connector or equivalent
Accessories Supplied:	Model 300 stand mounting clamp adapts to 5/8"-27 microphone stand.
Optional Accessories:	Model 420 desk stand, Model 376 windscreen
Warranty:	The Electro-Voice Model 676 microphone is guaranteed against defects in workmanship and materials.

ARCHITECTS' AND ENGINEERS' SPECIFICATIONS

The microphone shall be a cardioid dynamic type with uniform frequency response from 60 to 15,000 cps. The diaphragm shall be nonmetallic Acoustalloy® and shall have a magnetic shield to prevent dust and iron particles from reaching the diaphragm. It shall be possible to select 150 ohm and high impedances by moving one wire in the cable connector.

The microphone shall be provided with a slotted tube at the back of the diaphragm, the acoustic impedance of which shall cause the tube to act effectively as a point source entrance which varies in distance from the diaphragm inversely with frequency. The resulting phase and amplitude conditions shall provide a smooth unidirectional polar characteristic. An integral bass-tilt switch shall be included, offering choice of 0, 5, or 10 db attenuation at 100 cps. Use of this switch shall not alter polar pattern.

The output level for 150-ohm impedance shall be -57 db with 0 db equaling 1 mw/10 dynes/cm^2. Output level for high impedance shall be -57 db with 0 db equaling 1 v/dyne/cm^2. EIA sensitivity rating shall be -151 db for 150-ohm impedance and -152 db for high impedance.

The case shall be pressure cast zinc, and length and diameter shall not exceed 7-3/8" and 1-1/4" respectively. Net weight shall be 12 oz., less cable. Finish shall be satin chrome (for Model 676G, finish shall be decorative gold color, for Model 676A, finish shall be TV gray).

A 15-foot, 2-conductor, shielded broadcast type cable shall be provided. The microphone shall be equipped with an Amphenol model 91-MC4F connector or equivalent. The connector shall provide cable flex relief and shall be field serviceable. Stand adapter suitable for 5/8" -27 thread shall be supplied.

The Electro-Voice Model 676 is specified.

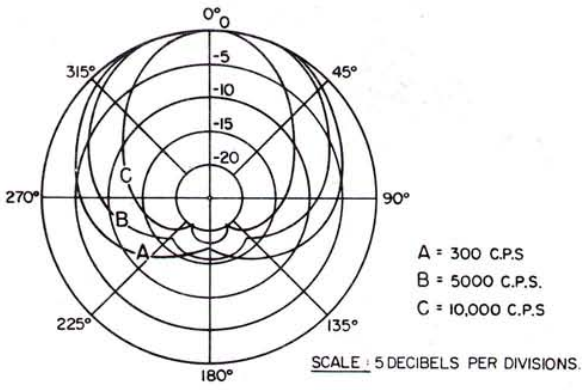

Figure 2 - Polar Pattern

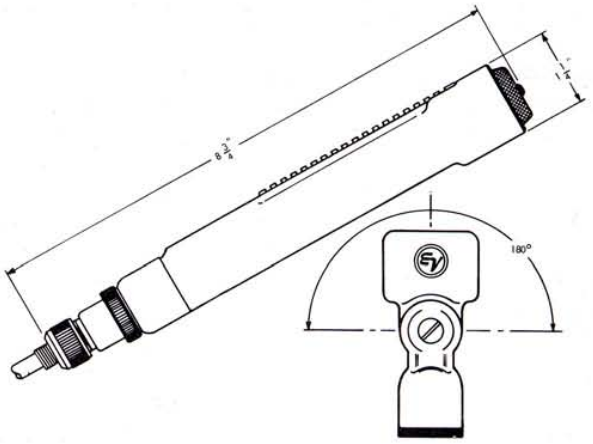

Figure 3 - Dimensions

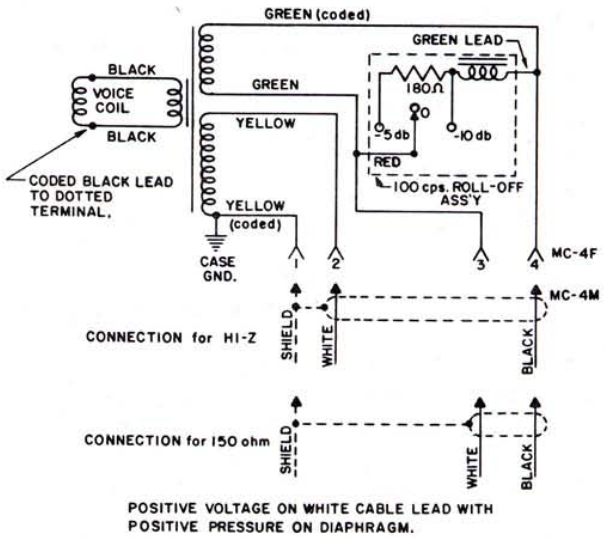

Figure 4 - Schematic Wiring Diagram

Part No. 531460 ELECTRO-VOICE, INC. / Buchanan, Michigan Litho in U.S.A.