Irrigation Manual

Planning, Development, Monitoring and Evaluation of Irrigated Agriculture with Farmer Participation

Module 8

Sprinkler Irrigation Systems

Planning, Design, Operation and Maintenance

Developed by

Andreas P. SAVVA

and

Karen FRENKEN

Water Resources Development and Management Officers

FAO Sub-Regional Office for East and Southern Africa

In collaboration with

Simon MADYIWA, Irrigation Engineer Consultant

Kennedy MUDIMA, National Irrigation Programme Officer, Zimbabwe

Tove LILJA, Associate Professional Officer, FAO-SAFR

Victor MTHAMO, Irrigation Engineer Consultant

Harare, 2001

Food and Agriculture Organization of the United Nations (FAO)

Sub-Regional Office for East and Southern Africa (SAFR)

Harare, 2002

The views expressed in this paper are those of the authors and do not necessarily reflect the views of the Food and Agriculture Organization of the United Nations

The designations employed and the presentation of the material in this publication do not imply the expression of any opinion whatsoever on the part of the Food and Agriculture Organization of the United Nations concerning the legal status of any country, territory, city or area of its authorities, or concerning the delimitation of its frontiers or boundaries

All rights reserved. No part of this publication may be reproduced, stored in a retrieval system, or transmitted in any form or by any means, electronic, mechanical, photocopying or otherwise, without the prior permission of the copyright owner

© FAO SAFR 2001

Design and Layout: Fontline International, Mauritius
Printed by: Préci-ex, Les Pailles, Mauritius

Contents

List of figures v
List of tables vi
Foreword vii
Acknowledgement ix
Units conversion tables x
List of acronyms xi

1. INTRODUCTION 1
   1.1. Principles of preliminary design 1
   1.2. Principles of design adjustment 2

2. PRELIMINARY SPRINKLER IRRIGATION DESIGN STEPS 5
   2.1. Net depth of water application 5
   2.2. Irrigation frequency at peak water demand and irrigation cycle 7
   2.3. Gross depth of water application 8
   2.4. Preliminary system capacity 8

3. FINAL DESIGN STEPS FOR PERIODIC MOVE SYSTEMS 9
   3.1. Sprinkler selection and spacing 9
   3.2. Layout and final design 12
      3.2.1. Design of a semi-portable sprinkler irrigation system for individual farms 12
      3.2.2. Design of a semi-portable sprinkler irrigation system for a smallholder scheme 28
      3.2.3. Design of a drag-hose sprinkler system for a smallholder scheme 41
   3.3. Bill of quantities 49
      3.3.1. System components for semi-portable and drag-hose irrigation systems 49
      3.3.2. Map and drawings 55
      3.3.3. Estimation of labour requirements for construction activities 55
      3.3.4. Summary of bill of quantities 58
   3.4. Operation of in-field irrigation infrastructure of semi-portable and drag-hose irrigation systems systems 62
   3.5. Maintenance of the irrigation infrastructure 62

4. DESIGN OF TRAVELLING IRRIGATORS 63
   4.1. Introduction 63
   4.2. Preliminary design steps 65
   4.3. Adjustment and final design steps 66
      4.3.1. Sprinkler selection 66
      4.3.2. Tow-path spacing 67
      4.3.3. Travel speed 68
      4.3.4 Standing positions, times and hose length 69
      4.3.5. Selection of the traveller 72
   4.4. Total dynamic head requirements 72
      4.4.1. Pressure requirements at mainline valve hydrant 72
      4.4.2. Head loss in mainline 72
      4.4.3. Total dynamic head 72
   4.5. Power requirements 72
   4.6. System components 72

4.6.1. The irrigation machine 72
4.6.2. The hose reel trailer 74
4.6.3. The hose 74
4.6.4. The gun sprinkler 74
4.7. Bill of quantities 75
4.8. System operation 75
4.9. Maintenance of traveling irrigators 77

REFERENCES 79

List of figures

1. Design of periodic move sprinkler systems 3
2. Design of continuous sprinkler systems 4
3 Effect of pressure on water distribution pattern of a two nozzle sprinkler 9
4. Farm map 12
5. System layout based on 15 m x 15 m spacing and long laterals 14
6. System layout based on 12 mx 18 m spacing and long laterals 15
7. System layout based on 12 mx 18 m spacing and short laterals 16
8. Head losses in aluminium pipes 19
9. Friction loss chart for uPVC pipes 20
10. Friction loss chart for AC pipes (Class 12) 21
11. Friction loss chart for AC pipes (Class 18) 22
12. System layout and pipe sizing based on 12 m x 18 m spacing and short laterals (first attempt) 24
13. System layout and pipe sizing based on 12 m x 18 m spacing and short laterals (final, after modifications to meet the allowable pressure variation) 27
14. Plot layout in smallholder scheme 29
15. Semi-portable system layout based on 12 m x 12 m spacing with tertiaries serving two plots (first attempt for pipe sizing) 30
16. System layout based on 12 m x 12 m spacing with each tertiary serving one plot (semi-portable) 32
17a. Downhill flow laterals at lower part of plot 33
17b. Uphill flow laterals at upper part of plot 33
18. Semi-portable system layout based on 12 m x 12 m spacing with tertiaries serving two plots (final, after modifications to provide for allowable pressure variation) 37
19. Layout of a drag-hose sprinkler system based on 12 x 12 m spacing (first attempt for pipe sizing) 40
20a. Downhill flow; hoses at upper part of plot or nearest to secondary – position 1 42
20b. Downhill flow; hoses at lower part of plot or furthest from secondary – position 2 42
20c. Uphill flow; hoses at lower part of plot or nearest to secondary – position 1 42
20d. Uphill flow; hoses at upper part of plot or furthest from secondary – position 2 42
21. Layout of a drag-hose sprinkler system based on a 12 m x 12 m spacing (after modifications to provide for the allowable pressure variation) 48
22. Asbestos cement and cast iron fittings 50
23. uPVC fittings 51
24. Aluminium fittings for portable sprinkler lines 52
25. Fiberglass pipe joint using coupler 53
26. Common fiberglass fittings 53
27. Drawings for a semi-portable sprinkler system for commercial farms 54
28. Drawings for a semi-portable system for smallholders schemes 54
29. Drawings for a drag-hose system for smallholders 55
30. Hose-drag irrigator and field layout 63
31. Hose-pull irrigator and field layout 64
32. Farm map 64
33. Final system layout for traveller irrigation design (field: 630 m x 400 m) 73
34. Self-hauled cable-drawn irrigation machine 74
35. Hydraulic motor and winch for self-hauled cable-drawn irrigation machine 74
36. Typical gun sprinkler mounted on skids or wheels 75

List of tables

1. Available moisture for different major soil catagories 5
2. Ranges of maxium effective rooting depth (Zr) for common crops 5
3. Farm irrigation efficiencies for sprinkler irrigation in different climates 8
4. Typical basic soil infiltration rates 9
5. Performance of some sprinklers 10
6. Maximum sprinkler spacing as related to wind velocity, rectangular pattern 10
7. Maximum sprinkler spacing as related to wind velocity, square pattern 10
8. Maximum precipitation rates to use on level ground 11
9. Precipitation rates reduction on sloping ground 11
10. Suggested maxium sprinkler application rates for average soil, slope and tilth 11
11. Summary of sprinkler size and spacing options 17
12. Christiansens "F" factors for various numbers of outlets 18
13. Asbestos-cement pipe classes and corresponding pressure rating 23
14. uPVC pipe classes and corresponding working pressure rating 23
15. Total dynamic head requirements for a semi-portable system for an individual farm of 18 ha 28
16. Pressure variation on a plot by plot basis (semi-portable sprinkler system for smallholders) 35
17. Pressure variation on a plot by plot basis after changes in size of two secondaries and some tertiaries were introduced (semi-portable sprinkler system for smallholders) 36
18. Total head requirements of a semi-portable sprinkler system on a plot by plot basis (1st lateral position) 38
19. Total head requirements of a semi-portable sprinkler system for smallholders on a plot by plot basis (7th lateral position) 39
20. Pressure variation on a plot by plot basis – first attempt (drag-hose sprinkler system for smallholders) 44
21. Pressure variation on a plot by plot basis after changes in size of secondaries and tertiaries (drag-hose sprinkler system for smallholders) 45
22. Total head requirements of a drag-hose sprinkler system for smallholders on a plot by plot basis when hoses operate near the secondary (Figures 20a and 20c) 46
23. Total head requirements of drag-hose sprinkler system for smallholders on a plot by plot basis when hoses operate far from secondary (Figures 20b and 20d) 47
24. Labour for setting out, pipe trenching, back-filling, fencing and drain construction for a semi-portable system for an individual farm of 18 ha 58
25. Labour for setting out, pipe trenching, back-filling, fencing and drain construction for a semi-portable system and a drag hose system smallholders 58
26. Bill of quantities for a semi-portable system for an individual farm 59
27. Bill of quantities for a semi-portable irrigation system for a smallholder scheme with one tertiary serving two plots 60
28. Bill of quantities for a drag-hose system for a smallholder scheme 61
29. Discharges and wetted diameters for gun sprinklers with 24 degree angles of trajectory and tapered nozzles operating when there is no wind 66
30. Suggested maximum sprinkler application rates for average soil, slope and tilth 67
31. Typical recommended tow-path spacings for travelling gun sprinklers under various wind conditions, trajectory angles between 23 and 25 degrees 68
32. Estimated friction loss gradient values in m per 100 m, for lay-flat irrigation hose operating at approximately 70.3 m pressure rating 71
33. Hose inlet pressure requirements 72
34. Total dynamic head requirements 72
35. Bill of quantities for hose-drag traveller irrigation system for 25.2 ha 76

Foreword

The first edition of the Irrigation Manual was published in 1990 in two volumes by the "Smallholder Irrigation" Project (UNDP/FAO/AGRITEX/ZIM/85/004). The authors of this first edition were FAO Staff on the project[1]. This edition of one hundred copies ran out within two years from publishing.

Although the manual was written with Zimbabwe in mind, it soon became popular in several countries of the sub-region. In view of the high demand, it was decided to proceed with a second edition. The experience gained from using the first edition of the manual as the basic reference for the AGRITEX[2] training programme of irrigation practitioners and the University of Zimbabwe, was incorporated in the second edition which was published in 1994, in one volume by the "Technical Assistance to AGRITEX" project (UNDP/FAO/AGRITEX/ZIM/91/005). This second edition was published under the same authors as the first edition, with the assistance of a review committee from AGRITEX[3]. The two hundred copies of this edition also ran out within two years of publishing.

In 1995, the FAO Sub-regional Office for East and Southern Africa (SAFR) was established in Harare, Zimbabwe, in order to provide easy access to technical assistance and know-how for the countries of the sub-region[4]. In view of the high demand for support in the field of smallholder irrigation by the countries of the sub-region, this office was strengthened with four water resources management officers and a number of on-going programmes have been developed to provide this support. One of these programmes is the publishing of a new regional edition of the irrigation manual in support of the on-going national training programmes within several countries in the sub-region and to provide the basic reference for another important programme, which is the sub-regional training on planning and design of smallholder irrigation schemes.

This third edition aspires to further strengthen the engineering, agronomic and economic aspects of the manual and to introduce new modules related to social, health and environmental aspects of irrigation development. The emphasis is directed towards the engineering, agronomic and economic aspects of smallholder irrigation, in view of the limited practical references in this area. This manual, being directed to the irrigation practitioner, does not provide an in-depth analysis of the social, health and environmental aspects in irrigation development. It only attempts to introduce the irrigation practitioner to these areas, providing a bridge between the various disciplines involved in irrigation development.

The initiatives and efforts of the Water Resources Management Team of SAFR in publishing this Manual are considered as a valuable contribution to the dissemination of knowledge and training of irrigation practitioners in the sub-region. The material covered by this manual is expected to support both national and sub-regional training programmes in the planning, design, construction, operation and maintenance and on-farm water management of irrigation schemes. This will support the implementation of FAO's mandate to increase food production through water control, intensification and diversification, which are the basic components of the Special Programme for Food Security (SPFS).

The manual is the result of several years of field work and training irrigation engineers in the sub-region. The approaches have been field tested and withstood the test of time.

---

[1] *A.P. Savva, Chief Technical Advisor; J. Stoutjesdijk, Irrigation Engineer; P.M.A. Regnier, Irrigation Engineer; S.V. Hindkjaer, Economist.*

[2] *Agritex: Department of Agricultural Technical and Extension Services, Ministry of Lands and Agriculture, Zimbabwe.*

[3] *Review committee: E. Chidenga, Acting Chief Irrigation Officer; P. Chipadza, Senior Irrigation Specialist; A. Dube, Senior Irrigation Specialist; L. Forichi, Irrigation Specialist; L. Madhiri, Acting Principal Irrigation Officer; S. Madyiwa, Irrigation Specialist; P. Malusalila, Chief Crop Production; R. Mariga, Assistant Secretary, Economic and Markets Branch; D. Tawonezvi, Agricultural Economist.*

[4] *The following 21 countries are part of the FAO-SAFR region: Angola, Botswana, Burundi, Comoros, Eritrea, Ethiopia, Kenya, Lesotho, Madagascar, Malawi, Mauritius, Mozambique, Namibia, Rwanda, Seychelles, South Africa, Swaziland, Tanzania, Uganda, Zambia, Zimbabwe.*

For ease of reference to the various topics covered by this Manual, the material has been divided into 14 modules, covering the following:

Module 1:	Irrigation development: a multifaceted process
Module 2:	Natural resources assessment
Module 3:	Agronomic aspects of irrigated crop production
Module 4:	Crop water requirements and irrigation scheduling
Module 5:	Irrigation pumping plant
Module 6:	Guidelines for the preparation of technical drawings
Module 7:	Surface irrigation systems: planning, design, operation and maintenance
Module 8:	Sprinkler irrigation systems: planning, design, operation and maintenance
Module 9:	Localized irrigation systems: planning, design, operation and maintenance
Module 10:	Irrigation equipment for pressurized systems
Module 11:	Financial and economic appraisal of irrigation projects
Module 12:	Guidelines for the preparation of tender documents
Module 13:	Construction of irrigation schemes
Module 14:	Monitoring the technical and financial performance of an irrigation scheme

To those who have been waiting for so long for a practical irrigation engineering manual: here it is. I am sure that it will have a lot to offer to both new and experienced irrigation engineers.

Victoria Sekitoleko
FAO Sub-Regional Representative
for East and Southern Africa

Acknowledgements

The preparation of this third edition of the Irrigation Manual is an initiative of FAO's Sub-Regional Office for East and Southern Africa (SAFR).

The whole project was managed and coordinated by Andreas P. Savva and Karen Frenken, Water Resources Development and Management Officers at FAO-SAFR. Andreas P. Savva is considered as the main author and Karen Frenken as the main technical editor. Substantial inputs to this manual were also provided by Kennedy Mudima, National Irrigation Programme Officer, and Tove Lilja, Associated Professional Officer at FAO-SAFR, during the review of the individual modules.

The present Module 8 received substantial inputs from Simon Madyiwa, Irrigation Engineer Consultant, whose contribution is appreciated. Inputs from Victor Mthamo, Irrigation Engineer Consultant, are also acknowledged.

Special appreciation is extended to Chris Pappas for his substantial contribution to the layout of the irrigation manual.

Unit conversion table

Length

1 inch (in)	0.0254 m
1 foot (ft)	0.3048 m
1 yard (yd)	0.9144 m
1 mile	1609.344 m
1 metre (m)	39.37 inches (in)
1 metre (m)	3.28 feet (ft)
1 metre (m)	1.094 yards (yd)
1 kilometre (km)	0.62 miles

Area

1 square inch (in^2)	6.4516×10^{-2} m^2
1 square foot (ft^2)	0.0929 m^2
1 square yard (yd^2)	0.8361 m^2
1 acre	4046.86 m^2
1 acre	0.4046 ha
1 square centimetre (cm^2)	0.155 square inches (in^2)
1 square metre (m^2)	10.76 square feet (ft^2)
1 square metre (m^2)	1.196 square yard (yd^2)
1 square metre (m^2)	0.00024 acres
1 hectare (ha)	2.47 acres

Volume

1 cubic inch (in^3)	1.6387×10^{-5} m^3
1 cubic foot (ft^3)	0.0283 m^3
1 cubic yard (yd^3)	0.7646 m^3
1 cubic centimetre (cm^3)	0.061 cubic inches (in^3)
1 cubic metre (m^3)	35.315 cubic feet (ft^3)
1 cubic metre (m^3)	1.308 cubic yards (yd^3)

Capacity

1. imperial gallon	0.0045 m^3
1. US gallon	0.0037 m^3
1. imperial barrel	0.1639 m^3
1. US. barrel	0.1190 m^3
1 pint	0.5681 l
1 US gallon (dry)	0.0044 m^3
1 litre (l)	0.22 imp. gallon
1 litre (l)	0.264 U.S. gallon
1 litre (l)	0.0061 imperial barrel
1 hectolitre (hl)	100 litres = 0.61 imperial barrel = 0.84 US barrel
1 litre (l)	1.760 pints
1 cubic metre of water (m^3)	1000 l = 227 U.S. gallon (dry)
1 imperial barrel	164 litres

Mass

1 ounce	28.3286 g
1 pound	0.4535 kg
1 long ton	1016.05 kg
1 short ton	907.185 kg
1 gram (g)	0.0353 ounces (oz)
1 kilogram (kg)	1000 g = 2.20462 pounds
1 ton	1000 kg = 0.984 long ton = 1.102 short ton

Pressure

1 pound force/in^2	6894.76 N/m^2
1 pound force/in^2	51.7 mm Hg
1 Pascal (PA)	1 N/m^2 = 0.000145 pound force /in^2
1 atmosphere	760 mm Hg = 14.7 pound force/in^2 (lbf/in^2)

Energy

1 B.t.u.	1055.966 J
1 foot pound-force	1.3559 J
1 B.t.u.	0.25188 Kcalorie
1 B.t.u.	0.0002930 KWh
1 Joule (J)	0.000947 B.t.u.
1 Joule (J)	0.7375 foot pound-force (ft.lbf)
1 kilocalorie (Kcal)	4185.5 J = 3.97 B.t.u.
1 kilowatte-hour (kWh)	3600000 J = 3412 B.t.u.

Power

1 Joule/sec	0.7376 foot pound/sec
1 foot pound/sec	1.3557 watt
1 cheval-vapor	0.9861 hp
1 Kcal/h	0.001162 kW
1 watt (W)	1 Joule/sec = 0.7376 foot pound/sec (ft lbf/s)
1 horsepower (hp)	745.7 watt 550 ft lbf/s
1 horsepower (hp)	1.014 cheval-vapor (ch)
1 kilowatt (kW)	860 Kcal/h = 1.34 horsepower

Temperature

^{0}C (Celsius or centigrade-degree)	$^0C = 5/9 \times (^0F - 32)$
^{0}F (Fahrenheit degree)	$^0F = 1.8 \times {}^0C + {}^0F$
^{0}K (Kelvin degree)	$^0K = {}^0C + 273.15$

List of acronyms

AC	Asbestos Cement
ASAE	American Society of Agricultural Engineers
BHP	Brake power
D	Diameter
d_{gross}	Gross Depth of Water Application
d_{net}	Net Depth of Water Application
E	Efficiency
f	Irrigation Frequency
FC	Field Capacity
FD	Final Distance from the edge of the Field in Irrigation Traveller Design
g	Acceleration due to gravity
Hf_{100}	Frictional Losses per 100 m of Pipe
HL	Head Loss
I	Infiltration Rate
IF	Irrigation Frequency
K	Constant
Kpa	Kilopascal
kW	kilowatt
L	Length
N_c	Number of Laterals in Operation
N_s	Number of Sprinklers per Lateral
P	Allowable Moisture Depletion
P_r	Sprinkler Precipitation Rate
PWP	Permanent Wilting Point
Q	Discharge
R	Wetted Radius
RZD	Effective Root Zone Depth
SD	Initial Distance from the edge of the Field in Irrigation Traveller Design
SOP	Sprinkler Operating Pressure
T	Irrigation Time
TDH	Total dynamic head
T_s	Set Time
uPVC	Unplastisized Polyvinyl Chloride
UV	Ultra-Violet
V	Velocity
WU	Peak Daily Water Use
ZITC	Zimbabwe Irrigation Technology Centre
Zr	Maxium effective rooting depth

Chapter 1
Introduction

A sprinkler irrigation system generally includes sprinklers, laterals, submains, main pipelines, pumping plants and boosters, operational control equipment and other accessories required for efficient water application. In some cases, sprinkler systems may be pressurized by gravity and therefore pumping plants may not be required.

The planning and design of irrigation systems should aim at maximizing the returns and minimizing both the initial capital outlay and the costs per unit volume of water used, thus contributing both directly and indirectly to the overall reduction of the production costs and the increase of returns. In other words, planning and design is a process of optimizing resources. The types and potential uses of sprinkler irrigation systems are dealt with in Module 1.

The procedure for designing sprinkler systems can be divided into two phases:

1. Preliminary design steps
2. Adjustment or final design steps

Preliminary design steps comprise the procedure for synthesizing farm data in order to determine preliminary design parameters, which will be needed in the final design adjustment process. The final design steps reconcile the preliminary design parameters obtained with the irrigation equipment performance characteristics, as well as human, physical and financial factors. In fact, the final adjustment of the design is the process of selecting the appropriate irrigation system components for the specific circumstances.

This module focuses on the processes involved in the designing of different types of sprinkler irrigation systems, the selection of system components and the preparation of bill of quantities. In the bill of quantities, the construction of shallow drains will be incorporated. It should be kept in mind, however, that these drains are not needed because of irrigation runoff. They are put in place to protect the fields from flooding through high intensity rainstorms.

As not all sprinkler irrigation systems can be covered within the scope of the manual, the following sprinkler irrigation systems will be used as examples to illustrate the design procedure:

1. Semi-portable sprinkler irrigation system for an individual farm
2. Semi-portable sprinkler irrigation system for a small-holder scheme (system for several small plot holders)
3. Drag-hose sprinkler irrigation system for a smallholder scheme (system for several small plot holders)
4. Hose-drag travelling irrigator for individual farm
5. Hose-pull travelling irrigator for individual farm

The same type of field with the same contour lines will be used for the design of the first three systems and another type of field for the design of the last two continuous-move or travelling sprinkler irrigators.

The outputs of the designs are alternative irrigation system options for possible adoption. Once the components of each system are selected, a bill of quantities will be drawn up for each case in order to estimate the cost of the project. The alternative designs and their estimated costs, together with the irrigation system selection criteria dealt with in Module 1 and the economic and financial analyses dealt with in Module 11, will then be used as the basis for selecting which option to implement.

1.1. Principles of preliminary design

The first step in the preliminary design phase is the collection of basic farm data. The data include:

- a topographic map showing:
  - The proposed irrigated area, with contour lines
  - Farm and field boundaries and water source or sources
  - Power points, such as electricity lines, in relation to water source and area to be irrigated, roads and other relevant general features such as obstacles
- data on water resources, quantity and quality over time, on water rights and on cost of water where applicable
- the climate of the area and its influence on the water requirements of the selected crops
- the soil characteristics and their compatibility with the crops and irrigation system proposed
- the types of crops intended to be grown and their compatibility with both the climate in the area, the water availability and the soils; current agricultural practices should be identified

The next step is to analyze the farm data in order to determine the following preliminary design parameters:

- peak and total irrigation water requirements
- infiltration rate of soils to be irrigated
- maximum net depth of water application per irrigation
- irrigation frequency and cycle
- gross depth of water application
- preliminary system capacity

1.2. Principles of design adjustment

Once the preliminary design parameters are determined, the next phase is to reconcile them with the performance of the irrigation equipment and arrive at the final design. The final design steps involve:

- identification of irrigation system options with farmer participation
- preparation of system layout for the field shape and topography
- the hydraulic design and iterative adjustments
- irrigation equipment selection taking into consideration economic and financial aspects
- final irrigation system selection as well as options, taking into consideration farmers' preferences, management capabilities, labour aspects, financial capabilities and constraints

The final design steps are intended to make the irrigation system selected compatible with the preliminary design factors. Each of the design steps is needed, irrespective of the irrigation system selected. However, the application of the final design steps varies between the periodic-move systems and the continuous-move systems. The differences are due to the fact that the periodic-move systems apply water for a set time while stationary before moving to the next position, while the continuous-move systems apply water while in motion. Furthermore, within each broad system, the final design steps vary among the different types of sprinkler systems mentioned in the introductory section of this module.

In the next sections, first the preliminary design process, which is the same for all systems, will be illustrated using an example. The final design process, for each of the periodic-move systems and continuous-move systems will be treated separately, in order to allow the specific aspects related to each system to come out clearly and be understood during the design process.

The general steps to be followed for periodic-move and continuous-move systems are presented diagrammatically in Figures 1 and 2 respectively.

Figure 1
Design of periodic-move sprinkler systems (adapted from the Irrigation Association, 1983)

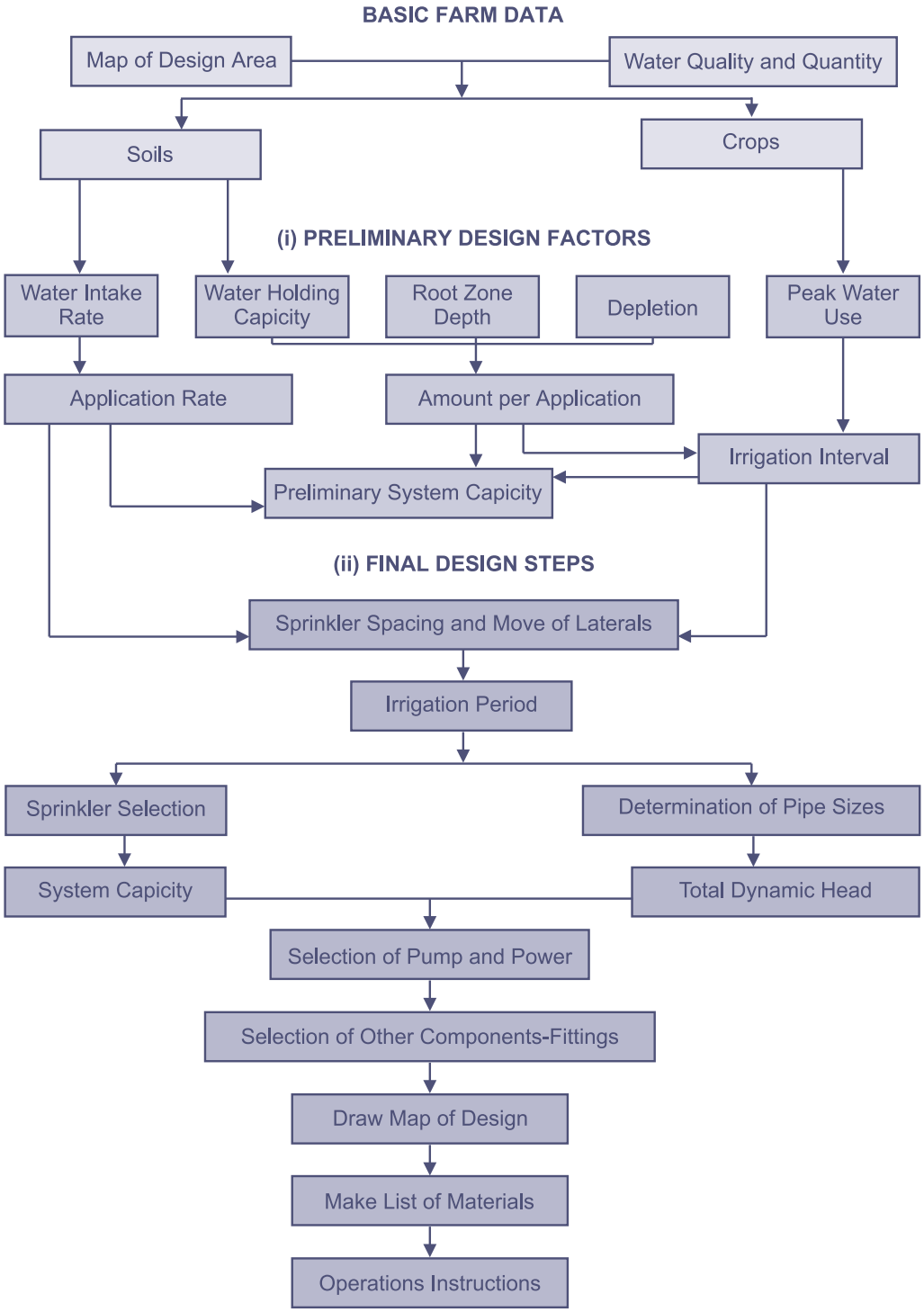

Figure 2
Design of continuous-move sprinkler systems

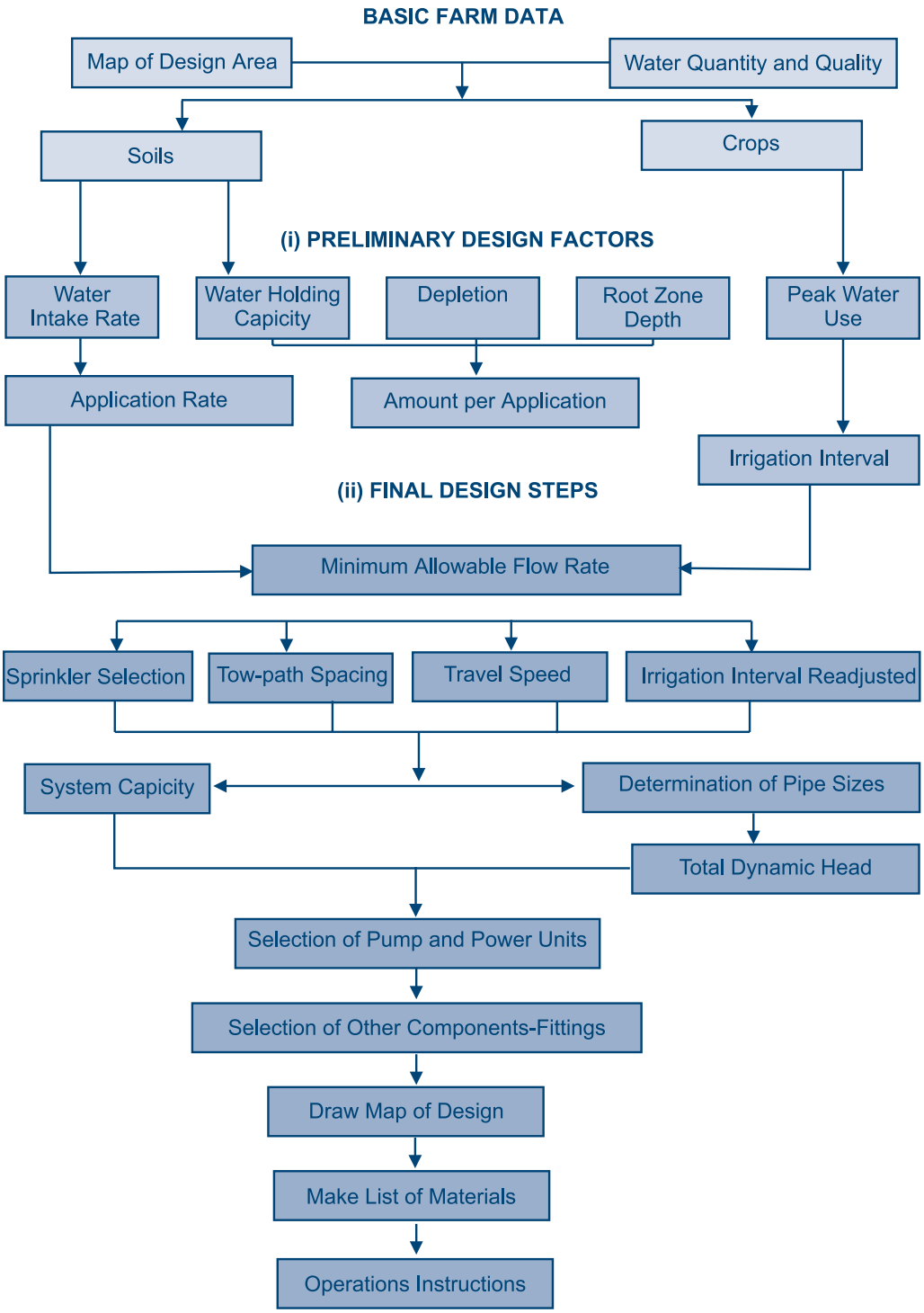

Chapter 2
Preliminary sprinkler irrigation design steps

The preliminary design factors that need to be established are: depth of water application per irrigation, irrigation frequency, duration of irrigation per set and required system capacity (flow rate). All these design parameters are derived from the data on climate, water, soil and plant.

2.1. Net depth of water application

The depth of water application is the quantity of water, which should be applied during irrigation in order to replenish the water used by the crop during evapotranspiration. The computation of the net depth of water application requires the following inputs:

- the available soil moisture (FC-PWP)
- the allowable soil moisture depletion (P)
- the effective root zone depth of the crop (RZD)

Soil survey and tests should be done to determine the field capacity (FC) and permanent wilting point (PWP) of the soil. In the absence of equipment and time to do that, figures from literature, preferably local, can be used as estimates once the soil texture is known. However, published data on available moisture of different soil types do not always agree. Table 1 presents such data from two different sources. The difference between field capacity and permanent wilting point will give the available soil moisture (water holding capacity), which is the total amount of water that the crop can use. Depending on the crop sensitivity to stress, the soil moisture should be allowed to be depleted only partially. For most field crops, a depletion of 50% of the available moisture is acceptable. This is the moisture that will be easily available to the crop without causing undue stress.

From past experience under irrigated conditions and similar climatic and soil conditions or from literature the effective root zone depth of the crop under consideration can be established. Table 2 provides generalised data on maximum rooting depth. It is advisable, however, to use local data when available as these can be more realistic.

Table 1

Available moisture for different major soil categories

From Israelson and Hansen (1967)		From Withers and Vipond (1974)	
Soil Category	**Available Moisture mm/m**	**Soil Category**	**Available Moisture mm/m**
Sandy	70-100	Sand	55
Sandy loam	90-150	Fine Sand	80
Loam	140-190	Sandy loam	120
Clay loam	170-220	Clay loam	150
Silty Clay	180-230	Clay	235
Clay	200-250		

Table 2

Ranges of maximum effective rooting depth (Zr) for common crops (Source: FAO, 1998)

Crop	Maximum Root Depth Zr[1] m
a. Small Vegetables	
Broccoli	0.4-0.6
Brussel sprouts	0.4-0.6
Cabbage	0.5-0.8
Carrots	0.5-1.0
Cauliflower	0.4-0.7
Celery	0.3-0.5
Garlic	0.3-0.5
Lettuce	0.3-0.5
Onions – dry	0.3-0.6
– green	0.3-0.6
– seed	0.3-0.6
Spinach	0.3-0.5
Radishes	0.3-0.5
b. Vegetables – Solanum Family (Solanaceae)	
Egg Plant	0.7-1.2
Sweet Peppers (bell)	0.5-1.0
Tomato	0.7-1.5
c. Vegetables – Cucumber Family (Cucurbitaceae)	
Cantaloupe	0.9-1.5
Cucumber: Fresh Market	0.7-1.2
Machine harvest	0.7-1.2
Pumpkin, Winter Squash	1.0-1.5
Squash, Zucchini	0.6-1.0
Sweet Melons	0.8-1.5
Watermelon	0.8-1.5

[1] *The larger values for Zr are for soils having no significant layering or other characteristics that can restrict rooting depth. The smaller values for Zr may be used for irrigation scheduling and the larger values for modelling soil water stress or for rainfed conditions.*

Crop	Maximum Root Depth[1] m
d. Roots and Tubers	
Beets, table	0.6-1.0
Cassava – year 1	0.5-0.8
– year 2	0.7-1.0
Parnsip	0.5-1.0
Potato	0.4-0.6
Sweet Potato	0.4-0.6
Turnip (and Rutabaga)	0.5-1.5
Sugar Beet	0.7-1.2
e. Legumes (Leguminosae)	
Beans, green	0.5-0.7
Beans, dry and Pulses	0.6-0.9
Beans, lima, large vines	0.8-1.2
Chick pea	0.6-1.0
Fababean (broad bean) – Fresh	0.5.-0.7
– Dry/Seed	0.5-0.7
Grabanzo	0.6-1.0
Green Gram and Cowpeas	0.6-1.0
Groundnut (Peanut)	0.5-1.0
Lentil	0.6-0.8
Peas – Fresh	0.6-1.0
– Dry/Seed	0.6-1.0
Soybeans	0.6-1.3
f. Perennial Vegetables (with winter dormancy and initially bare or mulched soil)	
Artichokes	0.6-0.9
Asparagus	1.2-1.8
Mint	0.4-0.8
Strawberries	0.2-0.3
g. Fibre Crops	
Cotton	1.0-1.7
Flax	1.0-1.5
Sisal	0.5-1.0
h. Oil crops	
Castorbean (Ricinus)	1.0-1.2
Rapeseed, Canola	1.0-1.5
Safflower	1.0-1.2
Sesame	1.0-1.5
Sunflower	0.8-1.5
i. Cereals	
Barley	1.0-1.5
Oats	1.0-1.5
Spring Wheat	1.0-1.5
Winter Wheat	1.5-1.8
Maize, field (grain) (field corn)	1.0-1.7
Maize, Sweet (sweet corn)	0.8-1.2

Crop	Maximum Root Depth[1] m
Millet	1.0-1.2
Sorghum – grain	1.0-1.2
– sweet	1.0-1.2
Rice	0.5-1.0
j. Forages	
Alfalfa – for hay	1.0-1.2
– for seed	1.0-3.0
Bermuda – for hay	1.0-1.5
– spring crop for seed	1.0-1.5
Clover hay, Berseem	0.6-0.9
Rye grass hay	0.6-1.0
Sudan Grass hay (annual)	1.0-1.5
Grazing Pasture – Rotated Grazing	0.5-1.5
– Extensive Grazing	0.5-1.5
Turf grass – cool season[2]	0.5-1.0
– warm season[2]	0.5-1.0
k. Sugar Cane	**1.2-2.0**
l. Tropical Fruits and Trees	
Banana – 1st year	0.5-0.9
– 2nd year	0.5-0.9
Cacao	0.7-1.0
Coffee	0.9-1.5
Palm Trees	0.7-1.1
Pineapple	0.3-0.6
Rubber Trees	0.9-1.5
Tea – non-shaded	0.9-1.5
– shaded	0.9-1.5
m. Grapes and Berries	
Berries (bushes)	0.6-1.2
Grapes – Table or Raisin	1.0-2.0
– Wine	1.0-2.0
Hops	1.0-1.2
n. Fruit Trees	
Almonds	1.0-2.0
Apples, Charries, Pears	1.0-2.0
Apricots, Peaches, Stone Fruit	1.0-2.0
Avocado	0.5-1.0
Citrus – 70% canopy	1.2-1.5
– 50% canopy	1.1-1.5
– 20% canopy	0.8-1.1
Conifer Trees	1.0-1.5
Kiwi	0.7-1.3
Olives (40% to 60% ground coverage by canopy)	1.2-1.7
Pistachios	1.0-1.5
Walnut Orchard	1.7-2.4

[1] *The larger values for Zr are for soils having no significant layering or other characteristics that can restrict rooting depth. The smaller values for Zr may be used for irrigation scheduling and the larger values for modelling soil water stress or for rainfed conditions.*

[2] *Cool season grass varieties include bluegrass, ryegrass and fescue. Warm season varieties include bermuda grass, buffalo grass and St. Augustine grass. Grasses are variable in rooting depth. Some root below 1.2 m while others have shallow rooting depths. The deeper rooting depths for grasses represent conditions where careful water management is practiced with higher depletion between irrigations to encourage the deeper root exploration.*

The maximum net depth to be applied per irrigation can be calculated, using the following equation:

Equation 1

d_{net} = (FC-PWP) x RZD x P

Where:

d_{net} = readily available moisture or net depth of water application per irrigation for the selected crop (mm)

FC = soil moisture at field capacity (mm/m)

PWP = soil moisture at the permanent wilting point (mm/m)

RZD = the depth of soil that the roots exploit effectively (m)

P = the allowable portion of available moisture permitted for depletion by the crop before the next irrigation

In order to express the depth of water in terms of the volume, the area proposed for irrigation must be multiplied by the depth:

Equation 2

Volume of water to be applied (m^3) = 10 x A x d

Where:

A = area proposed for irrigation (ha)

d = depth of water application (mm)

Example 1

The following soil and crop data are provided:

- *Area to be irrigated = 18 ha*
- *Soil: medium texture, loam*
- *Crop: Wheat with peak daily water use = 5.8 mm/day*
- *Available moisture (FC-PWP) = 140 mm/m*
- *P = 50% or 0.5*
- *RZD = 0.7 m*
- *Soil infiltration rate = 5-6 mm/hr*
- *Average wind velocity in September = 10 km/hr*
- *Average wind velocity in October = 11 km/hr*

What is the maximum net depth of water application?

Using Equation 1, d_{net} can be computed as follows:

d_{net} = 140 x 0.7 x 0.5 = 49 mm

For an area of 18 ha, using Equation 2, a net application of 8 820 m^3 (10 x 18 x 49) of water will be required per irrigation to bring the root zone depth of the soil from the 50% allowable depletion level to the field capacity.

2.2. Irrigation frequency at peak demand and irrigation cycle

The peak daily water use is the peak daily water requirement of the crop determined by subtracting the rainfall (if any) from the peak daily crop water requirements.

Irrigation frequency is the time it takes the crop to deplete the soil moisture at a given soil moisture depletion level. After establishing the net depth of water application, the irrigation frequency at peak water demand should be determined using the following equation:

Equation 3

$$\text{Irrigation frequency (IF)} = \frac{d_{net}}{wu}$$

Where:

IF = irrigation frequency (days)

d_{net} = net depth of water application (mm)

wu = peak daily water use (mm/day)

Different crops require different amounts of water at the different stages of growth. Details on this can be found in Module 4. From the meteorological data of the nearest meteorological station and using internationally recognized methods (e.g. Penman-Monteith) the crop and irrigation water requirements can be estimated. It should be mentioned that for design purposes we are particularly interested in the peak daily amount of water used by the crop, which is the worst case scenario.

Example 2

The peak demand for wheat was estimated to be 5.8 mm/day. Therefore, using Equation 3 and the same data of Example 1:

$$\text{Irrigation Frequency (IF)} = \frac{49\ \text{m}}{5.8\ \text{mm/day}} = 8.4\ \text{days}$$

The system should be designed to provide 49 mm every 8.4 days. For practical purposes, fractions of days are not used for irrigation frequency purposes. Hence the irrigation frequency in our example should be 8 days, with a corresponding d_{net} of 46.4 mm (5.8 x 8) and a moisture depletion of 0.47 (46.4/(140 x 0.7)).

The question arises as to whether the irrigation system should apply the d_{net} in 8, 7, 6, right down to 1 day. This choice will depend on the flexibility the farmer would like to have and his/her willingness to pay the additional cost for different levels of flexibility. If irrigation is to be completed in 1 day, the system

becomes idle for the remaining 7 days, and the cost of the system would be exorbitant, since larger sizes of irrigation equipment would be required. On the other hand, for all practical purposes and in order to accommodate the time for cultural practices (spraying etc), it is advisable that irrigation is completed in less than the irrigation frequency. In the case of our example, 7 days irrigation and 1 day without irrigation is considered adequate. The 7 days required to complete one irrigation in the area under consideration is called the **irrigation cycle**.

2.3. Gross depth of water application

The gross depth of water application (d_{gross}) equals the net depth of irrigation divided by the farm irrigation efficiency. It should be noted that farm irrigation efficiency includes possible losses of water from pipe leaks.

Equation 4

$$d_{gross} = \frac{d_{net}}{E}$$

Where:

E = the farm (or unit) irrigation efficiency.

The farm irrigation efficiency of sprinkler systems varies from climate to climate. FAO (1982) proposed the following figures (Table 3):

Table 3

Farm irrigation efficiencies for sprinkler irrigation in different climates (Source: FAO, 1982)

Climate	Farm Irrigation Efficiency
Cool	80%
Moderate	75%
Hot	70%
Desert	65%

Example 3

Assuming a moderate climate for the area under consideration and applying Equation 4, the gross depth of irrigation should be:

$$d_{gross} = \frac{46.4}{0.75} = 61.87 \text{ mm}$$

2.4. Preliminary system capacity

The next step is to estimate the system capacity. The system capacity (Q), can be calculated using Equation 5:

Equation 5

$$Q = \frac{10 \times A \times d_{gross}}{I \times N_s \times T}$$

Where:

Q = system capacity (m^3/hr)
A = design area (ha)
d = gross depth of water application (mm)
I = irrigation cycle (days)
N_s = number of shifts per day
T = irrigation time per shift (hr)

Example 4

In our example, the area to be irrigated is 18 ha. In order to achieve the maximum degree of equipment utilization, it is desirable, but not always necessary, that the irrigation system should operate for 11 hours per shift at 2 shifts per day during peak demand and take an irrigation cycle of 7 days to complete irrigating the 18 ha.

Substituting the values in Equation 5 gives a system capacity of:

$$Q = \frac{10 \times 18 \times 61.87}{7 \times 2 \times 11} = 72.3 \text{ m}^3\text{/hr}$$

Chapter 3
Final design steps for periodic-move systems

Once the preliminary design parameters are obtained, the design adjustment can commence. The adjustment allows for the revision of the preliminary design parameters, in order to suit the physical, human, financial and equipment performance limitations or impositions. The next design step is to select the sprinkler and its spacing.

3.1. Sprinkler selection and spacing

The selection of the correct sprinkler depends on how the best fit spacing with a certain pressure and nozzle size can provide the water at an application rate that does neither cause runoff nor damage the crop and at the best possible uniformity under the prevailing wind conditions. The selected sprinkler should fully satisfy the irrigation water requirements and the irrigation frequency.

It is therefore necessary to know the infiltration rate of the soil before we can proceed with sprinkler selection. The infiltration rate can be determined using the double ring infiltrometers. In the absence of field data, the ranges of infiltration rate presented in Table 4 or any other literature can be used.

It should be pointed out that in order to avoid runoff the sprinkler application rate should not exceed the basic soil infiltration rate. Hence, the basic infiltration rate of the soil is used as a guide to select a sprinkler with a precipitation rate lower than the infiltration rate.

Manufacturers' tables such as Table 5 can be used to select sprinklers and their spacing. Reference to this table will reveal that for the same nozzle an increase in pressure will result in a larger wetted radius and higher discharge. Also, for the same pressure a bigger nozzle would result in a higher discharge.

Table 4
Typical basic soil infiltration rates

Soil type	Basic infiltration (mm/hr)
Clay	1 - 7
Clay Loam	7 - 15
Silt Loam	15 - 25
Sandy Loam	25 - 40
Sand	>40

In our example, where a precipitation rate of 5-6 mm/hr is compatible with the soil and crop, there are several nozzle size, pressure and sprinkler spacing combinations to choose from, for example:

1. A 4.0 mm nozzle at 300 kPa and 12 m x 18 m spacing, gives a precipitation rate of 5.0 mm/hr
2. The same 4.0 mm nozzle at 350 kPa and 15 m x 15 m spacing, gives a precipitation rate of 5.16 mm/hr, and at 12 m x 18 m spacing, gives a precipitation rate of 5.37 mm/hr
3. A 5.0 mm nozzle at 300 kPa and 18 m x 18 m spacing, gives a precipitation rate of 5.25 mm/hr
4. The same 5.0 mm nozzle at the same spacing under 350 kPa, gives a precipitation of 5.68 mm/hr

Another aspect to consider in selecting a sprinkler is the energy cost. Lower pressures are preferable as long as the

Figure 3
Effect of pressure on water distribution pattern of a two nozzle sprinkler

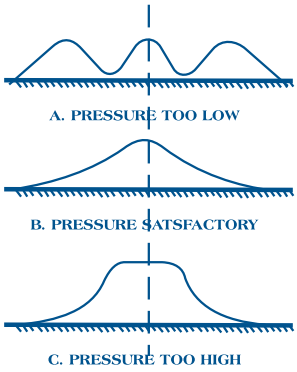

A. When the sprinkler operates at too low pressure, the droplet size is large. The water would then concentrate in a form of a ring at a distance from the sprinkler. This is very clear with the single nozzle sprinkler, giving a distribution resembling a doughnut.

B. The precipitation produced in figure B is within the desirable range.

C. When the pressure is too high, the water breaks into very fine droplets, settling around the sprinkler in no wind conditions. Under wind conditions, the distribution pattern is easily distorted.

Table 5

Performance of some sprinklers

Sprinkler Specifications				Sprinkler precipitation rate (mm/hr)						
				Sprinkler spacing (m x m)						
Nozzle Size (mm)	Pressure (kPa)	Q (m^3/hr)	Wetted Diam. (m)	9x12	9x15	12x12	12x15	12x18	15x15	18x18
3.0	250	0.57	25.00	5.28	4.22	3.96				
3.0	300	0.63	25.60	5.83	4.67	4.38				
3.0	350	0.68	26.20	6.30	5.04	4.72				
3.5	250	0.75	26.85	6.94	5.56	5.21	4.17			
3.5	300	0.82	27.60	7.59	6.07	5.69	4.56			
3.5	350	0.89	28.35	8.24	6.59	6.18	4.94			
4.0	300	1.08	26.60		8.00	7.50	6.00	5.00	4.60	
4.0	350	1.16	30.50		8.59	8.06	6.44	5.37	5.16	
4.5	300	1.32	30.95			9.17	7.33	6.11	5.87	
4.5	350	1.42	32.00			9.86	7.89	6.57	6.31	
4.5	400	1.52	33.05			10.56	8.44	7.04	7.56	
5.0	300	1.70	33.00				9.44	7.87	8.18	5.25
5.0	350	1.84	34.30				10.22	8.52	8.18	5.68
5.0	400	1.96	35.60				10.89	9.07	8.71	6.05

– *Nozzle size indicates the diameter of the orifice of the nozzle*
– *Pressure is the sprinkler operating pressure at the nozzle*
– *Discharge indicates the volume of water per unit time that the nozzle provides at a given pressure*
– *Wetted diameter shows the diameter of the circular area wetted by the sprinkler when operating at a given pressure and no wind*
– *The sprinkler spacing shows the pattern in which the sprinklers are laid onto the irrigated area. A 12 m x 18 m spacing means that sprinklers are spaced at 12 m along the sprinkler lateral line and 18 m between sprinkler lines*

Table 6

Maximum sprinkler spacing as related to wind velocity, rectangular pattern

Average Wind Speed (km/hr)	Spacing as Percent of Wetted Diameter (D)
Up to 10	40% between sprinklers 65% between laterals
10 - 15	40% between sprinkler 60% between laterals
above 15	30% between sprinklers 50% between laterals

Table 7

Maximum sprinkler spacing as related to wind velocity, square pattern

Average Wind Speed (km/hr)	Spacing as Percent of Wetted Diameter (D)
Up to 5	55%
6 - 11	50%
13 - 19	45%

uniformity of application is not compromised. The Coefficient of Uniformity (CU) is a measure of the uniformity of water application. A value of 100% indicates perfect uniformity, which means that the water is applied to the same depth at each point in the field. As a rule, the selected sprinkler should have a CU of 85% or more. Where locally manufactured sprinklers are not tested for CU determination, it is advisable to avoid using the lowest pressure since usually this is the pressure that corresponds to low CU values.

The effect of pressure on the water distribution from a sprinkler is demonstrated in Figure 3 from J. Keller and R. D. Bliesner (1990).

Assuming that all three spacings fit the land, the next step is to find out how the winds will affect the spacing. For this purpose, the mean wind velocity of the windiest month of the year is considered. Most designers set the maximum spacing of sprinklers based on the information of Tables 6 and 7. It should be noted also that in the rectangular pattern better distribution is obtained when the lateral is placed across the prevailing wind direction. For variable wind directions, the square pattern gives better uniformity.

In our example, where the average wind velocity in September is 10 km/hr and in October 11 km/hr, the

sprinkler spacing should be based on 50% of D for square pattern and 60% of D x 40% of D for rectangular pattern. The next step is to determine whether the three possible spacings above (15 m x 15 m, 12 m x 18 m, 18 m x 18 m) satisfy the wind requirements.

According to Table 5, the wetted diameter of the 4.0 mm nozzle at 350 kPa is 30.5 m. From Table 7, the spacing for a square pattern for 11 km/hr wind speed is 15.25 m (0.5 x 30.50). Therefore, since 50% of D is greater than the 15 m spacing between sprinklers and 15 m spacing between the laterals, the wind requirement is satisfied. Similarly from Table 6, for a wind speed of 10-15 km/hr, 40% of D and 60% of D for the 12 m x 18 m spacing are 12.2 m (> than 12 m sprinkler spacing) and 18.3 m (> than 18 m lateral spacing) respectively. Therefore, the wind requirements are satisfied both for the 15 m x 15 m and the 12 m x 18 m spacing.

Let us determine whether the same sprinkler with a 4.0 mm nozzle would satisfy the wind requirements at the 12 m x 18 m spacing at 300 kPa. At this pressure, the wetted diameter is 26.60 m. 40% of D and 60% of D are 10.64 m (< than 12 m sprinkler spacing) and 15.96 m (< than 18 m lateral spacing) respectively. For the 15 m x 15 m spacing, 50% of D is 13.3 m (0.50 x 26.60), which is less than the sprinkler and lateral spacings of 15 m each. Therefor, the 4.0 mm nozzle operating at 300 kPa pressure does not meet the wind requirements either under 12 m x 18 m spacing or 15 m x 15 m spacing as the wetted diameter is too small compared to the desired spacing requirement.

Following the same procedure, the 5.0 mm nozzle does not meet the wind requirements at either 300 kPa or 350 kPa and 18 m x 18 m spacing. It meets the wind requirements at 12 m x 18 m and 15 m x 15 m spacing, but the precipitation rate of these last two spacings exceeds the soil infiltration rate. Therefore, they are not compatible with the infiltration rate of the soil. Hence, the 5.0 mm nozzle can not be considered.

The 4.5 mm nozzle would meet the wind requirements at 300 kPa and a sprinkler spacing of 12 m x 18 m and 15 m x 15 m. However, the 12 m x 18 m spacing exceeds the infiltration rate of the soil.

As mentioned before, in designing a sprinkler system the sprinkler precipitation rate should not exceed the infiltration rate of the soil. Moreover, a correction of the precipita-tion rate is recommended in order to avoid runoff in sloping land. Tables 8 and 9 are commonly used to assess the maximum precipitation rates under various conditions.

Table 10 from Keller and Bliesner (1990) provides more details on suggested maximum sprinkler application rates based on average soil, slope and tilth.

In our case the slope of the land is 0.5% (Figure 4), therefore we do not need precipitation reduction.

Table 8
Maximum precipitation rates to use on level ground

Soil Type Rates (mm/hr)	Maximum Precipitation *
Light sandy soils	18 - 12
Medium textured soils	12 - 6
Heavy textured soils	6 - 2.5

** Rates increase with adequate cover and decrease with land slope and time*

Table 9
Precipitation rates reduction on sloping ground

Slope	Percent Reduction
0 - 5%	0
6 - 8%	20
9 - 12%	40
13 - 20%	60
> 20%	75

Table 10
Suggested maximum sprinkler application rates for average soil, slope, and tilth (Source: Keller and Bliesner, (1990)

	Slope			
	0-5%	5-8%	8-12%	12-16%
	Maximum application rate			
Soil texture and profile	mm/hr	mm/hr	mm/hr	mm/hr
Coarse sandy soil to 1.8 m	50	38	25	13
Coarse sand soils over more compact soils	38	25	19	10
Light sandy loams to 1.8 m	25	20	15	10
Light sandy loams over more compact soils	19	13	10	8
Silt loams to 1.8 m	13	10	8	5
Silt loams over more compact soils	8	6	4	2.5
Heavy textured clays or clay loams	4	2.5	2	1.5

Figure 4
Farm map

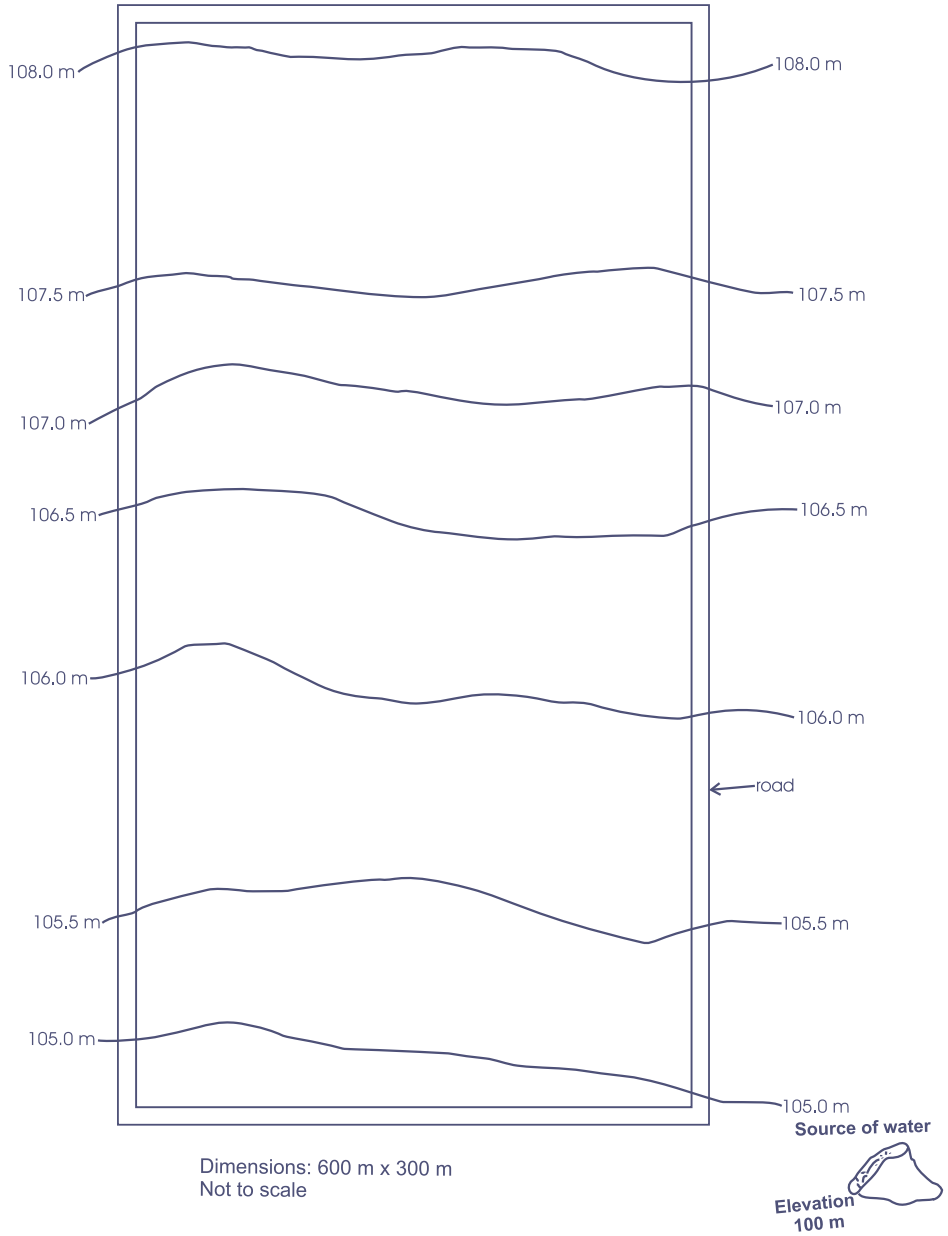

3.2. Layout and final design

The system layout is obtained by matching the potentially acceptable spacings with the dimensions of the field such that as little land as possible is left out of the irrigated area. The layout should also accommodate access roads, drains and other structures such as toilets. The drains are not needed because of the irrigation method (like is the case in surface irrigation schemes), but to protect the scheme from high intensity rainstorms.

The following sections illustrate the design procedure of the following periodic-move systems on our 18 ha (600 m length and 300 m width as shown in Figure 4) field example:

- Semi-portable sprinkler irrigation system for an individual farmer
- Semi-portable sprinkler irrigation system for a smallholder irrigation scheme
- Drag-hose sprinkler irrigation system for a smallholder irrigation scheme

3.2.1. Design of a semi-portable sprinkler irrigation system for an individual farm

Going back to our example, the 15 m x 15 m spacing for the 4.0 mm nozzle operating at 350 kPa pressure and delivering 1.16 m^3/hr at an application rate of 5.16 mm/hr, was accepted as a potential spacing.

The next step is to determine the set time (T_s), which is the time each set of sprinklers should operate at the same position in order to deliver the gross irrigation depth, and establish whether it is acceptable.

Equation 6

$$T_s = \frac{d_{gross}}{P_r}$$

Where:

T_s = set time (hr)

P_r = sprinkler precipitation rate (mm/hr)

Substituting the values in Equation 6 gives:

$$T_s = \frac{61.87}{5.16} = 11.99 \text{ hours}$$

Hence, each set of sprinklers should operate at the same position for 11.99 hours in order to deliver the 61.87 mm gross application per irrigation. If we assume that we are designing a permanent system this would have been ideal because we can have full utilization of our equipment by having two sets per 24 hours. However, if we are designing a semi-portable system, where the laterals have to be moved from one position to the next, there would be no time available to move the laterals between each of the two shifts per day during the peak water demand period. In this case, we have the following choices:

1. To purchase twice the length of operating laterals so that extra laterals are moved while the other laterals are operating, or
2. To re-assess the moisture depletion level, or
3. To use a different sprinkler with the same or different spacing, nozzle, pressure and precipitation rate

As a rule, it is more economical to look into alternative 2 or 3 than to follow alternative 1. Alternative 2 involves re-adjusting the moisture depletion level. The effect will be a re-adjustment of d_{gross} and consequently the set time. In our example, let us assume that during each irrigation we will apply the net equivalent depth to 7 days consumptive use. This would amount to a net application depth of 40.6 mm (7 x 5.8), which is equivalent to 41% (40.6/(140 x 0.7)) soil moisture depletion, with an irrigation frequency of 7 days. Allowing one day for cultural practices, the irrigation cycle would be 6 days. In order to apply the 40.6 mm net per irrigation, the gross application at 75% efficiency should be 54.1 mm (40.6/0.75).

Since the sprinkler precipitation rate is 5.16 mm/hr the sprinklers should operate for 10.5 hours (54.1/5.16) at each set during the peak demand period. With this adjustment more time is allowed (1.5 hours per set) to move the laterals. This makes the 15 m x 15 m acceptable in terms of the set time. It should be pointed out that the standard aluminium pipe lengths come in 9 metres and 6 metres. This means that each lateral will have to be composed of 9 metres and 6 metres pipes or 6 metres and 3 metres pipes. If for simplicity purposes the farmer would prefer to have the same length of pipes throughout each lateral, another spacing should be tested, say the 12 m x 18 m spacing.

The 12 m x 18 m spacing for the 4.0 mm nozzle operating at 350 kPa pressure and delivering 1.16 m^3/hr at 5.37 mm/hr precipitation rate can satisfy this requirement. This combination will be able to deliver the required 61.87 mm (with an 8 day frequency and 7 day cycle) in 11.5 hours or the re-adjusted application depth, 54.1 mm (with a 7 day frequency and 6 day cycle), in 10.0 hours. If the irrigation cycle of 7 days is adopted, then the time available for moving the pipes between each shift, is only 30 minutes. This option necessitates that labour for this purpose be available on Sundays. If the second alternative is adopted more flexibility is available as the system will operate for 6 days per week and a lot of time, 2 hours, is available for moving the pipes between each shift.

These changes will require an over-all re-assessment of the system capacity calculated earlier. It also remains to be seen how each of the two spacings fit the farm layout. After accepting spacings with promising set times, they should then be tried on the topographic map.

When preparing the layout of the system one should adhere to two principles, which are important for the uniformity of water application. Firstly, for the rectangular spacing the laterals should be placed across the prevailing wind direction. Secondly, where possible, laterals should run perpendicular to the predominant slope in order to achieve fairly uniform head losses.

Looking at the farm map (Figure 4), dimensioned at 300 m x 600 m net, and keeping in mind the above principles, it appears that some trade-offs should be made. With the main line placed at the 600 m long eastern boundary of the land, the 15 m x 15 m spacing would require 40 (600/15) lateral positions to cover the total area (Figure 5). Such a layout would permit the completion of irrigation in 5 days (40/(4 x 2)), with 4 laterals operating at a time and 2 shifts per lateral per day. Therefore, the 15 m x 15 m spacing with 4.0 mm nozzles operating at 350 kPa and applying 5.16 mm/hr would deliver the amount of water required for 7 day frequency (7 x 5.8/0.75 = 54.1 mm) in 5 days, with an operation of 2 shifts per day for 10.5 hrs per shift.

The 15 m x 15 m spacing would therefore be a suitable spacing, but from the point of view of the utilization of the invested capital the system would only be utilized for 71% (5 days out of a possible 7 days) of the time, at peak demand.

Figure 5
System layout based on a 15 m x 15 m spacing and long laterals

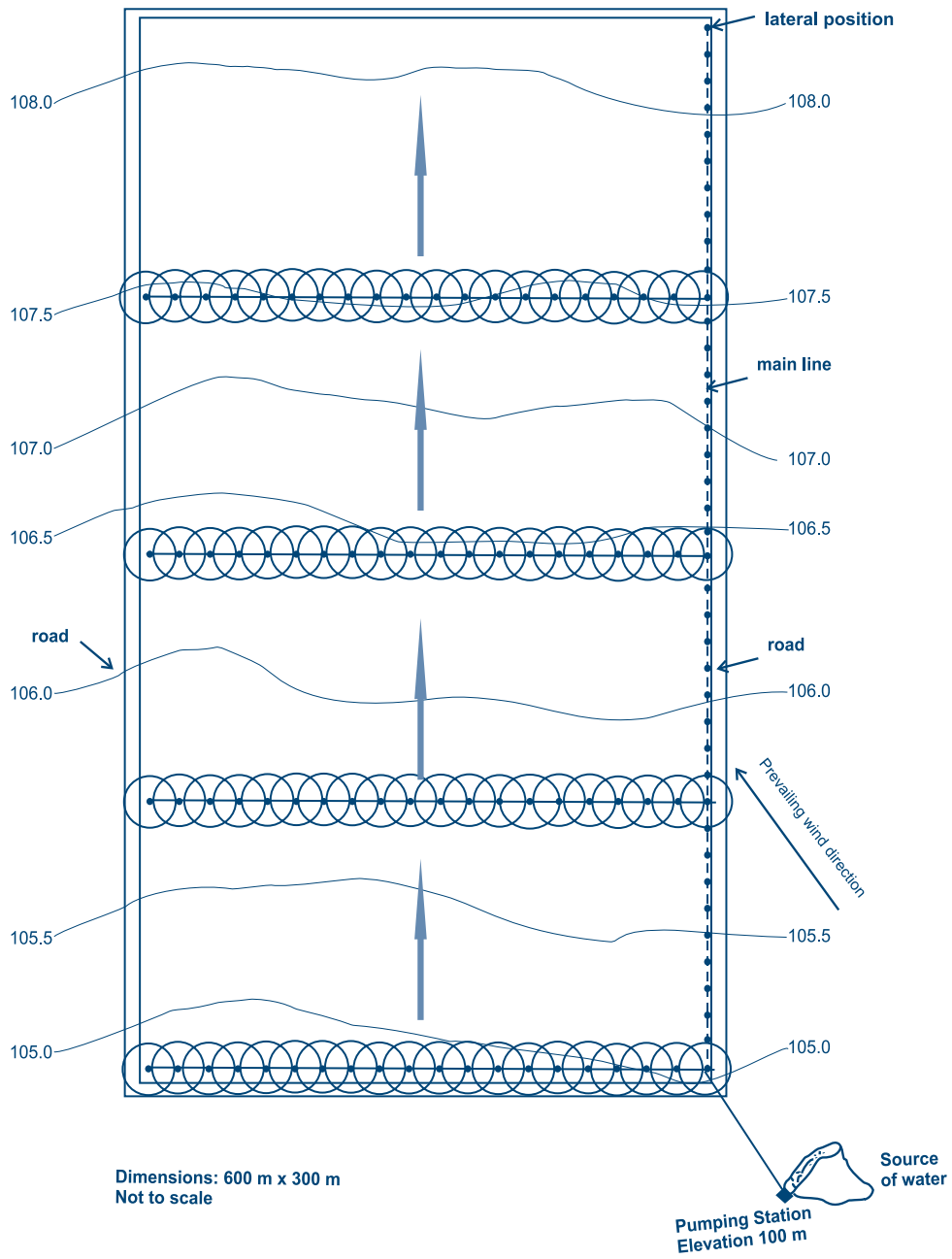

The capacity of such a system can be calculated using Equation 7:

Equation 7

$$Q = N_c \times N_s \times Q_s$$

Where:

Q = system capacity (m^3/hr)
Nc = the number of laterals operating per shift
Ns = the number of sprinklers per lateral
Qs = the sprinkler discharge (from the manu facturer's tables)

N_s is obtained by dividing the length of the lateral by the sprinkler spacing. In this case, the lateral is 300 m and the sprinkler spacing is 15 m, therefore N_s is 20.

Substituting N_c, N_s and Q_s in the equation gives:

$$Q = 4 \times 20 \times 1.16 = 92.8 \text{ m}^3/\text{hr}.$$

In comparison to the optimum theoretical capacity (preliminary system capacity) calculated earlier at 72.3 m^3/hr, for a 7 day cycle, this flow (92.8 m^3/hr) is higher. Higher flows than necessary imply bigger pumping units and larger diameters of pipes, which increase the capital investment required for the system.

Alternatively, if 3 laterals are used per shift and there are 2 shifts per day, the irrigation cycle can be completed in 6.5 (39/(3 x 2)) days, covering 39 positions. Consequently, a strip of land of 0.45 ha (15 m x 300 m) will not be irrigated. This is a more economical approach reducing the number of laterals to 3, and the system capacity to 69.6 m^3/hr (20 x 3 x 1.16). However, this requires labour every day, including Sundays, which is a disadvantage of such a layout. There is a need to compare the 15 m x 15 m spacing with the other potential spacings such as the 12 m x 18 m.

While the main line is maintained at the eastern boundary of the land, let us try to see how the 12 m x 18 m spacing fits (Figure 6). Within the 600 metres length of field, 33.3 (600/18) lateral positions, with 25 (300/12) sprinklers each can fit. If we operate 3 laterals at a time for 2 shifts per day, 33 positions will be covered in 5.5 days (33/(3 x 2)), leaving 0.3 positions not irrigated. If one lateral is used alone for this position then the pressure at the sprinkler nozzle and consequently the discharge will be too high for a uniform water application. Therefore, in order to use this spacing a

Figure 6
System layout on a 12 m x 18 m spacing and long laterals

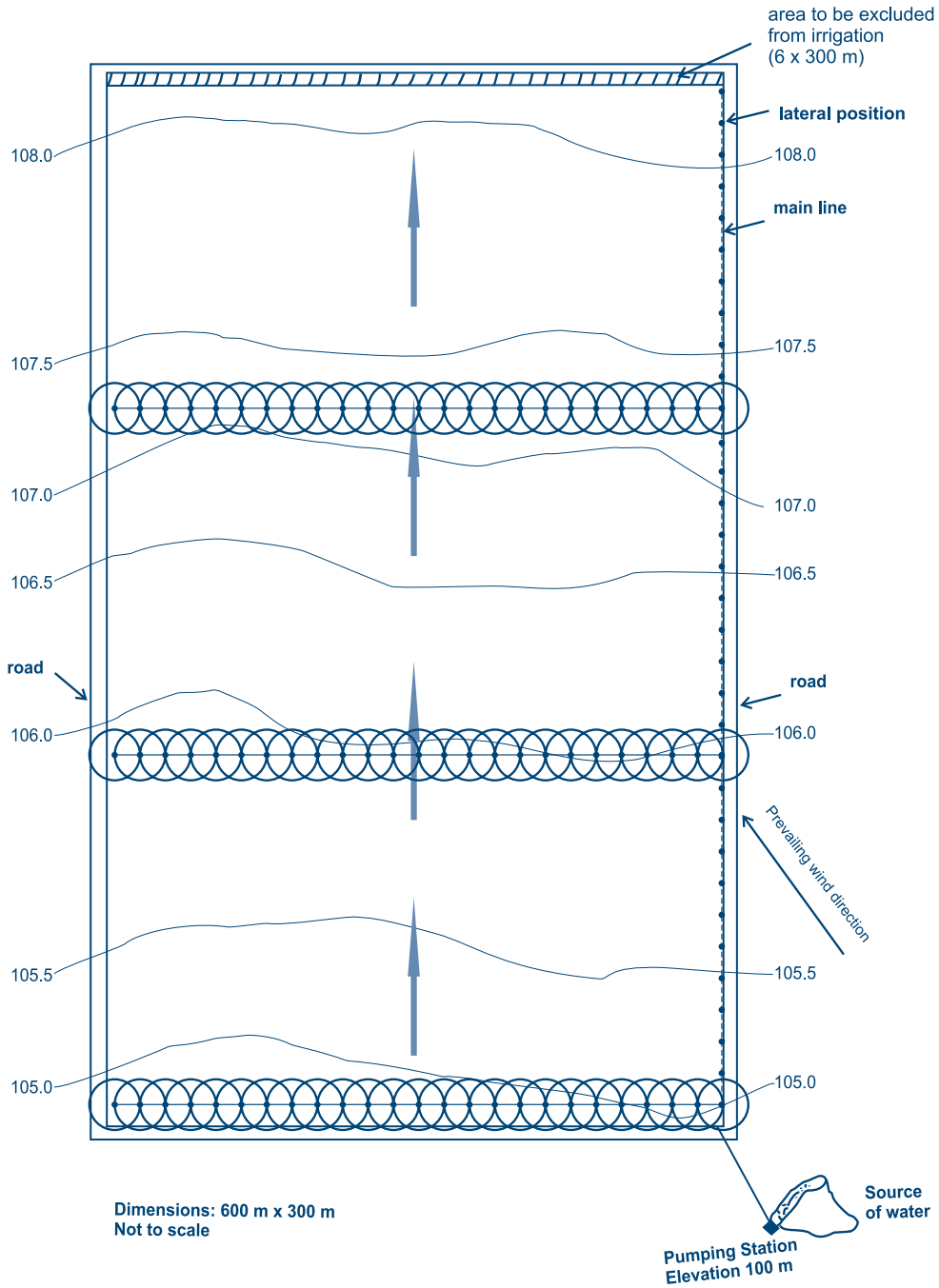

strip of land of 6 m wide and 300 m long would have to be excluded from irrigation, resulting in a reduction of the area by 0.18 ha. Such a layout would result in a system capacity of 87 m^3 /hr (3 x 25 x 1.16).

Therefore, the farmer and the designer would have to choose between: (a) a layout of 15 m x 15 m that can cover the whole area at a higher cost per unit area and also with laterals composed of 6 m and 3 m lengths of pipes, (b) a layout of 15 m x 15 m that reduces the cost but also reduces the area by 0.45 ha and (c) a layout based on 12 m x 18 m with moderate cost, convenience in operation (laterals are composed of 6 m lengths) and able to complete irrigation in 5.5 days per week but reducing the area by 0.18 ha.

Assuming that for practical and economic reasons the farmer agreed to adopt the 12 m x 18 m spacing and lose a small strip of land, he/she is still faced with another practical problem with both approaches. After all, when the laterals reach the last position they have to be returned to the first position. This would require the transport of 900 (300 x 3) metres of pipes for a distance of 198

Figure 7

System layout based on a 12 m x 18 m spacing and short laterals

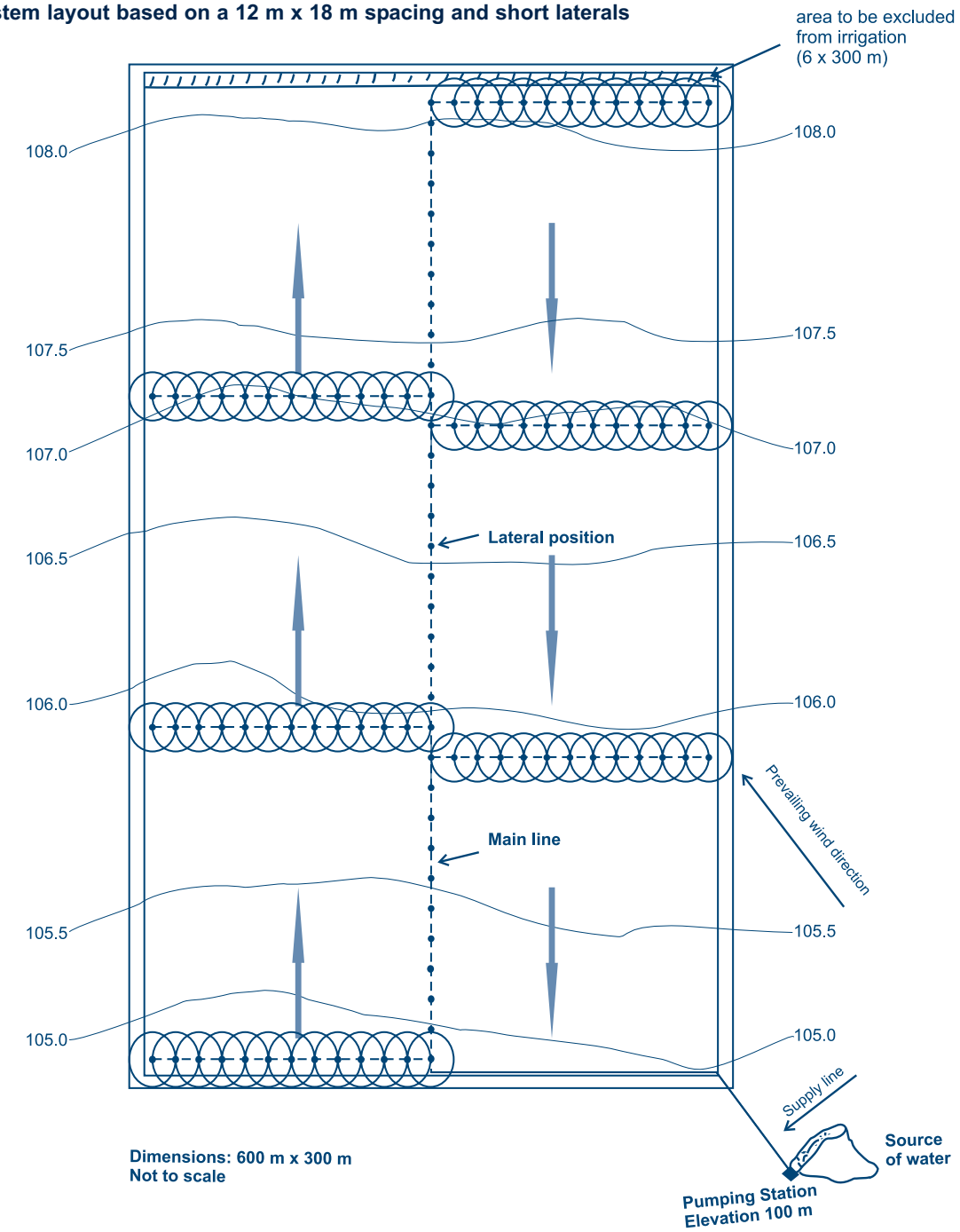

(11 x 18) metres in the case of the 12 m x 18 m spacing, or 1200 (300 x 4) metres of pipes for a distance of 150 (10 x 15) metres in the case of 15 m x 15 m spacing.

A more favourable arrangement from the operational point of view can be attained by locating the main line in the middle of the plot and in parallel to the length of the field. Such a layout will permit the rotation of the laterals around the mainline (Figure 7).

In this case the adopted spacing (12 m x 18 m) would require 3 short laterals with 13 sprinklers each and another 3 short laterals with 12 sprinklers each operating at the same time in order to complete the 66 lateral positions in 5.5 days {66 positions/(6 laterals x 2 shifts/day)} with the same flow (Q = 87.0 m^3/hr).

Basically, the choice will depend on the economics. One can compare costs to establish whether the savings obtained using smaller diameter laterals can compensate, and to what extent, for the additional cost of main pipe to transport the water from the edge of the farm to the middle point of the southern border.

Table 11 shows a summary of the comparisons between the different sprinklers and their spacings that were considered in the preceding sections.

If we assume that the short lateral approach is more economical then the layout should look as shown in Figure 7. Once the sprinkler spacing and the in-field irrigation layout are determined, the next stage of the design is to size the pipes.

Table 11
Summary of sprinkler size and spacing options

Nozzle Size (mm)	Pressure (kPa)	Wetted Diameter (m)	Spacing (m)	Wind Requirement			Soil Infiltration Rates versus Precipitation rate (mm/hr)	Suitability
				Square	Rectangular	Comments	Comments (m)	Comments (m)
4.0	350	30.50	15 m x 15 m	15.25		Spacing OK, wind speed 6-11km/hr	OK Pr = 5.16	P/S, Set time OK, Reduces area by 0.45 ha
4.0	350	30.50	12 m x 18 m		12.2 x 18.3	Spacing OK, wind speed 10-15km/hr	OK Pr = 5.37	P/S, Set time OK, Long laterals not OK, Short laterals OK. Option adopted
4.0	300	26.60	15 m x 15 m	13.3		Spacing NOT OK	OK Pr = 4.60	Does not satisfy wind requirement (spacing too large)
4.0	300	26.60	12 m x 18 m		10.64 x 15.96	Spacing NOT OK	OK Pr = 5.00	Does not satisfy wind requirement (spacing too large)
5.0	350	34.30	18 m x 18 m	17.65		Spacing NOT OK	OK Pr = 5.68	Does not satisfy wind requirement (spacing too large)
5.0	300	33.00	18 m x 18 m		13.2 x 19.8	Spacing NOT OK	OK Pr = 5.25	Does not satisfy wind requirement (spacing too large)
5.0	350	34.30	12 m x 18 m		13.72 x 19.8	Spacing OK	Pr = 8.52> infiltration rate	Does not satisfy precipitation requirement (Pr too large)
5.0	300	33.00	12 m x 18 m		13.2 x 19.8	Spacing OK	Pr = 7.87> infiltration rate	Does not satisfy precipitation requirement (Pr too large)
5.0	350	34.30	15 m x 15 m	17.65		Spacing OK	Pr = 8.18> infiltration rate	Does not satisfy precipitation requirement (Pr too large)
5.0	300	33.00	15 m x 15 m	17.65		Spacing OK	Pr = 8.18> infiltration rate	Does not satisfy precipitation requirement (Pr too large)

P/S means potential spacing for adoption

Allowable pressure variation

Pressure differences throughout the system or block or sub-unit should be maintained in such a range so that a high degree of uniformity of water application is achieved.

Addink *et al* (1989) and Keller (1989) suggest that for practical purposes the allowable pressure loss due to friction can be estimated at 23.4% of the required average pressure. For the same reason, the friction losses in the lateral should be kept to a minimum. Other sources suggest that allowable pressure variation should not exceed 20% of the sprinkler operating pressure. In our example, of the 12 m x 18 m spacing for the 4.0 mm nozzle operating at 350 kPa, the allowable pressure variation in the system should not exceed 20% of the sprinkler operating pressure, which is 70 kPa (350 x 0.2) or 7 metres.

Pipe size determination

Pipe size determination involves selecting the diameter of a pipe type, which can carry a given flow at or below the recommended velocity limit. For example, the velocity limit for uPVC pipes is about 2 m/s. Also, depending on the water pressure, different classes of pipes can be selected for the same pipe type. uPVC pipes come in pressure ratings of 40 metres (Class 4), 60 metres (Class 6), 100 metres (Class 10) and 160 metres (Class 16). If, for example, the water pressure at a pipe section is 30 metres and uPVC pipe is being used, then a pipe rated at class 4 should be selected. There are a number of different types of pipes. The engineer should consider what pipes are available on the market and their costs. Manufacturers provide friction loss charts, such as those in Figures 8-11, which can be used in sizing the pipes.

Laterals

Laterals in a semi-portable system are aluminium pipes with multi-outlets (sprinklers) along their length. The friction losses, either calculated or obtained from charts, have to be corrected since the flow reduces along the lateral. This is done by using Christiansens adjustment factor "F". Table 12 shows Christiansens F values for velocity exponent m = 2.0, most commonly used in sprinkler irrigation systems. Alternatively, the friction losses in every segment of the pipe can be calculated using the relevant charts for corresponding flow for each section.

Table 12

Christiansens "F" factors for various numbers of outlets (Source: Keller and Bliesner, 1990)

Number of outlets	F for m = 2.0	Number of outlets	F for m = 2.0
1	1.000	14	0.370
2	0.625	15	0.367
3	0.518	16	0.365
4	0.469	17	0.363
5	0.440	18	0.361
6	0.421	19	0.360
7	0.408	20	0.359
8	0.398	21	0.357
9	0.391	22	0.355
10	0.385	23	0.353
11	0.380	24	0.351
12	0.376	25	0.350
13	0.373		

m is the velocity exponent of Scobey's formula

Example 5

Going back to the example, where the mainline is located at the middle of the field, the maximum length of the lateral is 150 metres. It will have 13 sprinklers operating at the same time, delivering 1.16 m^3/hr each at 350 kPa pressure. Therefore the flow at the beginning of the lateral will be:

Q = 13 x 1.16 = 15.08 m^3/hr.

According to the friction loss chart for aluminium laterals (Figure 8) a 76 mm diameter pipe would have a friction loss of 1.3 m per 100 m of pipe (1.3%). If the pipe was just a blind pipe (i.e. without multi-outlets) then the friction loss for a discharge of 15.08 m^3/hr would be:

HL = 0.013 x 150 = 1.95 m

By taking into consideration the "F" factor corresponding to 13 outlets (sprinklers),

HL = 0.013 x 150 x 0.373 = 0.73 m

If instead of 76 mm, 63 mm pipe is used then

HL = 0.033 x 150 x 0.373 = 1.85 m

Assuming that each valve hydrant (Figure 12) would serve 3 lateral positions (one on each side of the hydrant and one at the hydrant), then the friction losses for the 18 m aluminium pipe (header) with a flow of 15.08 m^3/hr should be included in the friction losses for the lateral:

HL = 0.013 x 18 = 0.23 m for the 76 mm pipe.

Therefore the total friction losses in the 76 mm lateral, when the header is used, are 0.96 m (0.73 + 0.23).

If the 63 mm pipe is used the friction losses in the header will be

HL = 0.033 x 18 = 0.59 m

Therefore, the total friction losses in the 63 mm lateral, when the header is used, will be 2.44 m (1.85 + 0.59)

Figure 8

Head losses in aluminium pipes

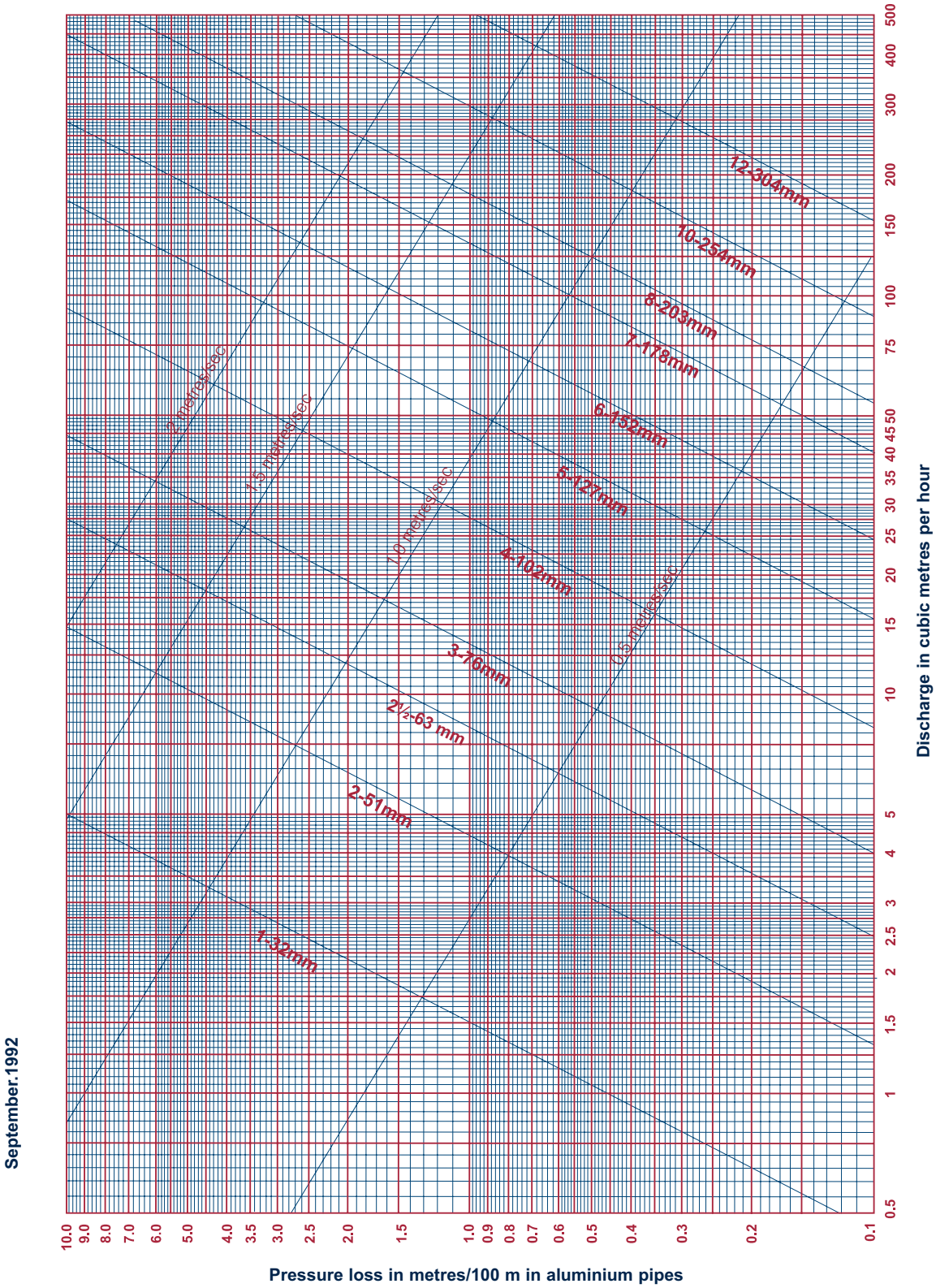

September.1992

Figure 9

Friction loss chart for uPVC pipes (Source: South African Bureau of Standards, 1976)

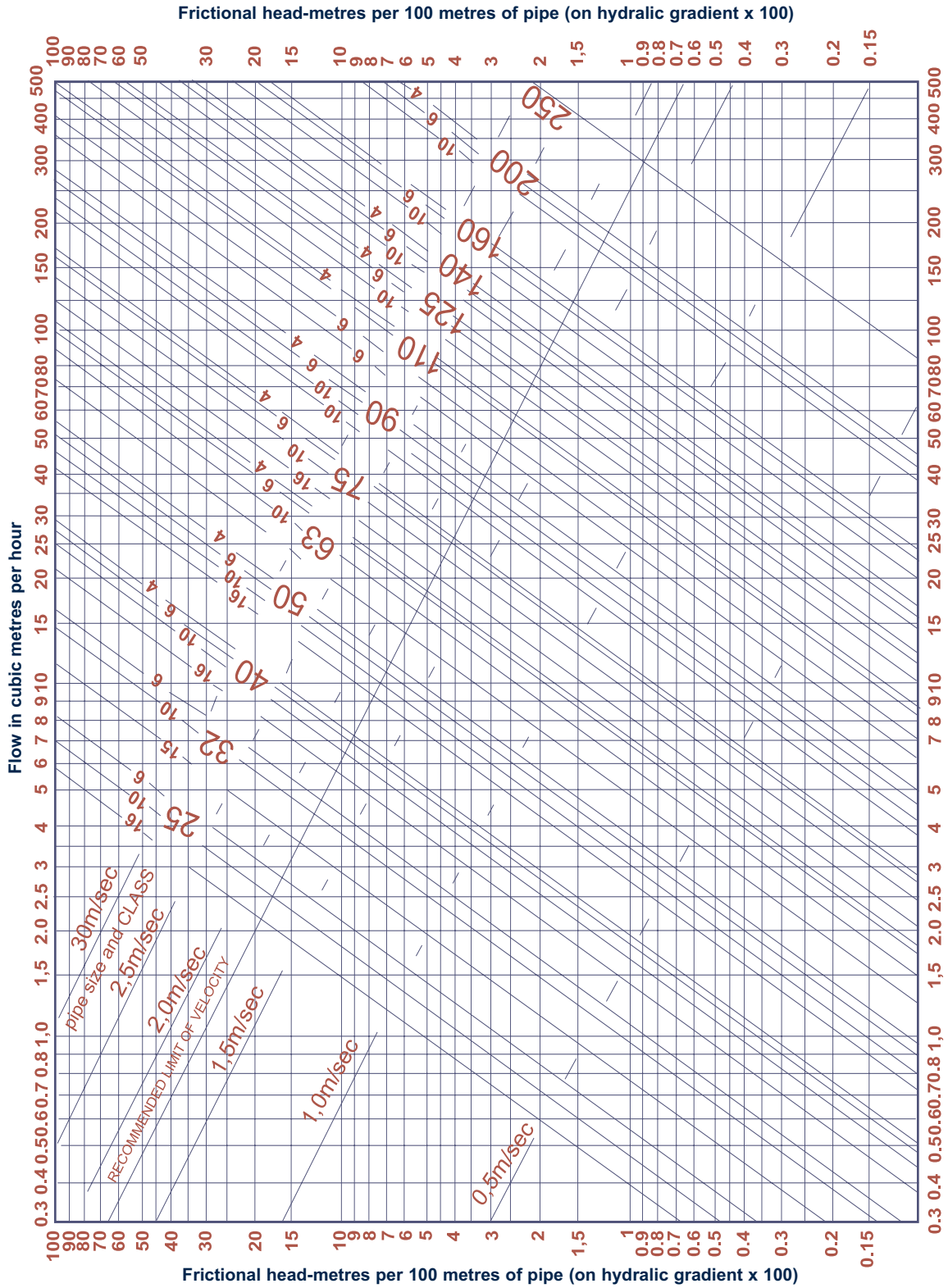

Figure 10
Friction loss chart for AC pipes (Class 12)

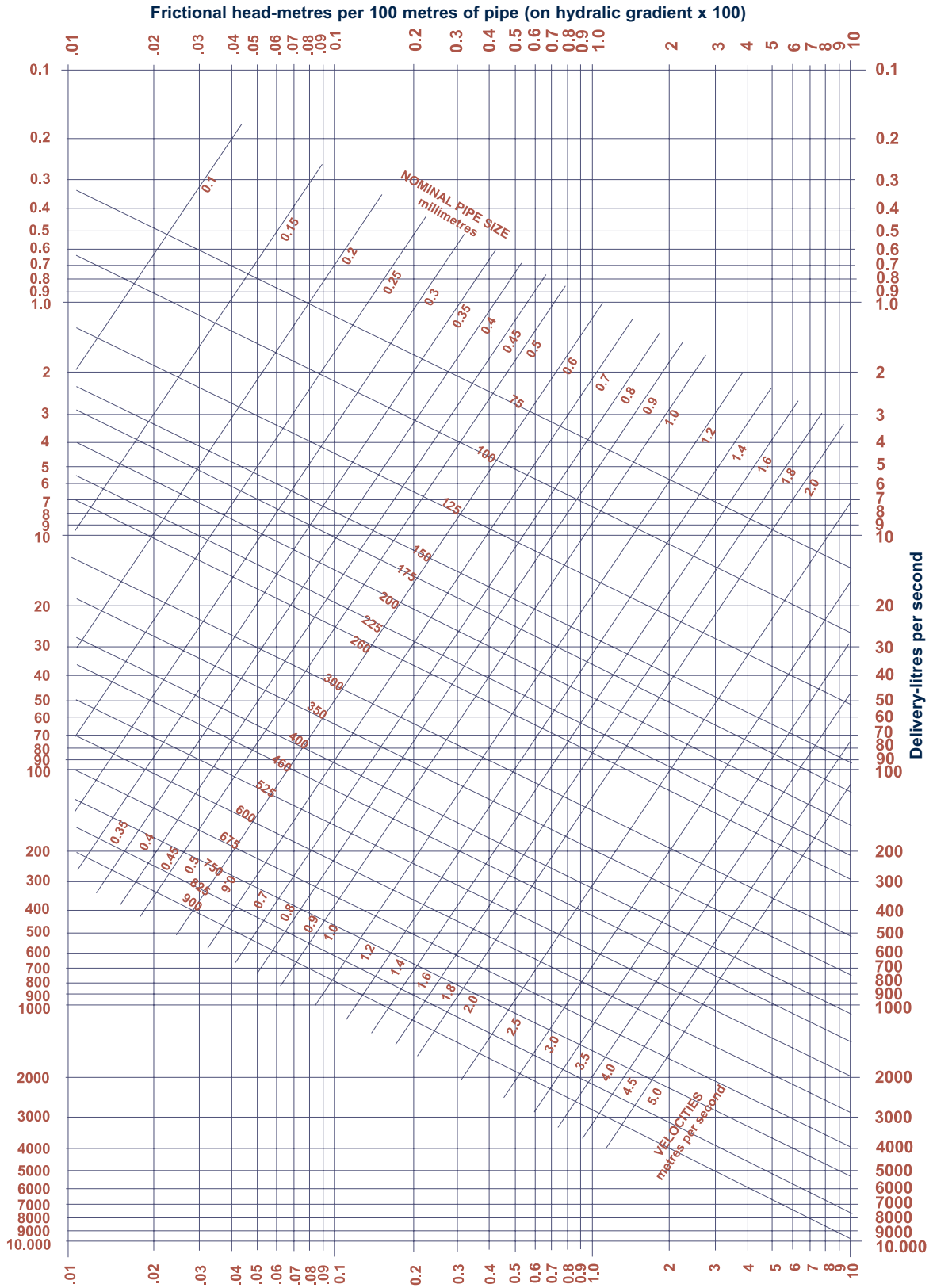

Figure 11
Friction loss chart for AC pipes (Class 18)

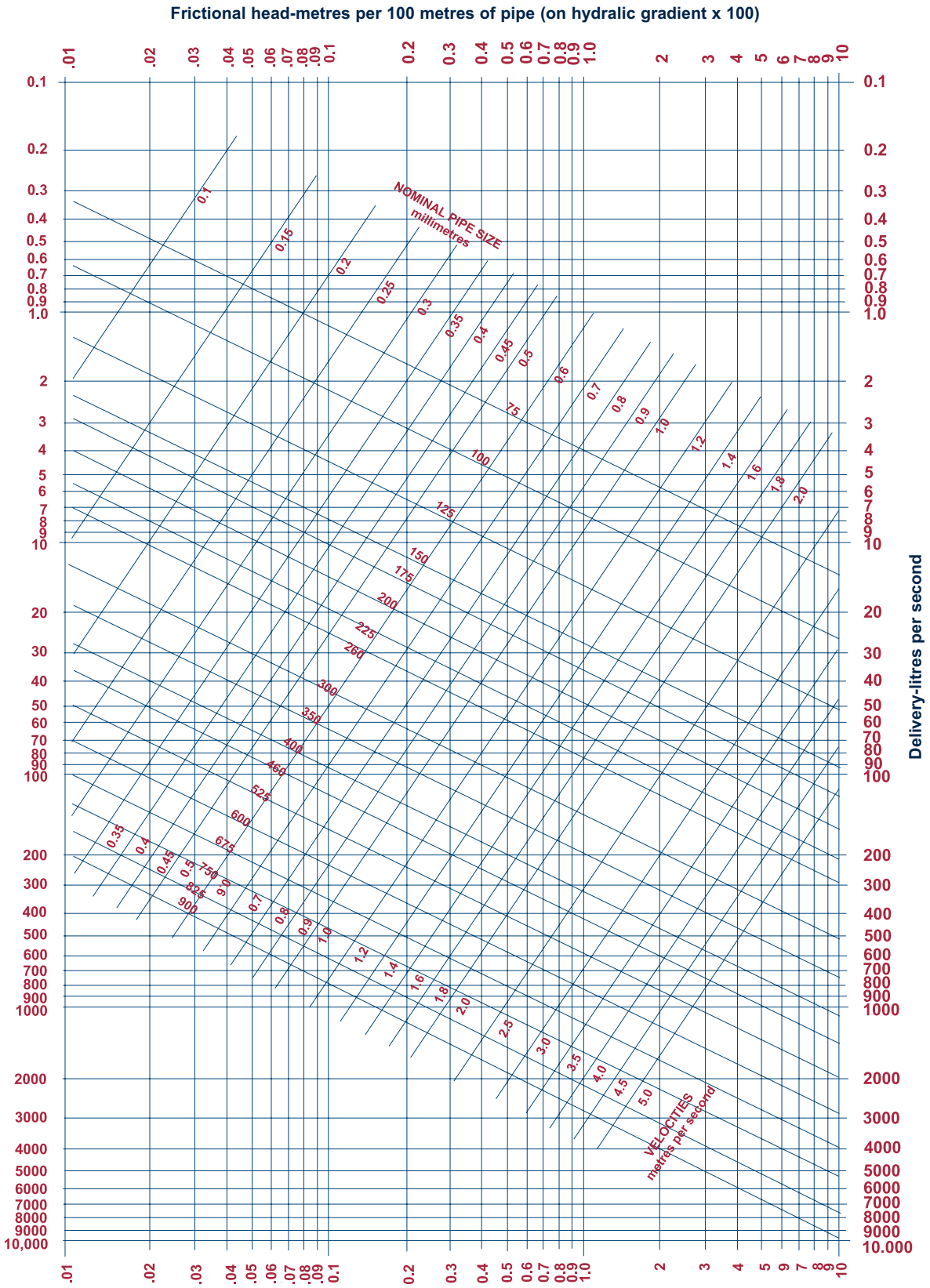

Main Line

It is necessary to know some characteristics of some of the pipes commonly used in irrigation, unplasticized Polyvinylchloride (uPVC) pipes and Asbestos-cement (AC) pipes. AC pipes are no longer recommended for use in domestic water supply systems, because of the health hazard to workers in the manufacturing and installation of these pipes as well as the public at large. Therefore, especially where the main supply line is integrated with a domestic water supply, AC pipes should not be used.

The pressure within any part of the pipe network should not exceed the working pressure of that pipe, in order to comply with established standards. This should be kept in mind when selecting pipe sizes for frictional loss calculations. In addition, the recommended maximum velocities (2 m/s) should not be exceeded.

AC pipes normally come in 4 metres lengths. Seven different classes of asbestos cement pipes are usually manufactured (Table 13). The most common sizes are 50-900 mm nominal diameter, even though larger sizes can be manufactured. Each pipe length is marked with the size and class of the pipe.

While the class 6 pipe is used for surface irrigation the most commonly used classes for pressurized irrigation systems are the classes 12, 18 and 24. All AC pipes and fittings are only recommended for underground installation, as they can easily be damaged or dislocated by, for example traffic, agricultural implements and animals.

Table 13

Asbestos-cement pipe classes and corresponding pressure rating

Class	Working Pressure (kPa)	Test Pressure (kPa)
6	300	600
12	600	1 200
18	900	1 800
24	1 200	2 400
30	1 500	3 000
36	1 800	4 200
42	2 100	4 200

Note:
Working pressure is the maximum pressure that can be exerted on the pipe by the water continuously, with a high degree of certainty that the pipe will not fail. Test pressure is the pressure at which each pipe is tested and this is usually twice the working pressure.

Table 14

uPVC pipe classes and corresponding working pressure rating (Source: South African Bureau of Standards, 1976)

Class	Working Pressure (kPa)
4	400
6	600
10	1 000
16	1 600

uPVC pipes normally come in 6 metres lengths. The most commonly available uPVC pipes fall in 4 to 16 pressure classes shown in Table 14. The most common sizes range from 25 mm to 250 mm in diameter.

Going back to our example, the position of each lateral affects the friction losses in the main line since it affects the flow at the different sections of the main line. Therefore, friction losses corresponding to different alternative positions of the laterals (Figure 12) should be analyzed. As a rule, the highest friction losses in the main occur when all laterals operate in the middle position, which is position 6 in our example (Figure 12). This rule does not hold true always. Therefore, the friction losses in the main are calculated for the first, middle and last positions. Of the three calculations, the highest is used for the compilation of the total head losses and the selection of the relevant pipe class.

Using the frictional loss chart for uPVC pipes (Figure 9), the friction losses of the main line can be calculated as shown below. For asbestos cement (AC) pipes, use the charts of Figure 10 or 11.

Q = the discharge or flow rate within that section of the pipe, the units depending on the chart being used (in this case m^3/hr)

L = the length of pipe for that section (m)

D = the pipe size diameter (mm)

HL = the friction loss of the pipe (m)

Pipe class shows the working pressure of the pipe, not to be exceeded in that section.

The frictional loss charts also show the recommended maximum velocities of flow in the pipes. The smaller the velocity, the less the head loss per unit length of pipe. The higher the flow, the higher the friction loss per unit length and the more it is turbulent. This leads to the possibility of higher internal wear of the pipe and possibility of water hammer, when the system is shut down suddenly.

Figure 12

System layout and pipe sizing based on a 12 m x 18 m spacing and short laterals (first attempt at pipe sizing)

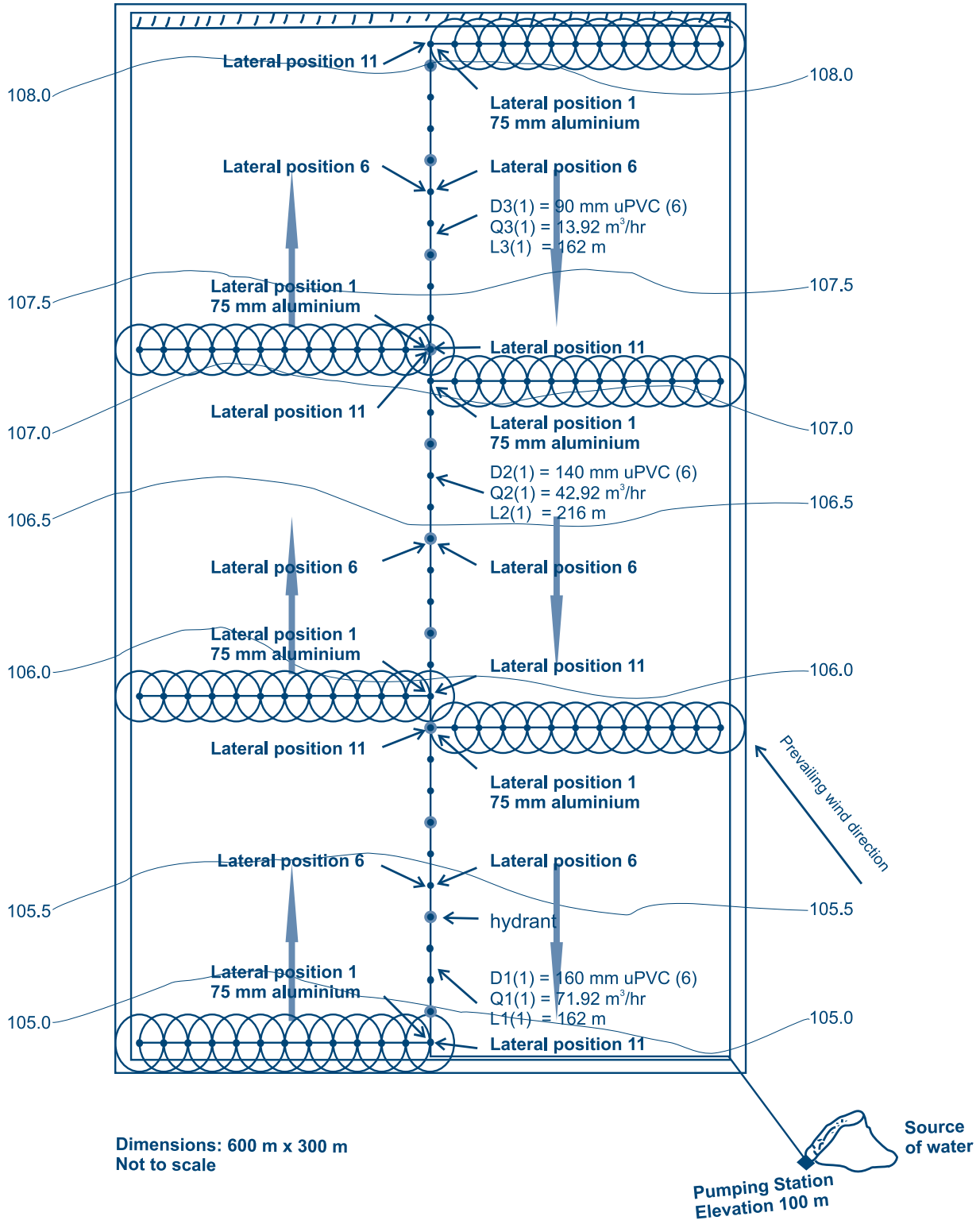

Back to our example, the friction losses of positions 1 and 11 are identical, being mirror images of each other. It suffices therefore to calculate the friction losses of positions 1 and 6.

Example 6

Position 1

As a guideline in selecting the class of a pipe to be used, it is suggested that the sum of the difference in elevation, sprinkler operating pressure, allowable pressure variation and lateral friction losses is used. In our example:

- difference in elevation = 3.5 metres (108-104.5)

- sprinkler operating pressure = 35 metres

- 20% allowable pressure variation = 0.2 x 35 = 7 metres

- lateral friction losses = 0.96 metres

The total of 46.46 (3.5 + 35 + 7 + 0.96) metres, exceeds the pressure rating of class 4 uPVC pipe, which is 40 metres, obliging the use of the next class of pipe, which is class 6.

Qtotal = 87 m^3/hr (system capacity)
Q1(1) = 87 - (13 x 1.16) = 71.92 m^3/hr
L1(1) = 162 m (distance between hydrants 1 and 4)
D1(1) = 160 mm class 6 uPVC
HL1(1) = 0.006 x 162 = 0.97 m

Q2(1) = 71.92 - (12 x 1.16) - (13 x 1.16) = 42.92 m^3/hr
L2(1) = 216 m (distance between hydrants 4 and 8)
D2(1) = 140 mm class 6 uPVC
HL2(1) = 0.005 x 216 = 1.08 m

Q3(1) = 42.92 - (13 x 1.16) - (12 x 1.16) = 13.92 m^3/hr
L3(1) = 162 m (distance between hydrants 8 and 11)
D3(1) = 90 mm class 6 uPVC
HL3(1) = 0.006 x 162 = 0.97 m

The figure between brackets refers to the lateral position.

Q1(1) = discharge of the first section of the mainline at lateral position 1, up to hydrant 4
Q2(1) = discharge of the second section of the mainline at lateral position 1, between hydrant 4 and 8
Q3(1) = discharge of the third section of the mainline at lateral position 1, from hydrant 8 to the end

Adding up, the friction loss figures gives HL (main) = 3.02 m (0.97+.08 + 0.97). The difference in elevation between position one of the 1st lateral and position one of the 4th lateral is 3.5 m.

In our example, the sprinkler operating pressure (SOP) is 35 metres. Therefore the total allowable pressure variation should not exceed 7.0 m (i.e. 20% of SOP = 35 x 0.2). The calculated friction losses of lateral (including header), 0.96 m, and of main, 3.02 m, plus the difference in eleva-tion of 3.5 m add up to 7.48 m. Therefore, changes in some segments of the main are necessary, so that we can save at least 0.48 m from the friction losses and maintain the 7.0 m total allowable pressure variation

By increasing the size of the first segment of the main to 200 mm (HL = 0.0026 x 162 = 0.41 m) 0.56 m of head is saved. This will satisfy the requirements, as the overall head is now 6.92 m (7.48 - 0.56).

Now we need to confirm the suitability of these pipe sizes for position 6.

Example 7

Position 6

Let us see what the losses are in this position. How would the selected sizes of the main line satisfy the allowable pressure variation?

Q1(6) = 87 m^3/hr
L1(6) = 54 m (distance between hydrants 1 and 2)
D1(6) = 200 mm uPVC (6)
HL1(6) = 0.0035 x 54 = 0.19 m

Q2(6) = 87 - 29 = 58 m^3/hr
L2(6) = 108 m (distance between hydrants 2 and 4)
D2(6) = 200 mm uPVC (6)
HL2(6) = 0.0017 x 108 = 0.18 m

Q2(6) = 58 m^3/hr
L2(6) = 108 m (distance between hydrants 4 and 6)
D2(6) = 140 mm uPVC (6)
HL2(6) = 0.009 x 108 = 0.97 m

Q3(6) = 58 - 29 = 29 m^3/hr
L3(6) = 108 m (distance between hydrants 6 and 8)
D3(6) = 140 mm uPVC (6)
HL3(6) = 0.0027 x 108 = 0.29 m

Q3(6) = 29 m^3/hr
L3(6) = 108 m (distance between hydrants 8 and 10)
D3(6) = 90 mm uPVC (6)
HL3(6) = 0.023 x 108 = 2.48 m

The figure in brackets refers to the lateral position.

Q1(6) = discharge of the first section of the mainline at lateral position 6, up to hydrant 2

Adding up, the friction losses for the mainline HL (main) are 4.11 m. The difference in elevation is 2.5 m and the lateral and header friction losses are 0.96 m. Adding up these figures gives a total head losses of 7.57 m, which is still beyond the limit of 7 m. Therefore we still need another change. Let us change the last section of the main from 90 mm to 110 mm. Then for that part:

HL = 0.008 x 108 = 0.86 m.

Thus the friction losses of the mainline are now 2.49 m, down from 4.11 m and the total head loss is 5.95 m.

Hence, the total friction losses plus the difference in elevation are below the permissible limit of 7 m. The selected pipe sizes are shown in Figure 13.

Total head requirements

The total head requirements are composed of the pump suction lift, the friction losses in the supply line, the friction losses in the main, lateral and fittings, the riser, the sprinkler operating pressure and the difference in elevation.

The suction lift is the difference in elevation between the water level and the eye of the pump impeller plus the head losses in the suction pipe. The head losses of the suction pipe comprise the frictional losses of the pipe, fittings and the velocity head. The friction losses of the suction pipe are insignificant compared to the velocity head, if the pipe is short.

The velocity head is equal to $\frac{V^2}{2g}$

Where:
v = water velocity (m/s)
g = acceleration due to gravity (9.81 m/s^2)

Figure 13

System layout and pipe sizing based on a 12 m x 18 m spacing and short laterals (after modifications to meet the allowable pressure variations)

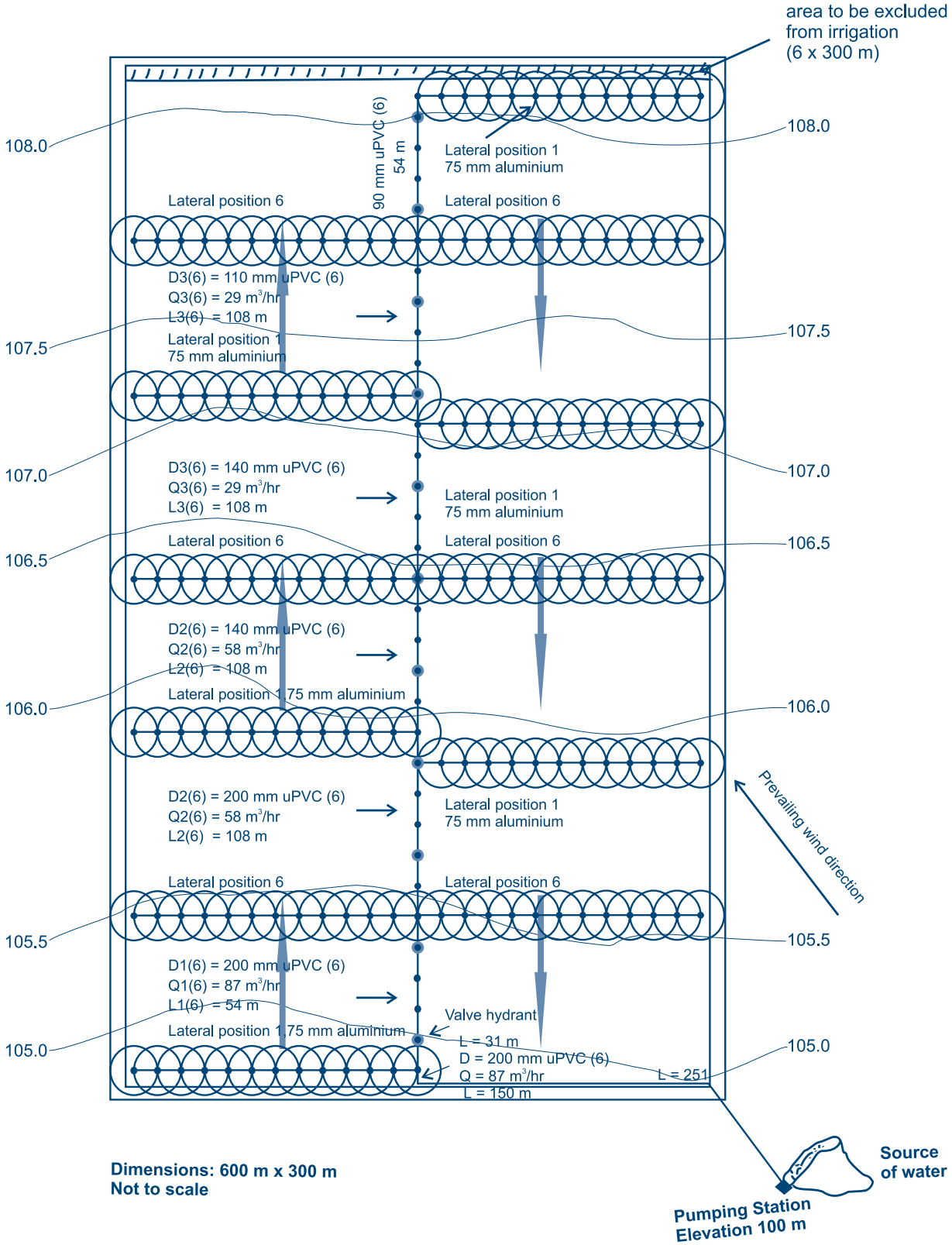

Keller and Bliesner (1990) recommend that for centrifugal pumps the diameter of the suction pipe should be selected such that the water velocity $v < 3.3$ m/s in order to ensure good pump performance. Assuming this maximum velocity for the flow and applying the above formula, then the velocity head corresponding to the minimum diameter of the suction pipe that can be selected to satisfy this condition is 0.56 m ($3.3^2/(2 \times 9.81)$).

In our example, assuming that the water level is at 99 m, the difference in elevation between the water and the eye of the impeller (located at 100 m) is 1 m. Since the maximum velocity head is 0.56 m, the suction lift is 1.56 m (1 + 0.56). Assuming minor losses in fittings and a short suction pipe, the suction lift is rounded up to 2 m.

The difference in elevation is the difference between the ground level of the sprinkler, located at the highest point, and the eye of the pump impeller. This is obtainable from the contour map and is approximately 8 m (108 - 100), (Figure 13).

The length of the supply line is 251 m (70 m from pumping station to field edge plus 150 m from field edge to the middle of the field, plus 4 m for the road, plus 27 m to the first hydrant. The friction losses for the supply line are computed as follows:

Q = 87 m^3/hr
L = 251 m
D = 200 mm

HL = 0.0035 x 251 = 0.88 m

For friction losses in the riser we can assume about 0.25 m per m of riser and for fittings we usually take 10% of the total head losses. Additionally, the height of the riser should be included in the calculations. This is assumed to be 2 metres in our example, to cater for tall crops such as maize.

In the example, the total head requirements would be as shown in Table 15.

Table 15

Total dynamic head requirements for a semi-portable system for an individual farm of 18 ha

Total Dynamic Head Component	Head Loss (m)
Suction lift	2.00
Supply line	0.88
Main line	2.49
Lateral	0.96
Riser	2.50
Sprinkler Operating Pressure (SOP)	35.00
Subtotal	**43.83**
Fittings 10%	4.38
Elevation difference	8.00
TOTAL	**56.21**

Pump selection and power requirements

The next item to be dealt with in a design is the selection of the pump and power plant. From the manufacturers charts, a pump which should provide the desired head and flow at the highest possible efficiency and an electric motor to drive the pump should be selected. Also of great importance in the selection of a pump is that the Net Positive Suction Head Available (NPSHA) exceeds the Net Positive Suction head Required (NPSHR) by the pump.

The basic formula for power requirement (kW or BHP), calculations is provided below:

Equation 8

$$\text{Power requirement in BHP} = \frac{Q \times TDH}{273 \times E_p}$$

or

Equation 9

$$\text{Power requirement in kW} = \frac{Q \times TDH}{360 \times E_p}$$

Where:

kW or BHP	=	energy transferred from the pump to the water
Q	=	discharge (m^3/hr)
TDH	=	total dynamic head (m)
E_p	=	the pump efficiency (%) from the pump performance chart
360 and 273	=	conversion constants for metric units.

It should be noted that this formula is an expression of the actual power required at the pump.

For our example:

$$\text{Power requirements in BHP} = \frac{87 \times 56.21}{273 \times 0.6} = 29.86$$

or

$$\text{Power requirements in kW} = \frac{87 \times 56.21}{360 \times 0.6} = 22.64$$

Depending on the losses in transferring the power to the pump, an allowance of 20% should be made, thus an engine of 35.83 HP (2.01 HP/ha) or 27.17 kW (1.53 kW/ha) should be ordered. Depending on the manufacturer and market availability, the next larger size of motor or engine should be obtained.

3.2.2. Design of a semi-portable sprinkler irrigation system for a smallholder scheme

Smallholder irrigation schemes are here defined as irrigation schemes of any size in which individual farmers have small plot holdings. Most of the irrigation infrastructure, such as

pumping units, mainlines, secondary lines and tertiaries is communally operated. Depending on the design, even laterals and sprinklers could be communally operated.

In some cases semi-portable sprinkler systems designed for smallholder irrigators were designed as if they were to serve commercial farms and the land was sub-divided into small holdings and allocated to communal farmers. However, because of the communal use of laterals among many plot holders and the resultant lack of accountability for damages, replacement of laterals every 4-5 years is not uncommon. Under careful handling aluminium laterals have a life expectancy of 15 years. Also since smallholders as a rule grow 2-4 crops per season these systems were not providing for optimum irrigation as they were designed for monoculture.

The approach described below is based on the principle that each plot holder will have his/her own in-field irrigation equipment (laterals, sprinklers and risers) to serve 3-4 crops per sea-son. The rest of the equipment remains communally operated. Countries that have such schemes include Zimbabwe, Kenya, Swaziland and South Africa.

Sprinkler selection and spacing

Referring to Figure 4, the 18 ha plot (300 m x 600 m) can be sub-divided into 32 plots of approximately 0.5 ha each, allowing for road access to each plot from all sides (Figure 14). If plots of 70 m x 72 m are demarcated, then a strip of land of 12 m x 300 m will remain unutilized, when 4 metres wide strips, consisting of in-field roads and surface drains, are incorporated into the layout. Alternatively, 72 m x 72 m

Figure 14
Plot layout in a smallholder scheme

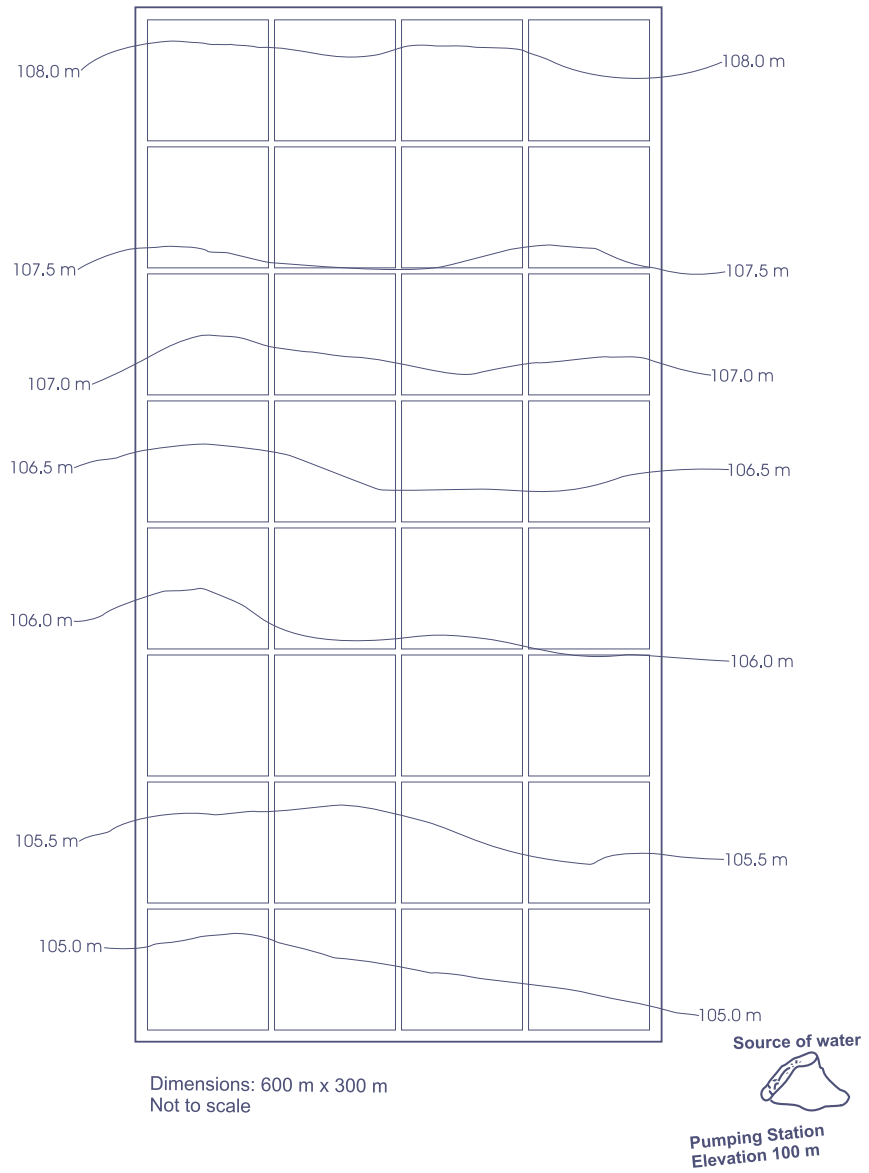

Figure 15

System layout based on 12 m x 12 m spacing with tertiaries serving two plots (semi-portable) (first attempt for pipe sizing)

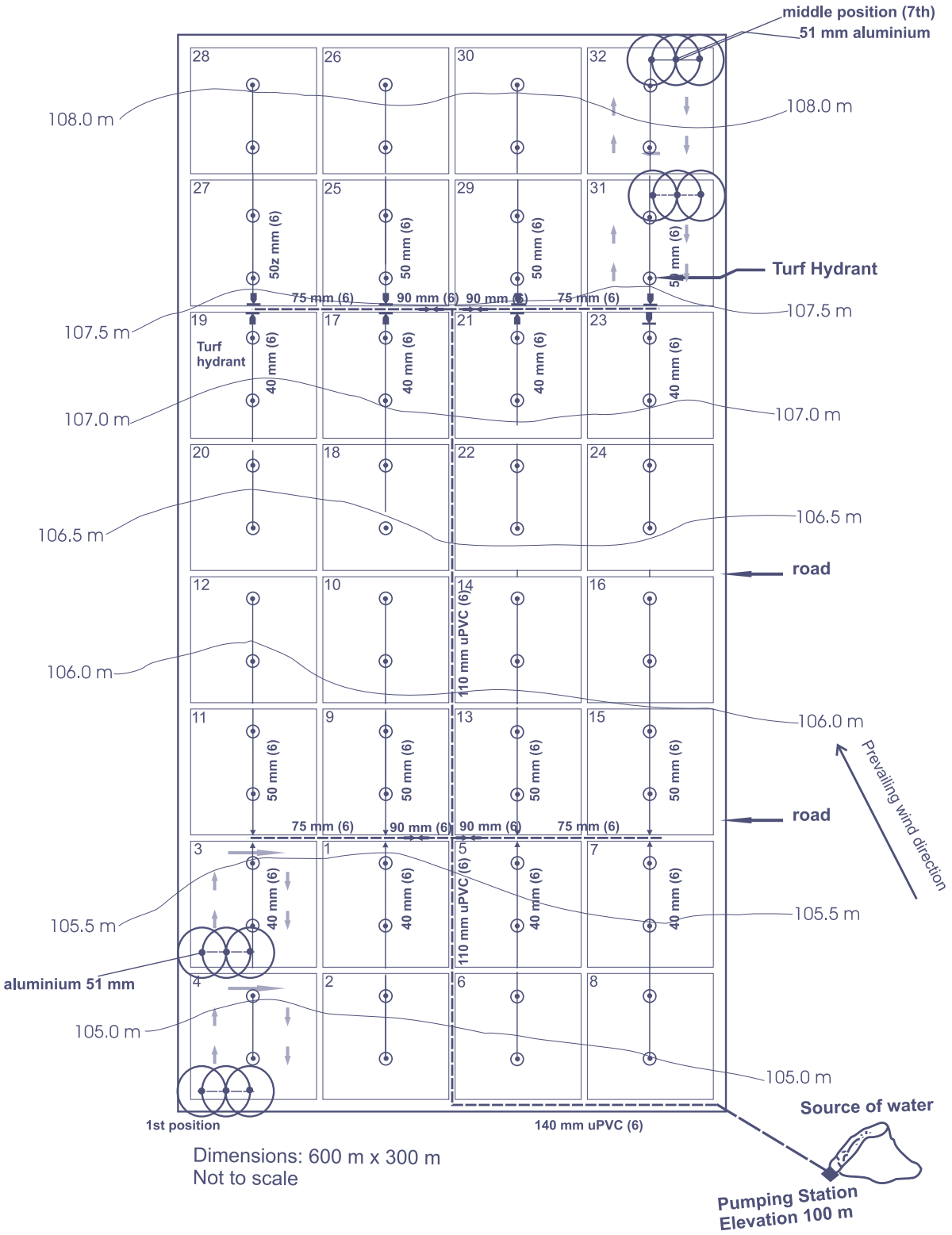

plots can be demarcated and the area is extended by a strip of 4 m x 300 m. Assuming that this is possible the second option is favoured (Figure 14). The best-fit sprinkler spacing for a plot size of 72 m x 72 m would be 12 m x 12 m. This plot size and sprinkler spacing results in 12 lateral positions, if the tertiary line dissects the plot.

Reference to Table 5 shows that various sprinkler options are available. The 3.0 mm nozzle at various pressures would more than satisfy the wind requirements criteria, the spacing being within 50% of the diameter of coverage (0.5 x 25m = 12.5 m). The same applies to the 3.5 mm nozzle sprinkler and the 4.0 mm nozzle sprinkler. However, the precipitation rate of the 4.0 mm nozzle exceeds the 5-6 mm/hr soil infiltration rate limit in our example. The same holds true for the 3.5 mm nozzle when it operates at more than 300 kPa.

Also, as a rule, the water distribution from a sprinkler is not as good when it operates at the extreme low end of its operating pressure range. Hence, both the 3.0 mm and 3.5 mm nozzles will not be considered at 250 kPa. Of the remaining combinations, the best fit from the operational point of view and capital cost as well as energy requirements will be considered.

Using the basic farm data given in Example 1 (on soil characteristics and crop water requirements) and the calculations done in Sections 2.1, 2.2 and 3.2 the following sprinkler options are considered:

1) 3 mm nozzle, 300 kPa, 4.38 mm/hr at 12 m x 12 m spacing
   8 day frequency, 7 day cycle,
   d_{gross} = 61.87 mm at 47% depletion.

$$\text{Hours of operation per shift} = \frac{61.87}{4.38} = 14.12$$

This option allows for only one shift per day of 24 hours. As there are 12 lateral positions per plot, the irrigation cycle cannot be completed in 7 days unless 2 laterals are provided per plot. This is a possibility, but would be a costly option.

2) 3 mm nozzle, 300 kPa, 4.38 mm/hr at 12 m x 12 m spacing
   7 day frequency, 6 day cycle,
   d_{gross} = 54.13 mm at 41% depletion.

$$\text{Hours of operation per shift} = \frac{54.13}{4.38} = 12.35$$

This option has the same drawback as the previous alternative.

3) 3 mm nozzle, 350 kPa, 4.72 mm/hr at 12 m x 12 m spacing
   8 day frequency, 7 day cycle,
   d_{gross} = 61.87 mm at 47% depletion.

$$\text{Hours of operation per shift} = \frac{61.87}{4.72} = 13.10$$

The same drawback also prevails here.

4) 3 mm nozzle, 350 kPa, 4.72 mm/hr at 12 m x 12 m spacing
   7 day frequency, 6 day cycle,
   d_{gross} = 54.13 mm at 41% depletion.

$$\text{Hours of operation per shift} = \frac{54.13}{4.72} = 11.46$$

This alternative appears to be promising. It allows for two shifts per day (24-hour period) with half an hour available between each shift to move the portable lateral to the next operating position. It also allows a high degree of equipment utilization, as the system will operate for about 23 hours per day during the peak demand period. While the other options would have necessitated providing two laterals per plot, this option will only require one lateral and therefore saves on costs. This option is therefore adopted.

System layout

When preparing the layout of the pipe network, a degree of flexibility in operation should be considered. At the same time, the designer has to adhere to the criteria for locating the portable lateral in relation to the wind direction and the land slope, wherever possible.

One option would be to provide for a main line in the middle of the land running against the main slope. The secondary pipelines would then run parallel to the contours and serve pairs of plots on each side. Tertiary pipelines would take off from the secondary line and supply the lateral of each plot as shown in Figure 15. A second option is to double the number of secondaries of the first option and have one tertiary line per plot serving its portable lateral as in Figure 16.

While the first option is more economical, the second option is more flexible since any breakages of any tertiary pipeline would affect the operation of only one plot compared to two plots in the first option.

Naturally it may be argued that more economical layouts can be derived by having more than two plots served by one tertiary line. In contrast to that, individual water control may be necessary for schemes with a big number of plot holders as it allows for better water management. These options need to be discussed with the farmers so that they can select which one they prefer.

It will be assumed that the farmers prefer option 1. Therefore, the following design will be based on the layout of Figure 15.

Figure 16
System layout based on a 12 m x 12 m spacing with each tertiary serving one plot (semi-portable)

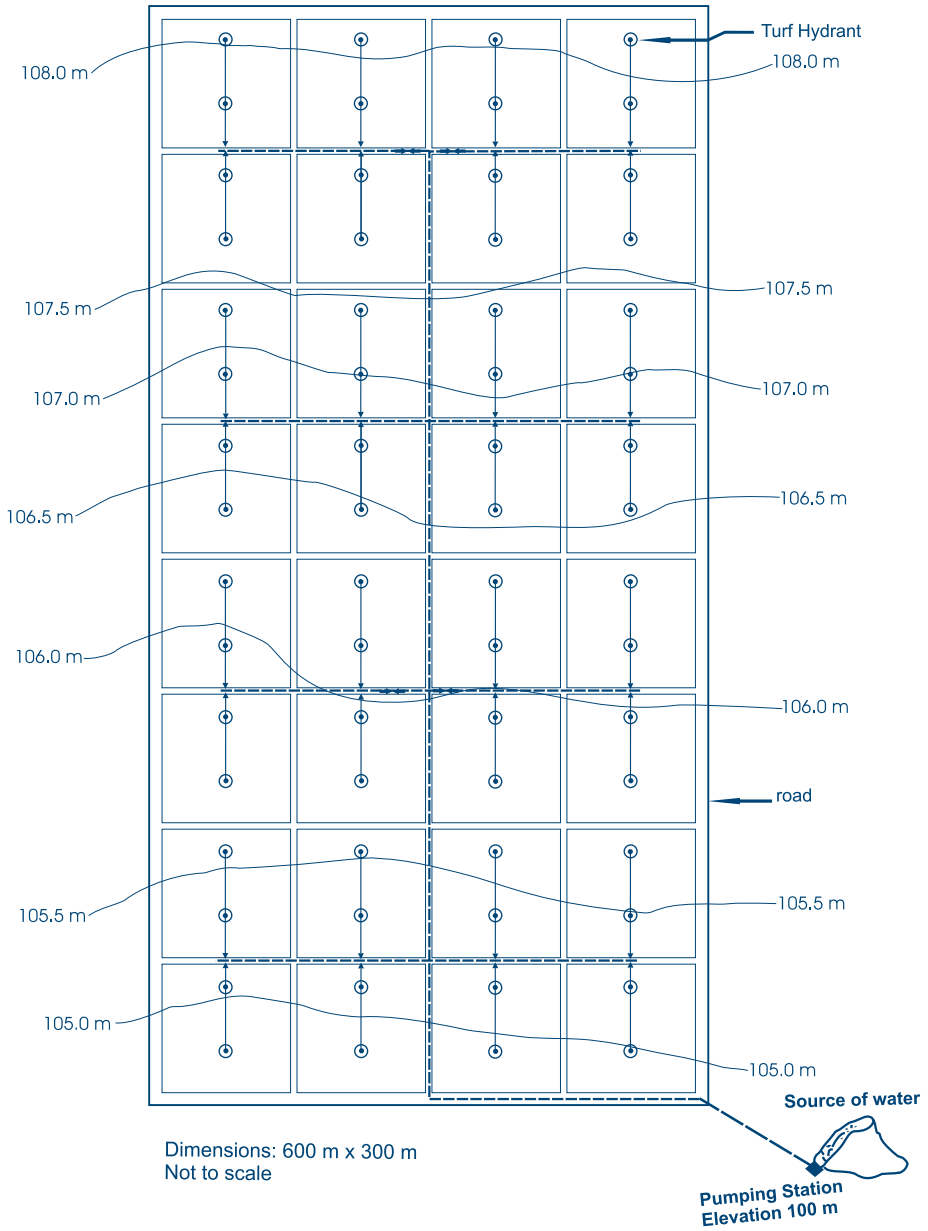

Pipe size determination

As mentioned earlier the pipes should be sized in such a way that the total pressure variation within the system (assuming this is the hydraulic units) does not exceed 20% of the sprinkler operating pressure.

For the case under consideration it should not exceed 70 kPa (350 x 0.2) or 7 metres. This means that the head losses due to friction and difference in elevation between the reference point (beginning of first secondary) and the sprinkler of the furthest plot with the highest elevation should not exceed 7 metres. The hydraulics of each plot must also be checked and conform to this principle.

A point of clarification may be required at this stage. The total allowable pressure variation is applied to a hydraulic unit. Such a unit may be the total area of the scheme or any part of that area. Hence, a reference point may be the first secondary offtake or every secondary or every tertiary offtake depending on how steep the land is. In our example, the first secondary offtake located at elevation 105.6 metres is considered as the reference point, with the whole scheme considered as one hydraulic unit.

Laterals

Using Table 5 and Figure 8 and applying the appropriate Chistiansen's "F" factor from Table 12, the following

friction losses are calculated for the 30 m long aluminium lateral:

Q = 3 sprinklers x 0.68 m^3/hr per sprinkler
= 2.04 m^3/hr
L = 30 m (12 m + 12 m + 6 m)
D = 51 mm

HL = 0.0023 x 30 x 0.518 = 0.036 m

Naturally, for such a small discharge a smaller diameter pipe could be used, say the 32 mm, if available. In this case the friction losses are:

HL = 0.018 x 30 x 0.518 = 0.28 m

Since in most countries of East and Southern Africa the 32 mm aluminium pipe is not available, we will maintain the 51 mm diameter lateral in our example. As each valve hydrant serves 3 lateral positions (one on each side of the hydrant plus one at the hydrant), the friction losses for a 12 m aluminium pipe (header) with a flow of 2.04 m^3/hr should be included:

HL = 0.0023 x 12 = 0.028 m

Therefore, the total friction loss of the lateral when the header is used is 0.064 m (0.036 + 0.028).

Tertiaries

The tertiary lines should be buried so that they do not interfere with cultural practices. As such, they should preferably be made of non-corrosive material. This limits the choice to either uPVC or AC. As both types have similar hydraulic characteristics, the criteria for choice would be availability, cost, health aspects and ease of installation. As a rule, uPVC is more compatible to the above criteria for small sizes and AC for large sizes. Again, it varies from country to country. In the case under consideration, uPVC has been adopted.

As the flow in some of the tertiaries of this example is directed uphill and in others downhill, friction losses for two cases will be calculated and later on checked against the total allowable pressure variation that the hydraulics of each plot should conform to. For each case the hydraulics of the tertiaries are calculated separately for lateral position 1 and lateral position 7 in order to establish the worst situation.

Case 1: Downhill flow

Q (m_3/hr)	L (m)	D (mm)	Pipe Class	uPVC Hf (m/100m)	HL (m)
Lateral position 1 (first position 1)					
4.08	58[1]	40	6	3.60	2.09
2.04	76[2]	40	6	1.20	0.91
				Total friction losses	**3.00**
Lateral position 7 (middle position)					
4.08	22[3]	40	6	3.60	0.79
2.04	76[4]	40	6	1.20	0.91
				Total friction losses	**1.70**

1 *distance between H3 and secondary intake = 12+12+12+12+6+4 = 58 m*
2 *distance between H1 and H3 = 12+12+12+12+6+4+6+12 = 76 m*
3 *distance between H4 and secondary intake = 12+6+4 = 22 m*
4 *distance between H2 and H4 = 12+6+4+6+12+12+12+12 = 76 m*

Figures 17a
Downhill flow laterals at lower part of plot

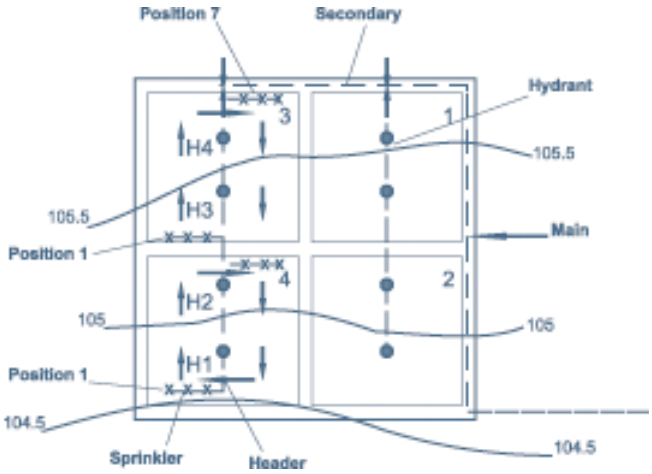

Case 2: Uphill flow

Q (m_3/hr)	L (m)	D (mm)	Pipe Class	uPVC Hf (m/100m)	HL (m)
Lateral position 1 (first position 1)					
4.08	18[1]	50	6	1.30	0.23
2.04	76[2]	50	6	0.37	0.28
				Total friction losses	**0.51**
Lateral position 7 (middle position)					
4.08	54[3]	50	6	1.30	0.70
2.04	76[4]	50	6	1.37	0.28
				Total friction losses	**0.98**

1 *distance between secondary intake and H1 = 6+12 = 18 m*
2 *distance between H1 and H3 = 12+12+12+12+6+4+6+12 = 76 m*
3 *distance between secondary intake and H2 = 6+12+12+12+12 = 54 m*
4 *distance between H2 and H4 = 12+6+4+6+12+12+12+12 = 76 m*

Figures 17b
Uphill flow laterals at upper part of plot

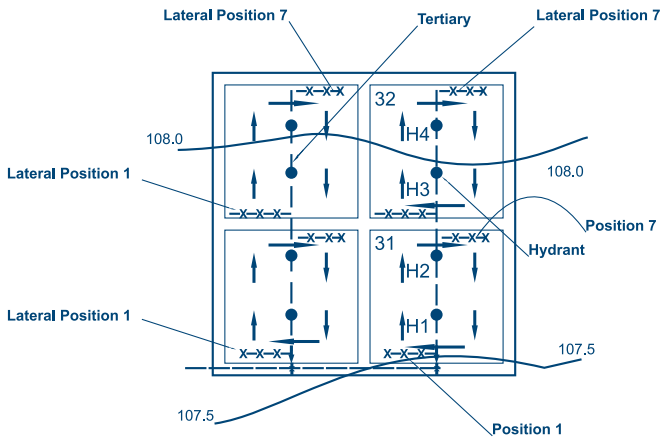

Figures 17a and 17b illustrate the positions of the laterals that are discussed in cases 1 and 2 respectively.

Referring to the allowable pressure variation of 7 m and taking into consideration the head losses in the tertiaries and laterals of 3.06 m (0.064 + 3.00) at position 1, a balance of 3.94 m (7 - 3.06) is left for the secondary, mainline and the difference in elevation. However, since there is a negative difference in elevation of 1.1 m (104.5 - 105.6), the total available head for the secondary is 5.04 m (3.94 + 1.1). In position 7, the negative difference of elevation is 0.4 m (105.2 - 105.6). Following the same logic, the total head available for the secondary will be 5.64 m {7 - (0.064 + 1.70) + 0.4}. Since the secondary must satisfy the needs of both position 1 and position 7 and the head losses plus the difference in elevation do not exceed the allowable pressure variation, the lowest available head (5.04 m) is the one selected. The secondaries would thus be sized so that the head losses do not exceed **5.04** metres.

Since the total allowable pressure variation is 7 metres and about 1.04 m (0.064 + 0.98) is lost to friction in the laterals and uphill flow tertiaries, **5.96 m** (7 - 1.04), is available to cover the 2.65 m (108.25 - 105.6) dif-ference in elevation between the first set of secondary take-offs from the main and the highest plot as well as the friction losses in the secondaries and the main line.

Secondaries

All secondary lines can be of the same size, since they carry the same flow, and they run parallel to the contours (Figure 15). However, because of the 4 metres wide road and the position of the mainline at the east side of the road, the eastern secondaries are 36 metres long each and the western secondaries are 40 metres (36 + 4).

The head losses in the first part of the eastern secondaries are given by:

Q	=	16.32 m^3/hr (8x2.04) (plots 5,6,13,14,21,22,29,30)
L (eastern side)	=	36 m
D	=	90 mm uPVC (6)
HL (eastern side)	=	0.008 x 36 = 0.29 m

The head losses in the first part of the western secondaries are given by:

Q	=	16.32 m^3/hr (8 x 2.04) (plots 1,2,9,10,17,18,25,26)
L (western side)	=	40 m
D	=	90 mm uPVC (6)
HL (western side)	=	0.008 x 40 = 0.32 m

The second sections of the secondaries are all the same length at 76 m (36 + 4 + 36) and their head losses are calculated as follows:

Q	=	8.16 m^3/hr (plots 3,4,7,8,11,12,15, 16,19,20,23,24,27,28,31,32)
L	=	76 m (36 + 4 + 36)
D	=	75 mm uPVC (6)
HL	=	0.0054 x 76 = 0.41 m

Thus, HL (total) for the secondary line is 0.70 m (eastern side) or 0.73 m (western side)

Mainline

For purposes of allowable pressure variation computations, the main is considered to start at the take-off point of the first two secondary lines. Therefore, the friction losses are obtained as follows:

Q	=	32.64 m^3/hr (16 x 2.04) (plots 17-32)
L	=	304 m (4 x 72 + 4 x 4)
D	=	110 mm (6)
HL	=	0.0098 x 304 = 2.98 m

Thus HL for the mainline is 2.98 m

While it appears that the total available head of 5.96 m for the difference in elevation and the head losses in the main and secondary lines is not exceeded, it is necessary to carry out verification on a plot by plot basis.

Hydraulics of individual plots in relation to the total allowable pressure variation

As pointed out earlier, the total head required by each plot in terms of friction losses and elevation differ-ences from the reference point should not exceed 7 m. Hence, if for example the plot with the lowest friction losses and elevation difference from the reference point is -1 (minus 1) m then the plot with the highest should not exceed 6 m.

Table 16 summarizes the conformity of each plot to the total allowable pressure variation.

The data of Table 16 show that while plots 18-20 and 22-24 at position 1 and plots 28 and 32 at position 7 are exceeding the 7 m limit, plots 1-16 can allow a certain increase in friction losses and therefore the use of smaller pipe sizes for either secondaries or the tertiaries or both. Also, a change in the diameter of the main from 110 mm to 140 mm will reduce the friction losses by 2.01 m (2.98 - 0.97) for the plots where the allowable pressure variation exceeds the 7 m limit, hence:

Q	=	32.64 m^3/hr
L	=	304 m
D	=	140 mm PVC (6)

Table 16

Pressure variation on a plot by plot basis (semi-portable sprinkler system for smallholders)

Plot No	HL Main (m)	HL Secondary (m)	HL Tertiary (lateral pos. 1) (m)	HL Tertiary (lateral pos. 7) (m)	HL Lateral and Header (m)	Difference in Elevation *		Total Pressure Variation	
						pos. 1 (m)	pos. 7 (m)	pos. 1 (m)	pos. 7 (m)
1	-	0.32	2.09	0.79	0.06	-0.35	-0.05	2.12	1.12
2	-	0.32	3.00	1.70	0.06	-0.80	-0.35	2.58	1.73
3	-	0.73	2.09	0.79	0.06	-0.35	-0.05	2.53	1.53
4	-	0.73	3.00	1.70	0.06	-1.00	-0.40	2.79	2.09
5	-	0.29	2.09	0.79	0.06	-0.30	0.10	2.14	1.24
6	-	0.29	3.00	1.70	0.06	-0.70	-0.30	2.65	1.75
7	-	0.70	2.09	0.79	0.06	-0.35	0.10	2.50	1.65
8	-	0.70	3.00	1.70	0.06	-0.60	-0.25	3.16	2.21
9	-	0.32	0.23	0.70	0.06	0.00	0.40	0.61	1.48
10	-	0.32	0.51	0.98	0.06	0.40	0.80	1.29	2.16
11	-	0.73	0.23	0.70	0.06	0.00	0.20	1.02	1.69
12	-	0.73	0.51	0.98	0.06	0.30	0.70	1.60	2.47
13	-	0.29	0.23	0.70	0.06	0.00	0.40	0.58	1.45
14	-	0.29	0.51	0.98	0.06	0.40	0.80	1.26	2.13
15	-	0.70	0.23	0.70	0.06	0.15	0.50	1.14	1.96
16	-	0.70	0.51	0.98	0.06	0.50	0.80	1.77	2.54
17	2.98	0.32	2.09	0.79	0.06	1.30	1.90	6.75	6.05
18	2.98	0.32	3.00	1.70	0.06	0.80	1.20	7.16	6.26
19	2.98	0.73	2.09	0.79	0.06	1.40	1.90	7.26	6.46
20	2.98	0.73	3.00	1.70	0.06	0.75	1.00	7.52	6.47
21	2.98	0.29	2.09	0.79	0.06	1.40	1.90	6.82	6.02
22	2.98	0.29	3.00	1.70	0.06	0.90	1.30	7.23	6.33
23	2.98	0.70	2.09	0.79	0.06	1.40	1.90	7.23	6.43
24	2.98	0.70	3.00	1.70	0.06	0.90	1.30	7.64	6.74
25	2.98	0.32	0.23	0.70	0.06	1.90	2.20	5.49	6.26
26	2.98	0.32	0.51	0.98	0.06	2.20	2.60	6.07	6.94
27	2.98	0.73	0.23	0.70	0.06	1.90	2.20	5.90	6.67
28	2.98	0.73	0.51	0.98	0.06	2.20	2.60	6.48	7.35
29	2.98	0.29	0.23	0.70	0.06	1.90	2.20	5.46	6.23
30	2.98	0.29	0.51	0.98	0.06	2.20	2.60	6.04	6.91
31	2.98	0.70	0.23	0.70	0.06	1.90	2.20	5.87	6.64
32	2.98	0.70	0.51	0.98	0.06	2.30	2.70	6.55	7.42

* *The difference in elevation is the height difference between the first junction along the mainline and the ground level of sprinkler positions 1 and 7*

HL = 0.0032 x 304 = 0.97 m

By changing the size of the secondaries serving plots 1-16 from 90 mm and 75 mm to 63 mm, a saving in the cost can be made while the frictional losses are brought closer to those of plots 17-32, bearing in mind that the pump will have to satisfy the worst case anywhere. The friction losses for plots 1-16 are re-calculated as follows:

Q = 16.32 m^3/hr (8 x 2.04) (plots 5,6,13,14)
L (eastern side) = 36 m
D = 63 mm uPVC (6)

HL (eastern side) = 0.04 x 36 = 1.44 m

The head losses in the first part of the western secondaries are given by

Q = 16.32 m^3/hr (8 x 2.04) (plots 1,2,9,10)
L (western side) = 40 m
D = 63 mm uPVC (6)

HL (western side) = 0.04 x 40 = 1.60 m

The second sections of the secondaries are all the same length at 76 (36 + 4 + 36) m and their head losses are calculated as follows:

Q = 8.16 m^3/hr (plots 3,4,7,8,11,12,15,16)
L = 76 m
D = 63 mm uPVC (6)

HL = 0.0124 x 76 = 0.94 m

Thus, HL (total) for the secondary line is 2.38 m (eastern side) or 2.54 m (western side)

Table 17

Pressure variation on a plot by plot basis after changes in size of two secondaries and some tertiaries were introduced (semi-portable sprinkler system for smallholders)

Plot No.	HL Main (m)	HL Secondary (m)	HL Tertiary (lateral pos. 1) (m)	HL Tertiary (lateral pos. 7) (m)	HL Lateral and Header (m)	Difference in Elevation *		Total Pressure Variation	
						pos. 1 (m)	pos. 7 (m)	pos. 1 (m)	pos. 7 (m)
1	-	1.60	2.09	0.79	0.06	-0.35	-0.05	3.40	2.40
2	-	1.60	3.00	1.70	0.06	-0.80	-0.35	3.86	3.01
3	-	2.54	2.09	0.79	0.06	-0.35	-0.05	4.34	3.34
4	-	2.54	3.00	1.70	0.06	-1.00	-0.40	4.60	3.90
5	-	1.44	2.09	0.79	0.06	-0.30	0.10	3.29	2.39
6	-	1.44	3.00	1.70	0.06	-0.70	-0.30	3.80	2.90
7	-	2.38	2.09	0.79	0.06	-0.35	0.10	4.18	3.33
8	-	2.38	3.00	1.70	0.06	-0.60	-0.25	4.84	3.89
9	-	1.60	0.65	1.94	0.06	0.00	0.40	2.31	4.00
10	-	1.60	1.56	2.85	0.06	0.40	0.80	3.62	5.31
11	-	2.54	0.65	1.94	0.06	0.00	0.20	3.25	4.74
12	-	2.54	1.56	2.85	0.06	0.30	0.70	4.46	6.15
13	-	1.44	0.65	1.94	0.06	0.00	0.40	2.15	3.84
14	-	1.44	1.56	2.85	0.06	0.40	0.80	3.46	5.15
15	-	2.38	0.65	1.94	0.06	0.15	0.50	3.24	4.88
16	-	2.38	1.56	2.85	0.06	0.50	0.80	4.50	6.09
17	0.97	0.32	2.09	0.79	0.06	1.30	1.90	4.74	4.04
18	0.97	0.32	3.00	1.70	0.06	0.80	1.20	5.15	4.25
19	0.97	0.73	2.09	0.79	0.06	1.40	1.90	5.25	4.45
20	0.97	0.73	3.00	1.70	0.06	0.75	1.00	5.51	4.46
21	0.97	0.29	2.09	0.79	0.06	1.40	1.90	4.81	4.01
22	0.97	0.29	3.00	1.70	0.06	0.90	1.30	5.22	4.32
23	0.97	0.70	2.09	0.79	0.06	1.40	1.90	5.22	4.42
24	0.97	0.70	3.00	1.70	0.06	0.90	1.30	5.63	4.73
25	0.97	0.32	0.23	0.70	0.06	1.90	2.20	3.48	4.25
26	0.97	0.32	0.51	0.98	0.06	2.20	2.60	4.06	4.93
27	0.97	0.73	0.23	0.70	0.06	1.90	2.20	3.89	4.66
28	0.97	0.73	0.51	0.98	0.06	2.20	2.60	4.47	5.34
29	0.97	0.29	0.23	0.70	0.06	1.90	2.20	3.45	4.22
30	0.97	0.29	0.51	0.98	0.06	2.20	2.60	4.05	4.90
31	0.97	0.70	0.23	0.70	0.06	1.90	2.20	3.86	4.63
32	0.97	0.70	0.51	0.98	0.06	2.30	2.70	4.54	5.41

* *The elevation difference is the height difference between the first junction along the mainline and the ground level of sprinkler positions 1 and 7*

Changing the size of the uphill tertiaries of plots 9-16 to 40 mm results in cost savings while the losses are maintained within the allowable pressure variation. The head losses will be as follows:

Q (m_3/hr)	L (m)	D (mm)	Pipe Class	uPVC Hf (m/100m)	HL (m)
Lateral position 1 (first position 1)					
4.08	18	40	6	3.60	0.65
2.04	76	40	6	1.20	0.91
				Total friction losses	**1.56**
Lateral position 7 (middle position)					
4.08	54	40	6	3.60	1.94
2.04	76	40	6	1.20	0.91
				Total friction losses	**2.85**

Table 17 summarizes the pressure variation on a plot by plot basis after the above changes were introduced. Figure 18 shows the final pipe sizes after modifications to allow for pressure variation requirements.

Total head requirements

Following the approach discussed earlier, the total head requirements are summarized in Tables 18 and 19 respectively for lateral positions 1 and 7, after the head losses of the supply line are incorporated from the following calculations.

Q = 65.28 m^3/hr (32x2.04)

Figure 18

Semi-portable system layout based on a 12 m x 12 m spacing with tertiaries serving two plots (final, after modifications to provide for allowable pressure variation)

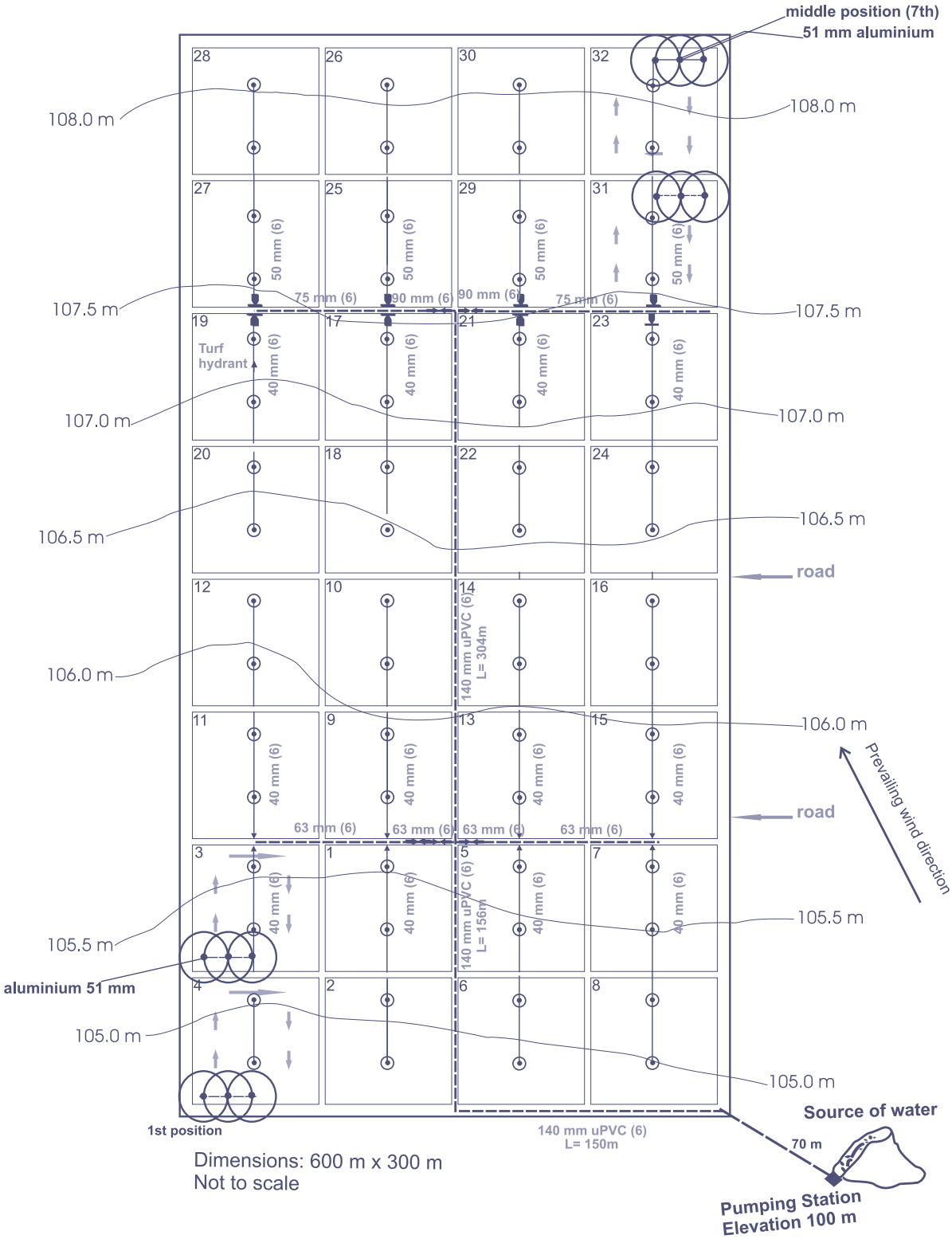

Table 18

Total head requirements of a semi-portable sprinkler on a plot by plot basis (1st lateral position)

Plot No.	Suction Lift (m)	HL Supply Line (m)	HL Main (m)	HL Secondary (m)	HL Tertiary Line (m)	HL Lateral & Header (m)	Riser (m)	Sprinkler Operating Pressure (m)	HL Fittings 10% (m)	Difference in Elevation * (m)	HL Total (m)
1	2.0	4.14	-	1.60	2.09	0.06	2.50	35	4.74	5.25	57.4
2	2.0	4.14	-	1.60	3.00	0.06	2.50	35	4.83	4.80	57.9
3	2.0	4.14	-	2.54	2.09	0.06	2.50	35	4.83	5.25	58.4
4	2.0	4.14	-	2.54	3.00	0.06	2.50	35	4.92	4.60	58.8
5	2.0	4.14	-	1.44	2.09	0.06	2.50	35	4.72	5.30	57.3
6	2.0	4.14	-	1.44	3.00	0.06	2.50	35	4.81	4.90	57.8
7	2.0	4.14	-	2.38	2.09	0.06	2.50	35	4.82	5.25	58.2
8	2.0	4.14	-	2.38	3.00	0.06	2.50	35	4.91	4.75	58.7
9	2.0	4.14	-	1.60	0.65	0.06	2.50	35	4.60	5.60	56.2
10	2.0	4.14	-	1.60	1.56	0.06	2.50	35	4.69	6.00	57.6
11	2.0	4.14	-	2.54	0.65	0.06	2.50	35	4.69	5.60	57.2
12	2.0	4.14	-	2.54	1.56	0.06	2.50	35	4.78	5.90	58.5
13	2.0	4.14	-	1.44	0.65	0.06	2.50	35	4.58	5.60	56.0
14	2.0	4.14	-	1.44	1.56	0.06	2.50	35	4.67	6.00	57.4
15	2.0	4.14	-	2.38	0.65	0.06	2.50	35	4.67	5.75	57.2
16	2.0	4.14	-	2.38	1.56	0.06	2.50	35	4.76	6.10	58.5
17	2.0	4.14	0.97	0.32	2.09	0.06	2.50	35	4.71	6.90	58.7
18	2.0	4.14	0.97	0.32	3.00	0.06	2.50	35	4.80	6.45	59.7
19	2.0	4.14	0.97	0.73	2.09	0.06	2.50	35	4.75	6.90	59.1
20	2.0	4.14	0.97	0.73	3.00	0.06	2.50	35	4.84	6.35	59.6
21	2.0	4.14	0.97	0.29	2.09	0.06	2.50	35	4.71	7.00	58.8
22	2.0	4.14	0.97	0.29	3.00	0.06	2.50	35	4.80	6.50	59.3
23	2.0	4.14	0.97	0.70	2.09	0.06	2.50	35	4.75	7.00	59.2
24	2.0	4.14	0.97	0.70	3.00	0.06	2.50	35	4.84	6.48	59.7
25	2.0	4.14	0.97	0.32	0.23	0.06	2.50	35	4.52	7.50	57.2
26	2.0	414	0.97	0.32	0.51	0.06	2.50	35	4.55	7.80	59.9
27	2.0	4.14	0.97	0.73	0.23	0.06	2.50	35	4.56	7.40	57.6
28	2.0	4.14	0.97	0.73	0.51	0.06	2.50	35	4.59	7.80	58.3
29	2.0	4.14	0.97	0.29	0.23	0.06	2.50	35	4.52	7.50	57.2
30	2.0	4.14	0.97	0.29	0.51	0.06	2.50	35	4.55	7.80	57.8
31	2.0	4.14	0.97	0.70	0.23	0.06	2.50	35	4.56	7.45	57.6
32	2.0	4.14	0.97	0.70	0.51	0.06	2.50	35	4.59	7.85	58.3

* *The difference in elevation is the height difference between the eye of the impeller and the ground level of the sprinkler*

L = 376 m (70 m from the pump to the field edge + 150 m from the field edge to the middle of the field + 12 m for crossing 3 roads + 144 m, being the length of two plots)

D = 140 mm uPVC (6)

HL = 0.011 x 376 = 4.14 m

Thus HL for the supply line is 4.14 m

It appears that while for some plots the worst hydraulic case coincides with lateral position 1 (plots 1 - 8 and 17-26), for others it occurs with the lateral operating at position 7. The data of Tables 18 and 19 also show that plots 12 and 16 (Table 19) demand the highest head of 60.3 m and 60.2 m respectively when the lateral is operating at the 7th position. The pumping plant should therefore be sized for the maximum head. Also, since the maximum head requirement of 60.3 m includes the 2 m suction lift, the pressure at the pump outlet will be 58.3 m (60.3 - 2.0), which is within the pressure rating of class 6, uPVC pipe used as the supply line (Table 14).

Table 19

Total head requirements of a semi-portable sprinkler system for smallholders on a plot by plot basis (7th lateral position)

Plot No.	Suction Lift (m)	HL Supply Line (m)	HL Main (m)	HL Secondary (m)	HL Tertiary Line (m)	HL Lateral & Header (m)	Riser (m)	Sprinkler Operating Pressure (m)	HL Fittings 10% (m)	Difference in Elevation * (m)	HL Total (m)
1	2.0	4.14	-	1.60	0.79	0.06	2.50	35	4.61	5.55	56.3
2	2.0	4.14	-	1.60	1.70	0.06	2.50	35	4.70	5.25	57.0
3	2.0	4.14	-	2.54	0.79	0.06	2.50	35	4.70	5.55	57.3
4	2.0	4.14	-	2.54	1.70	0.06	2.50	35	4.79	5.20	57.9
5	2.0	4.14	-	1.44	0.79	0.06	2.50	35	4.59	5.70	56.2
6	2.0	4.14	-	1.44	1.70	0.06	2.50	35	4.68	5.30	56.8
7	2.0	4.14	-	2.38	0.79	0.06	2.50	35	4.69	5.57	57.1
8	2.0	4.14	-	2.38	1.70	0.06	2.50	35	4.78	5.35	57.9
9	2.0	4.14	-	1.60	1.94	0.06	2.50	35	4.72	6.00	58.0
10	2.0	4.14	-	1.60	2.85	0.06	2.50	35	4.82	6.40	59.4
11	2.0	4.14	-	2.54	1.94	0.06	2.50	35	4.82	5.80	58.8
12	2.0	4.14	-	2.54	2.85	0.06	2.50	35	4.91	6.30	60.3
13	2.0	4.14	-	1.44	1.94	0.06	2.50	35	4.71	5.90	57.7
14	2.0	4.14	-	1.44	2.85	0.06	2.50	35	4.80	6.40	59.2
15	2.0	4.14	-	2.38	1.94	0.06	2.50	35	4.80	6.10	58.9
16	2.0	4.14	-	2.38	2.85	0.06	2.50	35	4.89	6.40	60.2
17	2.0	4.14	0.97	0.32	0.79	0.06	2.50	35	4.56	7.50	57.8
18	2.0	4.14	0.97	0.32	1.70	0.06	2.50	35	4.67	6.80	58.2
19	2.0	4.14	0.97	0.73	0.79	0.06	2.50	35	4.62	7.40	58.2
20	2.0	4.14	0.97	0.73	1.70	0.06	2.50	35	4.71	6.80	58.6
21	2.0	4.14	0.97	0.32	0.79	0.06	2.50	35	4.58	7.50	57.8
22	2.0	4.14	0.97	0.32	1.70	0.06	2.50	35	4.67	6.80	58.1
23	2.0	4.14	0.97	0.73	0.79	0.06	2.50	35	4.63	7.40	58.4
24	2.0	4.14	0.97	0.73	1.70	0.06	2.50	35	4.63	6.80	57.8
25	2.0	4.14	0.97	0.32	0.70	0.06	2.50	35	4.57	7.70	58.0
26	2.0	414	0.97	0.32	0.98	0.06	2.50	35	4.60	8.20	58.9
27	2.0	4.14	0.97	0.73	0.70	0.06	2.50	35	4.61	7.70	58.2
28	2.0	4.14	0.97	0.73	0.98	0.06	2.50	35	4.64	8.20	59.2
29	2.0	4.14	0.97	0.32	0.70	0.06	2.50	35	4.59	7.75	58.3
30	2.0	4.14	0.97	0.32	0.98	0.06	2.50	35	4.59	8.20	58.7
31	2.0	4.14	0.97	0.73	0.70	0.06	2.50	35	4.61	7.80	58.5
32	2.0	4.14	0.97	0.73	0.98	0.06	2.50	35	4.64	8.30	59.3

* *The difference in elevation is the height difference between the eye of the impeller and the ground level of the sprinkler*

Power requirements

Using Equations 8 and 9, the power requirements of the pump are calculated as follows

$$\text{Power requirements in BHP} = \frac{65.28 \times 60.3}{273 \times 0.6} = 24.03$$

or

$$\text{Power requirements in kW} = \frac{65.28 \times 60.3}{360 \times 0.6} = 18.22$$

If 20% losses are assumed between prime mover and pump, then a prime mover of 28.51 HP (1.75 HP/ha) or 21.89 kW (1.33 kW/ha) would be required. A comparison of the power requirements for this type of system and the commercial semi-portable calculated to be 2.01 HP/ha or 1.52 kW/ha (section 3.2.1) shows that smallholders semi-portable schemes can have similar power requirements to commercial schemes, when the former is designed to fit the requirements of smallholders.

Figure 19

Layout of a drag-hose sprinkler system based on a 12 m x 12 m spacing (first attempt for pipe sizing)

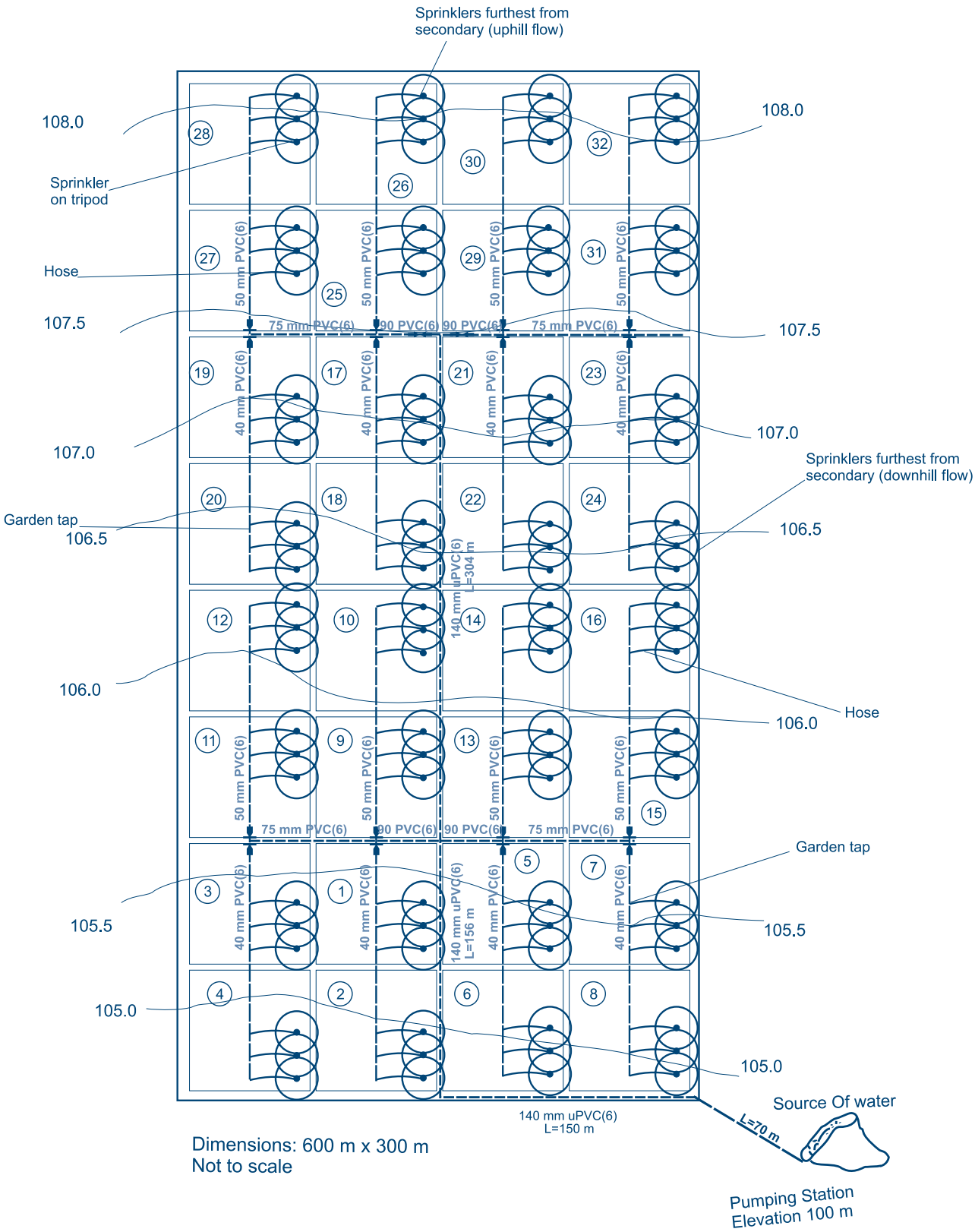

3.2.3. Design of a drag-hose sprinkler system for a smallholder scheme

Another alternative to the semi-portable sprinkler system described earlier is the drag-hose sprinkler system whereby sprinklers on tripods are connected to the tertiary buried pipe through pressure hoses. The hoses are connected to garden taps or turf hydrants, installed on the buried tertiary line.

The drag-hose system is very similar to the semi-portable system but instead of farmers moving the aluminium lateral from one position to the next, they move the sprinkler and tripod along the hose length at the required sprinkler spacing. The hoses and the sprinklers can then be moved to the next set of garden taps. The system lends itself to smallholder irrigation schemes, because it allows the same independence enjoyed by farmers when using a semi-portable system at lower cost, easy maintenance and flexibility of positioning the sprinkler to better suit windy conditions. Each plot holder with 0.5 ha is allocated three sprinklers for the operation of two shifts per day during the peak water demand period. The basic design principles discussed earlier are applicable here also.

Using the same example and the same sprinkler and general layout used for the semi-portable option for smallholders, a drag-hose system layout is presented in Figure 19.

Pipe size determination

The same principle of total allowable pressure variation is applicable here also. Based on the sprinkler operating pressure (350 kPa) the allowable pressure variation was calculated to be 70 kPa (7 m). This implies that the head losses due to friction and the difference in elevation between the reference point (first take-off from main line) and the furthest plot with the highest elevation should not exceed 7 m. While this is possible for the case under consideration, because of the fairly uniform and gentle slope (about 0.55%), it may not be possible for large areas and steeper slopes. In such cases, the total area is divided into a number of hydraulic units and the criterion of allowable pressure variation is applied to each unit separately.

If all hydraulic units are supplied by the same supply line, pres-sure control or regulation will be required at the take-off point of every unit. Pressure regulating valves or twin valves can be used for this. Alternatively, special pressure controls can be provided at the inlet of each sprinkler.

The layout in Figure 19 requires that each tertiary should serve two plots. It is possible to design a layout in which each tertiary serves one plot or more than two plots. For the layout adopted, the hydraulics of each plot will be checked against the 7 m allowable pressure variation and the total head requirements of each plot calculated. The reference point for the hydraulic unit will be the first off-take at elevation 105.6 m.

Hoses

The sum of the friction losses in the 12½ mm inside diameter riser and the height of the riser is 2.5 m. Using the Hazen Williams formula presented in Equation 10, the frictional losses in the 32 m long hose can be determined as follows:

Equation 10

$$Hf_{100} = \frac{K \times \left\langle \frac{Q}{C} \right\rangle^{1.832}}{D^{4.87}}$$

Where:

Hf_{100}	=	friction losses over a 100 m distance (m/100 m)
K	=	constant 1.22×10^{12}, for metric units
Q	=	flow (l/s)
D	=	inside diameter (mm)
C	=	coefficient of retardation based on type of pipe materials (C = 140 for plastic)

By applying this formula to the 15 mm outside (12½ mm inside) diameter hose at 0.68 m^3/hr (0.19 l/s) flow and C = 140, Hf is 29.6 m per 100 m. Therefore, the 32 m long hose has a friction loss of 9.47 m (0.296 x 32). Alternatively, a 20 mm hose can be used reducing the friction losses to 0.98 m. In view of the large difference in friction losses between the two sizes and the anticipated operating cost with the 15 mm hose, the use of the 20 mm hoses is recommended for these systems.

Tertiaries

Two options of tertiaries will be required. One will refer to tertiaries going downhill (Figures 20a and 20b) and the other to the tertiaries going uphill (Figures 20c and 20d). Within each option, two distinct operating positions for the hoses will require separate treatment. The first would be when all three hoses operate at the furthest half of each plot and the second when the hoses operate at the nearest to the secondary part of each plot.

When sizing the pipes, one should keep in mind the fact that pressure is gained when going downslope. Therefore,

Downhill flow: hoses at upper part of plot or nearest to secondary (Figure 20a, Position 1)

Q (m^3/hr)	L (m)	D (mm)	Pipe Class	uPVC Hf (m/100m)	HL (m)
4.08	10(6+4)	40	6	3.60	0.36
3.40	12	40	6	2.50	0.30
2.72	12	40	6	1.75	0.21
				Sub-total	**0.87**
2.04	52(3x12+6+4+6)	40	6	1.20	0.62
1.36	12	40	6	0.50	0.06
0.68	12	40	6	0.17	0.02
				Total friction losses	**1.57**

Figure 20a

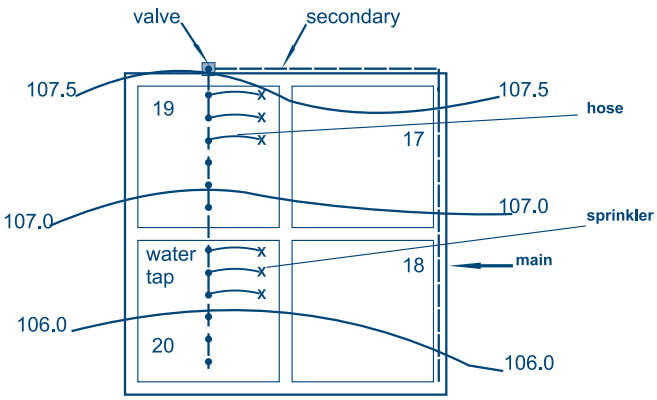

Downhill flow: hoses at lower part of plot or furthest from secondary (Figure 20b, Position 2)

Q (m^3/hr)	L (m)	D (mm)	Pipe Class	uPVC Hf (m/100m)	HL (m)
4.08	46(3x12+6+4)	40	6	3.60	1.66
3.40	12	40	6	2.50	0.30
2.72	12	40	6	1.75	0.21
				Sub-total	**2.17**
2.04	52(3x12+6+4+6)	40	6	1.20	0.62
1.36	12	40	6	0.50	0.06
0.68	12	40	6	0.17	0.02
				Total friction losses	**2.87**

Figure 20b

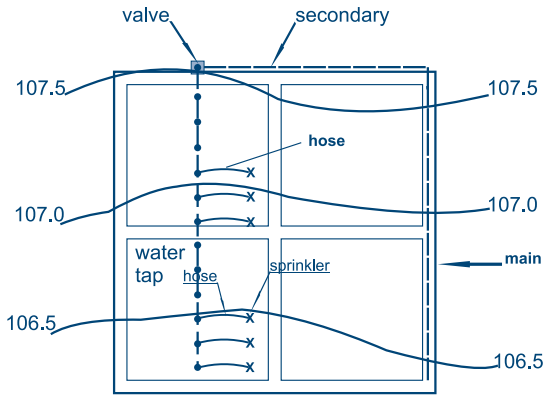

Uphill flow: hoses at lower part of plot or nearest to secondary (Figure 20c, Position 1)

Q (m^3/hr)	L (m)	D (mm)	Pipe Class	uPVC Hf (m/100m)	HL (m)
4.08	6	50	6	1.30	0.08
3.40	12	50	6	0.85	0.10
2.72	12	50	6	0.60	0.07
				Sub-total	**0.25**
2.04	36(3 x 12)	50	6	0.37	0.13
2.04•	16(6 + 4 +6)	40	6	1.20	0.19
1.36	12	40	6	0.50	0.06
0.68	12	40	6	0.17	0.02
				Total friction losses	**0.65**

Figure 20c

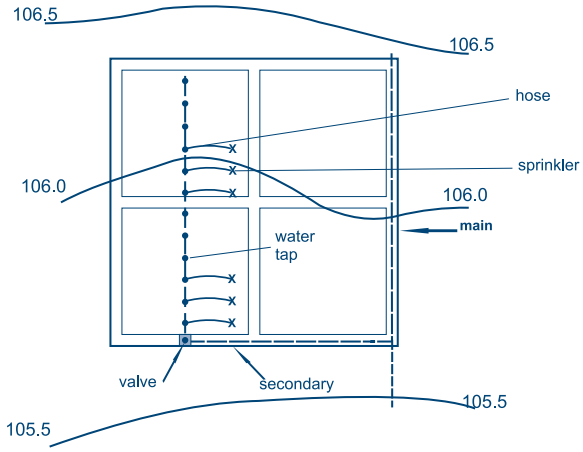

Uphill flow: hoses at upper part of plot or furthest from secondary (Figure 20d, Position 2)

Q (m^3/hr)	L (m)	D (mm)	Pipe Class	uPVC Hf (m/100m)	HL (m)
4.08	42(3x12+6)	50	6	1.30	0.55
3.40	12	50	6	0.85	0.10
2.72	12	50	6	0.60	0.07
				Sub-total	**0.72**
2.04•	52(6+4+6+3x12)	40	6	1.20	0.62
1.36	12	40	6	0.50	0.06
0.68	12	40	6	0.17	0.02
				Total friction losses	**1.42**

Figure 20d

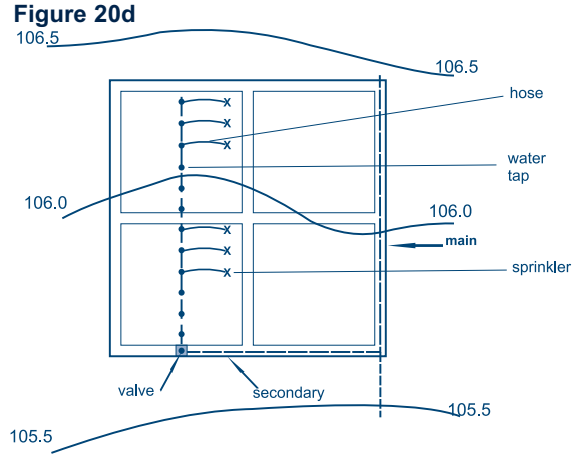

there is room to use smaller pipes, which result in more friction. That friction will be accounted for by the gravitational head (that is elevation difference). The reverse is also true; therefore, larger pipes should be used when going up-slope.

With this in mind, the head losses related to each of these positions are computed for the selected pipes as follows. Figure 9 should be referred to for friction losses gradients of uPVC pipes.

For each case, the frictional losses are calculated for each length of tertiary pipe between sprinklers.

Assuming that we use the same sprinkler used for the semi-portable smallholder option, the operating pressure is 35 m. The allowable pressure variation would then be 7 metres (35 x 0.2). As the total allowable pressure variation is 7 metres and since no lateral is used with this system, the 7 metres can be used for the friction losses in the tertiaries, secondaries, mainline and the difference in elevation. The frictions losses in the hoses and the risers are not included in the pressure variation because they are the same for each and all sprinklers.

As the first secondaries take off from the mainline and the highest plots (28-32) have a difference in elevation of 2.65 m (108.25 - 105.6) and the friction loses in the uphill flow tertiaries with hoses at the upper part of the plots are 1.42 m (Figure 20d), a total of up to 2.93 m (7 - 2.65 - 1.42) may be used for the friction losses in the secondaries and main.

Secondaries

All secondaries can be of the same size, as they carry the same flow, and they run parallel to the contours. Thus the head losses in the first part of each of the eastern secondaries are given by:

Q (serving	=	16.32 m^3/hr (8 x 2.04) plots 5,6,13,14,21,22,29,30)
L (eastern side)	=	36 m
D	=	90 mm uPVC (6)
HL (eastern side)	=	0.008 x 36 = 0.29 m

The head losses in the first part of the western secondaries are given by:

Q (serving	=	16.32 m^3/hr (8 x 2.04) plots 1,2,9,10,17,18,25,26)
L (western side)	=	40 m
D	=	90 mm uPVC (6)
HL (western side)	=	0.008 x 40 = 0.32 m

The second sections of the secondaries are all the same length at 76 m (36 + 4 + 36) and their head losses are calculated as follows:

Q	=	8.16 m^3/hr (serving plots 3,4,7,8,11,12, 15,16,19,20,23,24,27,28,31,32)
L	=	76 m
D	=	75 mm uPVC (6)
HL	=	0.0054 x 76 = 0.41 m

Thus, HL (total) for the secondary line is 0.70 m (0.41 + 0.29) for the eastern side or 0.73 m (0.41+ 0.32) for the western side.

Mainline

As discussed earlier, in this design the main starts at the take-off point of the first secondaries. Therefore the friction losses are:

Q	=	32.64 m^3/hr
L	=	304 m
D	=	140 mm PVC (6)
HL	=	0.0032 x 304 = 0.97 m.

Thus HL for the mainline is 0.97 m.

The balance of allowable pressure variation was established to be 2.93 m for use as main and secondary pipeline friction losses. The actual friction turned out to be 1.67 m (0.70 + 0.97) for the eastern side and 1.70 m (0.73 + 0.97) for the western side, both of which are within the limit. This means that the selection of pipe sizes has been done in such a way that the whole scheme becomes a hydraulic unit. However, it is necessary to confirm this for all plots, since only a few plots were used to arrive at this conclusion. Checking the hydraulics of each plot will have to be done.

Hydraulics of individual plots in relation to the total allowable pressure variation

Table 20 is generated in the same way as Table 16. The data from Table 20 show that the pressure variability of each plot is within the limit of 7 metres. However, while the total pressure variation of plots 17-32 is close to the limit, that of plots 1-16 is so far from the limit that smaller pipes can be used to increase the friction to as close to the limit as is possible. In this way, saving can be made in the costs of the pipes, without exceeding the recommended pressure variation.

The first change to consider is the reduction of the size of all secondaries serving plots 1-16 from 90 mm and 75 mm

Table 20

Pressure variation on a plot by plot basis – first attempt (drag-hose sprinkler system for smallholders)

Plot No.	HL Main	HL Secondary	HL Tertiary Set of hoses at position 1 (m)	HL Tertiary Set of hoses at position 2 (m)	Difference in Elevation		Total Pressure Variation	
					pos. 1 (m)	pos. 2 (m)	pos. 1 (m)	pos. 2 (m)
1	-	0.32	0.87	2.17	-0.15	-0.40	1.04	2.09
2	-	0.32	1.57	2.87	-0.50	-0.90	1.39	2.25
3	-	0.73	0.87	2.17	-0.10	-0.40	1.50	2.50
4	-	0.73	1.57	2.87	-0.65	-1.00	1.65	2.60
5	-	0.29	0.87	2.17	-0.10	-0.40	1.06	2.06
6	-	0.29	1.57	2.87	-0.55	-0.80	1.31	2.36
7	-	0.70	0.87	2.17	0.00	-0.20	1.57	2.67
8	-	0.70	1.57	2.87	-0.40	-0.75	1.87	2.82
9	-	0.32	0.25	0.72	0.10	0.35	0.67	1.39
10	-	0.32	0.65	1.42	0.50	0.65	1.47	2.39
11	-	0.73	0.25	0.72	0.20	0.25	1.18	1.70
12	-	0.73	0.65	1.42	0.40	0.65	1.78	2.80
13	-	0.29	0.25	0.72	0.10	0.35	0.64	1.36
14	-	0.29	0.65	1.42	0.40	0.70	1.34	2.41
15	-	0.70	0.25	0.72	0.15	0.35	1.10	1.77
16	-	0.70	0.65	1.42	0.60	0.75	1.95	2.87
17	0.97	0.32	0.87	2.17	1.60	1.25	3.76	4.71
18	0.97	0.32	1.57	2.87	1.00	0.80	3.86	4.96
19	0.97	0.73	0.87	2.17	1.60	1.30	4.17	5.17
20	0.97	0.73	1.57	2.87	1.00	0.70	4.27	5.27
21	0.97	0.29	0.87	2.17	1.70	1.40	3.83	4.83
22	0.97	0.29	1.57	2.87	1.20	0.90	4.03	5.02
23	0.97	0.70	0.87	2.17	1.60	1.35	4.14	5.19
24	0.97	0.70	1.57	2.87	1.10	0.85	4.34	5.39
25	0.97	0.32	0.25	0.72	2.05	2.20	3.59	4.21
26	0.97	0.32	0.65	1.42	2.25	2.55	4.19	5.26
27	0.97	0.73	0.25	0.72	1.90	2.10	3.85	4.52
28	0.97	0.73	0.65	1.42	2.30	2.55	4.65	5.67
29	0.97	0.29	0.25	0.72	2.00	2.20	3.51	4.18
30	0.97	0.29	0.65	1.42	2.30	2.45	4.21	5.13
31	0.97	0.70	0.25	0.72	1.90	2.15	3.82	4.54
32	0.97	0.70	0.65	1.42	2.40	2.60	4.72	5.69

to 63 mm and 50 mm respectively. The friction losses would then be:

Q = 16.32 m^3/hr (8 x 2.04) (plots 5,6,13,14)
L (eastern side) = 36 m
D = 63 mm uPVC (6)

HL (eastern side) = 0.04 x 36 = 1.44 m

The head losses in the first part of the western secondaries are given by:

L (eastern side) = 36 m
Q = 16.32 m^3/hr (8 x 2.04) (plots 1,2,9,10)
L (western side) = 40 m
D = 63 mm uPVC (6)

HL (western side) = 0.004 x 40 = 1.60 m

The second sections of the secondaries are all the same length at 76 m (36 + 4 + 36) and their head losses are calculated as follows:

Q = 8.16 m^3/hr (plots 3,4,7,8,11,12,15,16)
L = 76 m
D = 63 mm uPVC (6)

HL = 0.0124 x 76 = 0.94 m

Thus, HL (total) for the secondary line is 2.38 m (eastern side) or 2.54 m (western side)

By changing the tertiaries of plots 9-16 and 25-32 to 40 mm an additional saving in capital cost can be achieved. The friction losses would be calculated as follows for the two uphill positions of the hoses:

Uphill flow: Hoses at lower part of plot or nearest to secondary (Figure 20c, Position 1)

Q (m^3/hr)	L (m)	D (mm)	Pipe Class	uPVC Hf (m/100m)	HL (m)
4.08	6	40	6	3.60	0.22
3.40	12	40	6	2.50	0.30
2.72	12	40	6	1.75	0.21
				Sub-total	**0.73**
2.04	52(6+4+6+3x12)	40	6	1.20	0.62
1.36	12	40	6	0.50	0.06
0.68	12	40	6	0.17	0.02
				Total friction losses	**1.43**

Uphill flow: Hoses at upper part of plot or furthest from secondary (Figure 20d, Position 2)

Q (m^3/hr)	L (m)	D (mm)	Pipe Class	uPVC Hf (m/100m)	HL (m)
4.08	42(3x12+6)	40	6	3.60	1.51
3.40	12	40	6	2.50	0.30
2.72	12	40	6	1.75	0.21
				Sub-total	**2.02**
2.04	52(6+4+6+3x12)	40	6	1.20	0.62
1.36	12	40	6	0.50	0.06
0.68	12	40	6	0.17	0.02
				Total friction losses	**1.57**

Table 21 summarizes the plot by plot pressure variation after the changes in pipe sizes of the first two second-aries and the tertiaries of plots 9-16 and 25-32.

Table 21

Pressure variation on a plot by plot basis after changes in size of secondaries and tertiaries (drag-hose sprinkler system for smallholders)

Plot No.	HL Main	HL Secondary	HL Tertiary Set of hoses at position 1 (m)	HL Tertiary Set of hoses at position 2 (m)	Difference in Elevation		Total Pressure Variation	
					pos. 1 (m)	pos. 2 (m)	pos. 1 (m)	pos. 2 (m)
1	-	1.60	0.87	2.17	-0.15	-0.40	2.32	3.37
2	-	1.60	1.57	2.87	-0.50	-0.90	2.67	3.57
3	-	2.54	0.87	2.17	-0.10	-0.40	3.31	4.31
4	-	2.54	1.57	2.87	-0.65	-1.00	3.46	4.41
5	-	1.44	0.87	2.17	-0.10	-0.40	2.91	3.21
6	-	1.44	1.57	2.87	-0.55	-0.80	2.46	3.51
7	-	2.38	0.87	2.17	0.00	-0.20	3.25	4.35
8	-	2.38	1.57	2.87	-0.40	-0.75	3.55	4.50
9	-	1.60	0.73	2.02	0.10	0.35	2.43	3.97
10	-	1.60	1.43	2.72	0.50	0.65	3.53	4.97
11	-	2.54	0.73	2.02	0.20	0.25	3.47	4.81
12	-	2.54	1.43	2.72	0.40	0.65	4.37	5.91
13	-	1.44	0.73	2.02	0.10	0.35	2.27	3.81
14	-	1.44	1.43	2.72	0.40	0.70	3.27	4.86
15	-	2.38	0.73	2.02	0.15	0.35	3.26	4.75
16	-	2.38	1.43	2.72	0.60	0.75	4.40	5.86
17	0.97	0.32	0.87	2.17	1.60	1.25	3.76	4.71
18	0.97	0.32	1.57	2.87	1.00	0.80	3.86	4.96
19	0.97	0.73	0.87	2.17	1.60	1.30	4.17	5.17
20	0.97	0.73	1.57	2.87	1.00	0.70	4.27	5.27
21	0.97	0.29	0.87	2.17	1.70	1.40	3.83	4.83
22	0.97	0.29	1.57	2.87	1.20	0.90	4.03	5.03
23	0.97	0.70	0.87	2.17	1.60	1.35	4.14	5.19
24	0.97	0.70	1.57	2.87	1.10	0.85	4.34	5.39
25	0.97	0.32	0.73	2.02	2.05	2.20	4.07	5.51
26	0.97	0.32	1.43	2.72	2.25	2.55	4.97	6.24
27	0.97	0.73	0.73	2.02	1.90	2.10	4.33	5.82
28	0.97	0.73	1.43	2.72	2.30	2.55	4.00	6.97
29	0.97	0.29	0.73	2.02	2.00	2.20	3.99	5.48
30	0.97	0.29	1.43	2.72	2.30	2.45	4.99	6.43
31	0.97	0.70	0.73	2.02	1.90	2.15	4.30	5.84
32	0.97	0.70	1.43	2.72	2.40	2.60	5.50	6.99

Figure 21

Layout of a drag-house sprinkler system based on a 12 m x 12 m spacing (after modifications to provide for the allowable pressure variation)

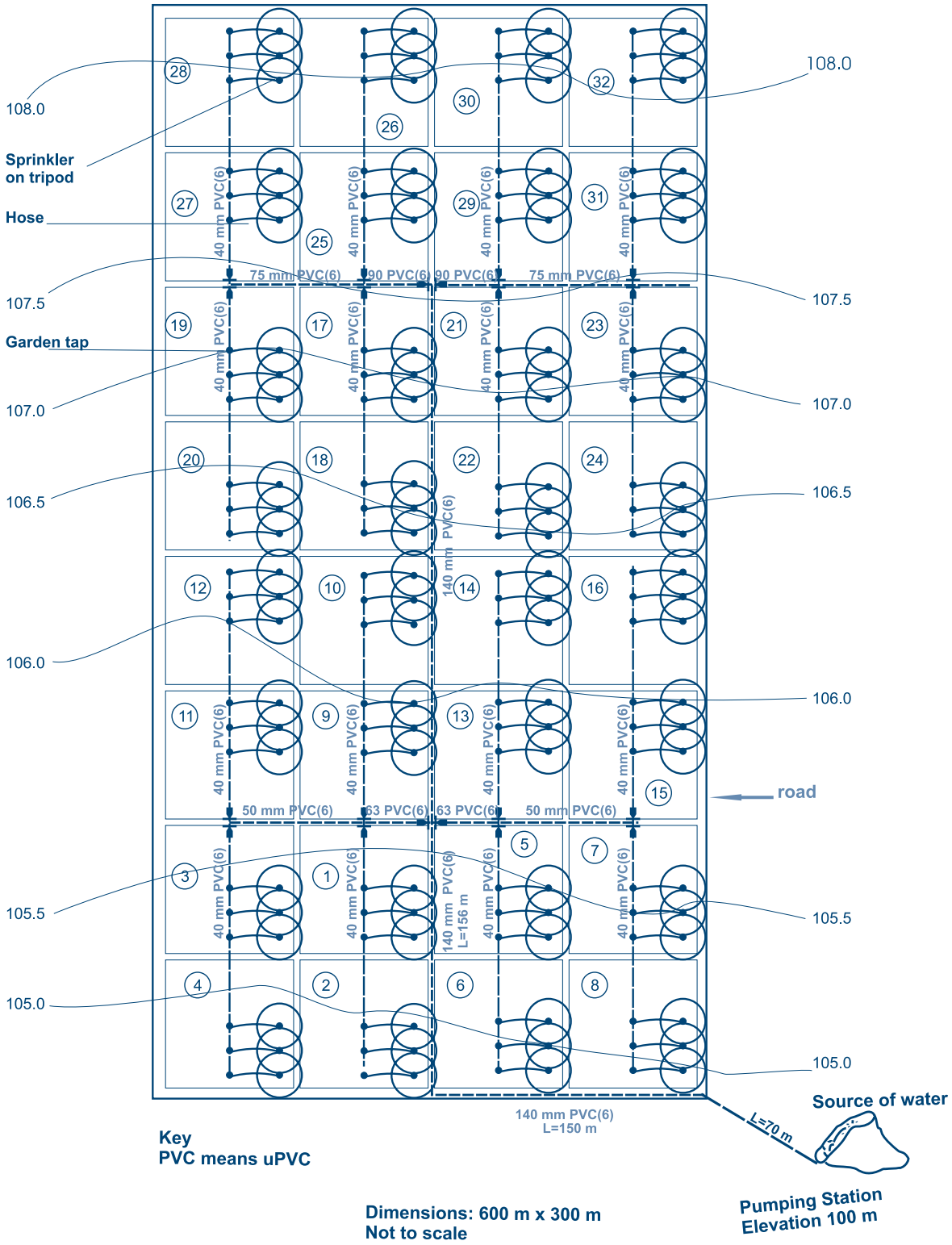

Figure 21 shows the final pipe sizes for the drag hose scheme after modifications to provide for the allowable pressure variations had been done.

Total head requirements

The total head requirements summarized in Tables 22 and 23 comprise:

- the suction
- the friction losses of the supply and main line
- the friction losses of the secondary and tertiary lines
- the friction losses of the hose
- the difference in elevation between the water source and the position of the operating sprinklers
- the height and friction losses in the riser
- the sprinkler operating pressure
- the friction losses in fittings

In order to compile Tables 22 and 23, showing the individual components of the total head for each plot, the suction lift, the friction losses in the supply line, the main, the secondary, the tertiary as well as the friction losses in

Table 22

Total head requirements of a drag-hose sprinkler system for smallholders on a plot by plot basis when hoses operate near the secondary (Figures 20a and 20c)

Plot No.	Suction Lift (m)	HL Supply Line (m)	HL Main (m)	HL Secondary (m)	HL Tertiary (m)	HL Hose (m)	Riser (m)	Sprinkler Operating Pressure (m)	HL Fittings 10% (m)	Difference in Elevation * (m)	HL Total (m)
1	2.0	4.14	-	1.60	0.87	0.98	2.50	35	4.71	5.45	57.3
2	2.0	4.14	-	1.60	1.57	0.98	2.50	35	4.78	5.10	57.7
3	2.0	4.14	-	2.54	0.87	0.98	2.50	35	4.80	5.40	58.2
4	2.0	4.14	-	2.54	1.57	0.98	2.50	35	4.87	4.95	58.6
5	2.0	4.14	-	1.44	0.87	0.98	2.50	35	4.69	5.45	57.1
6	2.0	4.14	-	1.44	1.57	0.98	2.50	35	4.76	5.05	57.4
7	2.0	4.14	-	2.38	0.87	0.98	2.50	35	4.79	5.60	58.3
8	2.0	4.14	-	2.38	1.57	0.98	2.50	35	4.86	5.20	58.6
9	2.0	4.14	-	1.60	0.73	0.98	2.50	35	4.70	5.70	57.4
10	2.0	4.14	-	1.60	1.43	0.98	2.50	35	4.77	6.05	58.5
11	2.0	4.14	-	2.54	0.73	0.98	2.50	35	4.79	5.70	58.4
12	2.0	4.14	-	2.54	1.43	0.98	2.50	35	4.86	6.00	59.5
13	2.0	4.14	-	1.44	0.73	0.98	2.50	35	4.68	5.70	57.2
14	2.0	4.14	-	1.44	1.43	0.98	2.50	35	4.75	6.15	58.4
15	2.0	4.14	-	2.38	0.73	0.98	2.50	35	4.77	5.75	58.3
16	2.0	4.14	-	2.38	1.43	0.98	2.50	35	4.84	6.20	59.5
17	2.0	4.14	0.97	0.32	0.87	0.98	2.50	35	4.68	7.15	58.6
18	2.0	4.14	0.97	0.32	1.57	0.98	2.50	35	4.75	6.45	58.7
19	2.0	4.14	0.97	0.73	0.87	0.98	2.50	35	4.72	7.20	59.1
20	2.0	4.14	0.97	0.73	1.57	0.98	2.50	35	4.79	6.55	59.2
21	2.0	4.14	0.97	0.29	0.87	0.98	2.50	35	4.68	7.20	58.6
22	2.0	4.14	0.97	0.29	1.57	0.98	2.50	35	4.75	6.70	58.9
23	2.0	4.14	0.97	0.70	0.87	0.98	2.50	35	4.72	7.20	59.1
24	2.0	4.14	0.97	0.70	1.57	0.98	2.50	35	4.79	6.60	59.3
25	2.0	4.14	0.97	0.32	0.73	0.98	2.50	35	4.66	7.65	59.0
26	2.0	414	0.97	0.32	1.43	0.98	2.50	35	4.73	7.85	59.9
27	2.0	4.14	0.97	0.73	0.73	0.98	2.50	35	4.71	7.60	59.4
28	2.0	4.14	0.97	0.73	1.43	0.98	2.50	35	4.78	7.95	60.5
29	2.0	4.14	0.97	0.29	0.73	0.98	2.50	35	4.66	7.60	58.9
30	2.0	4.14	0.97	0.29	1.43	0.98	2.50	35	4.73	7.95	60.0
31	2.0	4.14	0.97	0.70	0.73	0.98	2.50	35	4.70	7.60	59.3
32	2.0	4.14	0.97	0.70	1.43	0.98	2.50	35	4.77	8.05	60.5

** The difference in elevation is the height difference between the eye of the impeller and the ground level of the sprinkler.*

Table 23

Total head requirements of a drag-hose sprinkler system for smallholders on a plot by plot basis when hoses operate far from secondary (Figures 20b and 20d)

Plot No.	Suction Lift (m)	HL Supply Line (m)	HL Main (m)	HL Secondary (m)	HL Tertiary (m)	HL Hose (m)	Riser (m)	Sprinkler Operating Pressure (m)	HL Fittings 10% (m)	Difference in Elevation * (m)	HL Total (m)
1	2.0	4.14	-	1.60	2.17	0.98	2.50	35	4.84	5.20	58.4
2	2.0	4.14	-	1.60	2.87	0.98	2.50	35	4.91	4.65	58.7
3	2.0	4.14	-	2.54	2.17	0.98	2.50	35	4.93	5.20	59.5
4	2.0	4.14	-	2.54	2.87	0.98	2.50	35	5.00	4.60	59.6
5	2.0	4.14	-	1.44	2.17	0.98	2.50	35	4.82	5.20	58.3
6	2.0	4.14	-	1.44	2.87	0.98	2.50	35	4.89	4.75	58.6
7	2.0	4.14	-	2.38	2.17	0.98	2.50	35	4.92	5.35	59.4
8	2.0	4.14	-	2.38	2.87	0.98	2.50	35	4.99	4.85	59.7
9	2.0	4.14	-	1.60	2.02	0.98	2.50	35	4.82	5.95	59.0
10	2.0	4.14	-	1.60	2.72	0.98	2.50	35	4.89	6.25	60.1
11	2.0	4.14	-	2.54	2.02	0.98	2.50	35	4.92	5.85	60.0
12	2.0	4.14	-	2.54	2.72	0.98	2.50	35	4.99	6.25	61.1
13	2.0	4.14	-	1.44	2.02	0.98	2.50	35	4.81	5.95	58.8
14	2.0	4.14	-	1.44	2.72	0.98	2.50	35	4.88	6.35	60.0
15	2.0	4.14	-	2.38	2.02	0.98	2.50	35	4.90	5.95	59.9
16	2.0	4.14	-	2.38	2.72	0.98	2.50	35	4.97	6.53	61.2
17	2.0	4.14	0.97	0.32	2.17	0.98	2.50	35	4.81	6.85	59.7
18	2.0	4.14	0.97	0.32	2.87	0.98	2.50	35	4.88	6.30	60.0
19	2.0	4.14	0.97	0.73	2.17	0.98	2.50	35	4.85	6.90	60.2
20	2.0	4.14	0.97	0.73	2.87	0.98	2.50	35	4.92	6.30	60.4
21	2.0	4.14	0.97	0.29	2.17	0.98	2.50	35	4.81	6.95	59.8
22	2.0	4.14	0.97	0.29	2.87	0.98	2.50	35	4.88	6.45	60.1
23	2.0	4.14	0.97	0.70	2.17	0.98	2.50	35	4.85	6.95	60.3
24	2.0	4.14	0.97	0.70	2.87	0.98	2.50	35	4.92	6.45	60.5
25	2.0	4.14	0.97	0.32	2.02	0.98	2.50	35	4.79	7.70	60.4
26	2.0	414	0.97	0.32	2.72	0.98	2.50	35	4.86	8.15	61.6
27	2.0	4.14	0.97	0.73	2.02	0.98	2.50	35	4.83	7.70	60.9
28	2.0	4.14	0.97	0.73	2.72	0.98	2.50	35	4.90	8.15	62.1
29	2.0	4.14	0.97	0.29	2.02	0.98	2.50	35	4.79	7.70	60.4
30	2.0	4.14	0.97	0.29	2.72	0.98	2.50	35	4.86	8.05	61.5
31	2.0	4.14	0.97	0.70	2.02	0.98	2.50	35	4.83	7.75	60.9
32	2.0	4.14	0.97	0.70	2.72	0.98	2.50	35	4.90	8.25	62.1

** The difference in elevation is the height difference between the eye of the impeller and the ground level of the sprinkler*

the hose and the height and friction losses in the riser and the sprinkler operating pressure were calculated.

The friction losses in the supply line are calculated as follows, using the graphs of Figure 8:

Q = 65.28 m^3/hr

L = 376 m (70 m from the pumping station to the field edge plus 150 m from the field edge to the middle of the field plus 156 m to the first set of secondaries

D = 140 mm PVC (6)

HL = 0.011 x 376 = 4.14 m.

The data of Tables 22 and 23 show that the highest head (62.1 m) would be required when the sprinklers of plot 32 operate far from the secondary. Hence the pumping system should provide 60.1 m (62.1 m including suction lift) at the pump outlet. This is just above the pressure rating of the uPVC class 6 pipes which were selected. Therefore, a small portion of uPVC 140 mm class 6 should be changed to class 10. The length should be such that its head losses plus the elevation difference from the pump equals at least 0.1 m

which is the pressure in excess of the rating of class 6. Looking at the elevation difference of 4.7 m (between the pump and the edge of the field in a distance of 70 m the slope is 6.7%. Assuming that we exchange the first 6 m of class 6 with class 10 uPVC 140 mm, then 0.4 m (6.7 x 0.06) head would have been consumed from the elevation difference alone. On this the difference of HL between the class 6 and class 10 pipe should be added.

Q = 65.28 m^3/hr
L = 6 m
D = 140 mm PVC (10)

HL = 0.012 x 6 = 0.072 m for class 10
HL = 0.011 x 6 = 0.066 m
HL difference = 0.006 m, which is negligible and as such, ignored.

Power requirements

Using Equations 8 and 9, the power requirements are calculated as follows:

$$\text{Power requirements in BHP} = \frac{65.2 \times 62.1}{273 \times 0.6} = 24.75$$

or

$$\text{Power requirements in kW} = \frac{65.28 \times 62.1}{360 \times 0.6} = 18.77$$

By applying 20% for losses a prime mover of 29.7 BHP (1.80 BHP/ha) or 22.5 kW (1.36 kW/ha) would be required. Again, the power requirements are similar to those calculated for the other systems.

3.3. Bill of quantities

Upon the completion of the design, drawings showing the various components of a sprinkler system will have to be made. These drawings refer to connections of fittings, valves and other accessories that would be required for construction. From these drawings, a list of the required items can be compiled. The design map, as derived from the layout and the hydraulics, should be used to determine the lengths, sizes and types as well as classes of pipes to be used. A list of these together with the list of fittings derived from the drawings and the pumping plant forms the bill of quantities. If other structures related to the project are required, they are included in the designs. These could be toilets within the irrigated area, new settlements, clean water supplies such as boreholes, in-field access roads, drains, drain-road crossings, cattle troughs, fencing and others. All these structures should be included in the bill of quantities.

Another component of the bill of quantities is the labour required to carry out construction activities. The main construction activities for sprinkler irrigation will be the excavation of pipe trenches, pipe-fitting and back-filling of trenches. Roads and drains also have to be graded. Most of the work can be done by either machines or human labour. For the purpose of this module we are going to assume that manual labour will be used in order to encourage farmer participation in construction activities. The use of machines for road and drain construction is covered in Module 13.

Referring to the example of the design maps, separate bills of quantities will be prepared for the semi-portable system for an individual farmer, the semi-portable for a group of smallholder farmers and the drag-hose for a group of smallholder farmers. These bills of quantities can be used for costing the different options discussed.

3.3.1. System components for semi-portable and drag-hose irrigation systems.

The various pipes, fittings, pumping unit and other accessories constitute the components of the irrigation system. This section will identify some of the common components of the semi-portable and drag-hose systems with specific reference to the designs done. These components are by no means exhaustive in terms of alternatives that could be used. They have to be directly derived from the design. Therefore, they will depend on which pipe types and friction loss charts the designer was using during the hydraulic design. The following sections present the common fittings associated with AC, uPVC and aluminium pipes.

AC and common fittings used with this pipe

As mentioned earlier AC pipes come in 4 metres length. Their working pressures and classes are shown in Table 13. Two types of fittings, the AC fittings and cast iron fit-tings, are normally used with AC pipes. As a rule where valves and non-AC fittings need to be introduced in a pressure system, cast iron fittings are used. In addition, where provision for fast repairs is required cast iron joints can be used to connect two lengths of AC pipes. Figure 22 shows some of the most commonly used fittings in irrigation.

The fluid-tite joints (Figure 22a) are AC fittings used to connect two AC pipes of the same size. They come with two rubber rings (one for each pipe end) that seal the connection. When repairs are required for a pipe in the middle of an AC line that has been laid down using the fluid-tite joints, a new pipe length can only be inserted if cast iron short collar detachable joints (Figure 22b) are used. Bends of 90 degrees (Figure 22c) or 45 degrees are used when deviations from the straight line are called for. Some engineers prefer to combine cast iron bends with detachable joints for strength and flexibility purposes. Cast

Figure 22
Asbestos cement and cast iron fittings

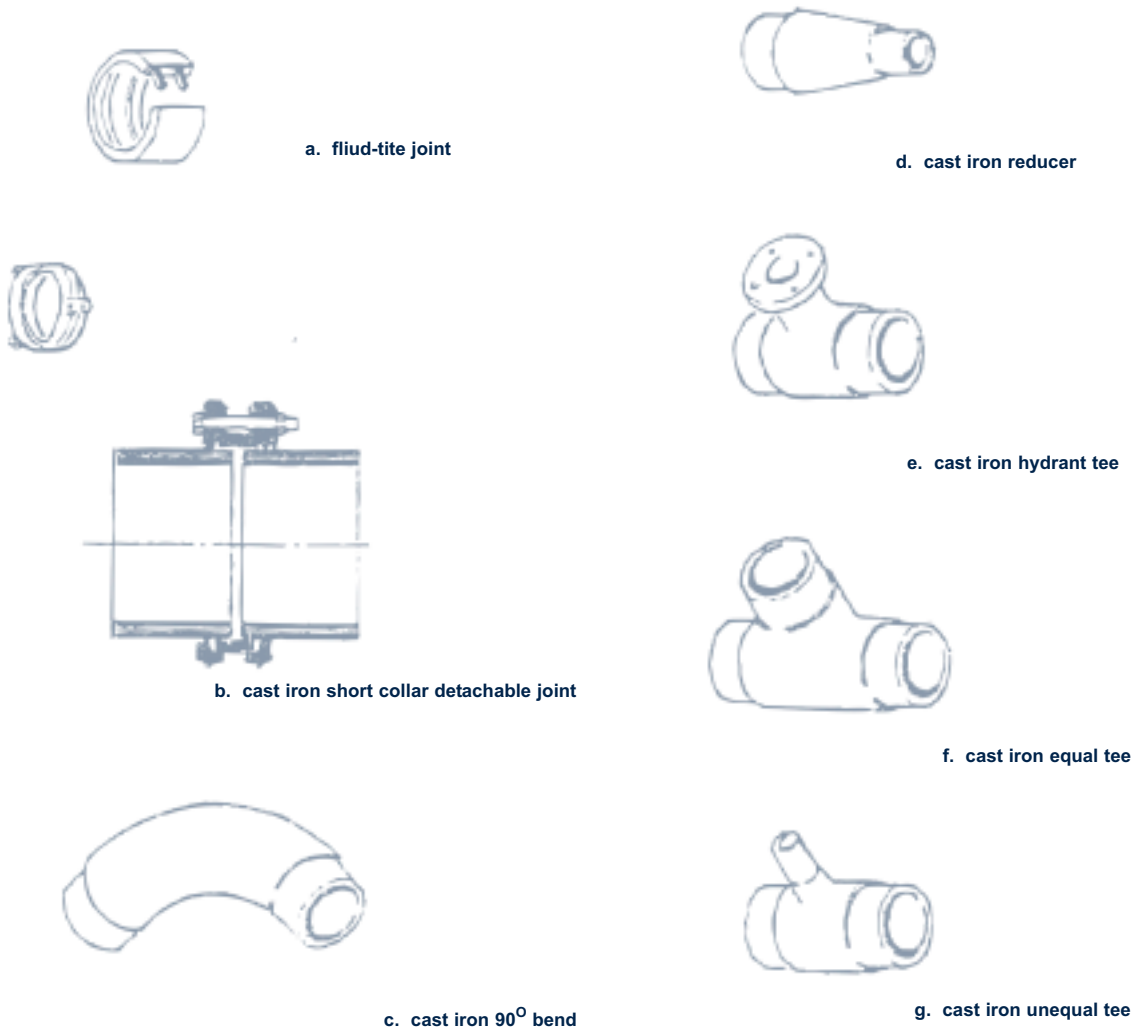

iron reducers (Figure 22d) are used when a change in pipe size is called for. It is advisable to combine it with detachable joints for flexibility purposes. Cast iron hydrant tees (Figure 22e) are used where flanged valves are required on the middle branch of the tee. these tees are commonly used in commercial one-owner semi-portable sprinkler systems to connect a steel zisers with a hydrant on the top. They are also combined with detachable joints. Cast iron equal tees (Figure 22f) are used for branch-ing, without valves, to an equal size of pipe while cast iron unequal tees (Figure 22g) are used where a reduction of size is required for the middle branch.

Steel pipes and common fittings used with this pipe

Steel pipes are commonly used in irrigation systems for water conveyance. However, because of their very high cost per unit (metre) they tend to be used over short distances, for example when crossing roads, gullies or spillways, where use of either uPVC or AC is restricted by rugged terrain. The most commonly used sizes are 75 mm to 200 mm. To protect the steel from corrosive material (e.g. saline water), the steel pipes are galvanized by hot dipping in zinc.

Steel pipes can be either seamless or welded. The specifications as to pipe size (both outside diameter (OD) and inside diameter (ID)), wall thickness of pipe, minimum yield strength and ultimate bursting pressures are available from the pipe manufacturers. The specification of the pipe size and thickness will depend upon the operating head and flow. Steel pipes come in 6 metres or 9 metres length. Jointing of steel pipes is achieved by the use of flanges or Viking joints.

uPVC pipes and common fittings used with this pipe

uPVC pipes come in six metres length. The most commonly available uPVC pipes fall in four classes. Table 14 presents the working pressure of each class. All uPVC fittings as a rule are rated at class 16 level. The most

commonly used sizes are 25 mm to 250 mm. All uPVC pipes and fittings should be buried, even if they are treated against the ultraviolet light range. Prolonged exposure to UV rays causes the pipes to become brittle. A change in colour of the uPVC pipe indicates prolonged unshaded storage. Hence, the requirement for covered storage of uPVC pipes.

The most common uPVC fittings used with uPVC pipes are shown in Figure 23. While adaptor types with rubber rings are used in some countries, the most common fitting in others are the solvent welding fittings, combined with threaded fitting where connection with valves and steel fittings are required. Bends 90 degrees (SIV) (Figure 23a) or 45 degrees are used where deviation from the straight line is required. Tees (TIV) (Figure 23b) have the same diameter on the three branches. Crosses (XIV) (Figure 23c) can be very useful where two secondaries are branching from the main line, or two laterals from a secondary. Reducing bushings (DIV) (Figure 23d) are used when change in size is required. End caps (CIV) (Figure 23e) are used when the end of a pipe must be permanently closed. Tees with two plain sides for solvent welding and the middle outlet with female thread (TIFV) (Figure 23f) are used where threaded steel fittings are required. These fittings as

Figure 23
uPVC fittings

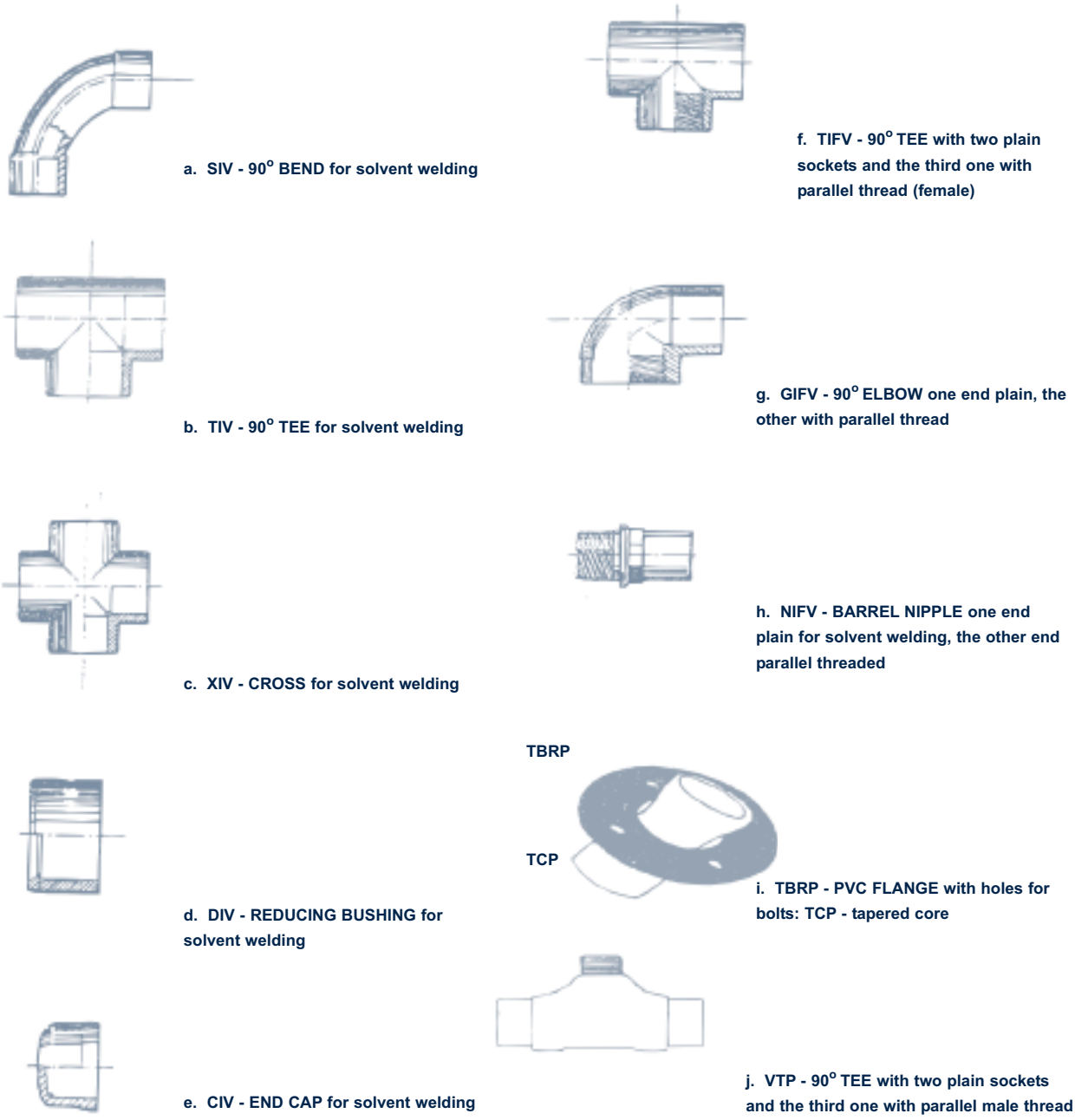

well as the GIFV (Figure 23g) are used where the steel risers for water taps are fitted in a drag-hose system or where risers for valve hydrant are required for the semi-portable systems. Barrel nipples (NIFV) with one side plain for solvent welding and the other side with male thread (Figure 23h) can be used to connect a brass gate valve on a tee. In some countries, fabri-cated tees (VTP) (Figure 23j) are used for this pur-pose. Another set of useful fittings is the flange (TBRP) (Figure 23i) which, combined with the tapered core (TCP), can allow the connection of flanged items like cast iron valves to the system.

Aluminium pipe and fittings

Aluminium pipes as a rule are used for the portable part of a semi-portable sprinkler system, that is the lateral. Aluminium pipes are also used in completely portable systems. Aluminium pipes normally come in 6 and 9 metres lengths, but other lengths are also available depending on the country. Each portable pipe comes with a press-on coupler on the one side and a saddled hook on the other side. Figure 24 shows some common aluminium fittings.

Where sprinkler risers are connected on the coupling, a riser assembly will be re-quired so that the riser together with the sprinkler can be removed for easy transport to the next position. Under the coupling with the riser assembly, a stabilizing batten will be required. Another set of necessary fittings for semi-portable sprinkler systems includes the valve hydrant and valve control elbow.

Figure 24
Aluminium fitting for protable sprinkler lines

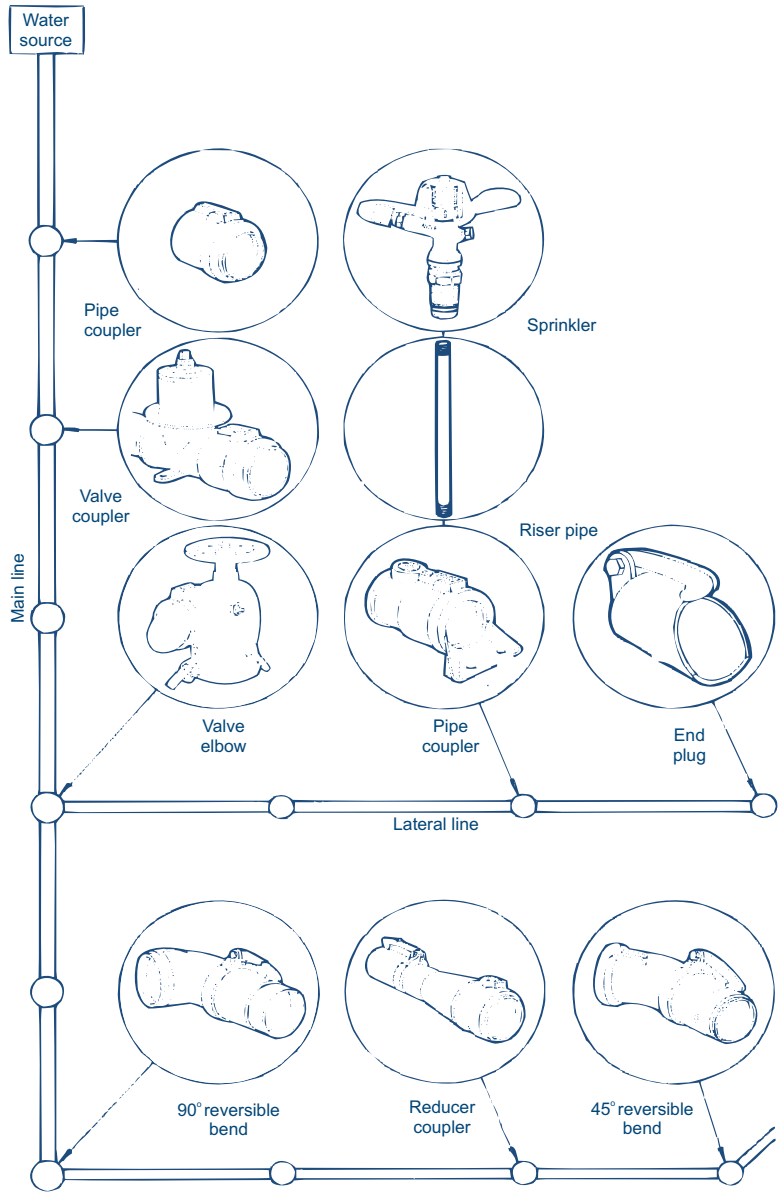

Fiberglass pipes and fittings

The use of fiberglass pipes is gaining popularity. One of the major advantages of the fiberglass pipes is its resistance to corrosion and UV. Therefore it can be installed on the surface or be buried. Fiberglass pipes come in 6, 12 and 18 metres standard lengths and pressure classes 1, 6, 10, 16, 20, 25 and 32 representing 10, 60, 100, 160, 200, 250 and 320 metres pressure. The most commonly used sizes are 100 to 2400 mm in diameter. The pressure rating of fiberglass fittings is the same as that of the standard pipes.

Fiberglass pipes are most commonly joined using fiberglass couplers. The coupler uses a gasket for sealing. The gasket is located in a groove at each end of the coupler. Figure 25

Figure 25
Fibreglass pipe joint using coupler

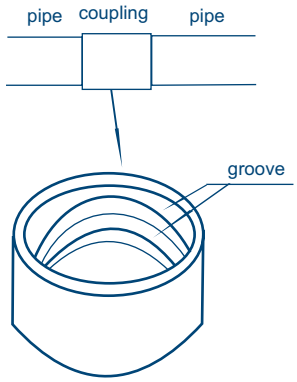

Figure 26
Common fibreglass fittings

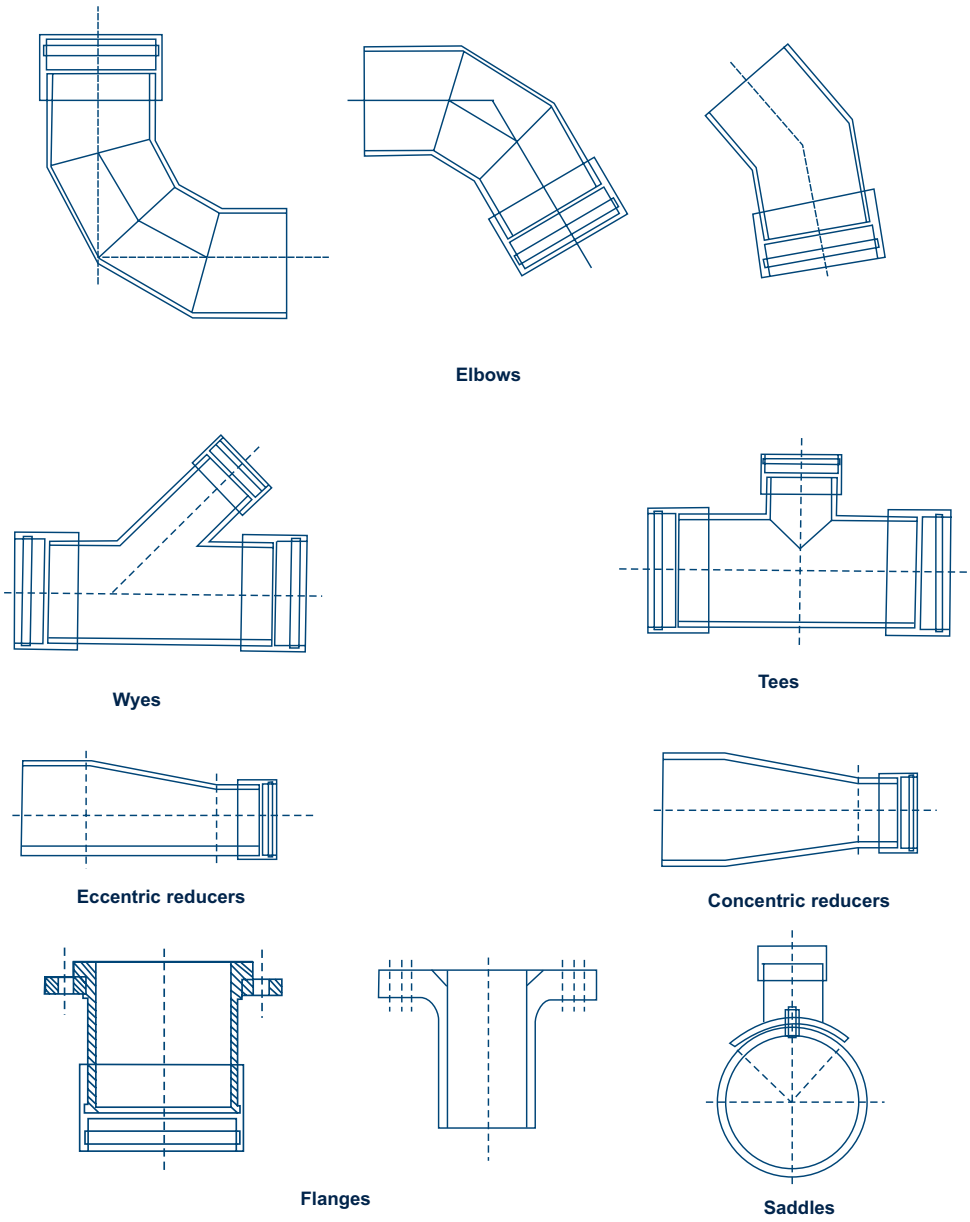

shows a coupler used to join fiberglass pipes. When connecting pipes with fiberglass flanges, one of the flanges will have a gasket in the face. Other types of couplers recommended for use in joining fiberglass pipes to pipes of other materials are steel couplings, with an interior rubber sealing sleeve. The most commonly used steel couplers are epoxy or PVC-coated steel, stainless steel or galvanized steel. It is important that the coupling be protected from corrosion. This is normally done by applying a shrink fit polyethylene sleeve over the installed coupling. Figure 26 shows a range of fibreglass fittings. Elbows are used for bends, wyes and tees for branching of pipelines, reducers

Figure 27
Drawings for a semi-portable sprinkler system for commercial farmers

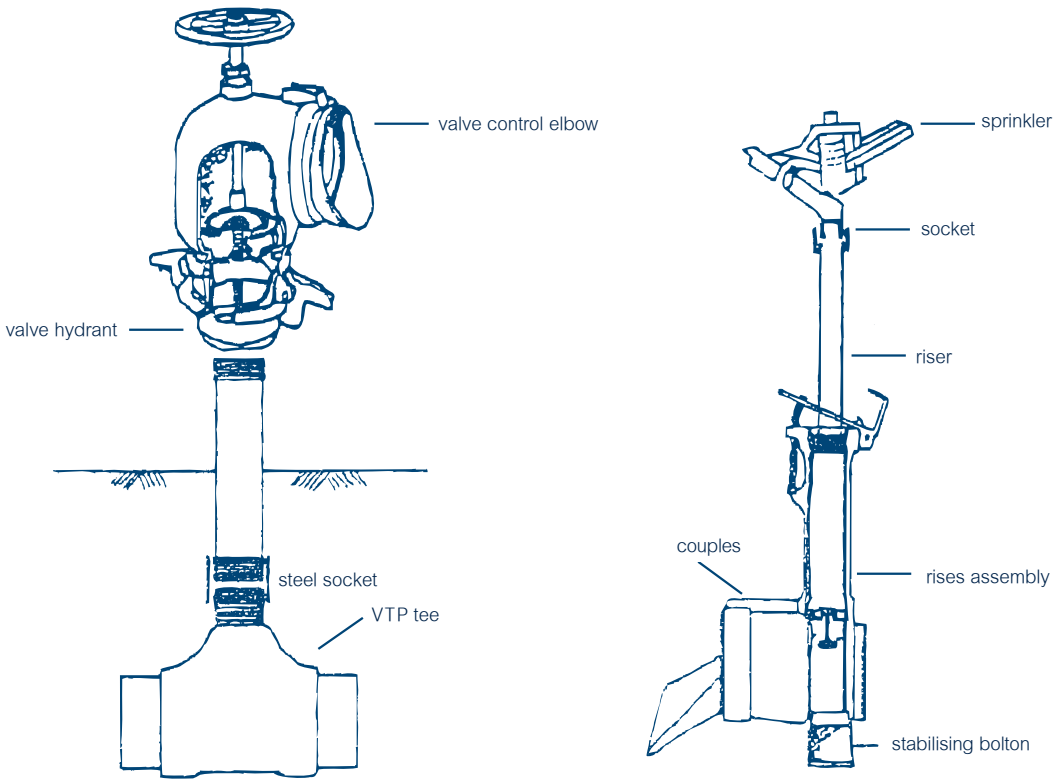

a. Valve hydrant and valve control elbow on riser

b. Riser assembly on aluminium coupling with riser and splinkler

Figure 28
Drawings for a semi-portable system for smallholder schemes

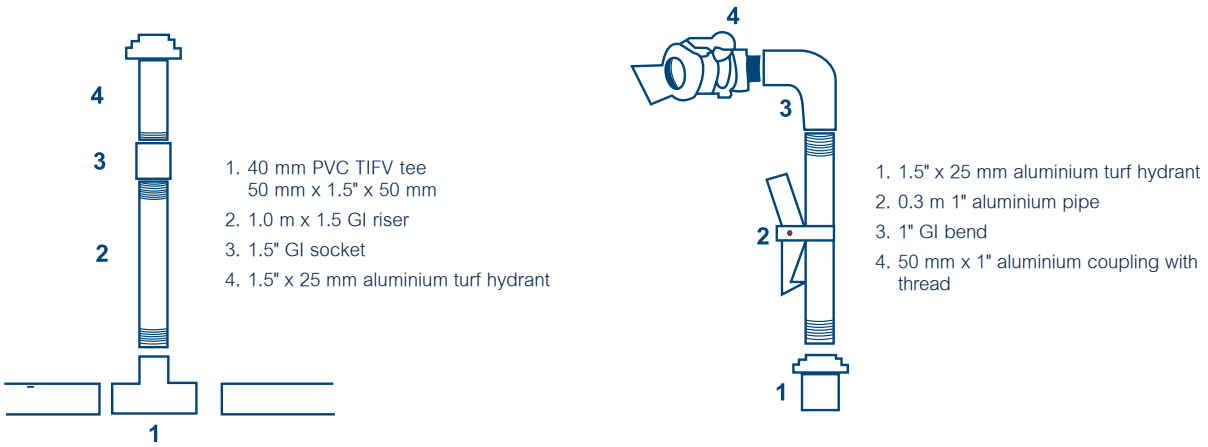

a. Turf hydrant on riser

b. Turf hydrant connection with aluminium coupling

Figure 29
Drawings for drag-hose system for smallholders

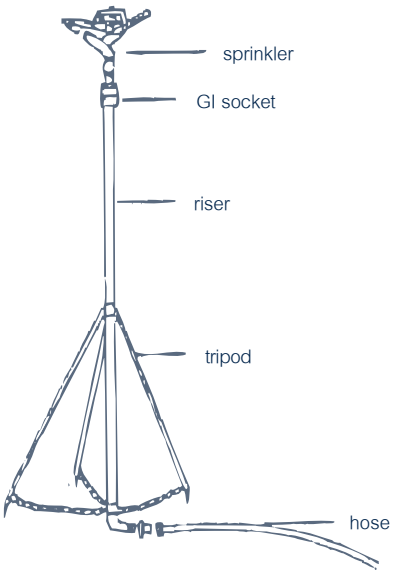

a. Sprinkler on riser and tripod connected to hose

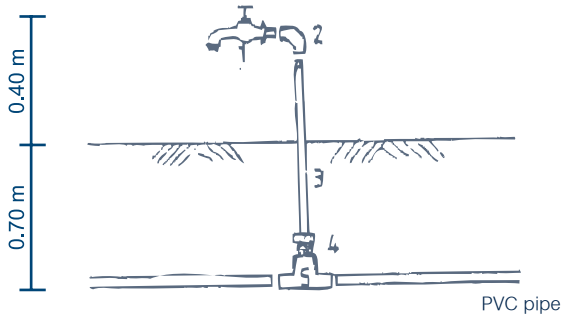

1. Garden tap
2. G1 Elbow 0.5"
3. G1 Riser 0.5"
4. G1 Reducing bush
5. TIFV PVC tee

b. Connection of garden tap to PVC lateral

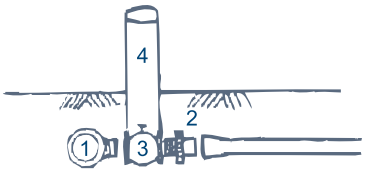

1. VTP 90° tee
2. NIFV barrel nipple
3. Gate valve
4. Vavle chamber

c. Connection of valve to PVC network

for changing pipe sizes, flanges for joining pipes and saddles where there is an outlet from a pipeline.

3.3.2. Map and drawings

By combining the design map with the drawings of the specialized components of a scheme, a list of pipes and fittings can be prepared.

Using the fittings of Figures 22, 23 and 24, drawings were prepared for a semi-portable for commercial farms (Figure 27), a semi-portable for smallholders (Figure 28) and a draghose for smallholders (Figure 29) sprinkler systems.

3.3.3. Estimation of labour requirements for construction activities

The construction of sprinkler irrigation systems involves mainly:

- setting out the irrigation layout
- trenching
- pipe laying
- back-filling
- pressure testing and final back-filling
- construction of in-field toilets for irrigators
- construction of in-field access roads and drains
- construction of drain-road crossings
- construction of a project fence for protection against animals
- any other structures necessary for that particular project

These activities are described in detail in Module 13. The sections below describe the derivation of labour requirements. The costs of labour are an input into the project bill of quantities in order to estimate project costs. The unit of labour will be referred to as workday, which is 8 hours long.

Setting out

In general, setting out is a process of transferring the design layout and elevations from the design map to the ground. However, for pressurized systems, there is no need to transfer the elevations to the ground. It is done by surveyors and technicians with survey equipment. The rate at which the surveyors set out the layout depends on their experience, the topography of the land, obstacles such as tall grass or trees and the equipment they use. Using simple survey equipment such as levels, one skilled surveyor and 4 assistants or unskilled labourers could set out an average of

about 1 600 m length of pipeline or road per workday. Drains and fence can be set out at the same time, since they are next to the road.

In our example, where the total area is about 18 hectares, the total distances to set out are:

1. Semi-portable irrigation system for an individual farm:
   - 1 800 m of access road plus drain and fence around the scheme
   - 841 m of pipeline

The total of 2 641 m is equivalent to about 1.7 (say 2) workdays of skilled labour, and 6.6 (say 7) workdays of unskilled labour. However, because of the joined settings of part of the south road with the pipe, the required labour can be reduced as follows:

   - 1 800 m of access road plus fence and drains around the scheme
   - 691 m (841-150) of pipeline

The total of 2 491 m of setting up can be achieved in 1.6 days. The surveyor's time would be two workdays and the unskilled labour 6 workdays.

2. Semi-portable irrigation system for a smallholder scheme:
   - 5 700 m of access road plus fence and drains around the scheme and plots
   - 3 220 m of pipeline, of which 1 062 m is located next to the roads to be set up at the same time as the setting up of the road takes place.

The total of 7 858 (5 700+3 220-1 062) m is equivalent to about 4.9 (say 5) surveyor workdays and 19.6 (say 20) workdays of unskilled labour.

3. Drag-hose irrigation system for a smallholder schemes have similar requirements as the semi-portable system for smallholders. They are as follows:
   - 5 700 m of access road drains and fence around the scheme
   - 3 436 m of pipeline, of which 1 062 m is located next to the road

The total of setting up 8 074 m (5 700 + 3436 - 1062) would then require 5 workdays for the surveyor and 20 days for unskilled labour.

Pipe laying

The rate at which pipe laying can be done depends on the type, size and weight of the pipe and therefore whether it is manually carried or not, the type of jointing required, the number of fittings within the line. For the purpose of this example where small sizes of uPVC pipes are used, it is expected that a group of 1 pipe fitter and 2 unskilled labourers can lay 1 000 m per day (167 pipes of 6 m long each). For larger sizes (250-500 mm), 2 extra unskilled labourers will be required and the output should be expected to be 500 m per day.

The labour for pipe laying is as follows:

1. For the semi-portable system for an individual farm:
   - 841 m of pipeline together with hydrants would require almost 1 workday for skilled and about 2 workdays for unskilled labour

2. Semi-portable system for a smallholder scheme:
   - 3 220 m of pipeline, based on 1 000 m per day, would require 3.2 workdays for skilled pipe fitters and 6.4 workdays for unskilled labour

3. Drag-hose system for the smallholder scheme will have similar requirements as the semi-portable system for smallholders, i.e. 3 436 m of pipeline requiring 3.4 workdays for skilled pipe fitters and 7 days for unskilled labour.

Access roads and drains

In-field roads can be constructed using small to medium size motorized graders depending on the job to be carried out. Towed graders can also be used where the cuts and fills are small, say less than 10 cm, but this also depends on the soil type. The rate at which the grader works depends on the soils, obstructions, grader blade size, speed of grader, and experience of operator, among other things. An average size grader with an experienced operator can do up to 200 m per machine hour of in-field roads. The roads in our example are typically 3.0 m wide and they have a drain of 0.5 m on each side. In some countries, however, because of land pressure the roads are limited to the perimeter and each plot has access through a path.

The machine hours for roads will be as follows, using an output of 200 m/machine hour:

1. Semi-portable system for an individual farm:
   - 1 800 m of access road would require 9 machine hours;

2. Semi-portable system for a smallholder scheme:
   - 5 700 m of access road require 28.5 machine hours

3. Drag-hose system for the smallholder scheme will have the same requirements as the semi-portable system for smallholders

Fencing

In places where livestock is not well paddocked, such as smallholder areas, it is necessary to erect a perimeter fence around the irrigated area. For our example, the length of the perimeter fence is 1 800 m (2 x 300 m + 2 x 600 m). The type of fencing will depend on what animals the project has to be protected from. In this example, it will be assumed that the project is being protected against small animals, such as goats. Therefore, pignetting will be used. The number, size and siting of gates should allow easy access to the scheme by both vehicles and the farmers.

Fencing requires both skilled and unskilled labour. A gang of about 1 skilled labourer and 4 unskilled labourers can erect an average of 1 000 m length of fence per day. For the three types of systems, each will require 1 800 m of fencing and therefore 1.8 skilled labour workdays and 7.2 unskilled labour workdays.

Trenching and back-filling

The depth and width of the trench is very important. As such, it is based on international or national standards. Standard ASAE EP340.2 recommends that the bottom width of the trench should not be more than 0.6 m wider than the pipe diameter, except when dealing with unstable soils.

With respect to the depth of the trench, the same standards require that uPVC pipes with diameters up to 63 mm should have a cover of at least 45 cm, pipes of 75 - 110 mm diameter should have a cover of at least 60 cm, while uPVC pipes with diameters larger than 110 mm should have a cover of at least 75 cm. However, the minimum cover for pipes above which traffic will pass shall be at least 75 cm, with a maximum of up to 1.2 m.

For AC pipes, the manufacturers recommend the following minimum cover irrespectively of pipe size: 45 cm for light load, 60 cm for medium load and 90 cm for heavy load. Therefore, by knowing the outside diameter of a pipe and the required cover the total depth of the trench can be calculated.

On average, an unskilled labourer can dig 6 metres of trench 0.6 m deep by 1 m wide per day in heavy soils. For the same soils, an unskilled labourer can dig only 3 metres trench of 1 metre depth. For 0.75 m depth 4 metres length of trench per day is considered reasonable.

For light soils the rate increases to 10 metres per day per unskilled labourer for the 0.6 m depth, 8 metres per day for the 0.75 m depth and 5 metres per day for the 1 m depth trench.

For medium type soils, apply 8 metres per day for the 0.6 m depth, 6 metres per day for the 0.75 m depth and 4 metres per day for the 1 m depth.

Backfilling would require half the labour required for trenching.

For the medium type soils of our example and the three different irrigation systems, the following trenching, backfilling and corresponding labour will be required.

1. Semi-portable for an individual farm:
   Pipe requirements:
   - 413 m uPVC 200 mm
   - 216 m uPVC 140 mm
   - 108 m uPVC 110 mm
   - 54 m uPVC 90 mm

Through the application of the ASAE standards, pipes larger than 110 mm should have a over of at least 75 cm. Therefore the trench for the 200 mm pipe should be at least 95 cm deep and the one for the 140 mm pipe should be at least 89 cm deep. To simplify construction, a depth of 1 m is adopted for the 140 mm and 200 mm pipes. The corresponding labour requirements would be 157 workday for the length of 629 metres.

For the pipe sizes 110 mm and 90 mm, the cover should be at least 60 cm. The corresponding trench depth would then be 69 cm for the 90 mm pipe and 71 cm for the 110 mm pipe. To simplify construction, a depth of 75 cm is adopted for both.

Therefore, the labour requirement for this trench would be 27 workdays. The total labour for trenching would be 184 workdays.

2. Semi-portable for smallholders:
   Pipe requirements:
   - 680 m uPVC 140 mm
   - 76 m uPVC 90 mm
   - 152 m uPVC 75 mm
   - 228 m uPVC 63 mm
   - 536 m uPVC 50 mm
   - 1 608 m uPVC 40 mm

For the same reasons explained earlier, the depth of trenching should be as follows:

140 mm pipe	1 metre depth
90 mm and 75 mm pipe	0.75 metre depth
40 mm, 50 mm and 63 mm pipes	0.6 metre depth

The corresponding labour workdays are as follows:

680 m ÷ 4	170
228 m ÷ 6	38
2 372 m ÷ 8	296.5
Total	504.5 workdays

3. Drag-hose for smallholders:

   Pipe requirements:

   680 m uPVC 140 mm
   76 m uPVC 90 mm
   152 m uPVC 75 mm
   76 m uPVC 63 mm
   152 m uPVC 50 mm
   2 336 m uPVC 40 mm

Table 24

Labour for setting out, pipe trenching, back-filling, fencing, road and drain construction for a semi-portable system for an individual farm of 18 ha

Item	Quantity	Unit	Workdays
1.Setting out			
1.1. Access road, drains, fence	1 800	m	
1.2. Pipeline	841	m	
Subtotal	2 641	m	
Skilled surveyor			2
Unskilled labour			7
2.Pipe laying	841	m	
2.1. Skilled labour			1
2.2. Unskilled labour			2
3.Access roads and drains using grader	1 800	m	9 machine hours
4.Fencing	1 800	m	
4.1. Skilled labour			2
4.2. Unskilled labour			7
5.Trenching	841	m	
Unskilled labour			285
6.Back-filling and compaction	798	m	
Unskilled labour			92

The following length of trenches by size will be required:

680 m	1 metre depth
228 m	0.75 metre depth
2 564 m	0.6 metre depth

The corresponding labour requirements will be as follows:

680 m ÷ 4	170
228 m ÷ 6	38
2 372 m ÷ 8	320.5
Total	528.5 workdays

On the average the backfilling labour requirements are half the trenching requirements. Therefore the back-filling labour requirements of the three examples are as follows.

Semi-portable for individual farms: (184/2)
92 work days

Semi-portable for smallholders: (504.5/2)
252 work days

Drag-hose for smallholders: (528.5/2) 264 work days

Tables 24 and 25 present the manual labour and machinery input for our examples of the semi-portable system for an individual, semi-portable for small holders and drag-hose for smallholder farmers.

3.3.4 Summary of bill of quantities

Tables 26 to 28 present the summary of bill of quantities for the semi-portable sprinkler irrigation system for an individual farm and the semi-portable and drag-hose sprinkler irrigation systems for smallholder farmers.

Table 25

Labour for setting out, pipe trenching, back-filling, fencing, road and drain construction for a semi-portable system and a drag-hose for smallholders

Item	Quantity		Unit	Workdays	
	Semi-portable	Drag-hose		Semi-portable	Drag-hose
1. Setting out					
1.1. Access road, drains, fence and pipeline	7 858	8 074	m		
Skilled surveyor				5	5
Unskilled labour				20	20
2. Pipe laying	3 220	3 436	m		
2.1. Skilled labour				3	3
2.2. Unskilled labour				6	7
3. Access roads and drains using grader	5 700	5 700	m	29 machine hours	29 machine hours
4. Fencing	1 800	1 800	m		
4.1. Skilled labour				2	2
4.2. Unskilled labour				7	7
5. Trenching	3 280	3 472	m		
Unskilled labour				504	528
6. Back-filling	3 280	3 472	m		
Unskilled labour				252	264

Table 26

Bill of quantities for a semi-portable system for an individual farm

Item	Quantity	Unit	Unit Cost	Total Cost
1. PVC PIPING				
1.1. PVC pipe, 200 mm class 6	438	m		
1.2. PVC pipe, 140 mm class 6	228	m		
1.3. PVC pipe, 90 mm class 6	60	m		
1.4. PVC pipe, 110 mm class 6	114	m		
1.5. PVC 90 degree bend, 200 mm	1	each		
1.6. PVC 45 degree bend, 200 mm	1	each		
2. PVC FITTINGS				
2.1. VTP tees, 200 mm x 3" x 200 mm	4	each		
2.2. DIV reducing bush, 200 mm x 140 mm	1	each		
2.3. VTP tees, 140 mm x 3" x 140 mm	4	each		
2.4. DIV reducing bush 140 mm x 110 mm	1	each		
2.5. VTP tees, 110 mm x 3" x 110 mm	3	each		
2.6. DIV reducing bush 110 x 90 mm	1	each		
2.7 VTP tee 90 mm x 3" x 90 mm	1	each		
2.8. CIV end cap 90 mm	1	each		
3. LATERALS AND SPRINKLERS				
3.1. Galvanized steel risers 75 mm x 1 m	11	each		
3.2. Valve hydrants 75 mm	11	each		
3.3. Aluminium valve control elbows 75 mm	6	each		
3.4. 168 lengths aluminium pipe with couplings 75 mm	1 008	m		
3.5. Aluminium riser assemblies ¾	75	each		
3.6. Galvanized steel risers 1 m x ¾	75	each		
3.7. 4.0 mm nozzle sprinklers @ 1.16 m^3/hr	75	each		
3.8. Stabilizing batten	75	each		
3.9. Aluminium portable tees 75 mm	3	each		
3.10. Aluminium reversible bends 75 mm	6	each		
3.11. Aluminium end plugs 75 mm	6	each		
3.12. Transport	-	lump		
4. TRENCHING AND BACK-FILLING				
Unskilled labour	276	workday		
5. SETTING OUT				
5.1. Skilled surveyor	2	workday		
5.2. Unskilled labour	7	workday		
6. PIPE LAYING				
6.1. Skilled labour	1	workday		
6.2. Unskilled labour	2	workday		
7. ACCESS ROADS AND DRAINS	9	mach.hr		
8. FENCING, 1 800 m				
8.1. Anchor	34	each		
8.2. Barbed wire, 4 lines	7 200	m		
8.3. Corner posts	4	each		
8.4. Gate, large 4.25 m	1	each		
8.5. Pignetting, 4ft, 3"	1 800	m		
8.6. Standard	120	each		
8.7. Straining post	2	each		
8.8. Tying wire	3	roll		
8.9. Transport	-	lump		
8.10. Skilled labour	2	workday		
8.11. Unskilled labour	7	workday		
9. PUMPING PLANT				
9.1. Pumphouse	1	lump		
9.2. Suction pipe, complete with screen, non-return valve	1	each		
9.3. Pressure gauge, flow meter, etc.	1	each		
9.4. Centrifugal pump (Q = 87 m^3/hr, H = 56.21 m, Eff. = 60%)	1	each		
9.5. 30 kW motor (Eff. = 88%)	1	each		
10. TOILET, STORAGE STRUCTURES, ETC.		lump		
SUB-TOTAL				
CONTINGENCIES 10%				
TOTAL				

Table 27

Bill of quantities for a semi-portable irrigation system for a smallholder scheme with one tertiary serving two plots

Item	Quantity	Unit	Unit Cost	Total Cost
1. PVC PIPING				
1.1. PVC pipe, 140 mm class 6	714	m		
1.2. PVC pipe, 90 mm class 6	84	m		
1.3. PVC pipe, 75 mm class 6	162	m		
1.4. PVC pipe, 63 mm class 6	240	m		
1.5. PVC pipe, 50 mm class 6	546	m		
1.6. PVC pipe, 40 mm class 6	1 692	m		
2. FITTINGS, LATERALS, SPRINKLER				
2.1. PVC 90 degree bend, 140 mm	1	each		
2.2. PVC 45 degree bend, 140 mm	1	each		
2.3. VTP tees, 140 mm x 3" x 140 mm	4	each		
2.4. CIV end cap 140 mm	1	each		
2.5. Brass gate valve 3"	4	each		
2.6. NIFV PVC barrel nipple 90 x 3"	4	each		
2.7 DIV reducing bush 90 mm x 63 mm	2	each		
2.8. VTP tees 63 mm x 2" x 63 mm	8	each		
2.9. CIV end cap 63 mm	2	each		
2.10. Brass gate valve 2"	16	each		
2.11. VTP tees 90 mm x 2" x 90 mm	4	each		
2.12. DIV reducing bush 90 mm x 75 mm	2	each		
2.13. VTP tees 75 mm x 2" x 75 mm	4	each		
2.14. CIV end cap 75 mm	2	each		
2.15. NIFV PVC barrel nipple 63 x 2"	16	each		
2.16. DIV reducing bush 63 mm x 50 mm	4	each		
2.17. DIV reducing bush 63 mm x 40 mm	12	each		
2.18. TIFV tees 50 mm x 1.5" x 50 mm	12	each		
2.19. GIFV elbows 50 mm x 1.5"	4	each		
2.20. Galvanized steel reducing bush 1.25" x 1.5"	48	each		
2.21. TIFV tees 40 mm x 1.25" x 40 mm	36	each		
2.22. GIFV elbows 40 mm x 1.25"	12	each		
2.23. Aluminium turf hydrant 1.5" x 25 mm	64	each		
2.24. Galvanized steel riser 1 m x 1.5"	64	each		
2.25. Galvanized steel socket 1.5"	64	each		
2.26. Aluminium elbows with stem and coupling 25 mm x 50 mm	64	each		
2.27. 224 lengths aluminium pipe 50 mm with coupling	1 536	m		
2.28. Aluminium reversible bend 50 mm	32	each		
2.29. Aluminium end plug 50 mm	32	each		
2.30. Aluminium riser assembly 0.5"	96	each		
2.31. Galvanized steel riser 2 x 1 x 0.5"	96	each		
2.32. Stabilizing batten	96	each		
3. SPRINKLERS 3.0 mm nozzle	96	each		
4. TRENCHING, BACK-FILLING				
Unskilled labour	756	workday		
5. SETTING OUT				
5.1. Skilled labour	5	workday		
5.2. Unskilled labour	20	workday		
6. PIPE LAYING				
6.1. Skilled labour	3	workday		
6.2. Unskilled labour	6	workday		
7. ACCESS ROADS AND DRAINS	29	mach.hr		
8. FENCING, 1 800 m				
8.1. Anchor	34	each		
8.2. Barbed wire, 4 lines	7 200	m		
8.3. Corner posts	4	each		
8.4. Gate, large 4.25 m	1	each		
8.5. Pignetting, 4ft, 3"	1 800	m		
8.6. Standard	120	each		
8.7. Straining post	2	each		
8.8. Tying wire	3	roll		
8.9. Transport	-	lump		
8.10. Skilled labour	2	workday		
8.11. Unskilled labour	7	workday		
9. PUMPING PLANT				
9.1. Pumphouse	1	lump		
9.2. Suction pipe, complete with screen, non-return valve	1	each		
9.3. Pressure gauge, flow meter, etc.	1	each		
9.5. Centrifugal pump (Q = 65.28 m^3/hr, H = 60.3 m, Eff. = 60%)	1	each		
9.5. 22 kW motor (Eff. = 88%)	1	each		
10. TOILET, STORAGE STRUCTURES, ETC.		lump		
SUB-TOTAL				
CONTINGENCIES 10%				
TOTAL				

Table 28

Bill of quantities for a drag-hose system for a smallholder scheme

Item		Quantity	Unit	Unit Cost	Total Cost
1. PVC PIPING					
1.1.	PVC pipe, 140 mm class 6	714	m		
1.2.	PVC pipe, 90 mm class 6	84	m		
1.3.	PVC pipe, 75 mm class 6	162	m		
1.4.	PVC pipe, 63 mm class 6	84	m		
1.5.	PVC pipe, 50 mm class 6	162	m		
1.6.	PVC pipe, 40 mm class 6	2 454	m		
2. FITTINGS, LATERALS, SPRINKLER					
2.1.	PVC 90 degree bend, 140 mm	1	each		
2.2.	PVC 45 degree bend, 140 mm	1	each		
2.3.	VTP tees, 140 mm x 3" x 140 mm	4	each		
2.4.	CIV end cap 140 mm	1	each		
2.5.	Brass gate valve 3"	4	each		
2.6.	NIFV PVC barrel nipple 90 x 3"	4	each		
2.7	DIV reducing bush 90 mm x 63 mm	2	each		
2.8.	VTP tees 63 mm x 2" x 63 mm	4	each		
2.9.	DIV reducing bush 63 mm x 50 mm	2	each		
2.10	VTP tees 50 mm x 2" x 50 mm	4	each		
2.11	CIV end cap 50 mm	2	each		
2.12.	Brass gate valve 2"	16			
2.13.	VTP tees 90 mm x 2" x 90 mm	4	each		
2.14.	DIV reducing bush 90 mm x 75 mm	2	each		
2.15.	VTP tees 75 mm x 2" x 75 mm	4	each		
2.16.	CIV end cap 75 mm	2	each		
2.17.	NIFV PVC barrel nipple 63 x 2"	16	each		
2.18.	DIV reducing bush 63 mm x 40 mm	16	each		
2.19.	Galvanized steel reducing bush 1.25" x 1.5"	192	each		
2.20.	TIFV tees 40 mm x 1.25" x 40 mm	176	each		
2.21.	GIFV elbows 40 mm x 1.25"	16	each		
2.22.	Galvanized steel riser 1 m x 1.5"	192	each		
2.23.	Galvanized steel elbow 0.5"	192	each		
2.24.	Brass garden tap 0.5"	192			
2.25.	Sprinkler, 3.0 mm nozzle on tripod and 2 m 0.5" riser	96	each		
2.26.	Hoses, 20 mm rated at 7 bar, 32 m each with hose clips	96	m		
2.27.	Galvanized elbow 0.5" x ¾	96	each		
2.28.	Hose adaptor, ¾	96	each		
3. TRENCHING, BACK-FILLING					
	Unskilled labour	792	workday		
4. SETTING OUT					
4.1.	Skilled labour	5	workday		
4.3.	Unskilled labour	20	workday		
5. PIPE LAYING					
5.1.	Skilled labour	3	workday		
5.2.	Unskilled labour	7	workday		
6. ACCESS ROADS AND DRAINS		29	mach.hr		
7. FENCING, 1 800 m					
7.1.	Anchor	34	each		
7.2.	Barbed wire, 4 lines	7 200	m		
7.3.	Corner posts	4	each		
7.4.	Gate, large 4.25 m	1	each		
7.5.	Pignetting, 4ft, 3"	1 800	m		
7.6.	Standard	120	each		
7.7.	Straining post	2	each		
7.8.	Tying wire	3	roll		
7.9.	Transport	-	lump		
7.10.	Skilled labour	2	workday		
7.11.	Unskilled labour	7	workday		
8. PUMPING PLANT					
8.1.	Pumphouse	1	lump		
8.3.	Suction pipe, complete with screen, non-return valve	1	each		
8.3.	Pressure gauge, flow meter, etc.	1	each		
8.4.	Centrifugal pump (Q = 65.28 m^3/hr, H = 62.1 m, Eff. = 60%)	1	each		
8.5.	30 kW motor (Eff. = 88%)	1	each		
8.6.	Skilled labour	-	lump		
8.7.	Unskilled labour	-	lump		
9. TOILET, STORAGE STRUCTURES, ETC.			**lump**		
	SUB-TOTAL				
	CONTINGENCIES 10%				
	TOTAL				

When ordering pipes, uPVC or AC, it is advisable to order 5% more than the required amount. This allowance is for breakages and wastage during pipe cutting for fitting connections. If after installation some pipes are left, these can be stored for use in cases of pipe breakages in future. The quantity of pipes inserted in the bill of quantities should give whole numbers of pipes when divided by the pipe length. For example, if from the design we need 162 metres of 110 mm class 6 uPVC, the bill of quantities will show a quantity of 174 metres of 110 mm class 6 uPVC ((162 x 1.05)/6 = 28.35 lengths, rounding up we get 29 lengths of pipes and this will be equivalent to 174 metres of the pipe). For other PVC items that are required in big quantities 1-2 extra pieces should also be provided. Other minor items are a few bags of cement and some coarse and fine aggregate for use during fencing and construction of thrust blocks, manholes and pump house. There is also a need to calculate the number of trips for a given size of transporter for the distance from the source of materials to site.

3.4. Operation of in-field irrigation infrastructure of semi-portable and drag-hose irrigation systems

This section gives general guidelines on the operation of hand-move sprinkler irrigation systems. The semi-portable and drag-hose sprinkler irrigation systems will be used as examples. The principle of operation of the hand-move systems is based on the movement of laterals from one position to the next after a predetermined irrigation event. Each irrigation event has a set time that depends on the amount of water required by the crop at that stage of growth.

For the semi-portable irrigation system, the lateral is coupled directly to the valve control elbow or to a header, which in turn is coupled directly to the valve control elbow. After irrigating in one position, the lateral is uncoupled and moved to the next position. Aluminium pipes should not be dragged along the ground as this would result in damage and besides that, soil would enter the pipes. Care should also be taken that when the pipes are moved in an area with electricity lines, there is no contact with the lines.

For drag-hose sprinkler systems, the hose is the lateral. The hose is connected to the garden tap or turf hydrant at one end (the hydrant in this case) and the riser on the other end. Hose clips and adapters are used to secure the hose. After irrigating one position, all sprinklers, risers and tripods are moved to the next position (position along hose length towards hydrant, see Figure 21). There is no need to disconnect any of the connections when changing position, neither is there any need to switch off the system. As a rule, the number of hoses and tripods with sprinklers is half the number of garden taps. Therefore, after completing the irrigation of half of the total area, hoses and sprinklers with their tripods are disconnected and moved to the other half of the area and connected to the corresponding garden taps. Of particular importance to this system is that farmers should clearly mark on the hose all positions of the sprinkler, so as to ensure that they place the sprinkler at the same position each time that position is irrigated and also to ensure that the overlap envisaged in the design is maintained.

3.5. Maintenance of the irrigation infrastructure

As a rule, the underground components of the system require no maintenance. However, at times, because of careless errors during cultural practices (for example tractor operators knocking down valve hydrants), pipes have to be replaced in order for the system to operate at the designated pressure.

Isolation valves, when unused for long periods, get stuck to the opening position and cannot be closed any more for the purpose of isolating the areas of breakages from other areas. This causes the whole system to be down, until repairs are made for minor breakages. It is therefore necessary that once a month all isolation valves are checked by opening and closing as well as lubricated.

The above ground components of the system, if carefully operated and maintained, are expected to last for about 15 years. This would require careful movement of aluminium pipes, after each riser and sprinkler have been disconnected from the pipe to facilitate ease of movement to the next position. Portable aluminium pipes are connected through couplings with rubber rings in order to ensure watertight connections. These rings have a life of about two years and need to be replaced accordingly.

The hoses used for sprinkler systems are rated at 7 metres pressure and are reinforced. Their life expectancy is about eight years. However, at times perforations or cuts occur during cultivation. In this case, line joiners can be used to repair the hoses. Another item that requires replacement is the rubber flap of the riser assembly (Figure 27b) which, depending on quality, can last about five years. The same holds true for the garden tap rubber or leather seal.

With respect to the sprinklers, it is necessary that all nozzles are replaced at least every two years (four seasons), in order to maintain the correct flow and distribution of water from the sprinkler. This is particularly important when surface water with high load of suspended solids is used for irrigation. The tension of the sprinkler spring and the wear of some of the plastic seals also require attention. It is therefore necessary that every four to five years the sprinklers are taken to the supplier for an overall check-up.

Chapter 4
Design of travelling irrigators

4.1. Introduction

Travelling irrigators or continuous-move irrigators are systems, which apply water while they are in motion. They include the cable drawn, also known as hose-drag irrigators, and hose reel, also known as hose-pull rain gun irrigators as well as the centre pivot systems. All systems were developed in the early 1970s, because of an increasing cost of labour. The hose-drag irrigator was developed in the USA while the hose-pull irrigator was developed in Europe, mainly for supplementary irrigation.

A travelling irrigator consists of the following major components: pumping unit, mainline, flexible hose, traveller unit and a gun sprinkler or a series of impact sprinklers or spray nozzles mounted on folding booms. This module describes the two types of hose-fed travel irrigators, namely the hose-drag and the hose-pull irrigator. Their principle of irrigation is the same. They differ in the mechanism with which the hose operates.

The traveller for hose-drag systems consists of an irrigator chassis on which a winch is mounted. The irrigator chassis also carries the irrigation equipment, such as the rain gun or boom sprinklers. The winch is driven by a piston and a ratchet mechanism, which is powered by water, bled off from the main supply to the irrigator itself. Water is supplied to the cable drawn irrigators from a hydrant on the mains via a lay flat hose. The lay-flat hose, laid in a loop at the start of irrigation, is dragged as the machine moves. Therefore, a loop carrier is normally provided in order to reduce crop damage. The cable has to be run out to the other end of the field where it is anchored. During irrigation, the irrigator winds itself across the field while

Figure 30
Hose-drag irrigator and field layout (Souce: Kay, 1986)

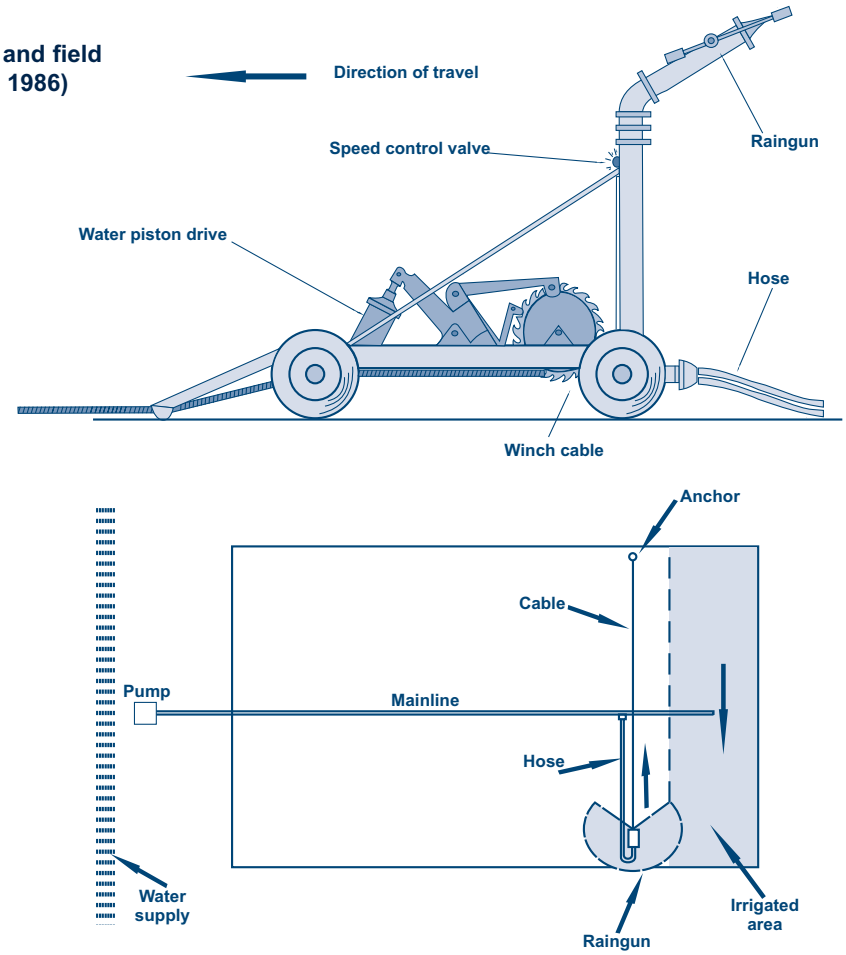

Figure 31
Hose-pull irrigator and field layout (Source: Kay, 1986)

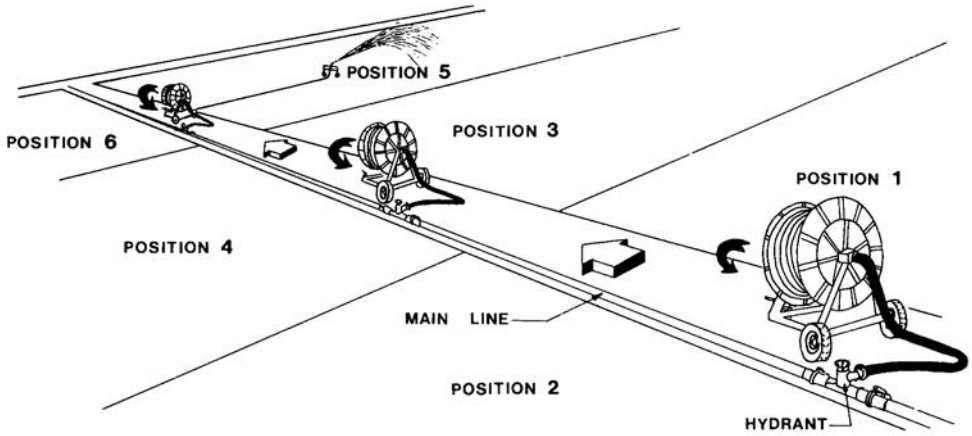

Figure 32
Farm map

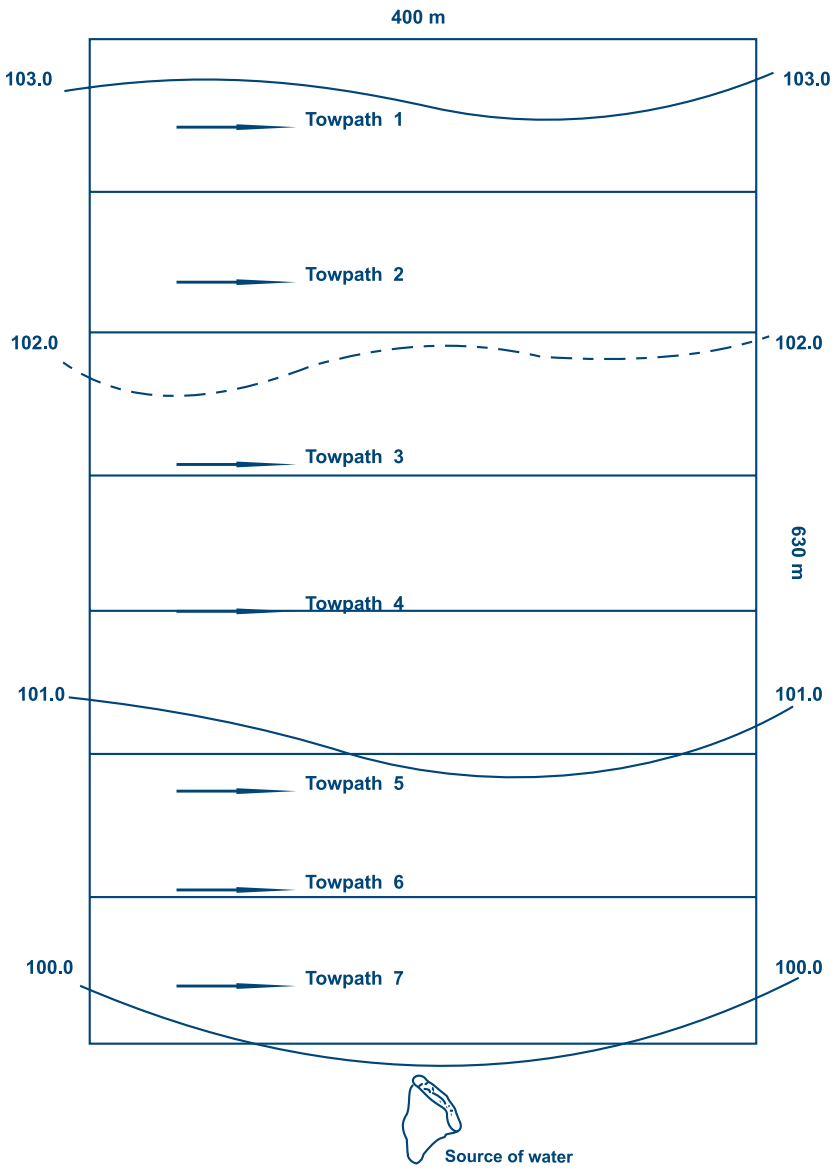

dragging the hose towards the place where the cable is anchored. The cable should be equal to the tow-path in length (shown as the irrigated area in Figure 30).

The traveller for the hose-pull consists of a rain gun mounted on a sledge (Figure 31). The gun is pulled by means of its own hose which is connected to a large drum (hose reel) on the other end of the field. The hose is pulled as it winds on the drum. The drum is mounted on a chassis, which will be parked at the headland, which is the water supply end. The chassis is fitted with a drive mechanism, which in the majority of cases is driven by waterpower from the main supply (turbine or piston or ratchet). Some of these travellers may have the reel on the sprinkler end of the hose. The hose reel should be strong and capable of accommodating the full length of the hose while it is full of water and under high pressure.

More recently, the folding boom equipped with spray nozzles has been gaining popularity in view of its low energy requirements. These systems, while maintaining the basic features of hose-reel guns, have substituted the gun with the boom and nozzles. They can operate with pressures as low as 25-35 metres at the mainline hydrant.

4.2. Preliminary design steps

The general sprinkler design principles such as depth of water application, optimum application rates, system capacity and others are also applicable to the design of the travelling sprinkler. The following sections will cover the principles that are unique to traveller design. These are the system layout, sprinkler and traveller selection, towpath spacing, the relationship between traveller speed and rate of water application and the frictional losses in the hose and traveller.

Applying the procedure described in earlier sections 2.1-2.2, the net depth of water application and irrigation frequency can be calculated as follows:

$$d_{net} = (FC\text{-}PWP) \times RZD \times P \text{ (mm)}$$

$$d_{gross} = \frac{d_{net} \text{ (mm)}}{E}$$

$$\text{Irrigation Frequency (IF)} = \frac{d_{net} \text{ (days)}}{wu}$$

The preliminary system capacity (Q) can be obtained using the equation:

Equation 11

$$Q = \frac{K \times A \times d}{f \times T}$$

Where:

Q = system capacity (l/s)

K = a conversion constant, 2.78

A = design area (ha)

d = gross depth of water application (mm)

f = irrigation frequency or operation time allowed for completion of 1 irrigation (days)

T = irrigation time (hours)

Example 8

Given:

- *A field measuring 630 m x 400 m or 25.2 ha (Figure 32)*
- *Average wind velocities: up to 3.5 km/hr*
- *Crop: maize*
- *Effective rooting depth: 0.75 m*
- *Soil: 1.5 m deep sandy loam*
- *Available water holding capacity (soil moisture): 115 mm/m*
- *Allowable depletion level: 50%*
- *Traveller irrigation efficiency: 70%*
- *Peak irrigation requirement: 5.5 mm/day*
- *General field slope: 0.5%*

What are the depths of water application, the irrigation frequency and the flow rate?

The net depth of application (d_{net}) = 115 x 0.5 x 0.75 m
= 43.1 mm

Assuming 70% efficiency (d_{gross}) = 43.1/0.7
= 61.6 mm

The irrigation frequency = 43.1/5.5
= 7.8 days say 8 days

Therefore, the irrigation interval (cycle) should be anything up to 8 days, which is the basis for the selection of the equipment.

Based on the peak irrigation requirement of 5.5 mm/day and an irrigation efficiency of 70%, the gross depth of water application (d_{gross}) per day is given by:

d_{gross} = 5.5 mm/day/0.7 = 7.86 mm/day

According to Keller and Bliesner (1990), during peak demands travel irrigators should ideally operate for at least 20 hours per day and at most 23 hours per day for systems requiring one shift per day. In this case 23 hours of operation was assumed.

Substituting the figures in the Equation 11 gives:

$$Q = \frac{2.78 \times 25.2 \times 7.86}{1 \times 23} = 24 \text{ l/s}$$

4.3. Adjustment and final design steps

As was done for periodic-move systems, once the preliminary design parameters are established, the final adjustment of the design can be done, starting with the sprinkler selection.

4.3.1. Sprinkler selection

The sprinkler characteristics that have to be considered as selection criteria are:

- jet trajectory
- operating pressure
- sprinkler body design

The sprinkler operating conditions to be considered in sprinkler selection are:

- soil infiltration characteristics
- desired irrigation depth
- desired or appropriate irrigation cycle
- crop characteristics
- wind conditions
- tow-path spacing

Jet trajectory

Most travellers use gun sprinklers with trajectory angles ranging between 18 and 32 degrees. High angles give maximum coverage only under low wind conditions and this minimizes droplet impact. For winds exceeding 16 km/hour, gun sprinklers with trajectory angles between 20 and 21 degrees should be used. Where winds are below 16 km/hr, sprinklers with trajectory angles from 26 to 28 degrees are better. Low angles generally result in large droplets which are not good for some crops, especially leaf crops such as tobacco.

Sprinkler nozzles

Generally gun sprinkler nozzles are fitted with either tapered or orifice nozzles. Jets produced by tapered nozzles have large drops and are less susceptible to wind than those produced by orifice nozzles. Since orifice nozzles produce smaller drops, they are used on more delicate crops, which are susceptible to large drop impact. However, the jets from orifice nozzles are also more susceptible to wind.

Sprinkler wetting patterns

Gun sprinklers can apply water to the full circle or part of the circle. The choice depends on considerations of uniformity of water distribution and the need sometimes to leave a dry area along which the traveller moves. In general, part circle coverage has a higher uniformity than full circle water application. This is due to the fact that for the same sprinkler discharge, the part circle sprinkler has a higher application rate at each point. As an example, half circle coverage doubles the full circle application rate, for the same sprinkler under similar conditions. Therefore, half the time would be required to apply the same depth as that applied by full circle coverage.

With these considerations in mind, a sprinkler can be chosen from Table 29 for the design discharge of 24 l/s. Similar tables can be obtained from manufacturers.

From Table 29, a gun sprinkler with a nozzle diameter of 30.5 mm and operating at 56.24 m head will discharge 24 l/s. This in fact is the required flow. The diameter of coverage of the sprinkler at that pressure is 120.4 m.

It is important to check whether the precipitation rate of the sprinkler, selected based on the required flow, is acceptable with regards to infiltration rates. The precipitation rate should not exceed the infiltration rate. Equation 12 is used to approximate the application rate of the sprinkler in order to compare it with the infiltration rate of the soil:

Table 29

Discharges and wetted diameters for gun sprinklers with 24 degree angles of trajectory and tapered nozzles operating when there is no wind (Adapted from: Keller and Bliesner, 1990)

Sprinkler Pressure	Diameter of Tapered Nozzle (mm)									
	20.3		25.4		30.5		35.6		40.6	
	Sprinkler Discharge and Wetted Diameter									
m	l/s	m	l/s	m	l/s	m	l/s	m	l/s	m
42.18	9.02	86.87	14.20	99.06	20.82	111.25	-	-	-	-
49.21	9.78	91.44	15.46	103.63	22.40	115.82	30.29	132.59	-	-
56.24	10.41	94.49	16.41	108.20	23.98	120.40	34.50	138.68	42.59	146.30
63.27	11.04	97.54	17.35	111.25	25.56	124.97	34.39	143.26	45.12	150.88
70.30	11.67	100.58	18.30	114.30	26.82	128.02	36.28	146.30	47.64	155.45
77.33	12.30	103.63	19.25	117.35	28.08	131.06	38.18	149.35	48.85	158.50
84.36	12.94	106.68	20.19	120.40	29.34	134.11	39.75	152.40	52.06	163.07

Equation 12

$$I = \frac{K \times Q_{sprinkler} \times 360}{\pi \times (0.9 \times R)^2 \times w}$$

Where:

I = approximate infiltration rate or approximate sprinkler application rate (mm/hr)

K = conversion constant, 3600

Q = sprinkler discharge (l/s)

π = 3.14

R = wetted radius of sprinkler (m)

w = portion of circle receiving water (degrees)

This equation assumes that 90% of the radius receives sufficient water.

Full Circle Operation

For full circle operation for the selected sprinkler:

$$I = \frac{3\,600 \times 24 \times 360}{3.14 \times (0.9 \times 60.2)^2 \times 360} = 9.37 \text{ mm/hr}$$

Part Circle Operation

If the sprinkler is operated as part circle, in which case it leaves a dry area for the traveller, say 75 degrees, the wetted part of the circle would be 285 (360-75) degrees.

$$I = \frac{3\,600 \times 24 \times 360}{3.14 \times (0.9 \times 60.2)^2 \times 285} = 11.8 \text{ mm/hr}$$

Having established the approximate application rate of the sprinkler one should check in Table 30 to see whether this application rate is compatible with the soil and topography. If not a different application rate and pressure combination or sprinkler would have to be selected. The sprinkler application rates in Table 30 should be reduced by 25% for traveller sprinklers in order to avoid the erosion of the soil, which could result from the relatively large water drop sizes. This table shows that the sandy loam soil can tolerate a maximum sprinkler application rate of 25 mm under periodic-systems. In order to avoid erosion under traveller irrigation systems the application rate should be reduced by 25% which gives approximately 19 mm/hr. Therefore, both the part circle and full circle sprinklers could be used.

Table 30

Suggested maximum sprinkler application rates for average soil, slope and tilth (Source: Keller and Bliesner, 1990)

Soil Texture and Profile	Slope			
	0-5%	5-8%	8-12%	12-16%
	Maximum Application Rate (mm/hr)			
Coarse sandy soil to 1.8 m depth	50	38	25	13
Coarse sandy soil over more compact soil	38	25	19	10
Light sandy loam to 1.8 depth	25	20	15	10
Light sandy loam over more compact soil	19	13	10	8
Silt loam to 1.8 m	13	10	8	5
Silt loam over more compact soil	8	6	4	2.5
Heavy textured soil or clay loam	4	2.5	2	1.5

If orifice nozzles are used, they would generally reduce the wetted radius by about 5%. This is because orifice nozzles discharge smaller drops, which result in a smaller radius of throw. The resultant application rates would be higher, calling for checking this application rate against Table 30.

In our example the wetted radius is 60.2 m (120.4/2). Therefore the wetted radius for orifice nozzle is 57.2 m (0.95 x 60.2 = 57.2). In that case the approximate application rate for, say a part circle, 35 mm diameter orifice nozzle operating at 56.24 m is, using Equation 12:

$$I = \frac{3\,600 \times 24 \times 360}{3.14 \times (0.9 \times 57.2)^2 \times 285} = 13.1 \text{ mm/hr}$$

This application rate is still acceptable since it is still below 19 mm/hr.

4.3.2. Tow-path spacing

Tow-path is the path along which an irrigator travels. As several paths would be required to cover the total area, the spacing between these paths should be established.

For traveller sprinkler irrigators, the uniformity of water application is affected by:

- wind velocity and direction
- jet trajectory
- nozzle type and wetted sector angle
- sprinkler sector profile and overlap achieve
- the variations in the sprinkler operating pressure and traveller speed

According to Collier and Rochester (1980), coefficient of uniformity (CU) values for travel irrigators only go up to 70-75% for wind speeds up to 16 km/hr and this is only in the central parts of the fields. It is therefore necessary to select a tow-path spacing which would provide the best possible spacing between any two tow-paths. Table 31 gives an example of recommended tow-path spacings for

Table 31

Typical recommended tow-path spacings for traveling gun sprinklers under various wind conditions, trajectory angles between 23 and 25 degrees (Source: Keller and Bliesner, 1990)

Sprinkle Wetted Diameter (m)	Wind Speed (km/hr)						
	Over 16		8-16		3.2-8		0-3.2
	Spacing as a Percentage of Wetted Diameter						
	50	55	60	65	70	75	75
	Tow-path Spacing (m)						
60.96	30.48	33.53	36.58	39.62	42.67	45.72	48.77
76.20	38.10	41.76	45.72	49.38	53.34	57.00	60.96
91.44	45.72	50.29	54.86	59.44	64.01	68.58	73.15
106.68	53.34	58.52	64.01	69.19	74.68	79.86	85.34
121.92	60.96	67.06	73.15	79.25	85.34	91.44	97.54
137.16	68.58	75.59	82.30	89.00	96.01	103.02	109.73
152.40	76.20	83.82	91.44	99.06	106.68	114.30	121.92
167.64	83.82	90.05	100.58	109.12	117.35	125.58	134.11
188.88	91.44	100.58	109.73	118.87	128.02	-	-

travellers with gun sprinklers whose angles of trajectory are between 23 degrees and 25 degrees. Where wind speeds exceed 16 km/hr sprinklers with lower trajectory angles, typically 20 to 21 degrees should be used and where winds are negligible 26 to 28 degree trajectories should be used, as explained in Section 4.3.1.

In our example, the selected 30.5 mm diameter nozzle discharges 24l/s at a pressure of 56.24 m and has a wetted diameter of 120.4 m. From Table 31 the nearest wetted diameter to 120.4 m is 121.92 m. Since the wind speed is 3.5 km/hr, it falls within the range 3.2-8 km/hr. Two options are available within this wind speed range and a choice of spacing between 70 and 75% of the wetted diameter should be made. Since the wind speed of the case under consideration is closer to the low end of the wind speed range, the higher percentage is adopted. It should be pointed out that the higher the wind speed, the more the overlap required and thus the lower percentage of wetted diameter is used. Hence the nearest estimated tow spacing as a function of the wetted diameter is 91.44 m. In our example, the wetted diameter is 120.4 m. According to the table, the tow spacing should be 75% of the wetted diameter, that is 90.3 m (0.75 x 120.4). This is near enough to the recommended 91.44 m. A good round figure to use for the tow-path spacing is 90 m.

For uniformity of application purposes, it is desirable that the general direction of the tow-path follows the contour lines. The field length is 630 m. Therefore the number of tow-paths is obtained by dividing the length of the field by the width of the tow-path spacing. In our example this is 7 (630/90). Therefore in order to cover 630 m, 7 tow-paths are necessary for the traveller to complete the irrigation of the full 25.2 ha (Figure 32).

4.3.3. Travel speed

Generally travellers are designed and set up to travel one tow-path length in about 23 hours for a single shift per day or 11 hours for 2 shifts per day. For 2 shifts, 1 hour is provided for between the shifts in order to allow for the change to the next tow-path.

The original assumption was that the whole area would be irrigated in 1 single day which is not the case. In our example, it was assumed during the calculation of the allowable minimum system capacity (Section 4.2.2) that the set time would be 23 hours and section 4.3.2 showed that the number of tow-paths necesssary to cover 630 m width of field was 7. Therefore effectively it takes 7 days to irrigate 25.2 ha, that is, the irrigation cycle is 7 days.

At this point, it is necessary to check whether the irrigation cycle arrived at is acceptable when compared to the irrigation frequency obtained in Section 4.2.1. The frequency obtained was 7.8 days assuming 50% allowable soil moisture depletion.

If an irrigation cycle of 7 days and an irrigation frequency of 8 days is adopted then the traveller has to irrigate continuously during the peak water requirement period for 7 days with one day off. This would allow for repairs and maintenance as well as cultural practices. In that case, the moisture depletion at which irrigation occurs is obtained as follows:

Gross irrigation depth (d_{gross})

= 8 days x 7.86 mm/day = 62.9 mm per irrigation.

The moisture depletion at the time of irrigation is:

= {(8 x 5.5)/(115 x 0.75)} x 100%

= 51%.

The average gross application depth (d_{gross}) is given by equation 13:

Equation 13.

$$d_{gross} = \frac{k \times Q}{v \times W}$$

Where:

d_{gross} = gross depth of water application (mm)
k = conversion constant, 60
Q = sprinkler discharge (l/s)
v = travel speed (m/min)
W = tow-path spacing (m)

Therefore to compute v the equation is re-arranged to:

$$v = \frac{k \times Q}{d_{gross} \times W}$$

Substituting the values gives:

$$v = \frac{60 \times 24}{62.9 \times 90} = 0.254 \text{ m/min}$$

Therefore the time required to traverse 400 m length of tow-path is given by:

$$\frac{400}{0.254 \times 60} = 26.62 \text{ hours}$$

This would require certain changes to the design, so that we do not exceed 23 hours of operation per day at peak demand. Several options are available:

1. The length of path is reduced so that it is covered within 23 hours. This would imply that the path length is reduced to 350 m (0.254 x 60 x 23) and a strip of land of 50 x 630 m^2 or 3.15 ha would not be irrigated
2. The irrigation cycle and frequency are 7 days, resulting in irrigating the whole area within 7 days and taking the risk of non-availability of time for repairs and maintenance during the peak demand
3. Assuming a larger diameter of nozzle is selected (35.6 mm), let us go through the same process to investigate if less than 3.15 ha of land remains without irrigation. Combine this with an irrigation cycle of 6 days and frequency of 7 days

d_{net} = 7 x 5.5 = 38.5 mm and
d_{gross} = 38.5/0.7 = 55 mm
Depletion = {(7 x 5.5) / (115 x 0.75)} x 100% = 45%

The sprinkler flow rate Q = 34.5 l/s and the wetted diameter is 138.68 m (Table 29). The approximate application rate:

$$I = \frac{3\,600 \times 34.5 \times 360}{3.14 \times (0.9 \times 69.34)^2 \times 285} = 12.8 \text{ mm/hr}$$

This is less than 19 mm/hr and thus acceptable. The next step is to establish the tow-path spacing from Table 31, which is 103.02 m. In our example, the wetted diameter is 138.68 m, which would give a tow-path spacing of 104 m (0.75 x 138.68). This is close enough to the recommended 103.02 m. Hence, with 6 tow-paths (one per day) a strip of land of 0.24 ha ({630 - (6 x 104)} x 400) can be excluded from irrigation, if conformity to speed is obtained.

$$\text{Conformity speed, } v = \frac{60 \times 34.5}{55.x\ 104} = 0.362 \text{ m/min}$$

Therefore, the time required to traverse 400 m of length of tow-path is 400/(0.362 x 60)= 18.4 hours. Other options are available through the selection of smaller sprinklers or the same operating at lower pressure. The final choice is up to the farmer as to whether he/she would accept to take the risks and limitations of the one or other option.

4.3.4. Standing positions, times and hose length

Standing time is the time during which a sprinkler operates while it is stationary. When using travelling irrigators, only the central positions of the field receive adequate irrigation. A portion equal to the wetted radius of the sprinkler, on each end of the field, receives inadequate irrigation. This will always be the case, but can be minimized by allowing for standing time at each end of the tow-path, so that those areas can receive more water than would otherwise be the case. It should be kept in mind however, that in this case the opposite to the edge area will receive more than the needed amount of water.

The standing positions and time depend on:

- whether the traveller moves from end to end
- whether the traveller moves from end to centre
- the wetted sector angle
- whether the irrigated areas are isolated or adjacent to each other

Generally, hose-drag travellers are operated for the full length of the tow-path in one direction. On the other hand, hose-pull travellers are usually operated from one end to the centre.

By establishing the standing positions and times of the traveller, the actual length of hose can be determined. After that the inlet pressure required by the hose can be established.

Standing positions

It is generally recommended that the ideal starting (initial) distance (SD) from the field edge should be 2/3R, where R is the radius of the wetted circle:

Equation 14

$$SD = \frac{2R}{3}$$

The final distance, (FD) from the other field boundary is:

Equation 15

$$FD = \frac{2}{3} \times \left[1 - \left(\frac{360 - w}{180}\right)\right] \times R$$

Where:

SD = initial starting point distance from the field edge (m)

FD = Final or stopping point distance to the end of the tow-path for end-to-end operation (m)

w = portion of circle receiving water (degrees)

R = wetted radius of sprinkler (m)

Assuming the farmer chooses option 3, the distance from the field boundary, to the starting standing position is:

$$SD = \frac{2 \times 69.34}{3} = 46.2 \text{ m}$$

If the sprinkler has a full circle coverage, then SD=FD. However if it is a part circle with say a 285 degree coverage, then the distance from the final standing position to the other field edge is:

$$FD = \frac{2}{3} \times \left\langle \frac{1 - 360 - 285}{180} \right\rangle \times 69.34 = 27.0 \text{ m}$$

Having established the standing positions in terms of their distances to the 2 field edges, the standing time can now be calculated. The total standing time is equal to the time which the traveller should have taken to travel the rest of the distance had it not stopped. The general equation for standing time is:

Equation 16

$$t = \frac{2}{3} \times \frac{R}{V}$$

Full circle coverage standing time

For full circle coverage, the starting standing time (St) is equal to the final standing time (Ft) that is:

Equation 17

$$St = Ft = \frac{SD}{V} = \frac{2}{3} \times \frac{R}{V}$$

This gives the total standing time at each field edge as:

$$St = Ft = \frac{46.2}{0.362} = \frac{2}{3} \times \frac{69.34}{0.362} = 127.6 \text{ minutes}$$

or 2.13 hours for each field end. This means that the traveller irrigates while in motion for a distance of 307.6 m {400-(46.2 x 2)} Since the traveller speed is 0.362 m/min, the traveller irrigates while in motion for 14.16 hours. The total irrigation time is 18.42 hours (14.16 + 2.13 + 2.13).

Part circle coverage standing time

For part circle coverage, the individual standing times are equal to 127.6 minutes {46.2 m/(0.362 m/min.)} on one end and 74.6 minutes (27.0 m/(0.362 m/min.)} on the other. The average of these standing times is 101.1 minutes. The average standing time for part circle sprinklers can also be calculated using Equation 18 as follows:

Equation 18

$$St = Ft = \frac{(SD + FD)}{2 \times V} = \frac{2}{3} \times \frac{R \times W}{360 \times V}$$

This gives for a 285 degree part circle coverage:

$$St = Ft = \frac{(46.2 + 27.0)}{2 \times 0.362} = \frac{2}{3} \times \frac{69.34 \times 285}{360 \times 0.362} = 101.1 \text{ minutes}$$

In practice the two standing times are just averaged as assumed in the equation above.

Hose length determination

Having calculated the standing positions and times, the length of the hose can now be determined. The original assumption was that the hose should be as long as the distance from one end of the field to another, along the tow-path length of 400 m. However, it can be reduced by a minimum length corresponding to FD or in practice, by a maximum length corresponding to the average of SD and FD. In the case of the part circle coverage, the latter would be: ½(46.2 + 27.0) = 36.6 m, say 36 m. Therefore the actual length of the hose would be 364 m (400 - 36).

Head loss in the hose

Table 32 provides typical frictional loss gradients for the normal flow ranges of lay flat hoses operating at about 70 m head. This will be used as an example for frictional loss

Table 32

Estimated friction loss gradient values in m per 100 m, for lay-flat irrigation hose operating at approximately 70.3 m pressure rating (Source: Keller and Bliesner, 1990)

Flow rate (l/s)	Nominal lay flat hose diameter (mm)				
	63.5	76	102	114	125
6.3	3.7				
9.5	7.9	3.2			
12.6	12.9	5.5			
15.8		8.3	2.2		
18.9			3.1	1.4	
25.2			5.3	2.9	
31.5			8.1	4.8	2.5
37.9			11.3	6.1	3.7
44.2				8.2	4.9
50.5				10.5	6.2
56.8					7.9
63.1					9.2

calculations. Manufactures' charts should be sourced when such calculations have to be done for different operating heads and hoses. Alternatively the general equation for computing friction losses in smooth plastic pipes and hoses, shown below, should be used.

Table 32 is initially used to estimate the friction losses for the lay flat pipes. Lay pipes collapse when they are drained. They are used with hose-drag travellers. Lay flat pipes tend to increase in diameter during operation and therefore can in fact take a higher discharge. Therefore there is a need to establish the diameter during operation. Once the inside diameter is determined, the equations for computing frictional loss gradients can be used to estimate more accurately the friction losses during operation. It has been established that the inside diameter of a lay-flat hose increases by about 10% under normal operating pressures thereby allowing the hose to be capable of delivering 20% more discharge than the same diameter rigid plastic hoses used in hose pull systems. The thick-walled plastic hoses used for hose-pull traveller have known inside diameters which can be used in the same equations for computational purposes. Their diameters do not change as a result of water pressure.

Having established that the length of the hose is 364 m, the friction loss through it can now be determined. From Table 32, the flow rate to 34.5 l/s is between 31.5 and 37.9 l/s, with Hf values of 4.8 and 6.1 m per 100 m for a 114 mm diameter pipe. By interpolation, we derive a Hf of 5.4 m per 100 m for the 34.5 l/s flow when using 114 mm lay flat hose. Therefore the total head loss is 19.66 m (5.4 x 364/100). Since the sprinkler operating pressure is 56.24 m and the total head loss of the hose is 19.66 m, the total operating pressure at the beginning of the hose will be 75.90 m, which exceeds 70.3 m pressure rating of the hose. Therefore, a bigger size hose will be selected, so that the total head loss is reduced to within 70.3 m. The next size up is 125 mm in diameter. By interpolation, the Hf is 3.06 m per 100 m. Therefore the total head loss is 11.1 m (3.06 x 364/100). This gives a total operating pressure of 67.34 m (11.1 + 56.24). This suggests that we may be confronted with the same situation of exceeding the pressure rating of the lay flat hose, especially if we add the head losses in the riser. Under these circumstances, it is advisable to have the main line dissecting the plot in two, thus reducing substantially the head losses in the hose and possibly allowing the use of smaller diameter hoses.

In order to establish the length of the short hose, it is necessary to go back to the calculation of standing time. In this case it is only at the edges of the field. As mentioned earlier, the distance from the field boundary is 46.2 m. Therefore the length of the hose will be 153.8 m (200-46.2). This will reduce the head losses to 4.7 m (3.06 x 153.8/100).

In selecting the pipe diameter, consideration should also be given to the cost and expected useful life of the hose as provided by the manufacturer, and whether the size of the traveller can drag the hose. This information is also provided by the manufacturer.

The general equation for calculating frictional losses in smooth plastic pipes and hoses is Equation 10 (see section 3.2.3), which is:

$$Hf_{100} = \frac{K \times \left\langle \frac{Q}{C} \right\rangle^{1.832}}{D^{4.87}}$$

Where:

Hf_{100} = friction losses (in metres) over a 100 m distance (m/100m)

K = constant 1.22×10^{12}, for metric units

Q = discharge in l/s

C = coefficient of retardation based on type of pipe materials (C = 140 for plastic)

D = inside diameter (mm)

Using the equation for a flow of 34.5 l/s and a 125 mm diameter hose gives:

$$Hf_{100} = \frac{1.22 \times 10^{12} \times \left\langle \frac{345}{140} \right\rangle^{1.852}}{125^{4.832}} = 6.72$$

Therefore the head losses in the 364 m hose length are 24.46 m (6.72 x 364/100). This again suggests the use of shorter length of hoses.

4.3.5. Selection of the traveller

Normally turbine drive travellers are used. The traveller will have frictional losses within it as well as the required drive turbine pressure at a given discharge. Manufacturers' charts have to be used to select the traveller total head loss.

4.4. Total dynamic head requirements

4.4.1. Pressure requirements at mainline valve hydrant

The pressure requirements at the inlet of the system consist of the sprinkler operating pressure, friction losses in the hose, traveller head losses, head losses through the shut off valve and the height of the riser. If the pressure loss through the shut-off valve is assumed to be 2 m and the height of the gun riser is 2.5 m from the ground, then the inlet pressure would be calculated as shown in Table 33 below:

Table 33
Hose inlet pressure requirements

Type	Head Loss (m)
Sprinkler operating pressure	56.24
Friction loss in hose	4.7
Head loss in traveller (assumed)	4.7
Head loss in automatic valve	2.0
Riser height	2.5
Required pressure at inlet	**70.14**

4.4.2. Head loss in mainline

The length of the water supply line from the river to the last hydrant is 588 m (630 - 52 +10), as the edge of the field is 10 m away from the pumping station and the furthest hydrant is one half of the tow-path width 52 m (1/2 x 104) away from the field edge. Using Figure 8, a 160 mm diameter PVC pipe, class 10 could be chosen to carry the design flow of 34.5 l/s (124.2 m^3/hr). The pressure loss would be 1.6 m per 100 m. Therefore the total friction loss over the whole length of the supply line would be 5.88 x 1.6 m that is 9.4 m. This is within the 20% allowable pressure variability. The mainline does not necessarily have to be buried. It can also be portable.

4.4.3. Total dynamic head

The elevation difference from the source of water to the highest point is approximately 3 metres (Figure 32). Therefore the total dynamic head is 92.69 as shown in Table 34 below. The final design layout is shown in Figure 33.

Table 34
Total dynamic head requirements

Type	Head Loss (m)
Sprinkler operating pressure	56.24
Friction loss in hose	4.7
Head loss in traveller	4.7
Head loss in automatic valve	2.0
Riser height	2.5
Friction loss in mainline	9.4
Suction head	2.0
Total Head	81.54
10% for fittings	8.15
Elevation difference	3.0
Total dynamic head requirements	**92.69**

In comparison to the gun, if a boom with spray nozzles is used, the total head requirements can be reduced by 35 metres, since the total head requirements (friction losses in hose + traveller + nozzle operating pressure) of these systems do not exceed 30 metres. However, since the boom systems are smaller, a number of them operating at the same time would be required to cover the whole area.

4.5. Power requirements

Through the application of Equations 8 and 9 presented, the power requirements are calculated as shown below:

$$\text{Power requirements} = \frac{34.5 \times 3.6 \times 92.69}{360 \times 0.6} = 53.3 \text{ kW}$$

$$\text{or } \frac{34.5 \times 3.6 \times 92.69}{273 \times 0.6} = 70.3 \text{ HP}$$

If 20% is added for derating purposes, the prime mover would have to be 64.0 kW or 84.4HP.

4.6. System components

Generally the major components of travelling irrigators are the irrigating unit, the supply pipe and a propelling mechanism (turbine pump). The example of a cable-drawn irrigator will be used to illustrate the major components in more detail.

4.6.1. The irrigation machine

The irrigation machine (Figure 34) consists of:

- a trailer
- the pipe supplying water to the gun
- a winch and a hydraulic piston motor

The trailer is mounted on 4 wheels. The front wheels are able to turn and they form one piece with the towbar. The

Figure 33
Final system layout for traveller irrigation design (field: 630 m x 400 m)

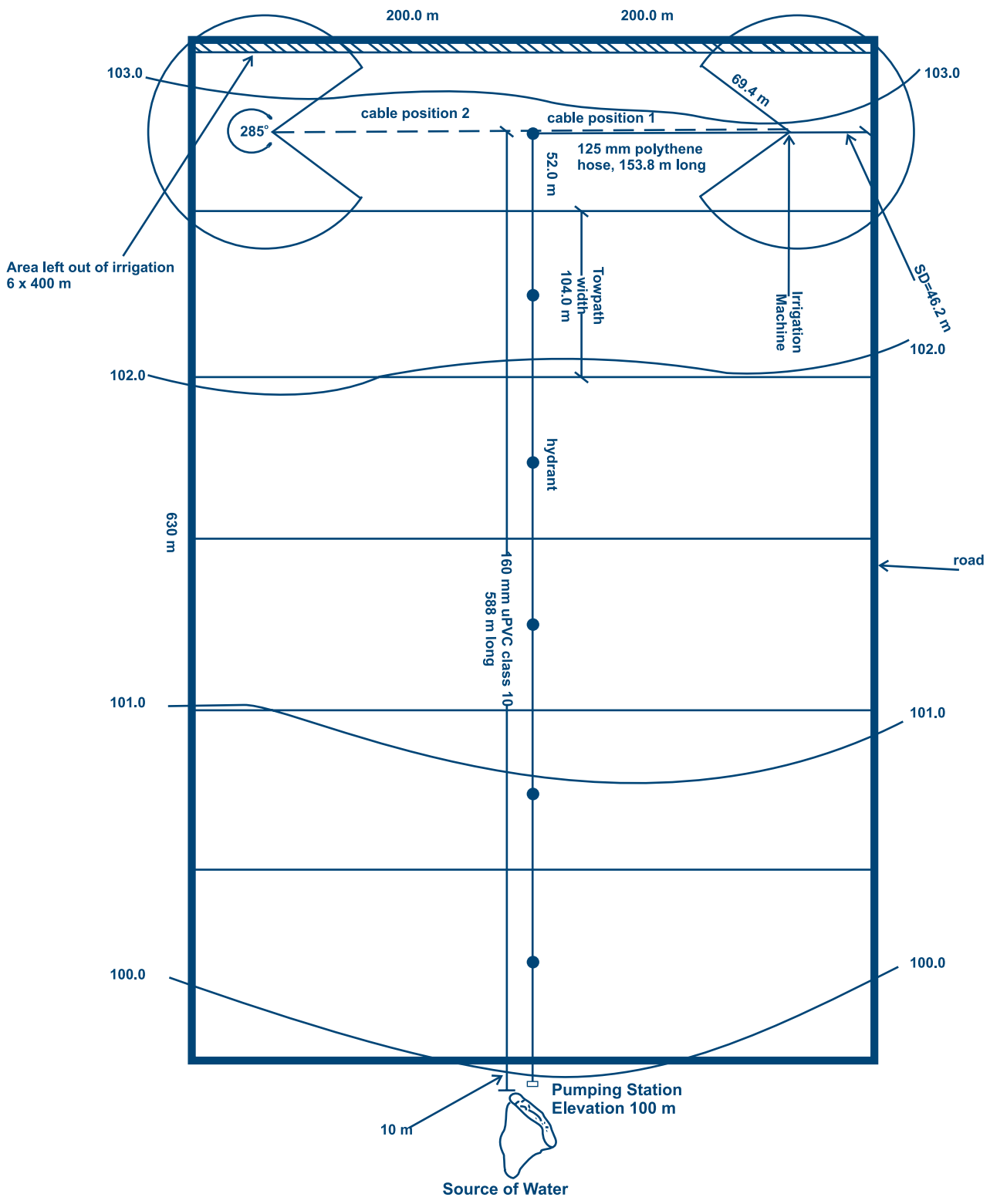

Figure 34
Self-hauled cable-drawn irrigation machine (Source: FAO, 1982)

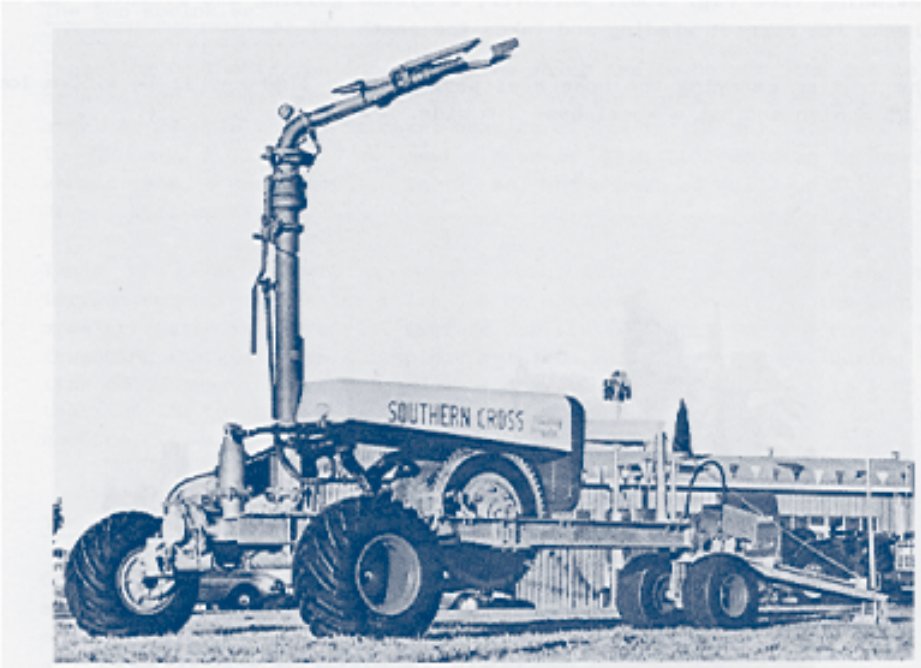

supply pipe has a hose coupler on one end and a gun on the other. The hydraulic motor is responsible for rotating the winch, Figure 35. The machine also carries the mechanism for stopping movement and irrigation once the machine reaches the other end.

4.6.2. The hose reel trailer

The frame of the trailer is mounted on 2 wheels and carries the hose reel. The large horizontally mounted reel has a small cable-winding reel also mounted on top of it. The system also carries an air compressor and a mechanism for guiding and cleaning the hose as it winds.

4.6.3 The Hose

The hose is made in such a way as to be extremely wear resistant against the strain of traction and the high pressure it is subjected to. It is usually made of canvas-reinforced rubber. It has to be flexible.

4.6.4. The gun sprinkler

The recommendations on the selection of gun sprinklers have already been made in Section 4.1. Figure 36 shows a typical gun sprinkler.

Figure 35
Hydraulic motor and winch for self-hauled cable-drawn irrigation machine (Source: FAO, 1982)

Figure 36
Typical gun sprinkler mounted on skids or wheels (Source: FAO, 1982)

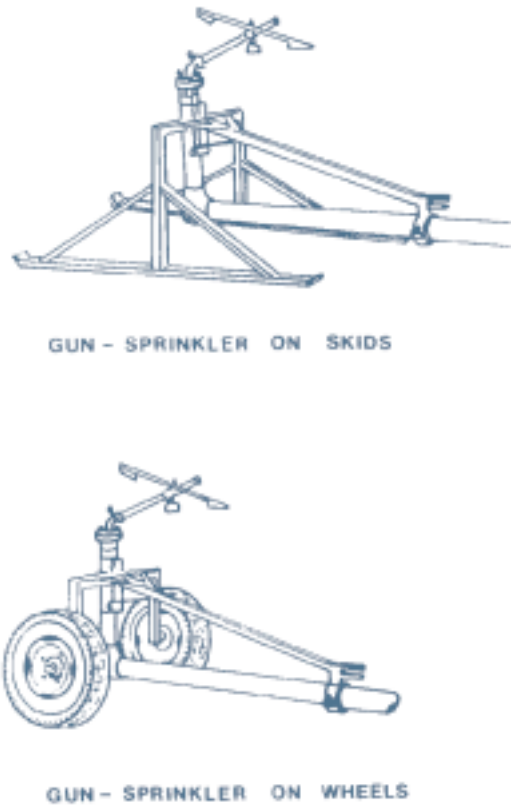

4.7. Bill of quantities

The source of water is 588 m away from the furthest hydrant. A 160 mm diameter, class 10 PVC pipe will be buried and it feeds the 6 hydrants along the mainline. The trench for the pipeline will be 1.00 m deep and 0.6 m wide. Manual labour will be used both for excavation and back-filling of the trenches. One access road will be constructed around the 400 m x 630 m field and outer drain will be provided. No new fencing is required since the farm is fenced already. The field toilets are already in place. It has also been assumed that other equipment such as tractors is already available for other farm uses.

The procedure for calculating labour requirements outlined in sections 3.3.3 and 3.3.4 is followed:

- setting out 588 m of pipeline and 2060 m of access road with drains, would require (2 648/1 600) 1.7 (say 2) workdays for the surveyor and (4 x 1.7) 6.8 (say 7) workdays for unskilled labour
- construction of 2060 m of road with drains would require approximately 10 (2060/200) machine hours
- excavation of a 1 metre deep trench 588m in length would require 147 (588/4) workdays for unskilled labour
- pipe laying would require 0.5 (588/1 000) workdays for skilled and (0.5 x 2) 1 workday for unskilled labour.

Following the same procedure outlined in the earlier sections, the bill of quantities for the system would be calculated and presented as shown in Table 35.

4.8. System operation

There are several ways to operate the different types of travelling irrigation machines. The cable drawn travelling irrigator will be used as an example to illustrate the way travellers are operated. This system has got a trailer carrying the gun sprinkler. The trailer is also equipped with a water powered winch and a cable. The winch is driven by water pressure from the pumping unit. The gun sprinkler is supplied water from the pump, via a mainline, which has hydrants onto which the hose is connected. Figure 32 showed the irrigation layout.

The following procedure is typical for the way such a system is operated, step by step:

1. The tractor, hose reel and irrigating unit are harnessed in that order along the tow-path
2. The cable is anchored at one end of the field

Table 35
Bill of quantities for hose-drag traveller irrigation system for 25.2 ha

	Item	Quantity	Unit	Unit Cost	Total Cost
1.	PVC pipe, 160 mm class 10	588	m		
2.	VTP tees, 160 mm x 5" x 160 mm	6	each		
3.	90 degree bend, 160 mm	1	each		
4.	Reducers, 160 x 5"	6	each		
5.	Risers 1 m	6	each		
6.	Valve hydrants 5"	6	each		
7.	Valve control elbows, 5"	6	each		
8.	Hose adapter	6	each		
9.	Irrigation machine, complete with gun sprinkler supply pipe 2.5 m high, winch, automatic shut-off valve and hydraulic piston motor, hose adapter	1	each		
10.	Hose reel trailer, complete with hose winding reel, cable winding reel and air compressor	1	each		
11.	Flexible hose, 125 mm diameter	154	m		
12.	Centrifugal pump, 38 kW (50BHP) (Q = 34.5 l/s, h = 56.24 m, Eff. = 60%)	1	each		
13.	Electric motor, 45.5 kW (60BHP) (Eff. = 82%) + accessories	1	each		
14.	Transport of materials (y ton for x distance)	1	each		
15.	PIPE TRENCHING, BACK-FILLING				
	15.1. Manual labour trenching	147	workday		
	15.2. Unskilled labour, back-filling	74	workday		
16.	SETTING OUT 588m pipeline, 2060m road with drains				
	16.1. Skilled surveyor	2	workday		
	16.3. Unskilled labour	7	workday		
17.	PIPE LAYING, 588 m				
	17.1. Skilled labour	1	workday		
	17.2. Unskilled labour	1	workday		
18.	ACCESS ROADS, 2060 m	10	mach.hr		
19.	PUMPING PLANT				
	19.1. Pumphouse	1	lump		
	19.2. Suction pipe, complete with screen, non-return valve	1	each		
	19.3. Pressure gauge, flow meter, etc.	1	each		
	19.4. Centrifugal pump (Q = 34.5 l/s, h = 92.69 m, Eff. = 60%)	1	each		
	19.5. 55 kW motor (Eff. = 88%)	1	each		
	SUB-TOTAL				
	CONTINGENCIES 10%				
	TOTAL				

3. The tractor is driven to the hydrant
4. The hose is then connected to the hydrant
5. Unwinding of the cable and hose are then done by driving the tractor to the other end of the field
6. The next step is to disconnect the hose
7. The hose reel and the irrigating unit are then brought back to the first position
8. The hose is attached to the irrigating unit and the unit is also detached from the hose reel
9. The hose reel trailer is then driven to the position where the cable is anchored
10. The pumping station should then be started

The irrigating unit will then start to operate. As it irrigates, it winds the cable on the winch and in the process pulls itself on the cable. Once it reaches the pre-determined distance close to the other end, it automatically stops moving and irrigating. If standing time is allowed for, it stops moving but continues to irrigate during the standing time. The following procedure should be followed when changing position to the next tow-path.

1. The hose is disconnected from the hydrant as well as from the irrigating unit
2. The hose is then connected to the hose reel
3. The tractor should be connected to the hose reel before draining the hose by air pressure from an air compressor
4. The hose is then rewound and the equipment is moved to the next tow-path

4.9. Maintenance of travelling irrigators

The maintenance of pipelines and pumping equipment of a traveller irrigation system is similar to that of the other sprinkler systems. Module 5 describes how pumping equipment should be maintained and suggests some common problems of pumps and how to solve them. The maintenance of the traveller irrigator requires skilled expertise, which should be provided by the dealer. There are a number of protection devices, which can be incorporated in the traveller system in order to improve the operation of the system.

Travellers irrigate for long periods unattended. Therefore there is a need to install system protection devices within the system for the shut down of the traveller system in the event of a malfunction. Similarly, the main pump supplying the irrigator should have pressure detectors in the main supply line so that when blockages or bursts occur the whole system can be turned off. Cable drawn (hose-drag) and hose reel (hose-pull) irrigators have an automatic pressure switch-off facility, which turns off the winding mechanism at the end of the run. It is not usual to cut off the main supply at the same time. However, as this can lead to excessive pressure build-up in the main, a cut-off mechanism can be provided for the motor of the pumping plant so that when the traveller cuts off, the motor can also turn off at the same time.

The irrigation machines should be moved in such a way as to avoid contact with power lines. Generally the machines should move parallel to power lines to minimize the contact of power lines and water. There has to be a minimum of 15 metres between the nozzle and power line to allow the water to break up into droplets before hitting power lines.

References

Addink, *et al*., 1989. *Design and operation of farm irrigation systems.* ASAE.

Alumin Industries. 1982. *Aluminium Pipe Catalogue.*

ASAE. 1988. *Standards*. 33rd edition.

Collier, R.L. and Rochester, E.W. 1980. *Water Application Uniformity of Hose Towed Traveller Irrigators.* ASAE Transactions. 19(2): 254-258.

FAO. 1982. *Mechanized Sprinkler Irrigation*. FAO Irrigation and Drainage Paper 35, 409 p.

FAO. 1998. *Crop Evapotranspiration.* FAO Irrigation and Drainage Paper 300 p.

Farm Electric Handbook. *Pumping and Irrigation: A guide to the design of simple pumping systems.* Warwichshire. 61p.

Isrealson and Hansen. 1967. *Irrigation Principles and Practices.*

Kay, M. 1986. *Sprinkler Irrigation: Systems and Practice.* Bedford. 141 p.

Keller, J. and Bliesner, R.D. 1990. *Sprinkler and Trickle Irrigation.* Chapman and Hall, New York

Keller, J. 1989. *Sprinkler and Trickle Irrigation.* Utah State University. Utah.

South African Bureau of Standards. 1976. *Standard Specifications for Components of Unplasticized Polyvinyl Chloride (uPVC) Pressure for Potable Water. Revision 1.* Pretoria.

The Irrigation Association. 1983. *Irrigation*. 5th edition.

Withers and Vipond. 1974. *Irrigation Designs and Practices.*