Irrigation Manual

Planning, Development, Monitoring and Evaluation of Irrigated Agriculture with Farmer Participation

Module 2

Natural Resources Assessment

Developed by

Andreas P. SAVVA

and

Karen FRENKEN

Water Resources Development and Management Officers
FAO Sub-Regional Office for East and Southern Africa

In collaboration with

Samuel SUNGURO, Hydrologist Consultant
Lee TIRIVAMWE, National Irrigation Engineer, Zimbabwe

Harare, 2002

Food and Agriculture Organization of the United Nations (FAO)
Sub-Regional Office for East and Southern Africa (SAFR)
Harare, 2002

The views expressed in this paper are those of the authors and do not necessarily reflect the views of the Food and Agriculture Organization of the United Nations

The designations employed and the presentation of the material in this publication do not imply the expression of any opinion whatsoever on the part of the Food and Agriculture Organization of the United Nations concerning the legal status of any country, territory, city or area of its authorities, or concerning the delimitation of its frontiers or boundaries

All rights reserved. No part of this publication may be reproduced, stored in a retrieval system, or transmitted in any form or by any means, electronic, mechanical, photocopying or otherwise, without the prior permission of the copyright owner

© FAO SAFR 2002

Design and Layout: Fontline International, Mauritius
Printed by: Préci-ex, Les Pailles, Mauritius

Contents

List of figures v
List of tables vii
Foreword ix
Acknowledgements xi
Unit conversion table xii
List of abbreviations xiii

1. INTRODUCTION 1
   1.1. Definitions 1
   1.2. Resources assessment 2

2. LAND TOPOGRAPHY AND TOPOGRAPHIC SURVEYS 3
   2.1. Topographic survey methods 3
   2.2. Survey equipment and material 4
      2.2.1. Accessories for survey instruments 4
      2.2.2. Additional material for setting out the area and marking the stations 8
      2.2.3. Materials for recording the data 8
   2.3. The theodolite 8
      2.3.1. Components of a theodolite 8
      2.3.2. Setting up a theodolite 10
      2.3.3. Selecting benchmarks 11
      2.3.4. Reading and recording 11
      2.3.5. Reading the angles 12
      2.3.6. Measuring horizontal angles 13
      2.3.7. Measuring vertical angles 14
      2.3.8. The stadia system 14
      2.3.9. Calculating horizontal distances, vertical heights and reduced levels 15
      2.3.10. Accuracy 18
   2.4. The level 18
   2.5. Tacheometric survey using the theodolite 18
      2.5.1. The reconnaissance survey 19
      2.5.2. Station marking 19
      2.5.3. The actual survey 19
      2.5.4. Data processing 20
      2.5.5. Plotting 27
      2.5.6. Checking the theodolite 31
      2.5.7 General remarks 33
   2.6 Grid surveys 33
      2.6.1. Setting out the grid 33
      2.6.2. Checking the level instrument 35
      2.6.3. The actual grid survey 36
      2.6.4. Plotting 42
      2.6.5. Use of pegs during implementation 42

3. SOILS AND SOIL SURVEY 45
   3.1. Field observations 45
      3.1.1. Soil pit description 45
      3.1.2. Augering 46

3.1.3. Soil sampling 46
3.1.4. Infiltration test 47
3.2. Laboratory analysis 47
3.2.1. Mechanical analysis 47
3.2.2. Water-holding capacity or total available moisture 48
3.3. Soil map and soil report 50

4. SURFACE WATER RESOURCES 53
4.1. Water yield levels 53
4.2. Rivers 53
4.3. Dams and reservoirs 54
4.3.1. Sedimentation 54
4.3.2. Dam yields 56

5. GROUNDWATER RESOURCES 63
5.1. Groundwater resources and the hydrologic cycle 63
5.2. Groundwater occurrence 64
5.2.1. Aquifers 64
5.2.2. Aquifer types 66
5.3. Groundwater resources development 67
5.3.1. Groundwater exploration 67
5.3.2. Water wells 68
5.3.3. Collector wells 70
5.3.4. Groundwater resources evaluation 71
5.4. Pumping tests 72
5.4.1. The principle 72
5.4.2. Definition of terms 73
5.4.3. Hydraulic properties of confined aquifers 74
5.4.4. Hydraulic properties of leaky and unconfined aquifers 75
5.4.5. Recovery tests 76
5.4.6. Slug tests 76
5.4.7. Well performance tests 77
5.5. Groundwater recharge 79
5.5.1. Water balance equations 79
5.5.2. Chloride mass balance technique 79
5.5.3. Groundwater level fluctuations 80
5.5.4. Environmental isotopes 80
5.6. Groundwater management 80
5.6.1. Groundwater models 80
5.6.2. Lowering groundwater levels 80
5.6.3. Conjunctive use of surface water and groundwater 80
5.6.4. Groundwater monitoring 80

REFERENCES 83

List of figures

1. A level instrument with accessories 4
2. Aluminium tripods used with levels and theodolites 4
3. Plumb bob and its use 5
4. Holding and placing a ranging rod 5
5. Setting out a straight line using ranging rods 6
6. Surveying staffs 6
7. A level plate and its use 6
8. Single prismatic square 7
9. Setting out a right angle using a single prismatic square 7
10. Setting out a perpendicular line using a double prismatic square 7
11. Wooden (timber) pegs 8
12. Essential features of a theodolite 8
13. The Wild T2 universal theodolite and its components 9
14. Turning the foot-screws 10
15. Levelling of the theodolite 10
16. Reading the angles, using a Wild T2 universal theodolite 12
17. Reading the angles, using a Sokkisha TM20H theodolite 13
18. Reading the angles, using a Zeiss THEO 020B theodolite 13
19. Angle projection 13
20. Principle of two axes 14
21. Vertical angle measurement 14
22. The stadia system 15
23. Calculating the horizontal distance 16
24. Calculating the vertical height 16
25. Calculating the reduced level 17
26. Tilting level 19
27. Automatic level 20
28. A closed traverse or polygon 21
29. Coordinates of point P 22
30. Bearings for part of a traverse 23
31. Traverse with read internal angles, using the 360° graduation 24
32. Part of a traverse and coordinates 25
33. Traverse of four stations and calculation of coordinates 26
34. Plotting with a protractor 30
35. Interpolation between two reduced level points using graph paper 30
36. Adjustment of an inclined vertical reticle line 31
37. Face left and face right readings 32
38. Horizontal adjustment of the vertical reticle line 32
39. Vertical adjustment of the horizontal reticle line 32
40. Adjusting the optical plummet 33

41. Setting out of grid points 34
42. Reading grid points with the use of a measuring tape 35
43. Error experienced when setting out grid lines 35
44. Checking the level instrument 36
45. Prinicple of staff reading 36
46. The field survey methodology 37
47. Elimination of error due to disparallelism 39
48. Contour map 42
49. USDA soil texture triangle 47
50. Soil texture class determination, using the USDA soil texture triangle 48
51. Two methods for generalizing soil texture classes 48
52. Typical pF curves for silty clay and loamy fine sand 51
53. Streamflow hydrographs 54
54. Sedimentation in a reservoir created by a dam 55
55. Trap efficiency 56
56. Yield curves for dams with storage ratios greater than 0.5 61
57. The hydrologic cycle 63
58. Systems representation of the hydrologic cycle 64
59. Development of deposits (unconsolidated sedimentary aquifer) in a flood plain 65
60. An idealized sandstone aquifer (consolidated sedimentary formation) 65
61. Schematic illustration of groundwater occurrence in carbonate rock with secondary permeability and enlarged fractures and bedding plane openings 65
62. Various types of aquifers 66
63. Schlumberger VES electrode configuration 68
64. Continuous slot wire wound screen in an unconsolidated formation 69
65. Collector well located near a surface water body 71
66. Drawdown in a pumped aquifer 72
67. Drawdown curves for aquifers with high or low transmissivity and storativity values 72
68. Drawdown versus time for 3 piezometers, located at 30, 90 and 215 metres from a pumping well 75
69. Various head losses in a pumped well 77
70. Hydrograph showing continuous groundwater level decline 81

List of tables

1. Topographic survey instruments and materials 4
2. Example of recording 12
3. Layout of a spreadsheet for calculating coordinates, using 360° graduation 28
4. Calculation of station coordinates, using a spreadsheet (360° graduation) 29
5. Extract of Nabusenga irrigation scheme (Zimbabwe) field survey data from the survey notebook: recording using the rise and fall method 40
6. Extract of Nabusenga irrigation scheme (Zimbabwe) field survey data from the survey notebook: recording using the height of line of collimation method 41
7. Example of a soil pit description 46
8. Typical basic infiltration rate 47
9. Range of available moisture contents for different soil types 50
10. Available moisture for different soil types 50
11. Example of hydrological data from Gwayi catchment in Zimbabwe 58
12. Yield/live storage rations 59
13. Estimate of the water balance of the world 64
14. Optimum groundwater entrance velocity through a well screen 70
15. Guidelines to range of water level measurements in a pumping well and in piezometers 73

Foreword

The first edition of the Irrigation Manual was published in 1990 in two volumes by the "Smallholder Irrigation" Project (UNDP/FAO/AGRITEX/ZIM/85/004). The authors of this first edition were FAO Staff on the project[1]. This edition of one hundred copies ran out within two years from publishing.

Although the manual was written with Zimbabwe in mind, it soon became popular in several countries of the sub-region. In view of the high demand, it was decided to proceed with a second edition. The experience gained from using the first edition of the manual as the basic reference for the AGRITEX[2] training programme of irrigation practitioners and the University of Zimbabwe, was incorporated in the second edition which was published in 1994, in one volume by the "Technical Assistance to AGRITEX" project (UNDP/FAO/AGRITEX/ZIM/91/005). This second edition was published under the same authors as the first edition, with the assistance of a review committee from AGRITEX[3]. The two hundred copies of this edition also ran out within two years of publishing.

In 1995, the FAO Sub-regional Office for East and Southern Africa (SAFR) was established in Harare, Zimbabwe, in order to provide easy access to technical assistance and know-how for the countries of the sub-region[4]. In view of the high demand for support in the field of smallholder irrigation by the countries of the sub-region, this office was strengthened with four water resources management officers and a number of on-going programmes have been developed to provide this support. One of these programmes is the publishing of a new regional edition of the irrigation manual in support of the on-going national training programmes within several countries in the sub-region and to provide the basic reference for another important programme, which is the sub-regional training on planning and design of smallholder irrigation schemes.

This third edition aspires to further strengthen the engineering, agronomic and economic aspects of the manual and to introduce new modules related to social, health and environmental aspects of irrigation development. The emphasis is directed towards the engineering, agronomic and economic aspects of smallholder irrigation, in view of the limited practical references in this area. This manual, being directed to the irrigation practitioner, does not provide an in-depth analysis of the social, health and environmental aspects in irrigation development. It only attempts to introduce the irrigation practitioner to these areas, providing a bridge between the various disciplines involved in irrigation development.

The initiatives and efforts of the Water Resources Management Team of SAFR in publishing this Manual are considered as a valuable contribution to the dissemination of knowledge and training of irrigation practitioners in the sub-region. The material covered by this manual is expected to support both national and sub-regional training programmes in the planning, design, construction, operation and maintenance and on-farm water management of irrigation schemes. This will support the implementation of FAO's mandate to increase food production through water control, intensification and diversification, which are the basic components of the Special Programme for Food Security (SPFS).

The manual is the result of several years of field work and training irrigation engineers in the sub-region. The approaches have been field tested and withstood the test of time.

---

[1] *A.P. Savva, Chief Technical Advisor; J. Stoutjesdijk, Irrigation Engineer; P.M.A. Regnier, Irrigation Engineer; S.V. Hindkjaer, Economist.*

[2] *Agritex: Department of Agricultural Technical and Extension Services, Ministry of Lands and Agriculture, Zimbabwe.*

[3] *Review committee: E. Chidenga, Acting Chief Irrigation Officer; P. Chipadza, Senior Irrigation Specialist; A. Dube, Senior Irrigation Specialist; L. Forichi, Irrigation Specialist; L. Madhiri, Acting Principal Irrigation Officer; S. Madyiwa, Irrigation Specialist; P. Malusalila, Chief Crop Production; R. Mariga, Assistant Secretary, Economic and Markets Branch; D. Tawonezvi, Agricultural Economist.*

[4] *The following 21 countries are part of the FAO-SAFR region: Angola, Botswana, Burundi, Comoros, Eritrea, Ethiopia, Kenya, Lesotho, Madagascar, Malawi, Mauritius, Mozambique, Namibia, Rwanda, Seychelles, South Africa, Swaziland, Tanzania, Uganda, Zambia, Zimbabwe.*

For ease of reference to the various topics covered by this Manual, the material has been divided into 14 modules, covering the following:

Module 1:	Irrigation development: a multifaceted process
Module 2:	Natural resources assessment
Module 3:	Agronomic aspects of irrigated crop production
Module 4:	Crop water requirements and irrigation scheduling
Module 5:	Irrigation pumping plant
Module 6:	Guidelines for the preparation of technical drawings
Module 7:	Surface irrigation systems: planning, design, operation and maintenance
Module 8:	Sprinkler irrigation systems: planning, design, operation and maintenance
Module 9:	Localized irrigation systems: planning, design, operation and maintenance
Module 10:	Irrigation equipment for pressurized systems
Module 11:	Financial and economic appraisal of irrigation projects
Module 12:	Guidelines for the preparation of tender documents
Module 13:	Construction of irrigation schemes
Module 14:	Monitoring the technical and financial performance of an irrigation scheme

To those who have been waiting for so long for a practical irrigation engineering manual: here it is. I am sure that it will have a lot to offer to both new and experienced irrigation engineers.

Victoria Sekitoleko
FAO Sub-Regional Representative
for East and Southern Africa

Acknowledgements

The preparation of the third edition of the Irrigation Manual is an initiative of FAO's Sub-Regional Office for East and Southern Africa (SAFR).

The whole project was managed and coordinated by Andreas P. Savva and Karen Frenken, Water Resources Development and Management Officers at FAO-SAFR, who are the main authors. Karen Frenken also is the main technical editor.

The following persons provided valuable inputs into this Volume I: Fabeon Chigumira (Module 3), Mawira Chitima (Module 4), Owen Hughes (Module 3), Tove Lilja (Module 1 and 5), Simon Madyiwa (Module 1 and 5), Victor Mthamo (Module 5), Kennedy Mudima (Module 1, 4 and 5), Samuel Sunguro (Module 2), Lee Tirivamwe (Module 2, 3, 4 and 6).

The preparation of several drawings by Solomon Maina is acknowledged.

Special appreciation is extended to Chris Pappas for his substantial contribution to the layout of the Irrigation Manual.

Unit conversion table

Length

1 inch (in)	0.0254 m
1 foot (ft)	0.3048 m
1 yard (yd)	0.9144 m
1 mile	1609.344 m
1 metre (m)	39.37 inches (in)
1 metre (m)	3.28 feet (ft)
1 metre (m)	1.094 yards (yd)
1 kilometre (km)	0.62 miles

Area

1 square inch (in^2)	6.4516×10^{-2} m^2
1 square foot (ft^2)	0.0929 m^2
1 square yard (yd^2)	0.8361 m^2
1 acre	4046.86 m^2
1 acre	0.4046 ha
1 square centimetre (cm^2)	0.155 square inches (in^2)
1 square metre (m^2)	10.76 square feet (ft^2)
1 square metre (m^2)	1.196 square yard (yd^2)
1 square metre (m^2)	0.00024 acres
1 hectare (ha)	2.47 acres

Volume

1 cubic inch (in^3)	1.6387×10^{-5} m^3
1 cubic foot (ft^3)	0.0283 m^3
1 cubic yard (yd^3)	0.7646 m^3
1 cubic centimetre (cm^3)	0.061 cubic inches (in^3)
1 cubic metre (m^3)	35.315 cubic feet (ft^3)
1 cubic metre (m^3)	1.308 cubic yards (yd^3)

Capacity

1. imperial gallon	0.0045 m^3
1. US gallon	0.0037 m^3
1. imperial barrel	0.1639 m^3
1. US. barrel	0.1190 m^3
1 pint	0.5681 l
1 US gallon (dry)	0.0044 m^3
1 litre (l)	0.22 imp. gallon
1 litre (l)	0.264 U.S. gallon
1 litre (l)	0.0061 imperial barrel
1 hectolitre (hl)	100 litres = 0.61 imperial barrel = 0.84 US barrel
1 litre (l)	1.760 pints
1 cubic metre of water (m^3)	1000 l = 227 U.S. gallon (dry)
1 imperial barrel	164 litres

Mass

1 ounce	28.3286 g
1 pound	0.4535 kg
1 long ton	1016.05 kg
1 short ton	907.185 kg
1 gram (g)	0.0353 ounces (oz)
1 kilogram (kg)	1000 g = 2.20462 pounds
1 ton	1000 kg = 0.984 long ton = 1.102 short ton

Pressure

1 pound force/in^2	6894.76 N/m^2
1 pound force/in^2	51.7 mm Hg
1 Pascal (PA)	1 N/m^2 = 0.000145 pound force /in^2
1 atmosphere	760 mm Hg = 14.7 pound force/in^2 (lbf/in^2)
1 atmosphere	1 bar
1 bar	10 metres
1 bar	100 kpa

Energy

1 B.t.u.	1055.966 J
1 foot pound-force	1.3559 J
1 B.t.u.	0.25188 Kcalorie
1 B.t.u.	0.0002930 KWh
1 Joule (J)	0.000947 B.t.u.
1 Joule (J)	0.7375 foot pound-force (ft.lbf)
1 kilocalorie (Kcal)	4185.5 J = 3.97 B.t.u.
1 kilowatte-hour (kWh)	3600000 J = 3412 B.t.u.

Power

1 Joule/sec	0.7376 foot pound/sec
1 foot pound/sec	1.3557 watt
1 cheval-vapor	0.9861 hp
1 Kcal/h	0.001162 kW
1 watt (W)	1 Joule/sec = 0.7376 foot pound/sec (ft lbf/s)
1 horsepower (hp)	745.7 watt 550 ft lbf/s
1 horsepower (hp)	1.014 cheval-vapor (ch)
1 kilowatt (kW)	860 Kcal/h = 1.34 horsepower

Temperature

^{0}C (Celsius or centigrade-degree)	$^0C = 5/9 \times (^0F - 32)$
^{0}F (Fahrenheit degree)	$^0F = 1.8 \times {}^0C + {}^0F$
K (Kelvin)	$K = {}^0C + 273.15$

List of abbreviations

A	Area
AM	Available Moisture
BM	Benchmark
BS	Back Station
CA	Catchment Area
CV	Coefficient of Variation
D	Distance
D	Bulk density
DC	Dam Capacity
DS	Dead Storage
E	Error or misclosure
E	Evaporation
EF	Evaporation Factor
EI	Evaporation Index
EPD	Equivalent Pore Diameter
FC	Field Capacity
FS	Forward Station
H	Height
HP	Hewlett Packard
Hz	Horizontal angle
I	Current
IS	Intermediate Station
K	Hydraulic conductivity
K	Constant
L	Length
MAI	Mean Annual Inflow
MAR	Mean Annual Runoff
P	Precipitation
PVC	Polyethylene Vinyl Chloride
PWL	Pumping Water Level
PWP	Permanent Wilting Point
Q	Discharge
R	Rainfall
R	Recharge
R	Resistance
R	Runoff
RL	Reduced Level
RO	Reference Object
S	Staff intercept
SA	Sediment Allowance

SC	Sediment Concentration
SM	Sediment Mass
SM	Soil Moisture
SMT	Soil Moisture Tension
SR	Storage Ratio
SV	Sediment Volume
SWL	Static Water level
T	Transmissivity
TBM	Temporary Benchmark
U	Live storage capacity of dam
UNEP	United Nations Environment Programme
V	Velocity
V	Vertical angle
V	Vertical height
V	Volume
VES	Vertical Electric Sounding
WA	Water Availability
WHC	Water Holding Capacity
WP	Wilting Point
X	X coordinate
Y	Y coordinate

Chapter 1
Introduction

Land is not regarded simply in terms of soil and topography, but encompasses features such as underlying superficial deposits, climate and water resources, as well as the plant and animal communities that developed as a result of the interaction of these physical conditions (FAO/UNEP, 1999). The results of human activities, reflected by changes in vegetative cover or by structures, are also regarded as features of the land. Changing one of the factors, such as land use, has potential impacts on other factors, such as flora and fauna, soils, surface water distribution and climate. Changes in these factors can be readily explained by ecosystem dynamics, and the importance of their relationships in planning and management of land resources has become increasingly evident.

1.1. Definitions

Land and land resources: Land and land resources refer to a delineable area of the earth's terrestrial surface, encompassing all attributes of the biosphere immediately above or below its surface, including those of the near-surface climate, the soil and terrain forms, the surface hydrology (including shallow lakes, rivers, marshes and swamps), the near-surface sedimentary layers and associated groundwater and geohydrological reserve, the plant and animal populations, the human settlement pattern and physical results of past and present human activity, such as terracing, water storage or drainage structures, roads, buildings, etc. (FAO/UNEP, 1997).

Soil: Soil is a three-dimensional body, occupying the uppermost part of the earth's crust, having properties that differ from the underlying rock material as a result of interactions between climate, living organisms (including human beings), parent material and relief over periods of time. Distinctions are made between 'soils' in terms of differences in internal characteristics and/or in terms of the gradient, slope-complexity, micro-topography and stoniness and rockiness of surface. 'Soil' is a narrower concept than 'land', soil is one of the attributes of land (Euroconsult, 1989).

Landform: Landform refers to any physical, recognizable form or feature on the earth's surface, having a characteristic shape, and produced by natural causes; it includes major forms such as a plain, plateau, or mountain, and minor forms such as a hill, valley, slope, esker, or dune. Taken together, the landforms make up the surface configuration of the earth.

Landscape: Landscape is a distinct association of landforms, as operated on by geological processes (exo- or endogenic), that can be seen in a single view.

Topography: Topography encompasses the relief and contours of a land surface.

Land cover: Land cover is the observed (bio)physical cover on the earth's surface (Di Gregorio and Jansen, 1998).

Land use: Land use is characterized by the arrangements, activities and inputs by people to produce, change or maintain a certain land cover type (Di Gregorio and Jansen, 1998). Land use defined in this way establishes a direct link between land cover and the actions of people in their environment.

Land surveying: Land surveying deals with the measurements of land and its physical features accurately, and the recording of these features on a map. It is concerned with three main activities, namely measurement of length, levelling, and angular measurements. Land surveying comprises geodetic surveying, topographic surveying, photogrammetry, cadastral surveying, hydrographic surveying and engineering surveying.

Land levelling: Land levelling is the process of measuring the difference in elevation between two or more points.

Land evaluation and land classification: Land evaluation is the process whereby the suitability of land for specific purposes, such as irrigated agriculture, is assessed (FAO, 1985a). Land evaluation involves the selection of suitable land and suitable cropping, and of irrigation and management alternatives that are physically and financially practicable and economically viable. The main product of land evaluation is a land classification that indicates the suitability of various kinds of land for specific land uses, usually depicted on maps with accompanying reports.

1.2. Resources assessment

Land evaluation and classification for irrigation purposes is a multidisciplinary undertaking involving soils scientists, hydrologists, irrigation specialists, environmentalists, sociologists, extensionists, agricultural economists, etc. For an in-depth study of land evaluation for irrigated agriculture the reader is referred to FAO (1985a).

This module deals with the natural resources assessment and particularly concentrates on topography and topographic surveys (Chapter 2), soils and soil surveys (Chapter 3), surface water resources (Chapter 4) and groundwater resources (Chapter 5).

Other aspects, like climate, environment, health and socio-economic aspects, economic and financial appraisal, irrigation engineering, are covered in other modules.

Chapter 2
Land topography and topographic surveys

Land topography is often a major factor in irrigation evaluation as it may influence the choice of irrigation method, drainage, the type of erosion, irrigation efficiency, costs of land development, size and shape of fields, labour requirements, range of possible crops, etc.

Four aspects of topography that have a special bearing on irrigation suitability are slope, micro-relief, macro-relief and position (FAO, 1985a):

- *Slope:* Slope may affect the following factors: intended methods of irrigation, erodibility and erosivity, cropping pattern, mechanization problems, exposure to wind, etc. Slope limitations vary greatly from country to country. Critical limits for different methods of irrigation are given in Module 1 and Module 7.
- *Micro-relief:* This term applies to minor surface undulations and irregularities of the land surface. Estimates of grading and levelling requirements will depend on whether surface, sprinkler or localized irrigation techniques are used. The information required for an assessment of land grading costs includes: cut and fill, the total volume of earth moved, the depth of cut, distance of transport, soil conditions and desired precision of the final grading and type of equipment available. Details on land levelling are given in Module 7. Topsoil depth and subsoil quality may limit the amount of grading that is advisable, or greatly increase the cost if it is necessary to conserve and later respread the topsoil. Some subsoils are unproductive at first, but gradually rehabilitate with irrigation and fertilizer or organic matter applications.
- *Macro-relief:* Permanent topographic features where slopes change frequently in gradient and direction may influence the choice of irrigation method, field sizes and shape, and land development costs.
- *Position in relation to command area and accessibility:* The elevation and distance of the water source often affects the 'irrigable' land area in gravity-fed schemes. The area commanded may be increased by pumping, or by constructing tunnels, inverted siphons and other structures through natural or human-made barriers, or by reservoir construction. Topographic data are often used in evaluating the infrastructural alternatives and their land development costs. Topographic data are also required in the case of flood hazard and the design of flood protection measures and for the design of surface or subsurface drainage.

Irrigation designs require contour intervals that should normally be not more than 0.5 m, and an appropriate map scale is required. Very detailed topographic data are required for many irrigation structures, especially along routes of probable canals and drains.

2.1. Topographic survey methods

Topographic surveys aim at describing the land topography. A topographic survey should always be carried out for the preparation of a contour map, which will serve as the basis for the design of any irrigation scheme. Two widely used methods of topographic surveying are the tacheometric survey (Section 2.5) and the grid survey (Section 2.6). When dealing with small surface irrigation systems, with small differences in elevation, a grid survey is recommended. For pressurized irrigation systems (sprinkler, drip, etc.), the tacheometric method is usually used. As a rule, grid surveys require more time in the field and less in calculations, while the time requirements for the tacheometric method are the opposite.

While formerly only analogue instruments were available for tacheometric surveys, at present digital instruments are more readily available on the market. The main difference between an analogue and a digital instrument is the read-out method. Instead of an operator having to note down a reading from a measuring staff, a digital instrument is able to take an automatic reading using barcodes on the staff, which is definite for every segment, and calculate the corresponding height. It is able to do this in just a few seconds and removes the possibility of a reading error by the operator. Readings are automatically recorded on a PC-card.

For training purposes, this Module will deal with the analogue instruments and will explain the manual calculations as well as some basic programmes that can be used for the calculations. The reason for this is that a person who knows how to work with an analogue instrument will, in general, also be able to work with a digital instrument, while the inverse is not necessarily the case. Although some of the equipment explained in this Chapter is no longer

produced, such as the Wild T2 theodolite, it is still available in most government departments in the region and will be still used in the future by irrigation engineers and surveyors. This is another reason for describing this type of equipment in detail in this Chapter.

2.2. Survey equipment and material

The following equipment and materials are needed to conveniently carry out a topographic survey:

- The survey instrument (theodolite or level instrument) plus accessories (tripod, plump bob, ranging rods, staff, level plate, measuring tape, prismatic square)
- Equipment and materials for the reconnaissance survey and for setting out the area, marking the stations and installing the benchmarks (plumb bob, ranging rods, measuring tape, prismatic square, steel and wooden pegs, cement, stone and sand, picks and shovels, buckets, white paint, hammer)
- Materials for recording the data (ruler, pencil, sharpener, notebook, preferably a pocket calculator as well)

Table 1 lists the survey equipment and materials and the survey method associated with each one of them.

Some of the equipment and materials are briefly described in the following sections. The theodolite and the level instrument are described more in detail in Section 2.3 and 2.4 respectively.

Table 1
Topographic survey instruments and materials

Instrument/materials	Survey method	
	Tacheometry	Grid
Theodolite	x	
Level (automatic, dumpy, tilting, etc.)		x
Tripod	x	x
Plumb bob		x
Ranging rods	x	x
Staff	x	x
Measuring tape	x	x
Prismatic square		x
Steel and wooden pegs	x	x
Hammer	x	x
Cement, stone, sand	x	x
Picks and shovels	x	x
Bucket	x	x
White paint	x	x
Notebook, ruler, pencil, sharpener, calculator	x	x

2.2.1. Accessories for survey instruments

Figure 1 gives an overview of accessories for a survey instrument.

Figure 1
A level instrument with accessories (Source: Eijkelkamp, undated)

Tripod

The tripod is the three-legged support on which the survey instrument is mounted (Figure 1 and 2). When setting up, the legs of the tripod are extended until the tripod head is roughly at eye level. Then the legs are spread so that the tips

Figure 2
Aluminium tripods used with levels and theodolites (Source: Leica, 1993)

form a regular triangle on the ground, after which the tripod legs are firmly fixed into the ground.

Plumb bob

The plumb bob consists of a piece of metal (the bob) attached to a string (Figure 3). It is used to check whether a level instrument or prismatic square is centrally located above a point, for example a peg, or to check whether objects are vertical (Figure 4). On a theodolite the optical plummet replaces the plumb bob (Section 2.3).

Ranging rod

Ranging rods are straight round poles, usually 2, 2.5 or 3 m long and made of wood or metal (Figure 1 and 4). They are normally painted with alternate red and white bands of 0.5 m length each. They are tipped with a pointed steel shoe to enable driving them into the ground. The correct way to hold a ranging rod is to keep it loosely between thumb and index finger, about 10 cm above the soil (Figure 4a). When the observer indicates that the ranging rod is in the right position, the person holding the rod loosens it. The sharp bottom point leaves a mark on the soil exactly where the rod has to be placed. Once in place, it should be checked if it is vertical, for example with a carpenter level or a plumb (Figure 4b). Ranging rods are used for sighting in straight lines, marking points, etc. Figure 5 shows how they are used to make a straight line. After fixing the position of two rods (A and B), by using a survey instrument for example, other rods (C and D) are used to continue setting out other points on that straight line.

Figure 3
Plumb bob and its use (Source: FAO, 1985b)

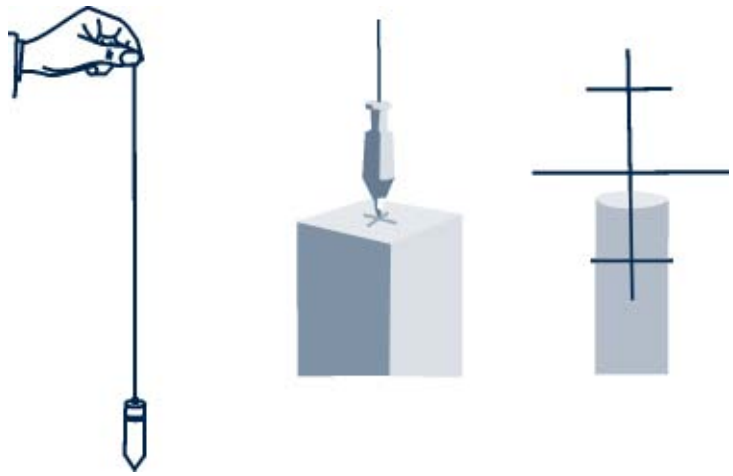

Figure 4
Holding and placing a ranging rod (Source: FAO, 1985b)

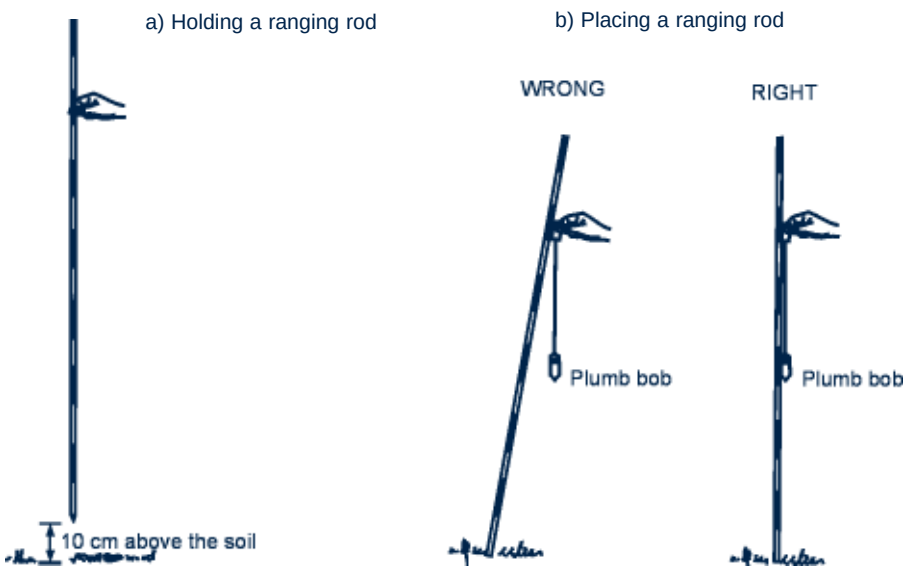

Figure 5
Setting out a straight line using ranging rods (Source: FAO, 1985b)

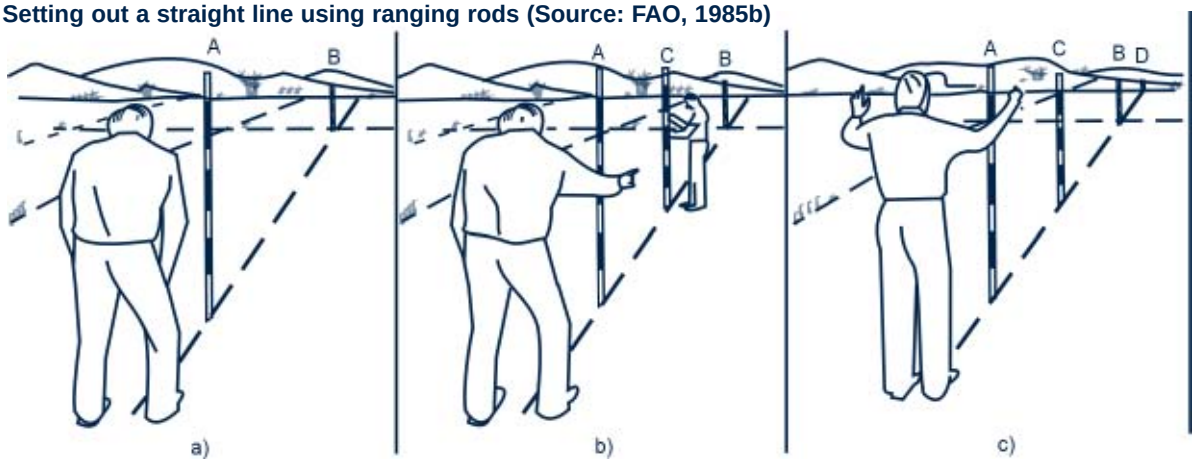

The measuring staff

Measuring staffs used in topographic surveys are usually between 3 and 5 m long. There are folding staffs, which can be unfolded and folded into 1 m sections, and there are telescopic staffs, consisting of parts that can slide over one another to compress or elongate. Most modern designs are manufactured in aluminium alloys. They have a centimetre graduation and readings from the staff can be estimated at 1 mm. The upper 5 cm (5 x 1 cm) of the 10 cm interval are connected by a vertical band to form an E-shape, natural or reversed (Figure 6). The graduations of the first metre length are coloured black on a white background, while the graduations of the second metre length are coloured red on a white background (Figure 1). The two colours are repeated alternately for the subsequent metres.

Figure 6
Surveying staffs (Source: Leica, 1993)

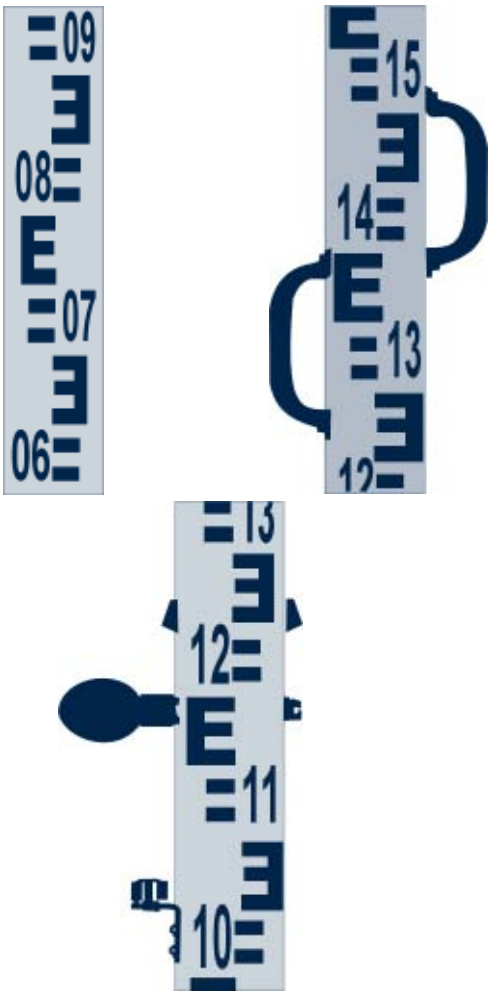

Level plate

A level plate is a small steel plate with sharp points at the bottom (Figure 7). It can be used to give a firm surface for the measuring staff to ensure that the elevation does not change when turning the staff during a change point.

Figure 7
A level plate and its use (Source: Leica, 1993)

Figure 8
Single prismatic square (Source: FAO, 1985b)

Measuring tape

Measuring tapes are made of steel, linen or synthetic material. They are available in lengths of up to 100 m, with graduation in centimetres and metres. Tapes are used to measure distances. It is important that measuring tapes are wiped clean before rewinding into their cases.

Prismatic square

A prismatic square consists of a metal frame with a handle in which one prism (single prismatic square) or two prisms (double prismatic square) are fitted. They are used to set out right angles and perpendicular lines. Figure 8 shows a single prismatic square. With the single prismatic square one can fix right angles (Figure 9). The two prisms of the double prismatic square make it possible to look, at the same time, at a right angle to the left, a right angle to the right and straight ahead through openings above and below the prisms. This makes it possible to see the baseline and

Figure 9
Setting out a right angle with a single prismatic square (Source: FAO, 1985b)

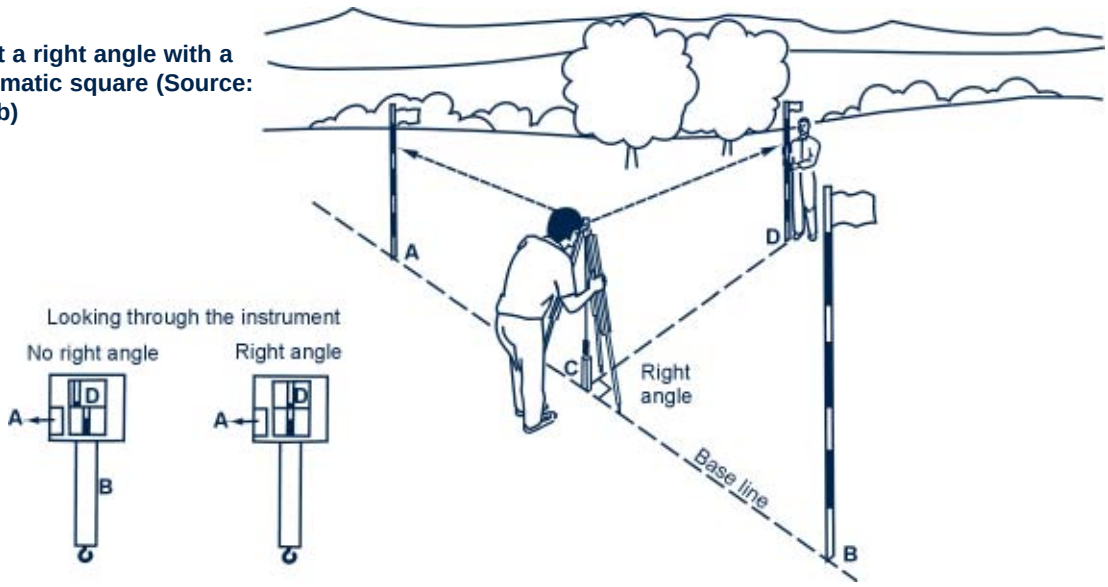

Figure 10
Setting out a perpendicular line with a double prismatic square (Source: FAO, 1985b)

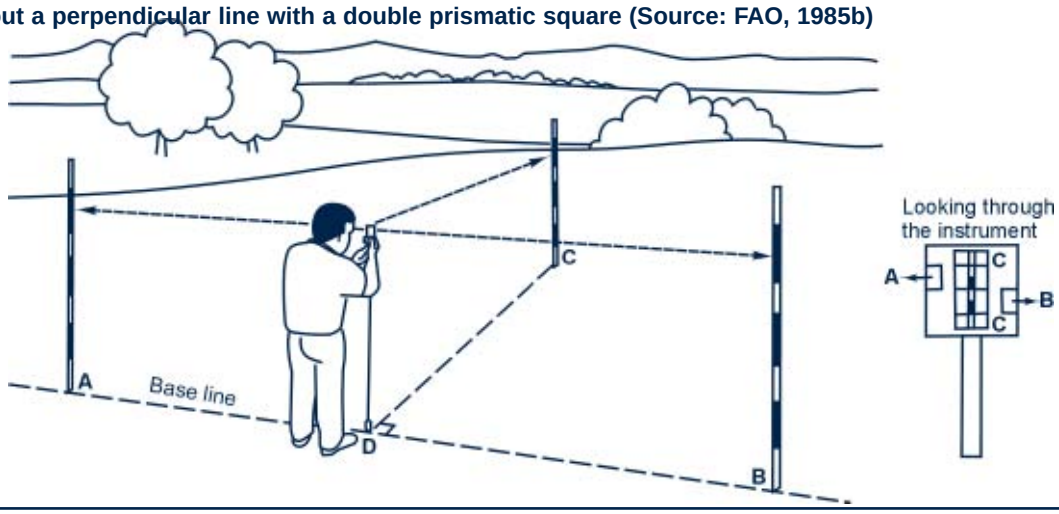

the perpendicular line at the same time, therefore no assistant is needed to check whether the operator is standing on the baseline (Figure 10).

2.2.2. Additional material for setting out the area and marking the stations

Pegs and hammer

Pegs are made of steel, timber, or straight tree branches. The length should be 40 to 60 cm and they should have a sharp point to ease them being driven into the soil, with a hammer if necessary (Figure 11). They are used for indicating points in the field that require more permanent or semi-permanent marking, for example the benchmarks (steel pegs) or points of a grid (wooden pegs).

Figure 11
Wooden (timber) pegs

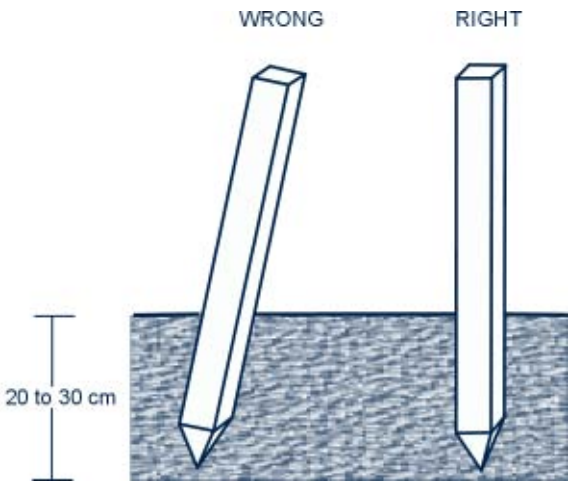

Cement, concrete stone, sand, picks, shovels, paint

These materials are used to make benchmarks and permanent points on the baseline (grid survey) and survey stations (tacheometric survey).

2.2.3. Materials for recording the data

Notebooks, rulers, pencils, sharpeners, pocket calculator are used for the actual recording of data during the field survey.

2.3. The theodolite

2.3.1. Components of a theodolite

The theodolite is an instrument used to measure both horizontal and vertical angles. It consists of the following main parts: a fixed base with tribrach, a movable upper part and a telescope (Figure 12). It is one of the most important instruments used in survey work. Different types of theodolites are available from different manufacturers, but they all have basically the same components, as shown in Figure 12 and 13, and the main ones are described below.

Figure 12
Essential features of a theodolite
(Source: Wild Heerbrugg, undated)

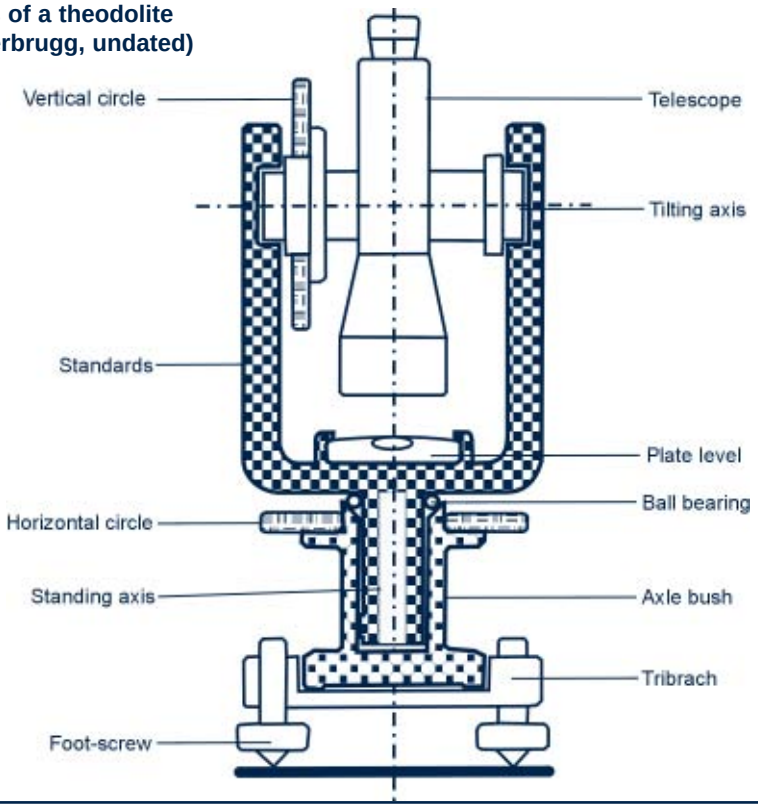

Figure 13
The Wild T2 universal theodolite and its components (Source: Wild Heerbrugg, undated)

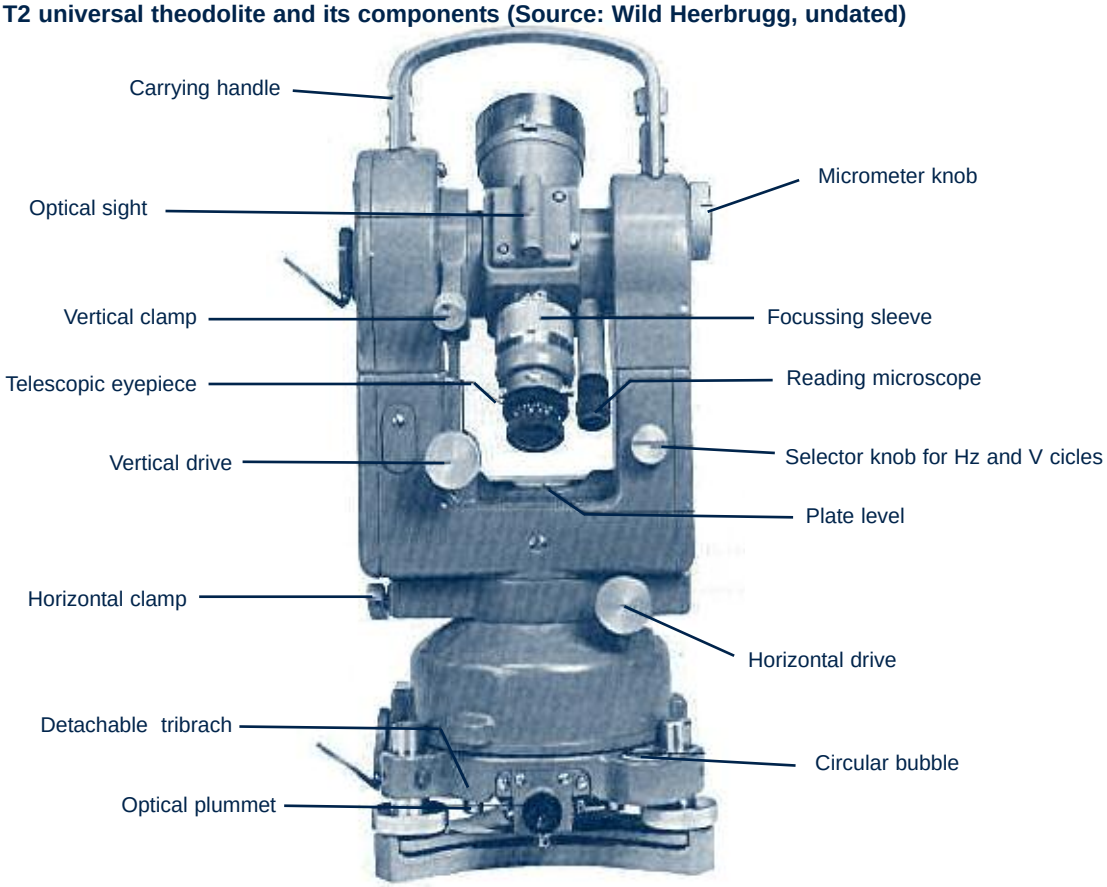

- The *base*, with the *tribach*, is fixed on the tripod with one clamping screw. The theodolite is centered over the station by means of a plumb bob or a built-in *optical plummet*. Rough levelling-up of the base is done with the circular bubble, by means of three foot-screws (see Section 2.3.2). The tribrach supports the remainder of the instrument. Many instruments have the facility for detaching the upper part of the theodolite from the tribrach, which is useful when transporting the theodolite.
- The *lower plate* carries the *horizontal circle*, which can be rotated independently of the base.
- On the upper plate, or alidade, which is rotatable about the vertical or *standing axis*, the two *standards* for the horizontal or trunnion or *tilting axis*, bearing the *telescope* (with the sighting axis) and the *vertical circle,* are fixed. The alidade also contains the reading (system) index of the *horizontal circle*.
- The *plate level*, or alidade tubular level, is used for more accurate levelling-up after the rough levelling-up has been done using the *circular bubble* at the base.
- The *upper plate* and *lower plate* each have separate *clamps* and slow motion *drives* or *screws*. The *upper plate* screws are milled and the lower plate screws are serrated. If the *lower plate* is clamped and the *upper plate* is free, rotation in azimuth (horizontal) gives different readings on the horizontal scale. If the lower plate is free and the upper plate is clamped, rotation in azimuth retains the horizontal scale reading, thus the *horizontal circle* rotates.
- The *telescope*, attached to the *tilting axis*, can be aimed in any direction in space, by means of rotations about its *standing* and *tilting axes*. Fine pointing to a particular target is achieved by using the clamps and the slow motion screws.
- Also attached to the *tilting axis* is the circle *reading microscope*, the *micrometer knob* or screw, and the *vertical circle*. The *vertical circle* usually has an index level so that it can be oriented correctly, in relation to the horizontal, before a vertical angle is read.
- The *focusing sleeve* or screw is attached to the main frame of the *telescope* just in front of the eyepiece.
- The side of the main telescope, viewed from the *eyepiece*, containing the *vertical circle* is called the face.
- When the main *telescope* is rotated about the *tilting axis* from one direction to face in the opposite direction, it is said that it has been transmitted.

2.3.2. Setting up a theodolite

First of all, the tripod is set up over a station, normally a peg containing a steel rod or a nail at the centre. The legs are placed at an equal distance from the peg and their height adjusted to suit the surveyor. The tripod head should be made as level as possible by eye.

After the tripod has been set up, the theodolite is carefully taken out of its case, its exact position being noted to assist in replacement, and is securely attached to the tripod head. The theodolite should always be held by the standards, not by the telescope.

The theodolite is then centered roughly over the station with the optical plummet by shifting two legs of the tripod, leaving one on the ground. The tripod legs must then be firmly pressed into the ground to avoid any further movement as the surveyor moves around it or when heavy traffic passes nearby. The machine is leveled roughly by moving the tripod legs up or down until the bubble of the circular level is centered. When doing fine levelling the foot-screws (Figure 12) are rotated as shown in Figure 14. First, two foot-screws are turned simultaneously in opposite directions. After that, the third screw is turned.

Figure 14
Turning the foot-screws

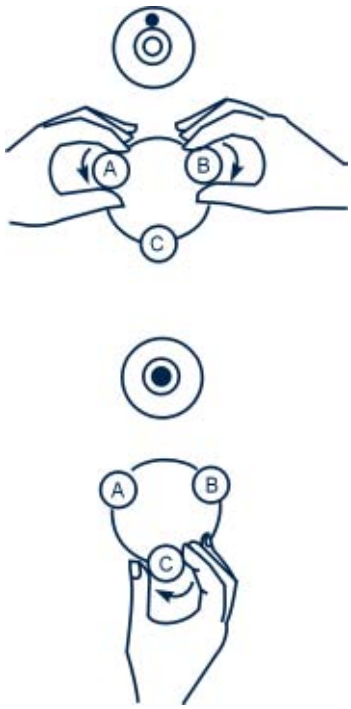

The fine levelling of the machine is carried out as follows (Figure 15):

1. Looking from the top, the alidade is rotated until the plate level is located between two foot-screws, as in Figure 15a. These two foot-screws are turned until the plate level bubble is brought to the centre of its run. The levelling foot-screws are turned in opposite directions simultaneously, as shown in Figure 14, remembering that the bubble will move in a direction corresponding to the movement of the left thumb.
2. The alidade is turned through 90° clockwise (Figure 15b) and the bubble centered, again using the third foot-screw only.
3. The above operations are repeated until the bubble is centered in both positions a and b.
4. The alidade is now turned until it is in a position 180° clockwise from position a, as in Figure 15c. The position of the bubble is noted.
5. The alidade is turned through a further 90° clockwise, as in Figure 15d, and the position of the bubble is again noted.
6. If the bubble is still in the centre of its run for both step 4 and 5 above, the theodolite is level and no further adjustment is needed. If the bubble is not central it should be off-centre by the same amount in both step 4 and 5. This may be, for example, 2 divisions to the left.

Figure 15
Levelling of the theodolite

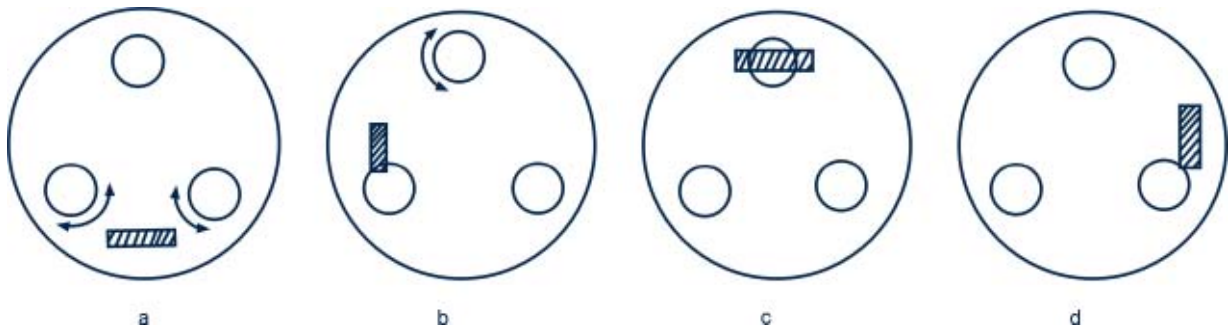

7. To remove the error, the alidade is returned to its initial position (Figure 15a). Again using the two foot-screws located at each side of the plate level (seen from above), the bubble is placed in such a position that half the error is taken out, for example 1 division to the left.
8. The alidade is then turned through 90° clockwise as in Figure 15b and half the error is again taken out.
9. Step 7 and 8 are repeated until half the error is taken out for both positions.
10. The alidade is now slowly rotated through 360° and the plate level bubble should remain in the same position.
11. Loosen the clamping screw, which fixes the theodolite onto the tripod, and center with the optical plummet. Check again if it is still level. If not, repeat the steps starting from 1.

Miscentering is often an important source of mistakes, so the above steps should be carried out very carefully.

Next, parallax should be eliminated by accurately focusing the cross hairs (lines) against a light background and thereafter focusing the instrument on a distant target.

2.3.3. Selecting benchmarks

All topographic surveys should start from a benchmark, either permanent or temporary. Permanent benchmarks (BM) are points of known elevation with reference to a national grid (and linked to the mean sea level). Temporary benchmarks (TBM) can be used as reference points for surveys. They are established as local reference points for a particular survey and can either be related or unrelated to the national grid of elevations. They should be cast in concrete with dimensions of at least 30 cm x 30 cm x 60 cm (length x width x depth). A pin, for example a steel rod of 10 mm diameter, is embedded in the centre of the benchmark and is used to put the staff on for the actual reading. If present near the area to be surveyed, a BM with known height can be used to give a height to the TBM. If there is no BM in the vicinity, the TBM can be given an arbitrary value, for example 100.00 m. It is not recommended to choose 0.00 m as value for the TBM in order to avoid negative heights of field points.

2.3.4. Reading and recording

It is important to measure the height of instrument (from the red dot at the trunnion or tilting axis to the top of peg). This should be done first, as it is easy to forget about it afterwards when one has gone through a number of readings.

The base is fixed by locking the serrated screw with yellow dot while pointing north at 00°00'. Use the compass on the side of the theodolite to locate North. If there is no compass, point the telescope approximately to the North.

Unlock the alidade with the milled screw and shoot a number of reference objects (RO), such as the corner of a house, tank, electricity pole, etc., and note down the angle.

Shoot the forward station or fore sight (FS) and note all readings: the three hair (horizontal line) readings, the vertical angle and the horizontal angle. It is good practice to read the horizontal angle last, as this angle should remain the same when moving the machine (see below).

After shooting all necessary points (a grid of 20 m x 20 m is appropriate for irrigation system designs), read back to the RO and check for mistakes. Then shoot the FS again, carry the bearing as explained below, and continue the survey, starting with the station from where the machine was moved and which is now the back station or back sight (BS).

Carrying the bearing comprises the following steps (see also Section 2.5.4):

a. Leave the alidade fixed to the lower plate (locked)
b. Unlock the base by opening the serrated screw with the yellow dot, so that the theodolite can turn free on the tribrach. The same horizontal angle noted when viewing the FS can still be read.
c. Detach the theodolite from the tribrach and place it back in its case.
d. Pick up the tripod and move to the FS.
e. Center and level the theodolite above this new station as explained earlier.
f. Transit the telescope (face right) and shoot the BS so that the vertical hair is on the centre of the staff.
g. Lock the base and do the fine adjustment with the slow motion serrated base-screw, until the vertical hair is exactly in the centre of the staff.
h. Transit the telescope, unlock the alidade (with the milled screw) and swing the alidade 180°. Point again at the BS with the vertical hair on the staff. Always try to have the vertical hair coincide with the centre of the lower part of the staff, ensuring a more accurate positioning of the peg.
i. Fix the alidade and fine adjust with the slow motion milled screw.

Table 2
Example of recording

Instrument position	Shooting at	Hair reading Lower	Middle	Upper	Vertical angle	Horizontal angle	Remarks
BM1							
(height of instrument is 135.5 cm)	P1	1.00	2.00	3.00	90.51.15	241.01.50	FS
	Intermediate	1.00	1.50	2.00	90.13.10	200.11.20	field edge
	Intermediate	0.50	1.00	1.50	90.04.00	191.10.20	tree
	.	.	.	.	.	.	.
	.	.	.	.	.	.	.
	.	.	.	.	.	.	.
	P1	1.00	2.00	3.00	90.51.15	241.01.50[(a)]	FS
P1							
(height of instrument is 140.0 cm)	BM1	1.50	2.50	3.50	89.09.45	61.01.50[(b)]	BS
	P2	1.00	1.90	2.80	89.10.20	250.40.30	FS
	Intermediate	0.40	0.80	1.20	89.00.10	80.25.00	Anthill
	.	.	.	.	.	.	.
	.	.	.	.	.	.	.
	.	.	.	.	.	.	.
	P2	1.00	1.90	2.80	89.10.20	250.40.30	FS

(a) should be equal to (b) minus (or plus) 180°

The reading of the horizontal angle should exactly read the horizontal angle from the previous station to the present station plus 180° or minus 180°. Table 2 gives an example of the recording of the readings for two stations.

2.3.5. Reading the angles

Different theodolites can have different methods of readings. In addition to the method given for the Wild T2 theodolite (which is the theodolite that has been described as an example in Section 2.3.1), two other examples are also given below.

Circle reading method of the Wild T2 Universal Theodolite

The eyepiece of the reading microscope is turned until the circle graduation lines (top window of Figure 16) are in focus. The horizontal (Hz) or vertical (V) circle is then selected using the selector knob. The Hz and V reading circles are distinguished by the colour of the windows. Yellow is for the Hz circle and white is for the V circle. The method of reading is the same for both circles. The estimation of reading is 1". Figure 16 shows the reading for the 360° model (a) and for the 400g model (b).

Circle reading method of the Sokkisha TM20H Theodolite

Minutes (') and seconds (") are read by turning the adjustment screw until the single hair moves exactly in between the double hairs of the horizontal angle reading or the vertical angle reading. The graduation value of the reading scale is 10" and the estimation of the reading is 5".

Figure 16
Reading of the angles, using a Wild T2 universal theodolite (Source: Wild Heerbrugg, undated)

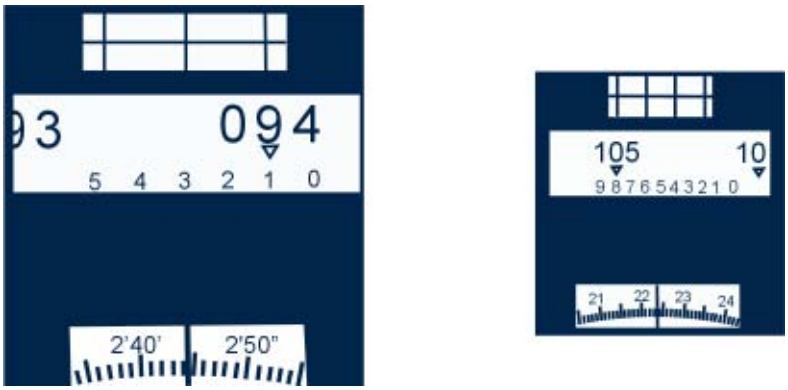

a. Hz = 94°12'44" (360° graduation)

b. Hz = 105,8224g (400g graduation)

Figure 17

Reading of the angles, using a Sokkisha TM20H theodolite

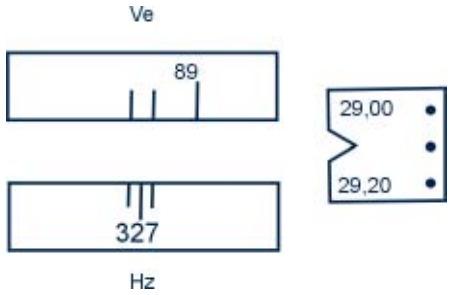

Hz = 327°29'10"

Only one angle is read at a time. For example, in Figure 17 only the horizontal angle is read. In order to make the vertical angle reading, the adjustment screws have to be used again to move the single hair of that angle to read in between the double hairs.

Circle reading method of the Zeiss THEO 020B theodolite

Both the horizontal and vertical angles are read simultaneously without adjustments (Figure 18). The graduation value of the reading is 1' and the estimation of the reading 10".

2.3.6. Measuring horizontal angles

An angle formed by the points APB will be indicated by the angle formed by the points A'PB' when projected on to a map (Figure 19).

All geodesy calculations are done in the horizontally-projected plane. Thus one is interested in the angle A'PB'. A theodolite is an instrument that can be used to measure angles in the horizontal plane.

As explained in Section 2.3.1, the theodolite has a telescope, rotating around the horizontal or tilting axis (called the second axis). The telescope and the second axis can rotate together around the vertical or standing axis (called the first axis) (Figure 20).

Figure 18

Reading of the angles, using a Zeiss THEO 020B theodolite

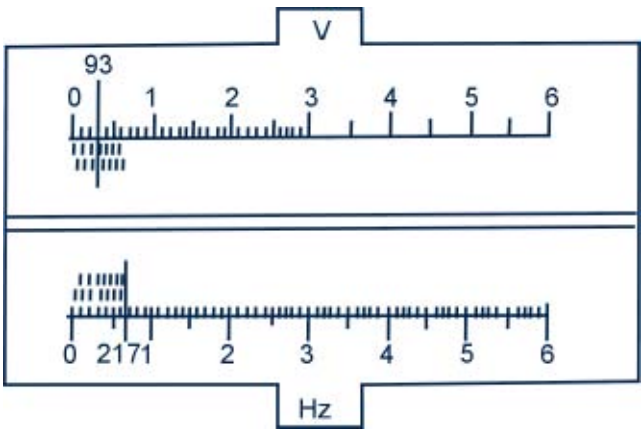

a. V = 93°03'00"

b. Hz = 217°06'20"

Figure 19

Angle projection

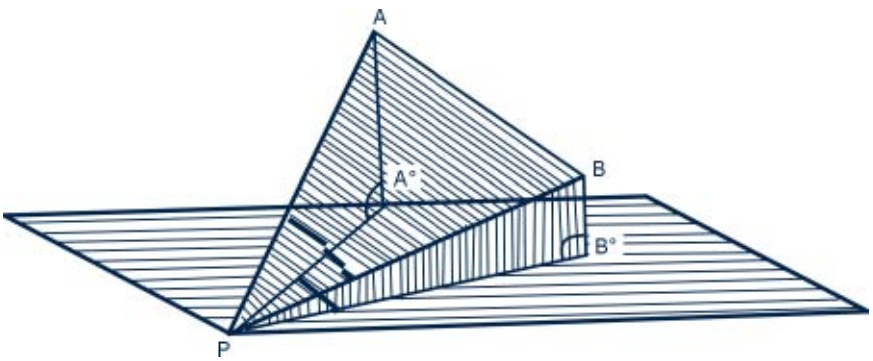

Figure 20
Principle of two axes

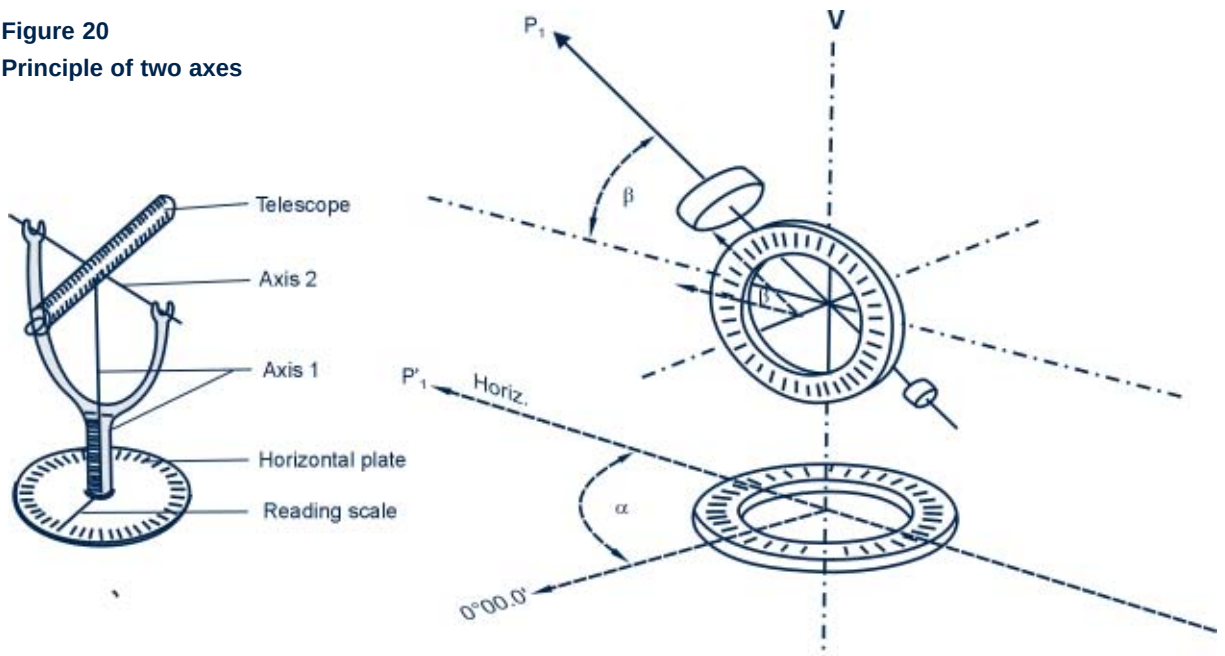

Furthermore, there is a horizontal plate with divisions in degrees, perpendicular to the first axis. A reading device or scale is connected to the first axis and rotates around it, together with the telescope and second axis, over the horizontal plate.

With the theodolite located at point P (Figure 19), it will make no difference if one shoots A or A'. Also, when turning the telescope around the vertical axis to shoot B, it does not make a difference if one shoots B or B'. In other words, when shooting points A and B, the difference between the two readings on the horizontal plate is the angle between the two horizontal projections of these points (angle at A' minus angle at B').

2.3.7. Measuring vertical angles

Besides measuring horizontal angles, theodolites are also equipped to measure vertical angles. Angles can be read from the vertical circle (Figure 21).

Figure 21
Vertical angle measurement

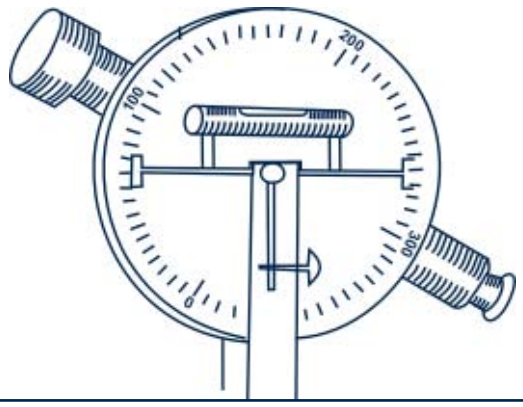

The vertical circle sits on the side of the telescope, perpendicular to the second axis and rotates with the telescope around this axis. In nearly all theodolites one reads zenith angles, which means that pointing perpendicularly upwards is 0° and horizontally is 90°.

As explained in Section 2.3.6, all points read with the theodolite are plotted on a map as the horizontal projection of these points. If a vertical angle is involved when reading a point, the horizontally projected distance from the theodolite to that point will not equal the distance of the line of sight or slope distance. The difference is larger when the vertical angle is close to 0° and smaller when the vertical angle is close to 90°.

In the particular case where, for example, a sprinkler irrigation system has to be implemented on sloping land (areas going up to 4-5% slope), the total length of the pipes to be ordered based on the distances calculated from the topographic map will be less than when calculated on the real slope distance. At the same time, friction losses will be slightly underestimated. However, by allowing contingencies on the total bill of quantities and on the total dynamic head of the system, this difference will be taken care of.

2.3.8. The stadia system

When looking through the telescope, three horizontal hairs (or lines) can be noticed (lower, middle and upper). The lower and upper hairs are called stadia lines. Stadia lines intersect the image of the staff and define a fixed angle. The distance between the hairs is fixed and is called stadia interval. When viewed through the telescope, the stadia hairs cover a certain length S on the staff. The value of S

Figure 22
The stadia system

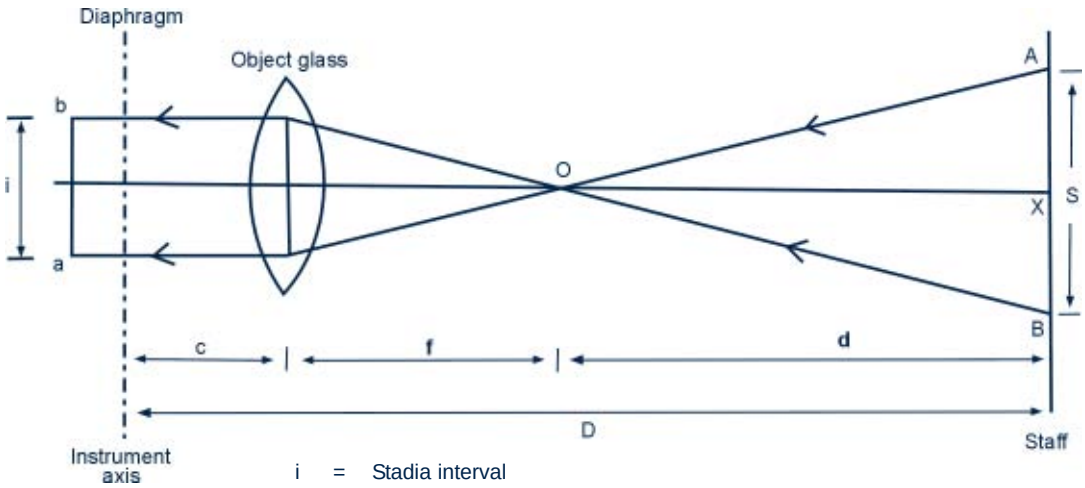

i = Stadia interval
S = Staff intercept
f = Focal length
c = Distance of object glass to instrument axis
o = Outer focal point
D = Horizontal distance from instrument to staff
d = Horizontal distance from outer focal point to staff

depends on the horizontal distance D between the instrument and the staff (Figure 22). In this case the staff is read with a horizontal line of sight.

2.3.9. Calculating horizontal distances, vertical heights and reduced levels

Horizontal distance

The horizontal distance D can be calculated from the following equations, which are derived from Figure 22.

From the similar triangles, it follows:

Equation 1

$$\frac{d}{S} = \frac{f}{i}$$

and:

Equation 2

$$d = D - (f + c)$$

Combining Equation 1 and 2 results in the following:

$$\frac{D - (f + c)}{S} = \frac{f}{i}$$

or:

$$D = \frac{f}{i} \times S + (f + c)$$

With $\frac{f}{i}$ = stadia constant K, and f + c = constant C,

the formula can be written as:

Equation 3

$$D = K \times S + C$$

For most theodolites K = 100 and C = 0, resulting in:

Equation 4

$$D = 100 \times S$$

The middle hair divides S into two equal distances, which gives the possibility of verifying the readings. A difference of 2 to 10 mm between the top and lower half intercept is acceptable, but more than 10 mm indicates an error that needs to be checked.

Obviously, multiple height differences between the staff position and the instrument will make it impossible to read the staff with a horizontal line of sight. The telescope then must be rotated over the second axis and the vertical angle recorded.

In order to calculate the horizontal distance D in such cases, the equations below have been derived from Figure 23.

Figure 23
Calculating the horizontal distance

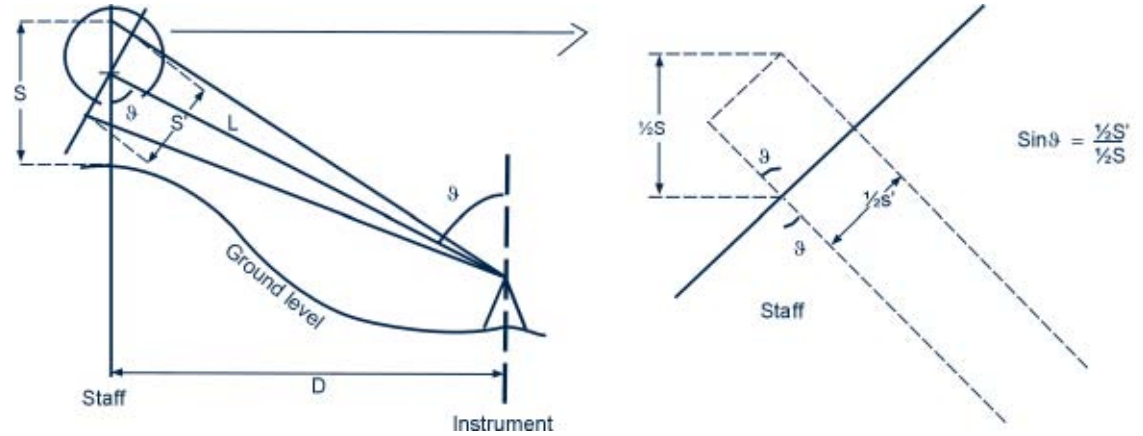

Equation 5

$$D = L \times \sin\vartheta$$

Where:

$L = 100 \times S'$

$S' = S \times \sin\vartheta$

Therefore:

$$L = 100 \times S \times \sin\vartheta$$

It should be noted, however, that this is only true when ϑ is close to 90°. It is then assumed that the upper and lower lines of sight are parallel to the middle line. Therefore: keep ϑ between 85° and 95°.

Substituting for L in Equation 5 gives:

Equation 6

$$D = 100 \times S \times \sin^2\vartheta$$

D is the reduction of the slope distance L to the required horizontal distance (Figure 23). However, Equation 6 is cumbersome for manual calculations. Therefore, for angles between 85° and 95°, where $\sin^2\vartheta$ is almost 1, Equation 6 again reads like Equation 4, or D = 100 x S. Thus, a maximum error of 0.76% is accepted (= 2 x (sin90 - sin85) x 100).

Vertical height

The reduction of the vertical angle is also needed (Figure 24).

From Figure 24 it can be derived that:

$$\tan\vartheta = \frac{D}{V} \text{ or } V = \frac{D}{\tan\vartheta}$$

Figure 24
Calculating the vertical height

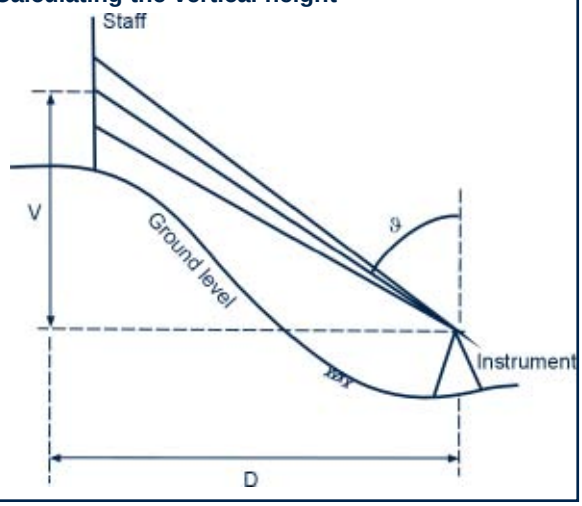

Since: $\cot\vartheta = \frac{1}{\tan\vartheta}$, therefore: $V = d \times \cot\vartheta$

Substituting $\cot\vartheta = \frac{\cos\vartheta}{\sin\vartheta}$ results in:

Equation 7

$$V = D \times \frac{\cos\vartheta}{\sin\vartheta}$$

Substituting the formula for D (Equation 6) in Equation 7 results in the following:

$$V = 100 \times S \times \sin^2\vartheta \times \frac{\cos\vartheta}{\sin\vartheta}$$

$$V = 100 \times S \times \sin\vartheta \times \cos\vartheta$$

Since: $\sin\vartheta \times \cos\vartheta = \frac{1}{2}\sin 2\vartheta$, it follows:

Equation 8

$$V = \frac{100}{2} \times S \times \sin 2\vartheta$$

Reduced level

Strictly speaking, the reduced level refers to the elevation of a point relative to the mean sea level. For example, if the elevation of a point P in relation to a benchmark is 5 m and if the reduced level of the benchmark, which is the elevation of the benchmark above the mean sea level, is 10 m, then the reduced level of P, which is the elevation of P relative to the mean sea level, is 5 + 10 = 15 m. However, in reality it is not always possible to link the elevations of the area to be surveyed to the mean sea level. This is the case when there is no point available, of which the reduced level (the elevation above sea level) is known. In that case, a fictive elevation can be given to a benchmark, for example 100 m, and the elevation of point P relative to the elevation of that benchmark can be measured. If the difference in elevation between P and the benchmark is 5 m, then the elevation (reduced level) of P is 100 + 5 = 105 m.

From Equation 8 one can derive the formula for the calculation of the reduced levels of the points related to the theodolite position (Figure 25).

The difference in height between the ground level at the theodolite position (RL_i) and the ground level at the staff position (RL_s) is represented by H and:

$$H + h = V + H_i$$

or:

Equation 9

$$H = H_i + V - h$$

Substituting for V (Equation 8) in Equation 9 gives the following:

Equation 10

$$H = \frac{100}{2} \times S \times \sin 2\vartheta + H_i - h$$

Sin 2ϑ gives a negative sign when ϑ is more than 90°, which occurs when viewing downhill. In such cases the term (100/2 x S x sin2ϑ) becomes negative.

If the reduced levels are included in Equation 10, Equation 11 results:

Equation 11

$$RL_s = RL_i + H_i \pm \frac{100}{2} \times S \times \sin 2\vartheta - h$$

Where:

RL_s	=	Reduced ground level at the staff position (m)
RL_i	=	Reduced ground level at the instrument position (m)
H_i	=	Height of the instrument (m)
S	=	Stadia hair interval or staff intercept (m)
ϑ	=	Vertical angle in degrees (°), minutes (′), seconds (″)
h	=	Middle hair reading (m)

Equation 11 holds for theodolites where the stadia constant K equals 100. If this is not the case, the correct constant K should be put, which will change the number 100/2. Equation 11 is the formula used in calculating reduced levels after a tacheometric survey.

Figure 25
Calculating the reduced level

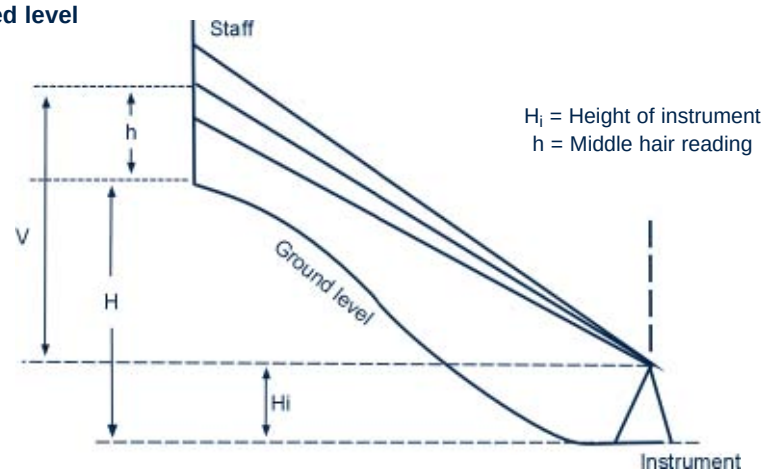

2.3.10. Accuracy

Normal theodolites have enough accuracy for all measurements needed for the preparation and implementation of irrigation schemes.

For altimetry (height measurements), goniometry (horizontal angle measurements) and telemetry (distance measurements), several sources of error have to be considered. Sources of error include the inaccuracy inherent in the instrument, the graduation of the staff, the verticality of the staff, the inclination, the distance, the mis-centering of the theodolite as well as the staff, weather conditions and the human eye.

Special attention should be given to the following:

1. *The staff reading*: if the stadia constant is 100 and the smallest graduation estimated on the staff is ± 1 mm, there will be ± 10 cm (= 100 x 1 mm) uncertainty in the horizontal distance. For distances over 100 m, the estimation of the staff intercept will not be any better than ± 5 mm, resulting in ± 50 cm of uncertainty in the horizontal distance. This is the reason why reading distances should be kept below 100 m, especially for the stations. If conditions allow, for example favourable weather, intermittent readings could go up to 150 m.
2. *Non-verticality of the staff and telescope inclination*: a combination of both can amount to a serious error. Therefore, the persons who hold the staff should be instructed to keep staffs vertical and the telescope inclination should be kept within ± 5° from the horizontal line of sight.
3. *The vertical angle*: this takes into consideration what has been described under (2) and asks for telescope inclination less than ± 5° from the horizontal line of sight. If, for example, the actual vertical angle is 85°, which is wrongly read as 84°, the reading error of 1° results in the following horizontal distance error:

   For 85°: $D = 100 \times S \times \sin^2 85 = 99.24 \times S$

   For 84°: $D = 100 \times S \times \sin^2 84 = 98.91 \times S$

   Error: $(99.24 - 98.91) \times S = 0.33 \times S$

   If the actual angle is 80° but misread as 79°, the error would increase to 0.62 x S.

   In general, it is accepted that for a distance measured by the stadia method an error of ± 0.3% will be acceptable (30 cm per 100 m) and that errors on height differences will be within ± 4 cm.
4. *The horizontal angle*: miscentering of the theodolite, too long reading distances, shimmering due to hot temperatures, miscentering the staff on top of the peg, non verticality of the staff, etc., all contribute to the angular misclosure one can experience when plotting the traverse of the benchmarks or stations. Horizontal angular misclosure will be discussed in detail in Section 2.5.3.

2.4. The level

Level instruments are available in many different models with different features, accuracy, etc. Two types commonly used to take the elevation readings of points in the field are the tilting level (Figure 26a) and the automatic level (Figure 27a). The main difference between the two types is the tilting screw of the tilting level. This tilting screw is used for horizontal adjustments of the instrument to ensure that there is a horizontal line of sight. The automatic level has an automatic compensator, which is a mechanism that automatically gives a horizontal line of sight because of the gravitational force on the compensator.

If the level instruments have horizontal circles one could set out horizontal angles without resorting to the theodolite or, in the case of right angles, to prismatic squares. Thus, such level instruments could be used to set out the grid. From the above it can be concluded that the tilting level is more laborious to use than the automatic level, and is therefore becoming less popular.

After mounting either of the instruments on a tripod, one has to exactly centre the bubble of the circular level with the levelling screws (Figure 27b and Figure 14). Two levelling screws are turned at the same time. The one nearest to the circular level should be turned anti-clockwise and the opposite one should be turned clockwise. When centered, the vertical line of the instrument is actually vertical. The automatic level is now ready for use. The tilting level still needs horizontal adjustment. Looking through the telescope eyepiece the coincidence reading level appears on the left of the field of view (Figure 26b). To centre the level one has to coincide the tips of the split bubble with the tilting screw. Now the tilting level is also ready for use.

2.5. Tacheometric survey

Tacheometry stands for the Greek word meaning 'fast measure'. 'Fast' because heights and distances between the ground marks are obtained by optical means only, as such eliminating the slower process of measuring by tape.

The instrument used for tacheometric surveys is the theodolite, which has been described in Section 2.3. The following sections describe the sequential procedure of carrying out tacheometric surveys.

Figure 26
Tilting level (Source: Kern & Co, undated)

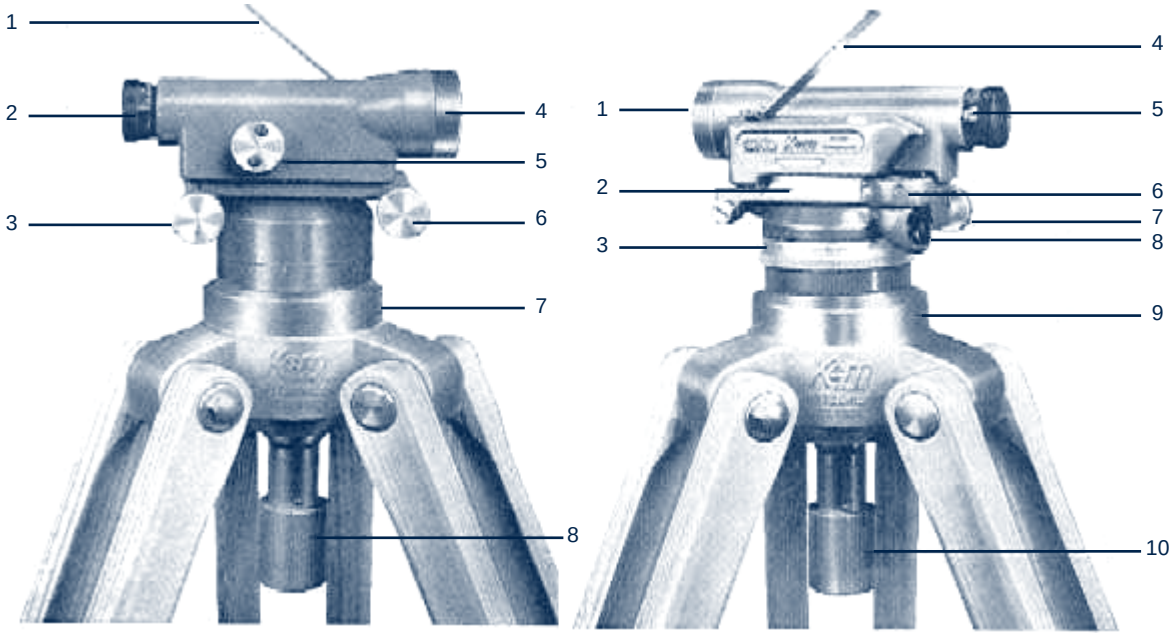

a. Components

1. Spirit level mirror
2. Telescope eyepiece with diopter scale
3. Tilting screw
4. Telescope objective
5. Focussing knob
6. Horizontal slow motion screw
7. Tripod head
8. Fastening screw

1. Telescope objective
2. Reflecting surface
3. Horizontal circle
4. Spirit level mirror
5. Telescope eyepiece with diopter scale
6. Circular level
7. Tilting screw
8. Circle reading magnifier
9. Tripod head
10. Fastening screw

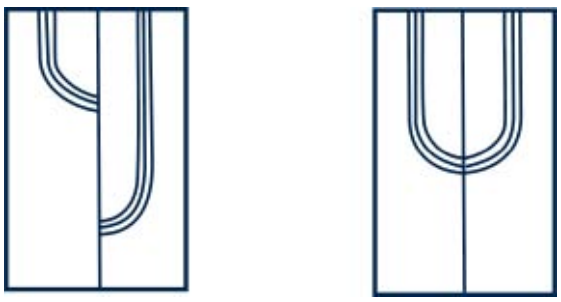

Not centered Centered

b. Coincidence bubble of a tilting level

Figure 27
Automatic level (Source: Leica, undated)

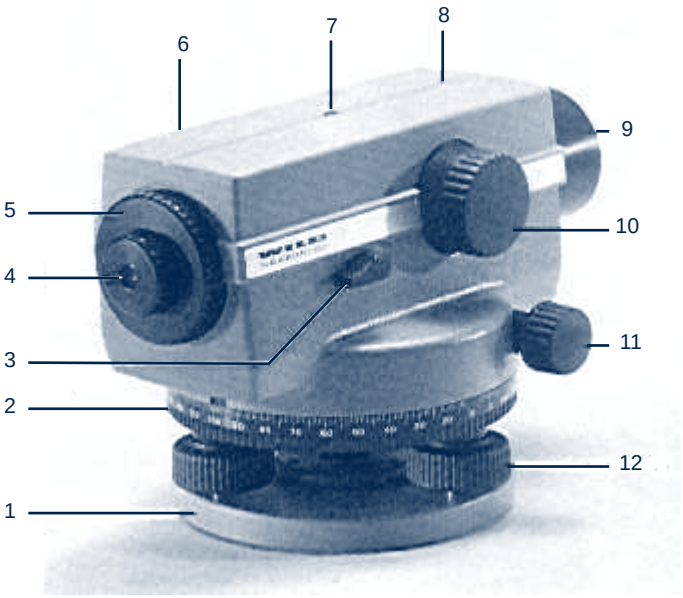

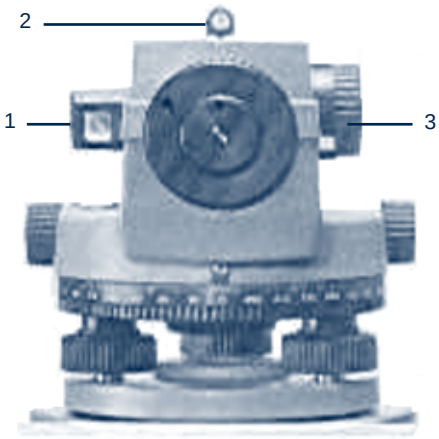

a. Components

1. Base plate
2. Horizontal circle
3. Functioning control
4. Eyepiece
5. Adjusting screw cover
6. Circular level
7. Centering point
8. Peep sight
9. Objective
10. Focussing knob
11. Fine motion adjustment screw
12. Levelling screw

1. Observation prism of circular level
2. Peep sight
3. Focussing knob

b. Centering circular bubble of an automatic level

2.5.1. The reconnaissance survey

The reconnaissance survey is one of the most important aspects of any surveying operation and must always be undertaken before any angles or distances are measured. The aim of the reconnaissance survey is to familiarize oneself with the area and to locate suitable positions for stations. Often people neglect this process, leading to wasted time and inaccurate work later. An overall picture of the area is obtained by walking all over the site, even more than once. If plans or maps of the area (or aerial photographs) exist, these should be consulted. Stations should be set out such that each of them can be shot from as many other stations as possible, while sufficient survey detail can be obtained from them. The maximum shooting distance should not exceed 100 m and the distances between stations should be, as much as possible, approximately equal. For most sites, a polygon traverse is usually sited around the perimeter of the area at points of maximum visibility (Figure 28).

The stations should be located on firm, level ground so that the theodolite and tripod are supported adequately. It is a good habit to draw a sketch of the traverse more or less to scale. The stations should be labelled with reference letters or numbers. Always indicate clearly the position of a station, as in pasture for example, it can be difficult to relocate them even after only a few hours.

2.5.2. Station marking

After the reconnaissance survey, stations have to be marked. The marks must be semi-permanent or permanent (usually cast in concrete), not easily moved, and clearly visible.

For intermediate stations, wooden pegs are used, which are hammered into the ground until the top of the peg is almost even with the ground level. If it is not possible to drive the whole length of the peg into hard ground the, excess above the ground should be sawn off. Too long pegs are often easily knocked off.

More permanent stations require marks set in concrete and labelling in white paint. It is good practice to make a sketch of all the benchmarks or stations on a traverse in order to check if the traverse can close.

2.5.3. The actual survey

The position of a point on the ground can be established if its angle and distance from another already established point are measured. During the actual survey this process is extended to successive stations. The resulting series of connected lines, of which the angle and distance are known, is called a traverse. Traverse surveying is a method of control surveying, used to determine the horizontal points or rectangular coordinates of control points. There are two types of traverses:

- **Open traverse**: a traverse that does not close on a known point. Such a traverse cannot be checked and should therefore be avoided
- **Closed traverse**: a traverse that starts from one coordinated point and closes on another coordinated point or on its starting point, forming a polygon (Figure 28)

Figure 28
A closed traverse or polygon

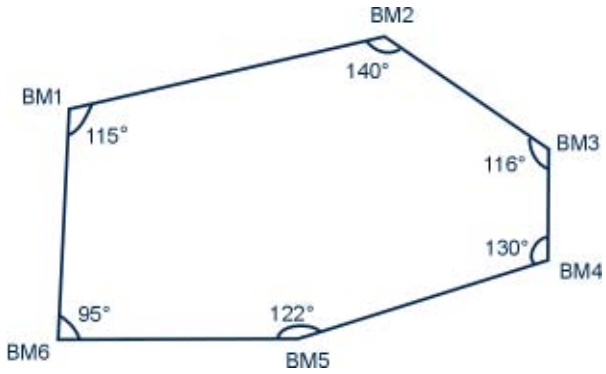

The station angles and distances should be recorded in the survey notebook. It is important that each round of observations from a station is completed by closing back to the initial point sighted (see the example in Table 2). The first and last reading should be compared to verify that the position of the theodolite has not changed. After the traverse survey, the data of the traverse stations should be plotted and the correctness checked. Using the 360° graduation, a simple field calculation to check on the correctness of the horizontal angles is as follows:

– The sum of the internal angles α of a closed traverse is: $\Sigma\alpha = (2 \times n - 4) \times 90°$

– The sum of the external angles φ of a closed traverse is: $\Sigma\varphi = (2 \times n + 4) \times 90°$

Where n is the number of stations.

As an example, the angular misclosure of the traverse in Figure 28 is checked. The sum of the surveyed angles in the figure is 718° and the number of angles is 6. Using the equation for the internal angles:

$\Sigma\alpha = (2 \times 6 - 4) \times 90° = 720°$, thus the angular misclosure is 2°

The allowable misclosure, E, can be calculated as follows:

Equation 12

$$E = S \times \sqrt{n}$$

Where:

E = Allowable misclosure

n = Number of traverse stations

S = Smallest reading interval on the theodolite (")

The smallest reading interval on the theodolite is 10", thus the allowable misclosure is:

$$E = 10'' \times \sqrt{6} = 24''$$

The allowable misclosure being 24", it can be concluded that the misclosure of 2° is not acceptable.

When the readings are within the allowable error, the difference between observed and calculated values is divided equally between angles, i.e. added to (in case of negative angular misclosure) or subtracted from each of the observed angles.

Only when the traverse survey is in order should the intermittent readings begin to be taken. The theodolite is again set up over a station and all necessary readings are taken, including the neighbouring stations and the points in the selected spacing. Where applicable, the survey should also include the reading of special features (graves, anthills, etc.), existing infrastructure (roads, canals or pipe layouts), water sources, etc.

2.5.4. Data processing

Once all the fieldwork is finished, reduced levels and distances and coordinates have to be calculated, and distances and angles plotted.

For those who have access to computers, software is available to facilitate and speed up the process of reducing and plotting. However, even when using computer software to calculate reduced levels and to plot topographic maps, it is still good practice to plot by hand the positions of the stations used for the traverse so that any angular mis-closure can be detected in time. Normally this should been done in the field to avoid detecting errors back at the office, which would require returning to the project area.

Since often people in the field or in remote areas have no computer facilities, all computations have to be done manually, with the help of a pocket calculator. For this, in the sections below the manual data processing is explained more in detail.

Although all the calculations explained below can be done with any calculator, it can be a laborious exercise. Therefore, programmable calculators can be very useful. Examples of simple programmes to calculate distances and reduced levels are given in Annex 1 at the end of this chapter for Hewlett Packard HP15C, HP42S and Texas Instruments T1-60 calculators.

Calculation of reduced levels and distances

For each point read with the theodolite, the reduced level is calculated with Equation 11 and the horizontal distance with Equation 6. If the line of sight is nearly horizontal, Equation 4 can be used instead of Equation 6.

Calculation of coordinates

During the survey, horizontal angles (α or φ) and distances (D) are read. With this information the coordinates of a Point P (X_P, Y_P) can be calculated. The coordinates of a point give the relative position of that point to x and y-axes (Figure 29). In the field angles are read, but for the calculation of the coordinates the bearing (β) is required, which is an angle related to a fixed axis system (Figure 29).

Figure 29
Coordinates of point P

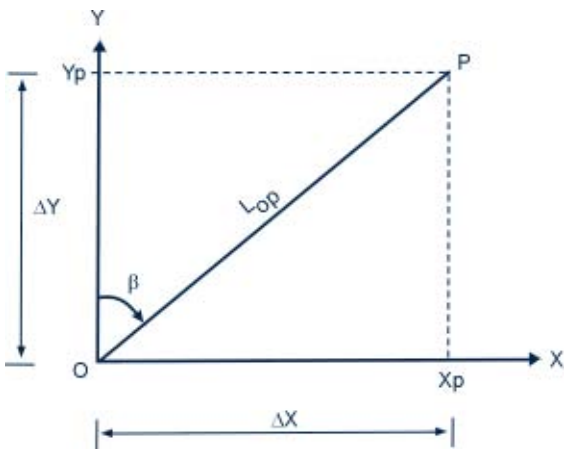

The coordinates X_P and Y_P from Figure 29 can be calculated using the following equations:

Equation 13

$$X_P = L_{OP} \times \sin\beta$$

and:

Equation 14

$$Y_P = L_{OP} \times \cos\beta$$

Where:

X_P	=	x-coordinate of point P (m)
Y_P	=	y-coordinate of point P (m)
L_{OP}	=	Distance of point P from the origin O or the length of the straight line OP (m)
β	=	Bearing or angle of OP relative to the y-axis

L_{OP} and β are obtained from field measurements using the theodolite.

As discussed earlier, it is rare that the whole field can be surveyed from one station. Thus a traverse has to be made (Figure 30). The starting point will be station O. The zero reading is set to the north if there is a compass, otherwise it can be set to any direction, which from then onwards will coincide with one of the axes, normally the y-axis, during future plotting. The angle reading to station P, β_{OP} is also the bearing of point P from O. This bearing is used to determine the coordinates of point P, as illustrated in Figure 30.

The instrument is then moved to station P and read back to station O. This can be done by carrying the bearing (Section 2.3.3) or the return view can be made 0°. The latter method makes it a bit easier to calculate the bearing, but there is less possibility to check possible errors. After viewing back, the angle between the legs PO and PQ, is read. This could be either the external angle φ or the internal angle α of the polygon, but once one of them has been chosen, the same angle (either external or internal) should be followed throughout the actual survey to avoid confusion.

From the above, the coordinates for point P can be calculated since the bearing β_{OP} is known. The next step is to find the bearing P to Q or β_{PQ}. From Figure 30 it follows that:

Equation 15

$$\beta_{PO} = \beta_{OP} + 180°$$

Equation 16

$$\beta_{PQ} = \beta_{PO} + \varphi_P$$

These equations can be used for the calculation of the bearing for every station. Note that external angles of the polygon should be used, since that was the direction chosen (see above). Figure 31 shows a case where the internal angles of the polygon are read.

Figure 30
Bearings for part of a traverse

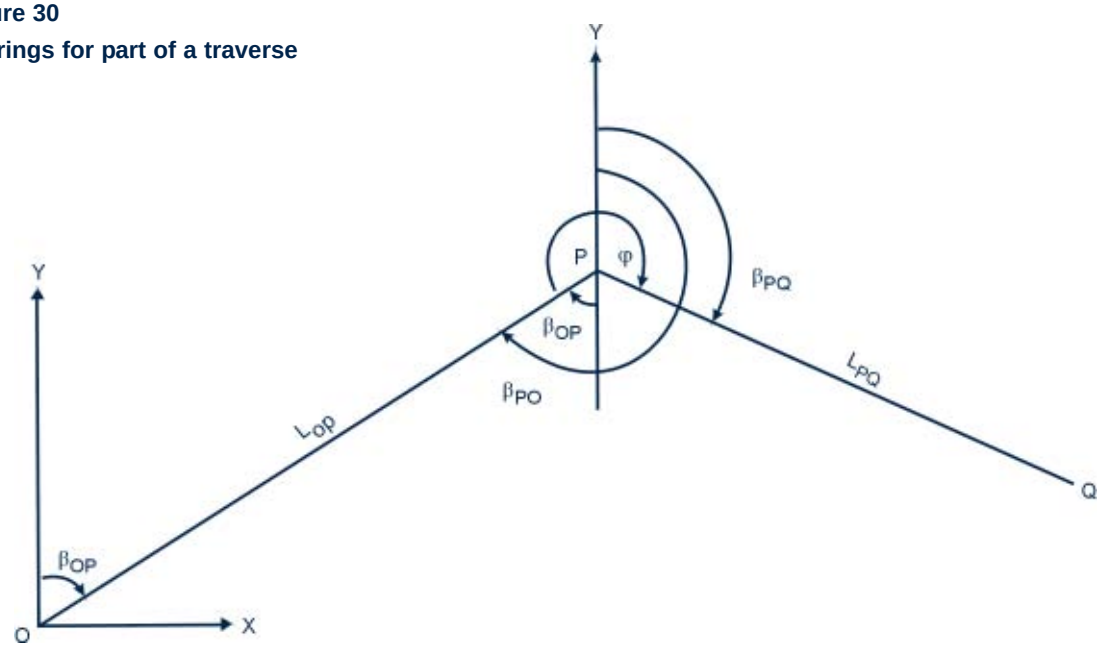

Figure 31
Traverse with read internal angles, using the 360° graduation (not to scale)

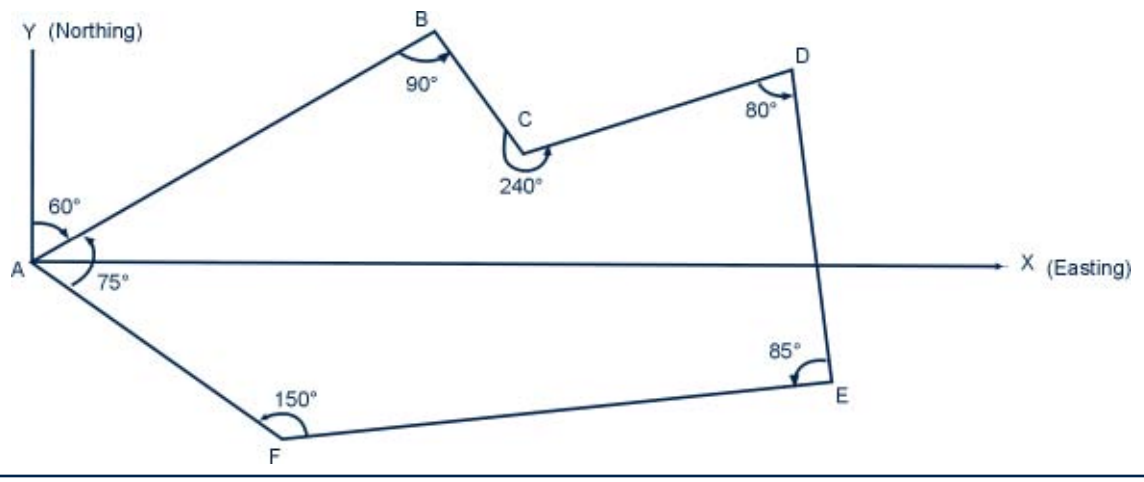

Example 1

Figure 31 shows a traverse for which the internal angles were read. Calculate the bearings at each point.

The external angles can be calculated as follows:

external angle φ = 360° - internal angle α

The bearing from A to B is read in the field as β_{AB} = 60°

The bearing from B to A is calculated as follows: $\beta_{BA} = \beta_{AB} + 180° = 60° + 180° = 240°$

The bearing from B to C is calculated using Equation 16 as follows: $\beta_{BC} = \beta_{BA} + \varphi_B$

Therefore:

$\beta_{BC} = 240° + (360° - 90°) = 510°$

If, at any time in the process of computation, the value of a bearing calculated is greater than 360º, the appropriate multiple of 360º should be subtracted from it. Similarly, if the values turn out to be negative the appropriate multiple of 360° should be added.

Thus, the corrected value of β_{BC} will then become:

$\beta_{BC} = 510° - 360° = 150°$

Similarly, bearings at all the remaining stations can be calculated using these basic principles:

Bearing of C to D: $\beta_{CD} = \beta_{CB} + \varphi_C = \beta_{BC} + 180° + \varphi_C$
$\beta_{CD} = 150° + 180° + (360° - 240°) = 450° - 360° = 90°$

Bearing of D to E: $\beta_{DE} = \beta_{DC} + \varphi_D = \beta_{CD} + 180° + \varphi_D$
$\beta_{DE} = 90° + 180° + (360° - 80°) = 550° - 360° = 190°$

Bearing of E to F: $\beta_{EF} = \beta_{ED} + \varphi_E = \beta_{DE} + 180° + \varphi_E$
$\beta_{EF} = 190° + 180° + (360° - 85°) = 645° - 360° = 285°$

Bearing of F to A: $\beta_{FA} = \beta_{FE} + \varphi_F = \beta_{EF} + 180° + \varphi_F$
$\beta_{FA} = 285° + 185° + (360° - 150°) = 675° - 360° = 315°$

There is a need to check the correctness of the calculated bearings by recalculating the bearing of A to B.

Bearing of A to B: $\beta_{AB} = \beta_{AF} + \varphi_A = \beta_{FA} + 180° + \varphi_A$
$\beta_{AB} = 315° + 180° + (360° - 75°) = 780° - 360° = 420° - 360° = 60°$, which is correct.

Figure 32
Part of traverse and coordinates (not to scale)

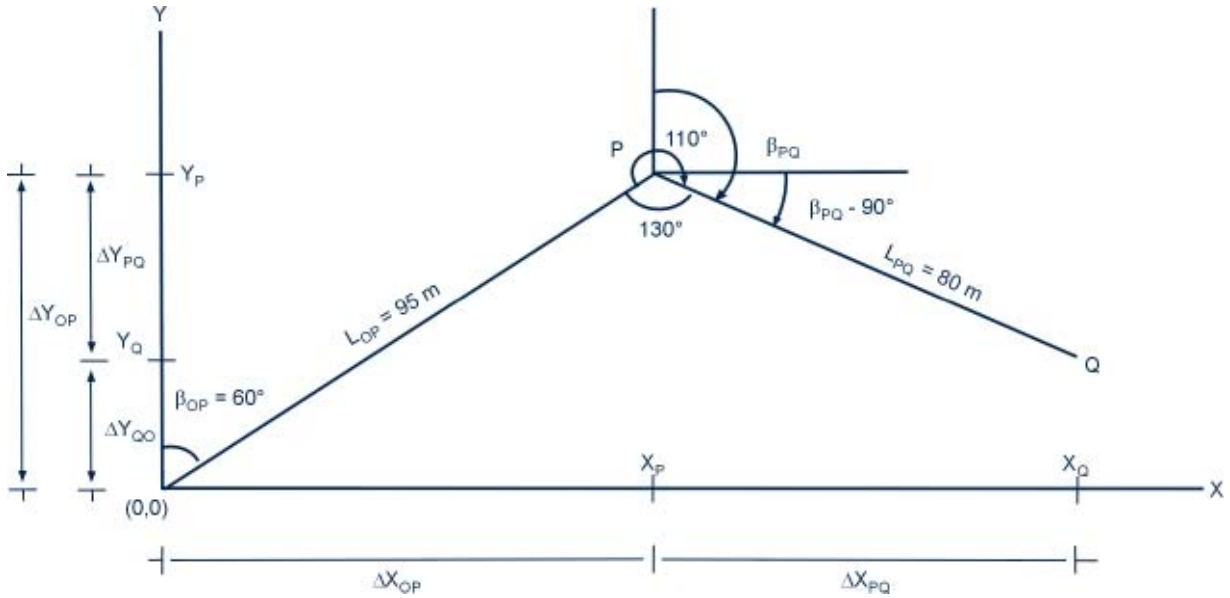

After the bearings have been calculated, the coordinates can be determined using the measured distances between points and the calculated bearings (see also Figure 30).

Figure 32 shows again part of a traverse.

The bearing β_{OP} and the coordinates of point O are known. These data are the starting point for the calculation of the coordinates of point P (X_P, Y_P).

Equation 17

$$X_P = X_O + \Delta X_{OP}$$

Equation 18

$$Y_P = Y_O + \Delta Y_{OP}$$

Where:

X_P	=	x-coordinate of point P (m)
Y_P	=	y-coordinate of point P (m)
X_O	=	x-coordinate of the starting point (first station) (m)
Y_O	=	y-coordinate of the starting point (first station) (m)
ΔX_{OP}	=	$L_{OP} \times \sin\beta_{OP}$ (Equation 13)
ΔY_{OP}	=	$L_{OP} \times \cos\beta_{OP}$ (Equation 14)

Substituting for ΔX_{OP} in Equation 17 and for ΔY_{OP} in Equation 18 results in:

Equation 19

$$X_P = X_O + L_{OP} \times \sin\beta_{OP}$$

Equation 20

$$Y_P = Y_O + L_{OP} \times \cos\beta_{OP}$$

The X and Y coordinates of station P in Figure 32 thus become:

$$X_P = 0.0 + 95 \times \sin 60° = 82.3 \text{ m}$$
$$Y_P = 0.0 + 95 \times \cos 60° = 47.5 \text{ m}$$

Before the coordinates of point Q can be determined, the bearing β_{PQ} has to be calculated in the same manner as was shown in Example 1, which gives:

Bearing of P to Q:

$$\beta_{PQ} = \beta_{PO} + \varphi_P = \beta_{OP} + 180° + \varphi_P$$
$$= 60° + 180° + (360° - 130°)$$
$$= 110°$$

From Figure 32 it follows that:

$$\Delta X_{PQ} = L_{PQ} \times \cos(\beta_{PQ} - 90°)$$
$$= L_{PQ} \times \sin\beta_{PQ}, \text{ which is Equation 13}$$
$$\Delta Y_{PQ} = -L_{PQ} \times \sin(\beta_{PQ} - 90°)$$
$$= L_{PQ} \times \cos\beta_{PQ}, \text{ which is Equation 14}$$

Thus Equation 13 and 14 are valid for any bearing.

Thus:

$$X_Q = X_P + \Delta X_{PQ} = X_P + L_{PQ} \times \sin\beta_{PQ}$$
$$= 82.3 + 80 \times \sin 110°$$
$$= 157.5 \text{ m}$$
$$Y_Q = Y_P + \Delta Y_{PQ} = Y_P + L_{PQ} \times \cos\beta_{PQ}$$
$$= 47.5 + 80 \times \cos 110°$$
$$= 20.1\text{m}$$

The above calculations can easily be made with a simple spreadsheet in, for example, Excel. Table 3 shows the layout of a spreadsheet programme that can be used to do the calculations.

The required input data for the spreadsheet are:

- The total number of stations (column 1)
- The station numbers (column 2)
- The internal angles α or external angles φ between the traverse legs (column 3)
- The bearing β of the station 1 (column 4)
- The length of traverse legs (column 5)
- The coordinates of the first station (X_1 in column 10 and Y_1 in column 11)

It is possible to check the errors in the angles of the stations, using the spreadsheet, by simply adding them up to see if the sum conforms with the theoretical sum of (2 x n - 4) x 90° for internal angles or (2 x n + 4) x 90° for external angles, to be put as a formulae in the spreadsheet. If the difference in the sum of the measured angles of a closed traverse and the theoretical sum, $\delta\alpha$ or $\delta\varphi$, is acceptable it is distributed equally over the number of stations.

The spreadsheet automatically calculates the coordinates X and Y of all stations in the traverse through the formulae put in the different columns.

It also calculates closing errors δX and δY in the X and Y directions with the formula in the last row of the spreadsheet. The closing error in the coordinates is the difference between the initial coordinates of the first station and the calculated coordinates of the same station. These closing errors are input for the calculation of the linear misclosure.

Equation 21

$$\text{Linear misclosure} = \frac{\sqrt{\delta X^2 + \delta Y^2}}{\Sigma L}$$

Where:

δX = Closing error in the X direction = $\Sigma\Delta X$ (m)

δY = Closing error in the Y direction = $\Sigma\Delta Y$ (m)

L = Length of a traverse leg (m)

The value of the linear misclosure is an indicator for the accuracy of the measurement of the traverse. For sprinkler irrigation systems, the recommended value should be less than 0.002 (1/500), while for surface irrigation it should be less than 0.0005 (1/2000). If the linear misclosure is acceptable, then the closing errors δX and δY are distributed proportionally to the lengths of the different legs of the traverse, using the following formulae for the x and y coordinates:

Equation 22

$$ADJ_{\Delta X} = \delta X \times \frac{L}{\Sigma L}$$

Equation 23

$$ADJ_{\Delta Y} = \delta Y \times \frac{L}{\Sigma L}$$

Where:

$ADJ_{\Delta X}$ = Factor with which ΔX needs to be adjusted

$ADJ_{\Delta Y}$ = Factor with which ΔY needs to be adjusted

δX = $\Sigma\Delta X$

Figure 33
Traverse of four stations and calculation of coordinates

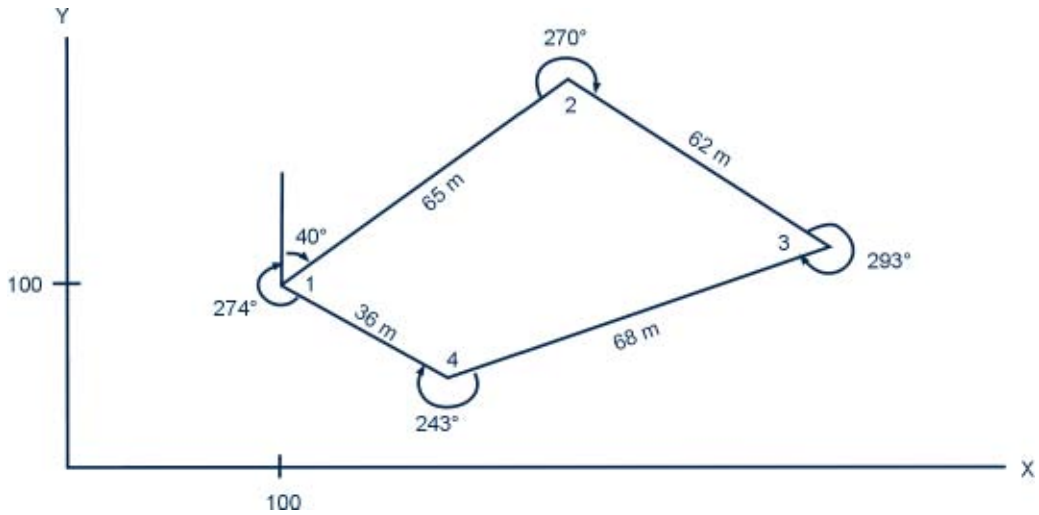

Example 2

Figure 33 shows a traverse of four stations. The bearing β of station 1, the external angles φ of all stations and the distances between subsequent stations L have been surveyed. The coordinates of station 1 are chosen as being (100.00,100.00). What are the coordinates of the other three stations?

Table 4 shows the spreadsheet that has been filled in as follows:

- The number of stations is 4 (column 1)
- The external angles φ have been measured in the field and are recorded in the spreadsheet (column 3)
- The bearing of the point of origin β_{12} has to be fixed in the field and is recorded in the spreadsheet, the other bearings can be calculated using the formulae put in the spreadsheet (column 4)
- The lengths of the traverse legs L are calculated after the measurements and recorded in the spreadsheet (column 5)
- ΔX and ΔY are calculated using the formulae put in the spreadsheet (column 6 and 8). The closing errors and the linear misclosure are calculated using the formulae put in the last row. Since the linear misclosure of 0.0021 is acceptable in this case, the ΔX and ΔY can be adjusted using Equation 22 and 23 (column 7 and 9). For example, ΔX_{12} should be adjusted with:

  $$0.44 \times \frac{65}{231} = +0.12 \text{ m}$$

- Finally, the co-ordinates of different stations are calculated using the formulae put in the spreadsheet (column 10 and 11).

δY	=	ΣΔY
L	=	Length of traverse leg for which DX or DY have been calculated
ΣL	=	Sum of all traverse leg lengths

If the value of δX or δY is negative, then ΔX or ΔY should be increased in order to eliminate the error, thus the values of $ADJ_{\Delta X}$ or $ADJ_{\Delta Y}$ are positive. If the value of δX or δY is positive, then ΔX or ΔY should be decreased in order to eliminate the error, thus the values of $ADJ_{\Delta X}$ or $ADJ_{\Delta Y}$ are negative.

2.5.5. Plotting

Map scale

A suitable scale for a topographic plan may be 1: 500 to 1: 2 000 or smaller, depending on the size of the area under survey and the amount of detail required. The scale of 1:500 or 1:2 000 can be read as 1 cm on the map is equal to 500 cm in the field or 1 cm on the map is equal to 2 000 cm in the field respectively. It is important to use the same units for the map and the field and only convert to the required units once a calculation is completed. The scale of a map is the ratio between distances on the map and actual distances on the ground. For example, 3.4 cm on a map with a scale of 1 : 2 000 means an actual distance in the field of 3.4 x 2 000 = 6 800 cm = 68.00 m.

Plotting the survey data

Traverses and points can be plotted directly from observed angles and calculated distances. This is done with a protractor. A protractor is a semicircular instrument with graduated markings that is used to construct and measure angles. The centre of the protractor is placed on a station position such that the observed horizontal angle reading to a known point (usually the previous station) coincides with the same angle reading on the protractor (Figure 34). Keeping the protractor in place, all other horizontal angles and distances are plotted, using a ruler for the distances. This plotting includes all stations, intermediate points and special feature points. The advantage of this method is that it is quick and simple. The disadvantage, however, is that the method is not very accurate in plotting the angles.

The surveyed points can also be plotted using the calculated coordinates. For each point the X and Y coordinates are plotted in a coordinate system. The advantage of this method is that adjustments are possible before plotting, as explained earlier, thus this method is accurate. The disadvantage of the coordinate method is that manual calculation of the coordinates is laborious.

The importance of indicative remarks, noted in the field for each point, becomes clear here. Remarks like anthill, contour ridge, field edge, corner, tree, road, gullies are of great help to reproduce a close to reality map of the area.

Table 3

Layout of spreadsheet for calculating coordinates using 360° graduation)

No. of stations	Station number	Angle [a] (°)	Bearing β (°)	Length L (m)	ΔX (m)	$ADJ_{\Delta X}$ (m)	ΔY (m)	$ADJ_{\Delta Y}$ (m)	X (m)	Y (m)	Station number
(1)	(2)	(3)	(4)	(5)	(6)	(7)	(8)	(9)	(10)	(11)	(12)
Z											
	1	α_1 or φ_1							X_1 =known	Y_1 =known	1
			β_{12} = read	L = measured	ΔX = (5)xsin(4)	($ADJ_{\Delta X}$ = (15)x(5) / (14)	ΔY = (5)xcos(4)	$ADJ_{\Delta Y}$ = (16)x(5) / (14)			
	2	α_2 or φ_2							X_2 = X_1+ (6)+(7)	Y_2 = Y_1 (8)+(9)	2
			β_{23} = β_{12}+180+φ_2= β_{12}+180+(3)[b]								
	3	α_3 or φ_3									
	Z										
	1										
		Sum of angles ↓		Sum of lengths (14) ↓	Closing error (15) ↓		Closing error (16) ↓		Linear misclosure ↓		
		Σα or Σφ Should be ↓		ΣL	δX = ΣΔX		δY = ΣΔY		$\frac{\sqrt{\delta X^2 + \delta Y^2}}{\Sigma L}$		
		(13)[c]									
		Error δα or δφ ↓									
		(13) - Σα or - Σφ									

(a) α = internal angle; φ = external angle. φ = 360° - α

(b) If the external angle φ is measured, then the value in of column (3) can be used as such for the calculation of column (4). If the internal angle α is measured and recorded in column (3), then the value of 360° minus the value of column (3) should be used for the calculation of column (4), since φ = 360° - α.

(c) The sum of internal angles α = (2 x n - 4) x 90° or the sum of external angles φ = (2 x n + 4) x 90°, whereby n = number of stations.

Table 4

Calculation of station coordinates using a spreadsheet (using 360° graduation)

No. of stations	Station number	Angle φ (°)	Bearing β (°)	Length L (m)	ΔX (m)	$ADJ_{\Delta X}$ (m)	ΔY (m)	$ADJ_{\Delta Y}$ (m)	X (m)	Y (m)	Station number
(1)	(2)	(3)	(4)	(5)	(6)	(7)	(8)	(9)	(10)	(11)	(12)
4											
	1	274							100.00	100.00	1
			40	65	+41.78	+0.12	+49.79	-0.06			
	2	270							141.90	149.73	2
			130	62	+47.49	+0.12	-39.85	-0.06			
	3	293							189.51	109.82	3
			243	68	-60.59	+0.13	-30.87	-0.07			
	4	243							129.05	78.88	4
			306	36	-29.12	+0.07	+21.16	-0.04			
	1	274							100.00	100.00	1
		Sum of angles φ(1-4) ↓		Sum of lengths ↓	Closing error ↓		Closing error ↓		Linear misclosure ↓		
		1 080 Should be ↓ 1 080 Error δφ ↓ 0		231	-0.44		+0.23		0.0021		

Figure 34
Plotting with a protractor

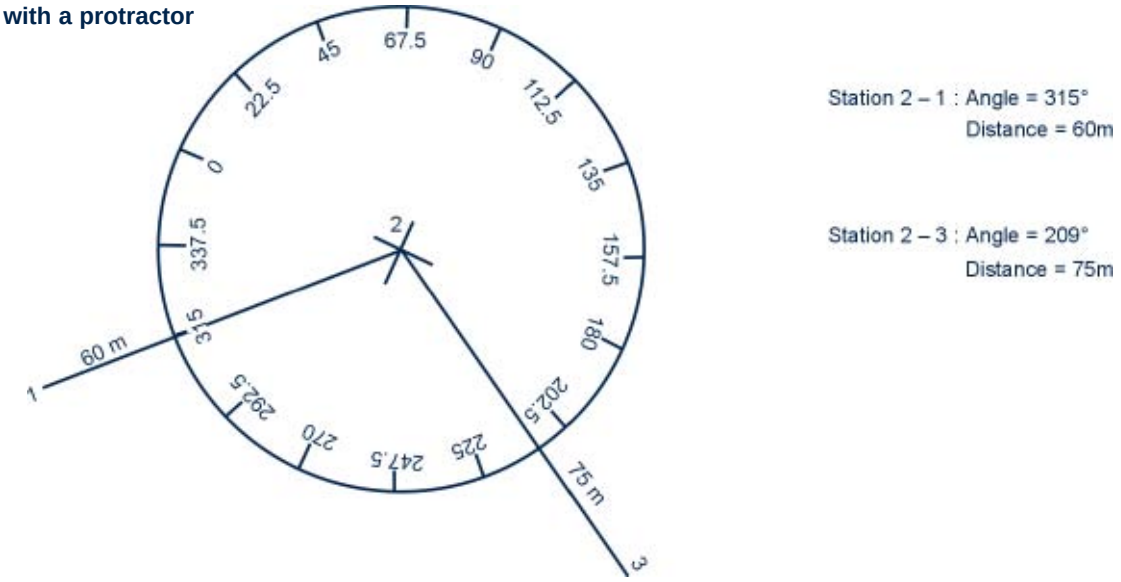

The remarks should be noted on the map. Also should be put:

1. All BMs and TBMs, their elevation and description
2. Water sources and the elevation of the water levels

Tracing the contour lines

Contour lines are traced by interpolating for every 1 m or 0.5 m of height difference, depending on the requirements. For example, the contour map for a proposed sprinkler scheme does not have to be as accurate as one for a surface scheme. Therefore, an interval of 1 m could be chosen. Interpolation by eye is a rather rough method. The graphical interpolation is preferred and is explained below:

- A piece of transparent tracing paper is prepared with a series of equally spaced and scaled horizontal lines, as shown in Figure 35. Every tenth line is drawn heavier than the others
- The tracing paper is then laid between pairs of spot heights and is rotated until the horizontal lines correspond to the known spot height values of the points (Figure 35)

Figure 35
Interpolation between two reduced level points using graph paper

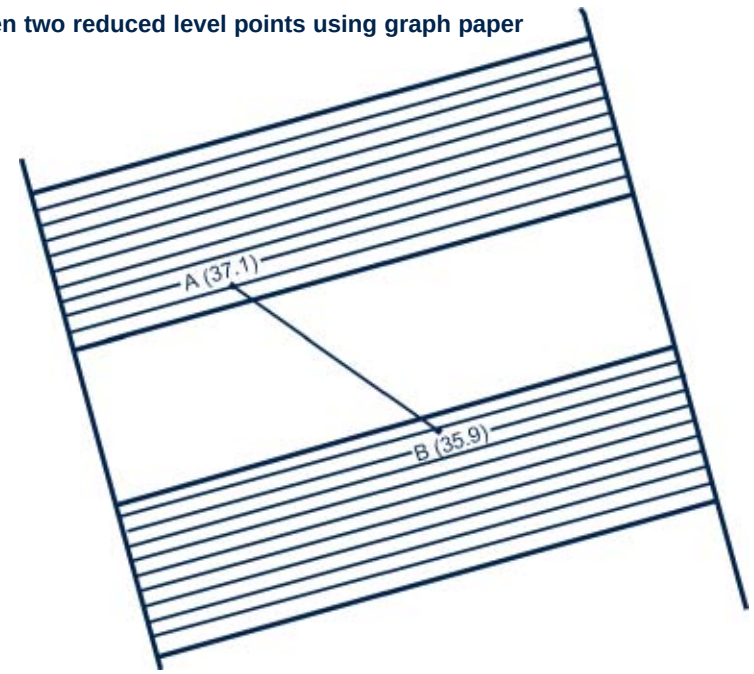

- The heavy lines indicate the positions of the contour lines where they pass over the line joining the spot heights and these positions are pricked through on to the drawing paper
- The reduced levels (elevations) of all pricked points are written down and all points with the same elevation are joined by smooth curves. For example, all pricked points marked 99.0 are joined

As a rule, contours of different elevation do not unite. They can exceptionally unite to form one line or cross in the case of a vertical or overhanging cliff. At steep cliffs the lines would have to be drawn so close together that they become illegible. Furthermore, a single contour line can not split into two lines of the same elevation.

Contour maps can also be generated with the automatic computer aided design (AutoCAD) programmes, where it is available.

2.5.6. Checking the theodolite

Theodolites should be checked regularly before they are taken into the field. Some simple checking procedures on the theodolite are explained here. The nomenclature used in the text can be related to Figures 12 and 13. If none of the adjustments discussed in the next sections correct the problem, the instrument should be checked by a qualified repair technician.

Adjustment of an inclined vertical reticle line

If the vertical reticle line (hair) is out of plump, inaccurate readings will result. It is therefore necessary to check the vertical adjustment (Figure 36):

1. Select a clear target and after sighting in the usual way, use the horizontal fine motion screw to position the vertical reticle line exactly on target A.
2. Raise the telescope slightly with the vertical fine motion screw to position the target between the double vertical lines.
3. If the target is off-centre, remove the reticle adjustment cover. Place a small piece of plastic or wood to one side of the capstan screw as a buffer, look through the eyepiece and tap the screw gently to position the target at B. The vertical reticle line is now true.

Horizontal adjustment of the vertical reticle line (360° graduation)

The difference between Face Left and Face Right readings should be exactly 180°. Any slight discrepancy is caused by a lateral shift of the reticle in relation to the optical alignment of the telescope. It is, therefore, necessary to check the difference between Face Left and Face Right readings (Figures 37 and 38):

1. Select a clear target at a horizontal distance of more than 10 m.
2. Read the horizontal angle at Face Left, for example a = 18°34'00"
3. Take a second reading of the same target at Face Right (turn both horizontal and vertical axes 180°), for example b = 198° 34' 40".
4. The difference between Face Right and Left angle readings is 180° 00' 40". The 40" in excess of the required difference has to be eliminated.

   Use the formula: $b + \frac{a - b \pm 180°}{2}$

   to obtain the Face Right reading required, reduce the excess 40" by half. In the formula a = Face Left angle reading and b = Face Right angle reading.

   $$198° \; 34' \; 40'' + \frac{18° \; 34' \; 00'' - 198° \; 34' \; 40'' + 180°}{2}$$

   $$= 198° \; 34' \; 20''$$

Figure 36
Adjustment of an inclined vertical reticle line

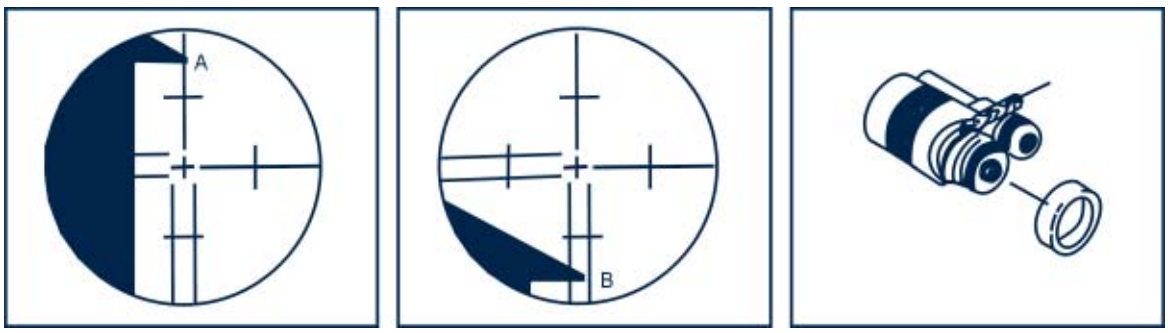

Figure 37
Face Left and Face Right readings

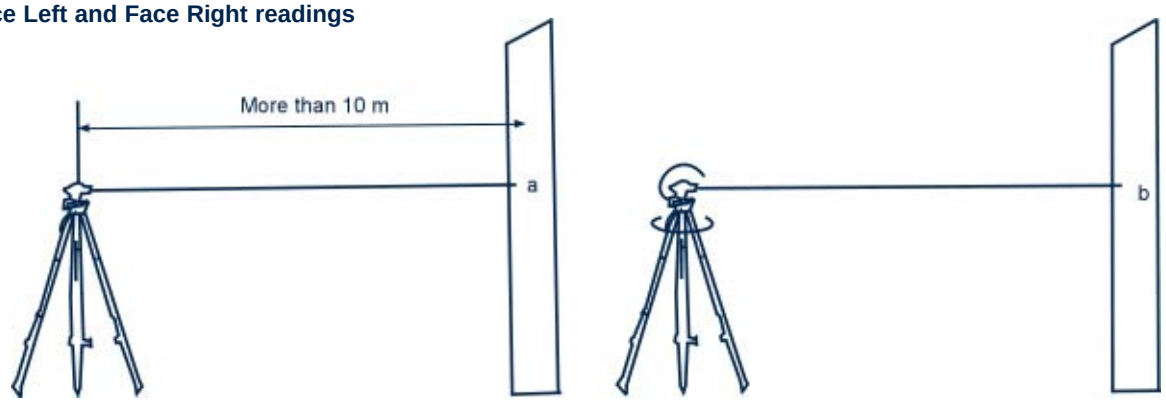

Figure 38
Horizontal adjustment of the vertical reticle line

5. Turn the micrometer knob to position 34' 20" at the minutes and seconds index. The 198° reading at the H window will now be positioned slightly off-centre (Figure 38). Turn the horizontal fine motion screw to re-centre the 198° reading at H. Look through the telescope. The target will now appear slightly off-centre in the reticle.
6. To eliminate the remaining 20" excess, remove the reticle adjustment cover and turn the left and right capstan screws with the adjusting pin to re-centre the target in the reticle. The difference between Face Left and Right readings will now be 180°.

Vertical adjustment of the horizontal reticle line (360° graduation)

This adjustment is required for the correct determination of the vertical angle (Figure 39):

1. Set up the theodolite in a level position, set the vertical circle to 90°, erect a staff 20 to 40 m away and read the position of the reticle against the staff graduations (reading a).
2. Transit (turn around) the telescope vertically, set the vertical circle to 270° and sight the staff to confirm that the reticle is centred on the same graduation (reading b).

Figure 39
Vertical adjustment of the horizontal reticle line

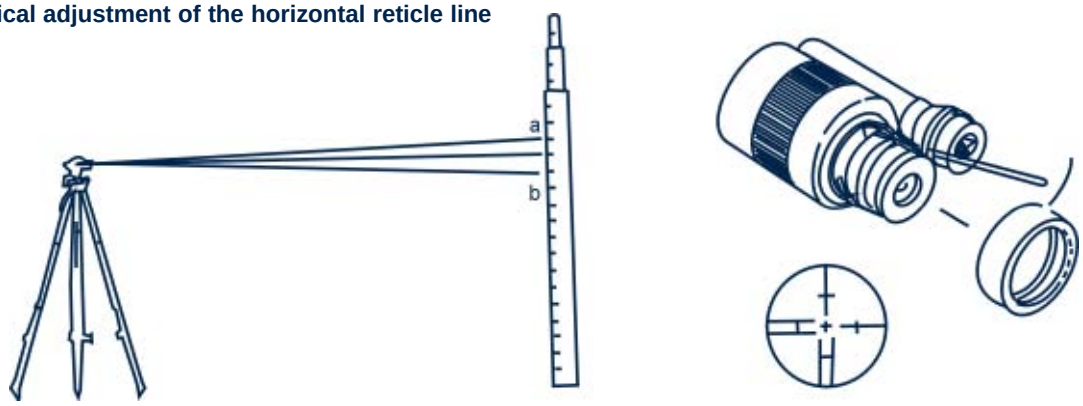

3. If readings a and b do not coincide, remove the reticle adjustment cover and turn the top and bottom capstan screws with the adjusting pin to position the reticle halfway between the reading a and reading b graduations.

Adjustment of the optical plummet

1. When the theodolite is level and the surveying point appears in the centre of the reticle, loosen the horizontal motion clamp screw, turn the theodolite through 180º and look at the surveying point again. The surveying point should appear in the centre of the reticle.
2. If the surveying point is out of centre:
   a) Correct one half of the displacement with the four optical plummet adjustment screws (Figure 40 and Figure 13). Correct the remaining half by turning the levelling screws.
   b) Rotate the instrument and repeat the adjustment to ensure that the surveying point is always in the centre of the reticle.

Figure 40
Adjusting the optical plummet

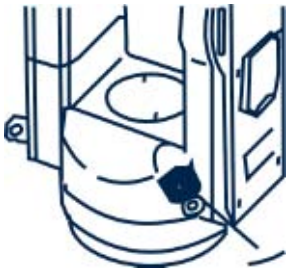

2.5.7. General remarks

The following practical remarks should be taken into account when carrying out a tacheometric survey:

- Survey more area than required for the design
- Surveying is a job to be carried out with precision. By its nature, surveying can lead, after some experience, to automatism or robotism. It is at this stage that mistakes most probably occur. Therefore regularly check your numbers, angles and distances in the field and make sure to close the traverse
- There is nothing to be gained from hiding errors, as this does not remove them. They will reappear at a later stage when dealing with them will be much more difficult and expensive

2.6. Grid surveys using a level instrument

Grid surveys are often used in areas proposed for the development of surface irrigation projects. This survey method involves the setting out of a grid of points in the area, for which a contour map is required. After taking staff readings of all points in the grid and after the calculation of the reduced levels (elevations), the elevations are plotted and a contour map is prepared.

During actual implementation of the proposed project the grid pegs in the field play an important role as they give easy reference points for setting out canal alignments, for the land levelling, etc.

2.6.1. Setting out a grid

The area to be surveyed should be covered by a grid of points at 25 to 100 m intervals for sprinkler irrigation systems and 10 to 50 m intervals for surface irrigation systems. The latter irrigation method usually requires a closer grid, as surface irrigation schemes need land levelling, for which a more detailed contour map is needed. The selected grid interval also depends on the topography of the area. For large areas with a flat topography the larger grid interval of 50 m could be selected. For areas with steep slopes a closer grid should be chosen in order to reduce the vertical distance between grid points. Once the grid interval has been determined, the following method of setting out the grid should be used (Figure 41).

Setting out a baseline

A baseline is set out on the ground, usually at the edge or the centre of the area to be surveyed. It is advisable not to site the baseline in an area that will be disturbed by the developments, as the baseline could then be lost, through land levelling for example. At distances of the chosen interval, for example 25 m, pegs are placed in a straight line. This can be done accurately with the level instrument, tape and ranging rods. The pegs could be numbered alphabetically. A number of pegs on the baseline should be cast in concrete, so that they will be permanently available. It is advisable to take reference points, including some on the baseline, from the (temporary) benchmark. In this way the grid becomes permanently fixed and can be set up again before actual implementation of the project.

Setting out (grid points) traverses

After setting out the baseline, parallel lines (traverses) at 25 m intervals are set at right angles to the baseline using a level instrument with horizontal scale or a prismatic square. The instrument is placed vertically above each peg on the

Figure 41
Setting out of grid points

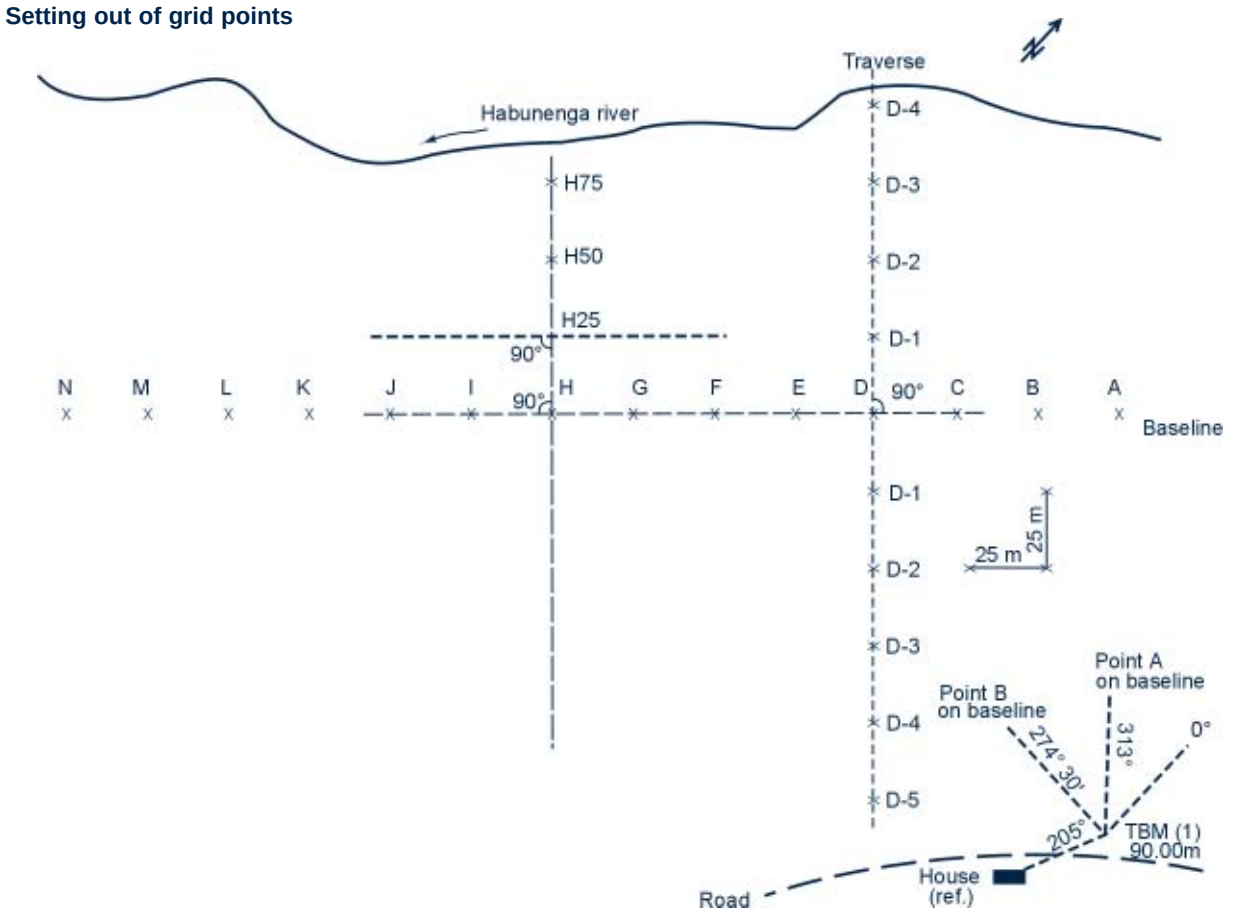

baseline, and then turned through an angle of 90°. Points are fixed on the ground with pegs at 25 m intervals along the traverse. These pegs are numbered numerically (such as traverse D in Figure 41) or given a reference mark according to their distance from the baseline (such as traverse H in Figure 41).

If the traverse is very long, one has to move the level instrument along the traverse. Alternatively, ranging rods could be used for setting out the traverse once two or three points on that line have been established with an instrument. With ranging rods in a straight line it is easy to sight other rods on points of the traverse still to be established (see Section 2.3.1).

If the length of the traverse is shorter than the length of the baseline, using the following method could save some time (see traverse H in Figure 41).

Place the instrument exactly over a peg on and about halfway along the baseline, for example point H_0, which corresponds with point H of the baseline. After sighting the baseline, the instrument is turned through 90° and pegs are placed at 25 m intervals on the H-Line (same procedure as described above). After this, the instrument is centered over peg H_{25} and the grid line A_{25} to N_{25} is set out. This process is repeated for all other lines, A_{50} to N_{50}, A_{75} to N_{75}, etc., until the whole area is covered by a grid of pegs at 25 m intervals.

If a more detailed survey, with points for example at 10 m intervals, is required, the interval in the field along the traverses could be a multiple of 10, for example 30 or 50 m, depending on the length of the measuring tape. Then, during the actual survey, the tape is placed between the pegs and intermittent points are read at the correct interval as indicated with the tape (Figure 42).

Setting out exact angles

For precise angle measurements or setting out exact angles, one should use a theodolite. However, for the setting out of angles to establish a grid of points in the field one could use a level instrument with a horizontal circle. It is, however, important to set out the angles as accurately as possible. For example, if an angle of 88° instead of 90° is set out, the error becomes significant for longer lines (Figure 43).

Figure 42
Reading grid points with the use of a measuring tape

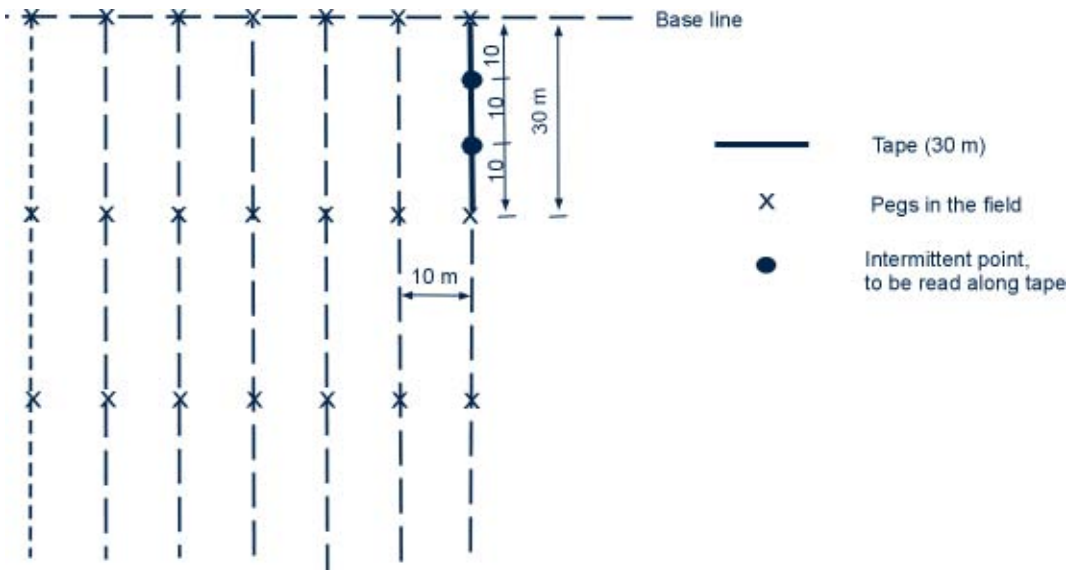

Figure 43
Error experienced when setting out grid lines

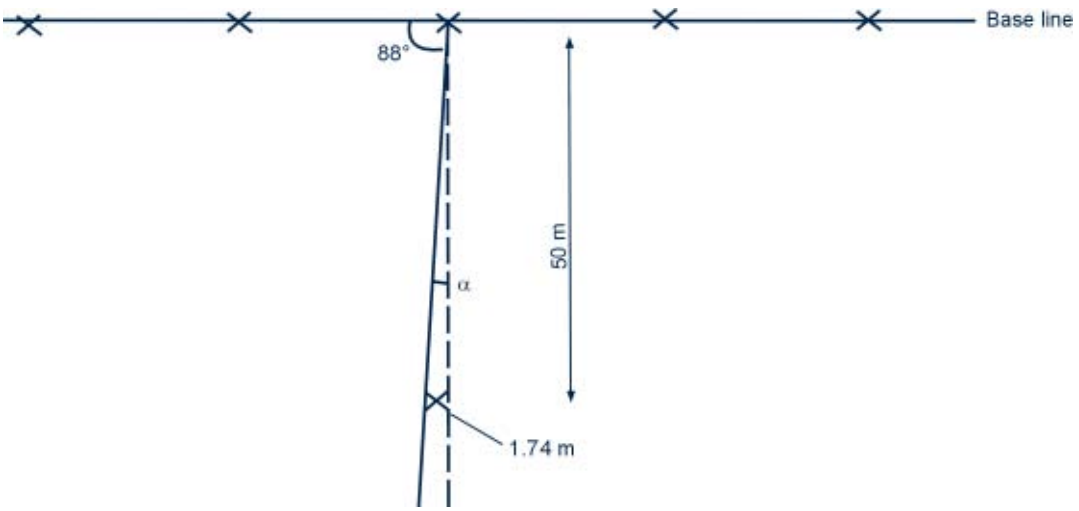

The error is given by the following formula:

Equation 24

Error = L x sinα

Where:

Error	=	Deviation (m)
L	=	Length of traverse (m)
α	=	Error in angle reading (°)

The error in this case is the amount of deviation from the intended traverse line direction.

Example 3

If L is 50 m and α = 2°, then the error is 50 x sin2 = 1.75 m

If L is 180 m and α = 2°, then the error is 180 x sin2 = 6.28 m

2.6.2. Checking the level instrument

It is recommended to check the correctness of the level instrument before a grid survey starts. The following procedure should be followed in order to determine whether an instrument is faulty (Figure 44).

Figure 44
Checking the level instrument

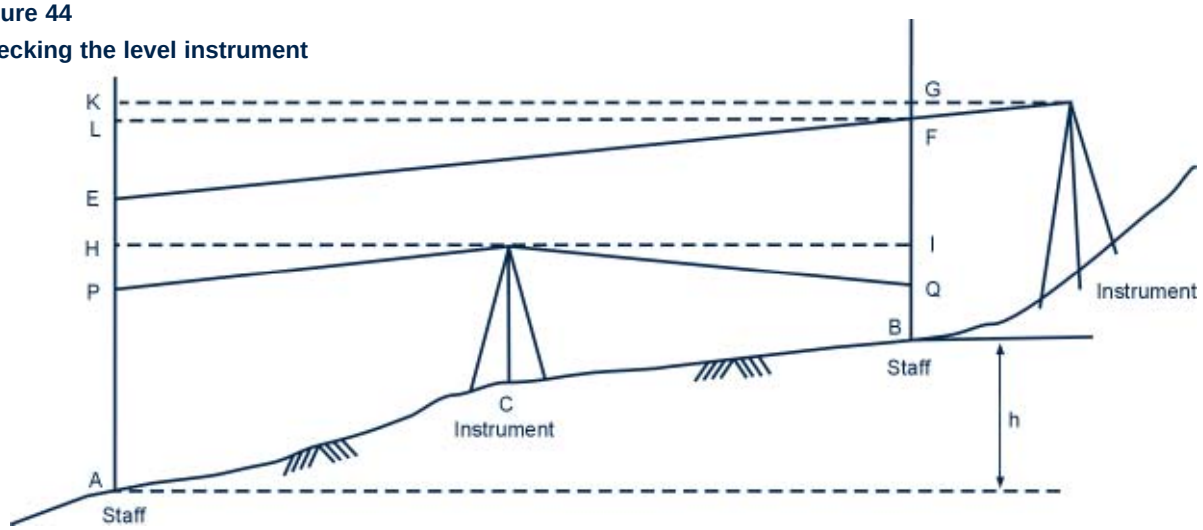

1. Place the instrument exactly between the two points to be read.
2. The difference in elevation between A and B (h) is AH – BI if the level instrument is okay or AP - BQ if the level instrument is faulty. However, both readings will give the same height difference between A and B.
3. Place the instrument on one side of both staffs (for example at the right of both staffs, as in Figure 44). The correct reading for the difference in elevation between A and B would be h = AK - BG. With a faulty level instrument the reading would be h' = AE - BF.
4. Error calculation:

   LE + AE = h + BF or h = LE + AE - BF

   h - h' = LE + AE - BF - (AE - BF) = LE
5. The fault in a level instrument can be adjusted with the adjustment screws. Reference is made to instruction booklets that are supplied with each level instrument on how to adjust.

2.6.3. The actual survey

As indicated in Section 2.6.1, a topographic survey should always start from a benchmark, such as position TBM (1) in Figure 41. It is not advisable to make the distance between the instrument and the staff too long. Too long a distance makes exact reading of the staff difficult, especially when it is hot or windy. The basic principle of reading a staff has been explained earlier and is shown again in Figure 45.

Figure 45
Principle of staff reading

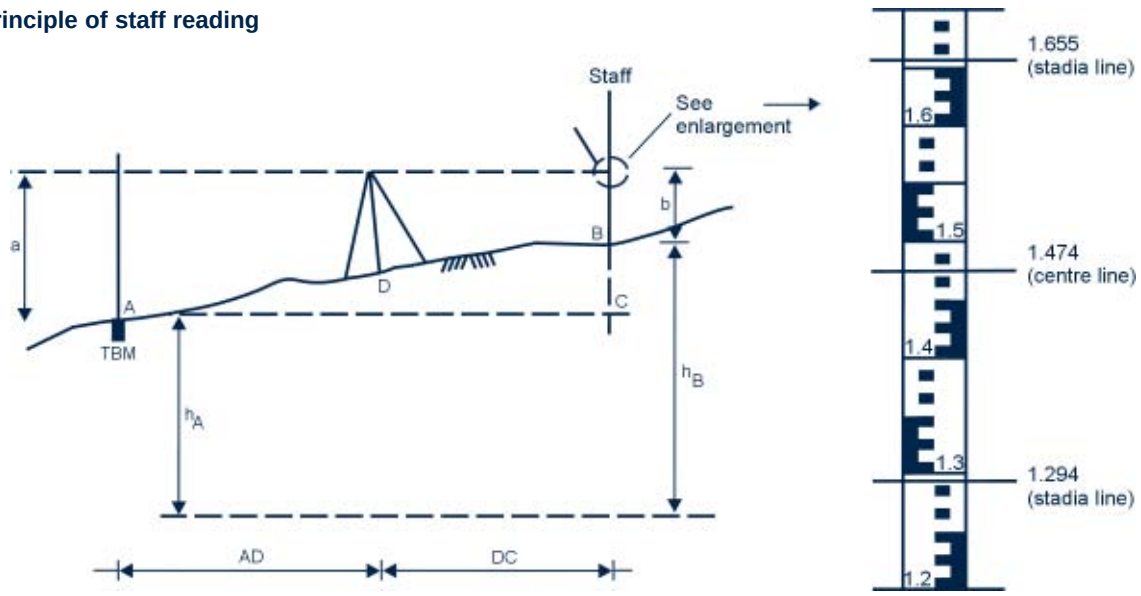

Taking measurements

Using the level instrument, spot elevations should be taken around all the pegs in the field. The staff should be placed on a point that typically represents the area around the peg. Thus for example if the wooden peg is on an isolated anthill, do not take the elevation on top of that anthill but take a level a bit away from that point. The safest way to carry out the survey is to start at a benchmark, then survey two to four traverses and close either on the same benchmark as where the survey started or another known benchmark in the area. It is advisable to concrete every 4th to 6th peg on the baseline, which could serve as TBMs. By surveying a small part of the total area at a time, one can avoid too much repetition in case of a large survey error. Figure 46 shows the principles of surveying, including opening at a benchmark (AB), change points (CD/CE, JK/JL), intermediate points (FG and HI) and closing at another benchmark (MN).

Methods used for recording

The next step is to record the staff readings in a survey notebook and calculate the reduced levels later, which is referred to as reducing in surveying. Two methods, the rise and fall method and the height of line of collimation method, are commonly used for recording and reducing and are explained below.

The rise and fall method

From Figure 45 the centre line reading on the staff at point A is a and on the staff at point B is b. Therefore the difference in elevation height between A and B is given by:

$$h_B - h_A = BC = a - b$$

If the centre line reading at point A is larger than that at point B (in which case the difference between a and b is positive), it represents a rise. This means that in that case the level at point B is higher than the one at point A. On the other hand, if the value of a is smaller than that of b (in which case the difference between a and b is negative), it represents a fall. This means that the level at point B is lower than the one at point A. Therefore, in order to calculate the level at point B when the level at point A is known, one has to add a rise to or subtract a fall from the level at point A. This can be explained simply with the following expressions:

Level at B = Level at A + Rise or
Level at B = Level at A - Fall

The levels at points A and B are normally referred to as reduced levels (RL) (see Section 2.3.8).

Thus the height level of point B is:

Equation 25

$$h_B = h_A + (a - b)$$

Where:

h_B = Level at point B (m)
h_A = Level at point A (m)
a = Centre line reading at point A (m)
b = Centre line reading at point B (m)

When the second centre line reading (Forward Station (FS) or Intermediate Station (IS)) is lower than the first centre line reading (Back Station (BS)), it represents a rise. When the second centre line reading is higher than the first centre line reading it is a fall.

Figure 46
The field survey methodology

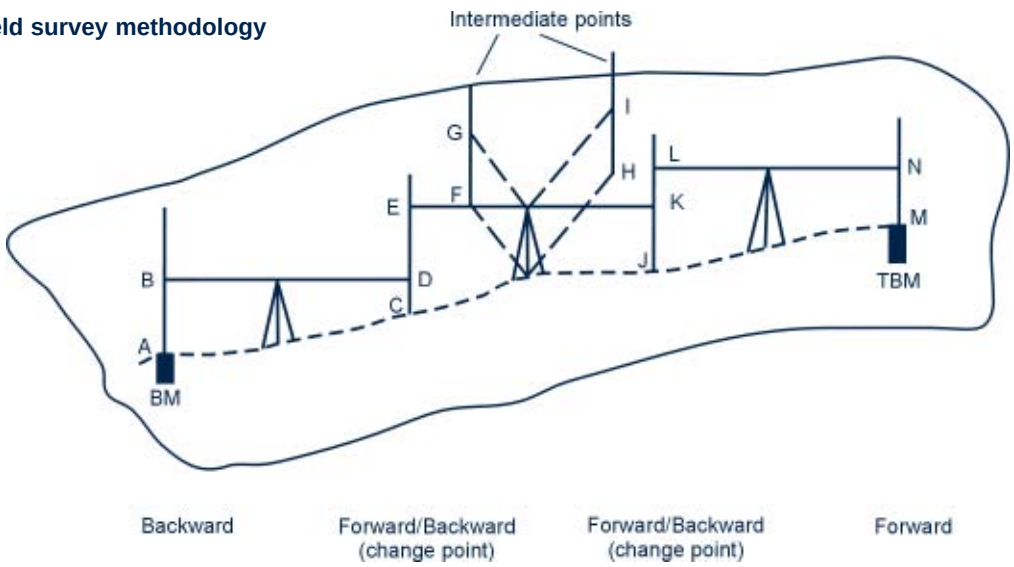

Example 4

Given: a = 2.216 m, b = 1.474 m, h_A = 100.00 m (TBM elevation). What is the level at point B?

h_B = 100.00 + (2.216 - 1.474) = 100.742 m

In this case a is larger than b and thus the difference between them is positive, which means a rise. This means that the level at point B is higher than the level a point A.

Given: a = 0.749 m, b = 1.756 m, h_A = 100.00 m. What is now the level at point B?

h_B = 100.00 + (0.749 - 1.756) = 98.993 m

In this case a is smaller than b, thus giving a fall. This means that the level at point B is lower than the level a point A.

The height of line of collimation method

In this method, the height of the line of collimation above the datum line (for example the TBM) is determined by adding the centre line (staff) reading of the point of a known elevation to the RL of that point (Barnister and Raymond, 1986). In Example 4, TBM has been established to be 100.00 m. The centre line reading at this point, referred to as a, is 2.216 m and therefore the height of the line of collimation becomes 102.216 m (= 100.00 + 2.216 m). To calculate the RL at the second point (FS or IS), the staff centre line reading is subtracted from the height of line of collimation.

Horizontal distance

The difference between upper and lower stadia lines (Figure 45) multiplied by 100 gives the horizontal distance in metres between the staff and the instrument.

It is advisable to make the distances between the instrument and the staff, such as AD and DB in Figure 45, more or less equal in order to eliminate possible errors when there is a deviation in the horizontal line of sight, as explained in Section 2.6.2 and shown in Figure 47.

Example 5

Using the same readings from Example 4, where RL_A = 100.00 m, the staff centre line reading at point A is 2.216 m and the staff centre line reading at point B is 1.474 m, what is the level at point B?

Height of line of collimation = 100.00 + 2.216 = 102.216 m

RL_B = Height of line of collimation - Centre line reading at point B

RL_B = 102.216 - 1.474 = 100.742 m, which is the level at point B

Also using the same readings for the second case from Example 4, where RL_A = 100.00 m, the staff centre line reading at point A is 0.749 m and where the staff centre line reading at point B is 1.7456 m, what is the level at point B?

Height of line of collimation = 100.00 + 0.749 = 100.749 m

RL_B = 100.749 - 1.756 = 98.993 m, which is the level at point B

Example 6

Stadia lines readings on point B are:

Upper hair = 1.655 m

Lower hair = 1.294 m

What is the horizontal distance between the instrument and point B?

Horizontal distance: DB = (1.655 - 1.294) x 100 = 36.1 m

Figure 47
Elimination of error due to disparallelism

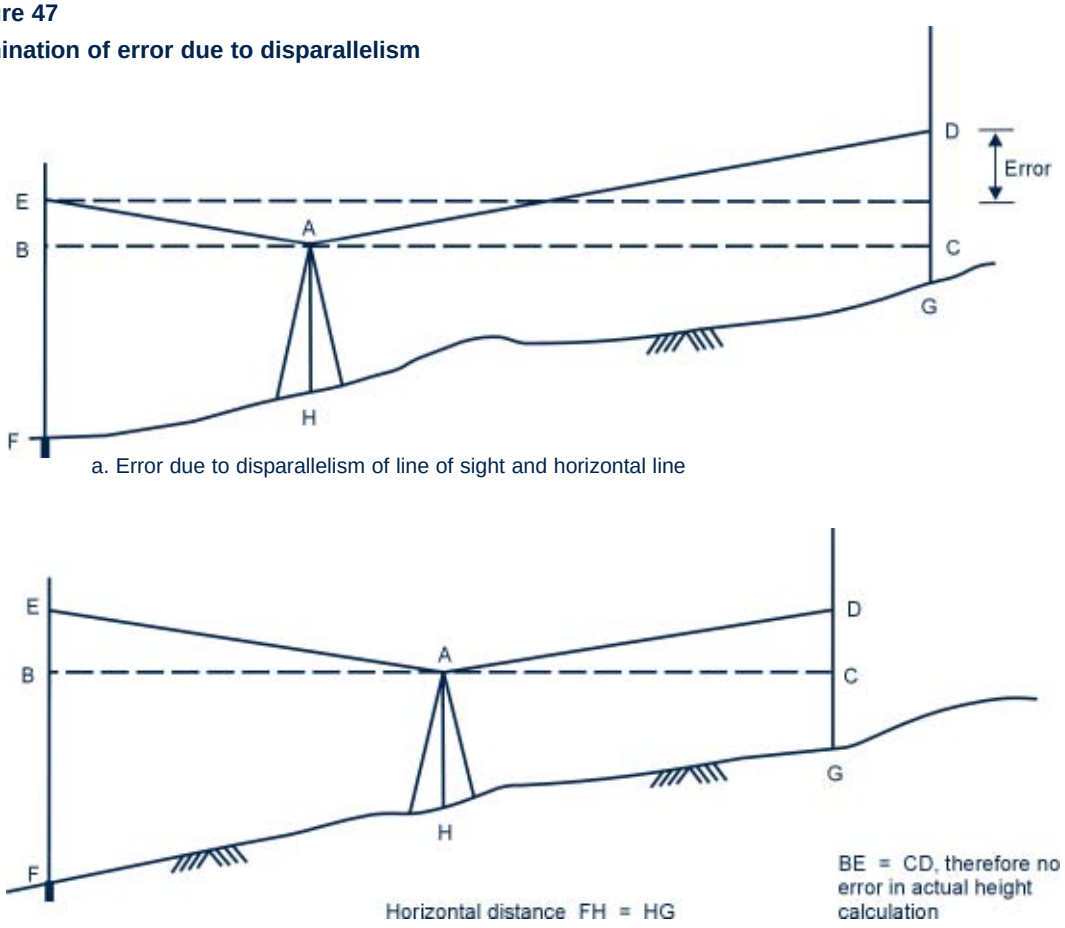

a. Error due to disparallelism of line of sight and horizontal line

b. Elimination of disparallelism error by equalling backward and forward distances

The actual recording and data processing

All levels should be written down in a clear order. Table 5 shows the field results of part of a topographic survey using the rise and fall method. Table 6 shows the results showing a method whereby immediately reduced levels are calculated (height of collimation method).

After closing on a benchmark the survey error can be calculated quickly by adding up all backward and forward readings. The difference should be zero if one closes on the same benchmark or the difference in elevation between two known benchmarks, if one closes on a benchmark different from the one at starting.

The accepted error depends on the accuracy required for the survey, but in general ranges from 5 to 10 x $\sqrt{L}$ in mm, where L is the surveyed distance in km. In Table 5 and 6 the survey distance (L) covered is 0.40 km. The accepted error in mm is 5 x $\sqrt{0.4}$ = 3.2 mm. An error of 3 mm is just acceptable.

Example 7

Using the survey data in Table 5, calculate the reduced levels of stations 1, 2, 3 and 4, using the 'rise and fall' method. The height of the TBM is 89.694 m.

The calculations using Table 5 are done as follows:

1) 1.740 - 0.738 = +1.002, which is positive → rise → RL_1 = 89.694 (benchmark) + 1.002 = 90.696
2) 0.738 - 2.033 = -1.295, which is negative → fall → RL_2 = 90.696 (previous calculated point) - 1.295 = 89.401
3) 1.630 - 1.750 = -0.120, which is negative → fall → RL_3 = 89.804 - 0.120 = 89.684
4) 1.553 - 1.694 = -0.141, which is negative → fall → RL_4 = 89.684 - 0.141 = 89.543

Table 5

Extract of Nabusenga irrigation scheme (Zimbabwe) field survey data from survey book: recording using the rise and fall method

Surveyor J. Stoutjesdijk — Reduced by

Date 15 October 1992 — Final R.L.s by

Weather Sunny & hot — Transferred by

Survey Nabusenga — 94a

Stations Transects V to W

Back-sight	Intermediate	Fore-sight	Rise	Fall	Reduced level	Adjustments	Final R.L.	REMARKS
1.740							89.694	Benchmark R0
	0.738		1.002				90.696	V-75 (1)
	2.033			1.295			89.401	V-50 (2)
	1.851		0.182				89.583	V-25
	1.185		0.666				90.249	V0
	0.807		0.378				90.627	W0
	1.419			0.612			90.015	W-25
	1.842			0.423			89.592	W-50
	1.630		0.212				89.804	W-75
1.553		1.750		0.120			89.684	c/p (3)
	1.694			0.141			89.543	V25 (4)
	1.296		0.398				89.941	V50
	1.255		0.041				89.982	V75
	1.339			0.084			89.898	W25
	1.534			0.195			89.703	W50
	1.824			0.290			89.413	W25
1.632		1.294	0.525				89.938	c/p
		1.873		0.241			89.697	Benchmark

Table 6

Extract of Nabusenga irrigation scheme (Zimbabwe) field survey data from survey book: recording using the height of line of collimation method

Surveyor J. Stuijzedijk Reduced by ...

Date 15 October 1990 Final R.L.s by ...

Weather Sunny & hot Transferred by ...

Survey Nabusenga 94 b

Stations Transects V to W

Back-sight	Intermediate	Fore-sight	Rise	Fall	Reduced level	Adjustments	Final R.L.	REMARKS
1.740						91.434	90.694	Benchmark 80 (1)
	0.738						92.646	V-75 (2)
	2.033						89.401	V-50 (3)
	1.851						89.584	V-25
	1.185						92.244	V0
	0.802						90.627	W0
	1.419						90.015	W-25
	1.842						89.592	W-50
	1.630						89.804	W-75 (4)
1.553		1.350				91.237	89.684	CP (5)
	1.694						89.543	V25 (6)
	1.246						89.941	V50
	1.255						89.932	V75 (15 m to river bank)
	1.339						89.848	W75 (12 m to river bank)
	1.534						89.703	W50 (small earth dam)
	1.824						89.413	W25
1.632		1.299				91.570	89.938	CP
		1.873					89.697	Benchmark

(4.616) ← 3 mm error → (4.616)

RESOURCE ASSESSMENTS

Example 8

Using the survey data in Table 6, calculate the reduced levels of stations 1, 2, 3, 4, 5 and 6, using the 'height of line of collimation' method. The height of the TBM is 89.694 m.

The calculations in Table 6 are done as follows:

1) RL_1 = 89.694 (benchmark) + 1.740 (back sight) = 91.434
2) RL_2 = 91.434 - 0.738 = 90.696
3) RL_3 = 91.434 - 2.033 = 89.401
4) RL_4 = 91.434 - 1.630 = 89.804
5) RL_5 = 91.434 - 1.750 = 89.684
   89.684 + 1.553 = 91.237
6) RL_6 = 91.237 - 1.694 = 89.543

Figure 48
Contour map

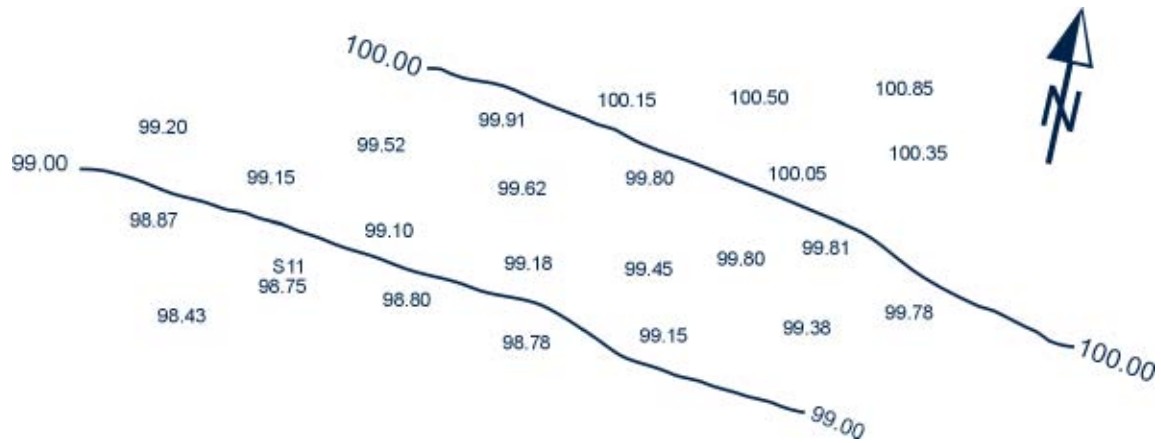

2.6.4. Plotting

The results of the survey have to be plotted on a map, after which the contour lines can be drawn, as explained in Section 2.5.5 (Figure 48).

2.6.5. Use of pegs during implementation

Once the contour map is ready, design work for the irrigation project is carried out. If the project is going to be implemented soon after the survey and design phases, one might still find the grid of pegs intact in the field, which will play an important role in setting out canal alignments, pipe alignments, etc. This can often be done with limited use of theodolites or level instruments with horizontal circle as the pegs give easy reference points.

Annex 1

Programmes for the calculation of reduced levels in tacheometric surveys for programmable calculators commonly available

Programmable pocket calculator HP 15C

The starting point for the programme is Equation 11 for the calculation of reduced levels, explained in Section 2.3.9:

$RL_s = RLi_i + H_i + 0.5\ [(UH - LH)\ x100]\ x \sin 2A - MH$

RL, H, UH, LH and MH are expressed in metres and A in degrees, minutes and seconds. The reduced level of the station where the instrument is set up (RL_i) and the height of instrument (H_i) are constant for each reading station. They can be stored and should be changed each time the instrument is moved to another station.

Suppose we store RL_i in cell 5 → STO 5 and H_i in cell 6 → STO 6

The upper hair (UH), middle hair (MH), lower hair (LH) and vertical angle (A) are variables for each shot taken. They have to be entered while the programme is running. The order in which they have to be entered is:

- UH
- MH
- LH
- A

While running the programme, the first figure to appear is the slope distance divided by 100. The second figure is the reduced level.

The programme to be entered in the calculator is:

- f LBL A
- R/S (input of upper hair UH)
- STO1
- R/S (input of middle hair (MH)
- STO2
- R/S (input of lower hair (LH)
- STO3
- R/S (input of vertical angle A)
- STO4
- → H (to read angle in decimals)
- 2
- *
- SIN
- 0.5
- *
- RCL1
- RCL3
- -
- R/S (read slope distance * 100)
- *
- 100
- *
- RCL5
- +
- RCL6
- +
- RCL2
- -
- GTO A (read reduced level)
- GP/R

Programmable pocket calculator HP42S

Before the actual programme is entered, the variables should be stored in the memory. To run the programme, use the <XEQ> key and input the variables one by one. After every entry press <R/S) key to move to the next variable. The following is the basic programme and can be improved by making loops or single inputs for constants.

The entering of the programme should be done as follows:

- 0
- STO"RL_s"(create storage capacity for variables)
- STO"RL_i"
- STO"H_i"
- STO"UH"
- STO"MH"
- STO"LH"
- STO"AN"

- •GTO.. (following three key strokes necessary to initiate programming)
- •PRGM
- •PGM.FCN
- LBL"TACH" (gives programme an unique name)
- INPUT"RL"
- INPUT"HI"
- INPUT"UH"
- INPUT"MH"
- INPUT"LH"
- INPUT"AN"
- RCL"AN"
- 2
- *
- SIN
- 50

- *
- RCL"UH"
- RCL"LH"
- -
- *
- RCL"RL_i"
- +
- TCL"H_i"
- +
- RCL"MH"
- -
- STO"RL_s"
- VIEW"RL_s"
- END

Programmable pocket calculator TI-60

1. Make enough memory available by pressing <2nd part 6>
2. Clear the programme space by pressing <2nd CP>
3. To start programming press <LRN>
4. In this case HI and RL_1 are added and stored in 0, i.e. H_i + RL_1 ? STO 0.
5. The order in which variables have to be entered is:
   - Vertical angle
   - UH
   - LH
   - MH

The programme to be entered reads as follows:

- R/S (input vertical angle)
- 2nd DMS-DD (to change angle into decimals)
- *
- 2
- =
- SIN
- STO 2
- (
- R/S (input UH)
- *
- 100
- -
- R/S (input UH)
- *
- 100
- -
- R/S (input LH)
- *
- 100
- =
- STO 1
-)
- RCL 2
- *
- RCL 1
- ÷
- 2
- +
- RCL 0
- -
- R/S (input MH)
- =
- R/S (read reduced level)
- RCL 1 (read slope distance)
- RST

To get out of the programme mode, press <LRN>again.

Chapter 3
Soils and soil surveys

In soil science, soil **texture** refers to particle size or the relative amounts of sand, silt and clay. These primary soil constituents play an important role in drainage, nutrient fertility, compactability, elasticity, freeze-thaw behaviour, groundwater recharge, adsorption of pollutants, and many other properties that are relevant to agriculture, development, planning, suitability analyses, environmental studies, and biogeography (Byron, 1994). Soil **consistency** refers to the strength and nature of the cohesive forces within a soil and the resistance of the soil to mechanical disintegration, deformation and rupture. Consistency depends largely on the soil texture, especially the clay content. It also depends on the moisture content of the soil. Soil **structure** refers to the aggregation of primary soil particles (sand, silt, clay) into compound particles or clusters of primary particles, which are separated from the adjoining aggregates by cracks or surfaces of weakness. It is characterized by the shape and size of the aggregates as well as by the distribution of pores brought about by this aggregation (Euroconsult, 1989). More detailed information on soil texture and structure is given in Module 4.

The aim of any soil survey is to produce a soil map, showing map units that are delineated on the basis of soil characteristics, as well as a soil survey report, dealing with land and cultural characteristics of the area under consideration.

Soil surveys are, as a rule, undertaken by soil scientists. For small projects, however, irrigation specialists at times may undertake the soil surveys. This chapter covers the very basic elements of soil surveys for irrigation purposes. For an in-depth study on soil surveys the reader is referred to FAO (1979). As individual countries may have their own systems for land classification, the reader is also advised to consult with the relevant Land Use Planning Services.

To judge a soil, one has to observe its profile, which is normally characterized by a succession of layers or horizons, describe the pits and take samples for laboratory analysis.

3.1. Field observations

The objective of the field survey is the identification of significant areas of each type of soil in an area. Descriptions of soil characteristics serve as the basis for soil identification, classification and interpretation.

3.1.1. Soil pit description

Depending on the scale of the soil map to be drawn, a number of pit profiles have to be described, backed by a number of auger holes. At least three auger holes per ha should be drilled and one soil pit for each different soil type if the scale does not exceed 1 : 5 000, which is normally the case for irrigation projects (Ministère de la coopération française, 1980).

Before a soil pit description can start, representative pits have to be identified. A photo-interpretation map or topographical map can be taken into the field where traversable survey routes identified in the office can be checked on the ground. Doing so can reduce the amount of fieldwork substantially, since areas not being worth further investigation can be left unsurveyed.

Once the variation in land and soil conditions and their distribution are roughly understood, survey routes should be selected as perpendicular as possible to expected boundaries between different soil types. Surveying in transitional zones and parallel to their direction should be avoided, as these zones are not representative of a given soil unit. Soil pits should be selected at the most characteristic sites of the soil units and their location should be indicated on the topographic map for later references.

Field equipment required for a soil survey includes:

- Munsell (colour) handbook
- Water flask
- Auger
- Chisel
- Towel
- Soil packs
- Measuring tape

Soil pits are described using the following parameters: depth, texture, colour, structure, permeability and limiting material, such as gravel and crust material. These effective parameters are used to distinguish the soil horizons. The

effective depth of the soil profile is determined by the biological activities visible along the depth of the soil profile, by the limiting materials and by the depth of the water table.

All this information is compiled into a form giving the standard code description. Using the relevant land capability and irrigability classification system, a class can be derived. Some classifications distinguish five classes, namely A, B, C, S and D, with class A being the most suitable for irrigation and class D being unsuitable for irrigation (Thompson and Purves, 1979).

It should be noted, however, that this classification holds more for surface irrigation systems than for pressurized irrigation systems. It is based on a 5 to 6 day irrigation interval, the slope of the land, the water-holding capacity and the soil permeability. Mild slopes and soils with higher water-holding capacity are ranked higher. As a rule, higher depths of water application and less frequent irrigation combined with gentle slopes are suited to surface irrigation. However, the built-in management of pressurized systems combined with their flexibility for very frequent irrigation (even daily in the case of drip systems) allows irrigation of light soils (with lower water-holding capacity) and higher slopes (up to 4%). Therefore, lower irrigability classes of soil or marginal soils can be easily irrigated with these systems.

An example of a soil pit description is given in Table 7.

3.1.2. Augering

Augering is mostly used to complement information on soil pits. It is a quick way of checking the extent of the soil unit around the profile. A record of the depths of the various layers and their estimated content of organic matter, soil texture, colour, their estimated content of organic matter, soil texture, colour, consistency, concretions etc., are sufficient for establishing changes in soil profile properties through augering.

3.1.3. Soil sampling

In order to complete and confirm the visual field observations, soil samples are collected. Some principles of sampling are:

- In the soil pit, each horizon is made accessible so that samples can be taken easily. Of each horizon, at least two but preferably three samples are taken (totalling about 1 kg of material from each freshly exposed horizon), depending on the efficiency of the laboratory
- Each sample should be put in a sample bag and sample box, clearly indicating the place name, date, soil pit number, horizon, depth and name of the observer. These details should appear on the box and on/in the bag
- For mechanical analysis disturbed samples are adequate. For determining the water-holding capacity undisturbed soil samples are needed and special sampling cylinders have to be used

Table 7
Example of a soil pit description

Date	2 May 1991
Pit number	6
Position	30 m South of the gate along the access road
Vegetation, topography, cropping history	Tall, fairly thick Msasa woodland. Fairly sparse grass cover. Gently undulating. Virgin
Effective depth	70-80 cm to a gravel band on weathering rock
Profile characteristics (texture, permeability, structure, colour, etc.)	Topsoil: Clay of crumb structure. Heavy body. 5YR3/4. Upper subsoil: Sub-angular blocky clay. 2.5YR3/4. Permeability slightly restricted. Lower subsoil: Angular blocky clay. Slight mottling. 2.5YR3/4. Permeability slightly restricted. Limiting material: Loose gravel band 20 cm thick on greenstone schist
Other features ("t" factors, etc.)	Slight tendency of compaction
Land characteristics	1-1.5% slope
Erosion	None visible
Wetness	A little mottling above the gravel suggests slight wetness.
Code	3F43Z/2F / A-1/Gs
Class	II
General remarks	A representative pit of this area. A good maize soil. Derived from greenstone of the Basement Complex. Mostly formed *in situ*.

- Sampling, as well as pit description, is preferably done after the rains have finished and when the soil has dried out.

3.1.4. Infiltration test

Infiltration tests are used to determine the infiltration rate and the cumulative infiltration of a soil, described in Module 7. Of particular interest is the basic infiltration rate, which indicates the flow velocity in a saturated soil. Typical basic infiltration rates are given in Table 8.

Table 8
Typical basic infiltration rates

Soil type	Basic infiltration rate (mm/hour)
Clay	1-7
Clay loam	7-15
Silt loam	15-25
Sand loam	25-40
Sand	> 40

The infiltration rate should always be greater that the flow rate of the sprinkler used in case of a pressurized system, in order to avoid ponding and possible runoff of irrigation water (Module 8). In surface irrigation, it is an important data directly related to the intake opportunity time. More information on infiltration rates, and especially infiltration tests, is given in Module 7.

3.2. Laboratory analysis

For the purpose of designing an irrigation system, the two most important soil analyses to be carried out are the mechanical analysis and the determination of the water-holding capacity (WHC).

3.2.1. Mechanical analysis

Mechanical analysis serves to determine the particle size distribution in the soil, or its texture, by sieving and sedimentation. The sedimentation method is based on the law of Stokes: different sized sediment particles in suspension have different sedimentation times. The larger fractions will settle first, the smaller particles last.

From the results of the mechanical analysis, one can find in the texture diagram, or the USDA soil textural triangle, the texture class of the soil (Figure 49). Knowing the percentage of clay, silt and sand, lines are drawn as shown in Figure 50 (dotted lines). For example, a soil containing 30% sand, 30% clay and 40% sand is classified as a clay loam. Figure 51 shows two methods for generalizing soil texture classes (a less detailed and a more detailed one).

Figure 49
USDA soil texture triangle (Adapted from: Fitzpatrick, 1980)

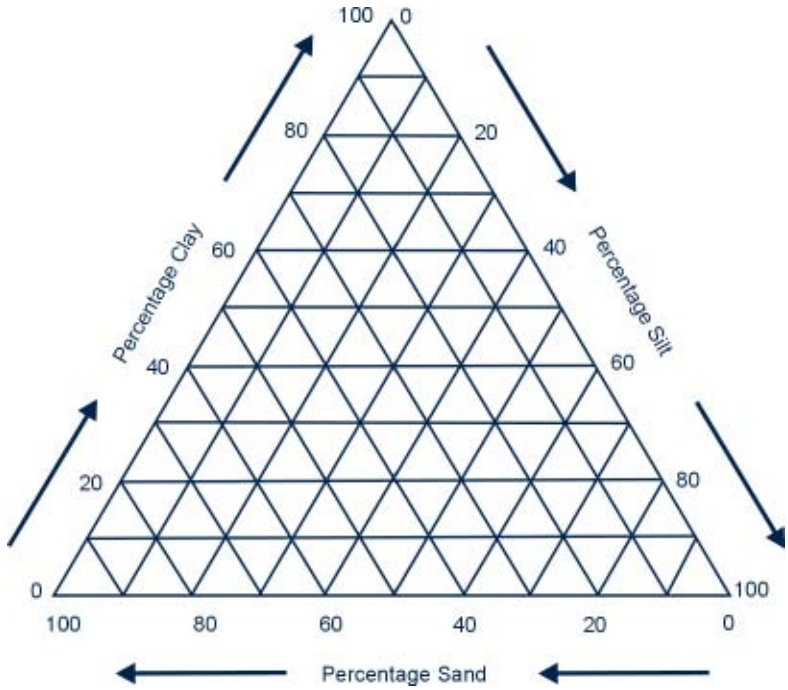

Figure 50
Soil texture class determination, using the USDA soil texture triangle

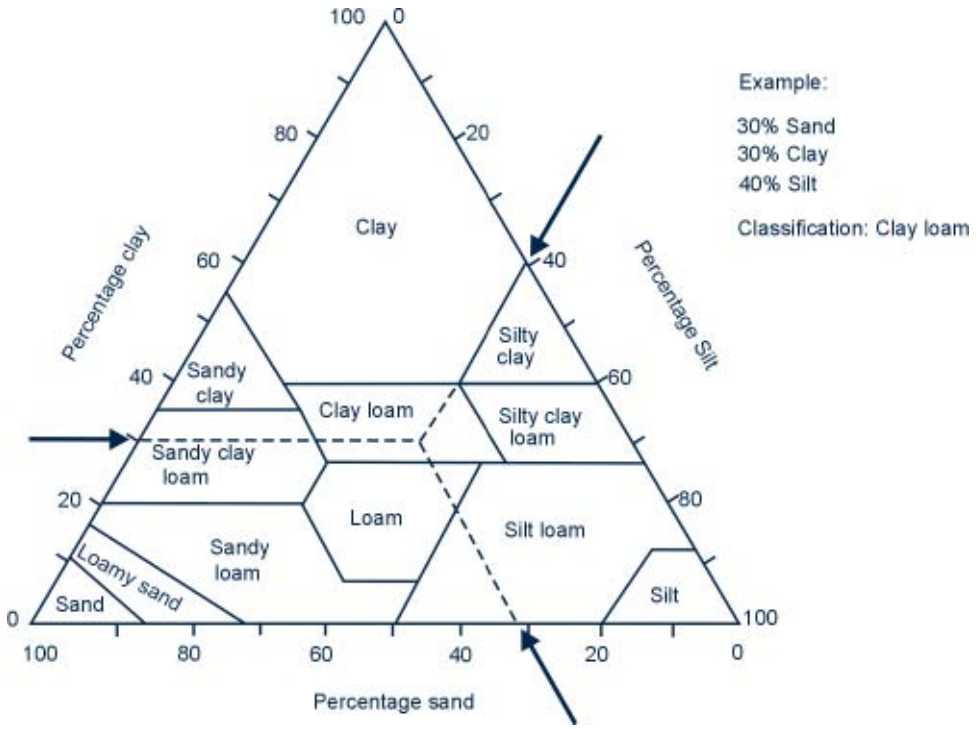

Figure 51
Two methods for generalizing soil texture classes (Adapted from: FitzPatrick, 1980)

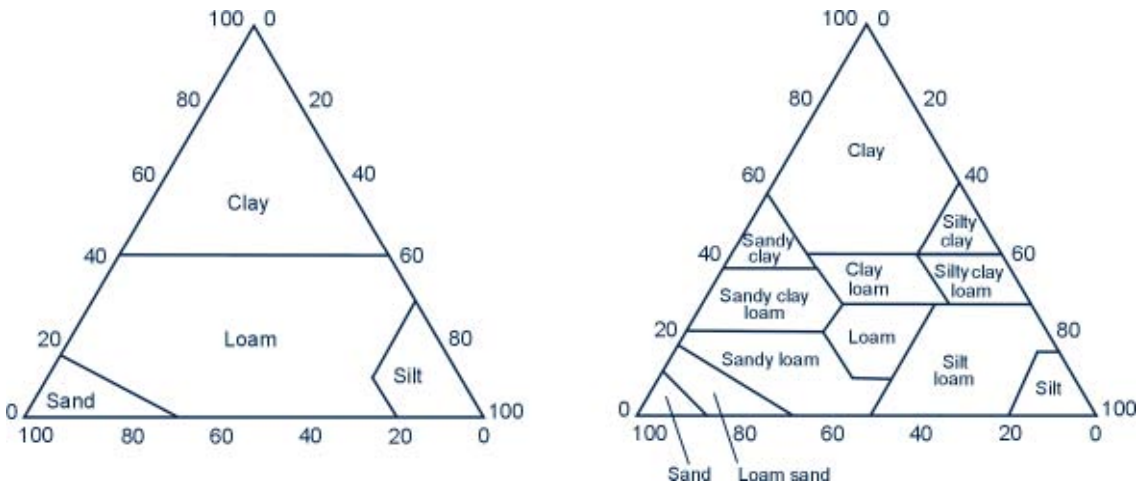

3.2.2. Water-holding capacity or total available soil moisture

Based on the data on soil texture, a first estimate of the water-holding capacity of the soil can be found in the literature. The water-holding capacity of a soil or the available moisture is defined as the difference between field capacity (FC) and permanent wilting point (PWP).

Field capacity is defined as the condition in a soil where free drainage of fully saturated soil took place for about 1 to 2 days and the maximum amount of water that a particular soil can temporarily hold. Depending on soil type the soil moisture at FC is held with a tension of 0.1-0.3 atmosphere (bars). The lighter the soil the lower the soil tension.

The permanent wilting point of a soil is the condition where the suction force of plant roots can not overcome the tension of 15 atmospheres (bars) and the remaining water is held around the soil particles. Sand can store less water

than clay or loam but, put under a slight pressure, sand releases the water more easily than clay or loam. It should be mentioned that the structure also plays a role: well-aggregated soil can store water in between the macro-pores of the aggregates.

The determination of the available moisture requires the determination of the FC and the PWP. They are both determined in the laboratory using the standard pressure plate technique. Cores of soil are wetted to saturation. Pressure would then be exerted until no more drainage water is measurable. In the case of FC, the pressure would be 0.1 atmosphere for light soils, 0.15 for medium soils and 0.3 for heavy soils. In the case of PWP, the pressure will be 15 atmospheres. At the end of the test, the wet soil cores are weighed and oven dried at 105°C for 24 hours and then reweighed. The moisture content is then expressed as percent of the dry weight of the soil:

Equation 26

$$SM_w = \frac{\text{Wet mass (weight) - Oven dry mass (weight)}}{\text{Oven dry mass (weight)}} \times 100$$

Where:

SM_w = Weight moisture content

For irrigation purposes it is always preferable to express the moisture content on a volumetric basis. Bulk volume consists of the volume of the soil particles (solid phase) and the volume of the pores or pore space. The weight of the bulk volume consists of the weight of the soil particles (solid phase) and the weight of the soil moisture. Porosity is defined as the ratio of pore space to total bulk volume. To convert the moisture content from weight basis to volumetric basis, the bulk density of the soil is required, which refers to the weight of a unit volume of dry soil, which includes the volume of solids and pore space (kg/m^3). Thus, the bulk density is determined by weighing the soil contained in a certain volume. This is the reason for sampling cores of soil. The following expression provides the bulk density:

Equation 27

$$D_s = \frac{\text{Mass (weight) of dry soil}}{\text{Bulk volume of soil}}$$

Where:

D_s = Soil bulk density

To convert the percentage of moisture from weight to volume basis the following equation is used:

Equation 28

$$SM_v = SM_w \times \frac{D_s}{D_w}$$

Where:

SM_v = Soil moisture by volume

SM_w = Soil moisture by weight

D_s = Soil bulk density

D_w = Water density

Since $D_w = 1$, the equation is simplified to:

$$SM_v = SM_w \times D_s$$

Uniform plant root development and water movement in soil occur when soil profile bulk density is uniform, a condition that seldom exists in the field. Generally, soil compaction occurs in all soils where tillage implements and wheel traffic are used. Compaction decreases pore space, thus decreasing root development, oxygen content, water movement and availability. Other factors that affect bulk density include plant root growth and decay, wormholes and organic matter. Sandy soils generally have bulk densities greater than clayey soils.

Having determined the moisture content at FC and PWP, the water-holding capacity of the soil or the total available soil moisture on a volumetric basis can be provided through the following expression:

Equation 29

$$SM_{ta\text{-}v} = SM_v\ (0.1\text{-}0.3\ \text{bar}) - SM_v\ (15\ \text{bar})$$

Where:

$SM_{ta\text{-}v}$ = Water-holding capacity by volume (%)

SM_v (0.1-0.3 bar) = Soil moisture by volume at FC (pF ≈ 2) (%)

SM_v (15 bar) = Soil moisture by volume at PWP (pF = 4.2) (%)

The SM_{ta} expressed in % can be expressed in mm/m by multiplying the SMv percent by 10. Table 9 gives a range of available soil moistures for different soils, while Figure 52 gives typical pF curves for sand and clay. Often Soil Moisture Tension (SMT) is indicated in pF, where pF is the negative logarithm (cm water column) and 1 000 cm water column is 1 atmosphere. The right y-axis of Figure 52 shows the Equivalent Pore Diameter (EPD). A specific pore size distribution of a given soil determines the specific relationship between its pF values and the corresponding moisture contents by volume, since at each pF level all pores wider than the corresponding critical EPD are empty.

Example 9

A soil has a soil bulk density of D_s of 1.2. After drying 120 grams of wet soil in an oven at 105-110°C for 24 hours, this soil lost 20 grams of moisture.

– *What would be the moisture volumetric content of the soil?*

– *What would be the corresponding water depth in mm/m?*

SM_w = (120 - (120-20))/100) x 100 = 20%

SM_v = 20 x 1.2 = 24%

Water depth = (24/100) x 1000 = 24 x 10 = 240 mm/m

Table 9

Range of average moisture contents for different soil types (Source: Euroconsult, 1989)

Textural class	Field capacity (FC) (Vol %)	Permanent wilting point (PWP) (Vol %)	Water-holding capacity (WHC) or available moisture (Vol % = mm/dm)	WHC or available moisture (mm/m)
Sandy	10-20 (15)	4-10 (7)	6-10 (8)	60-100 (80)
Sandy loam	15-27 (21)	6-12 (9)	9-15 (12)	90-150 (120)
Loam	25-36 (31)	11-17 (14)	14-19 (17)	140-190 (70)
Clay loam	31-41 (36)	15-20 (17)	16-21 (19)	160-210 (190)
Silty clay	35-46 (40)	17-23 (19)	18-23 (21)	180-230 (210)
Clay	39-49 (44)	19-24 (21)	20-25 (23)	200-250 (230)

Often, irrigation engineers find it convenient to use tables rather than waiting for the laboratory test on the values of FC and PWP. Such an approach should, however, be avoided. The range of available moisture within each textural class, as shown in Table 9, is too large to provide an accurate design basis. The tables should be used only exceptionally and such tables should have been derived from previous within-country tests. This can be more greatly appreciated by comparing the figures in Table 9 with those in Table 10.

Table 10

Available moisture for different soil types (Source: Withers and Vipond, 1974)

Soil type	Available moisture (mm/m)
Sand	55
Fine sand	80
Sand loam	120
Clay loam	150
Clay	135

The differences are especially big with the heavy and light soils.

3.3. Soil map and soil report

From the topographic map, the field observations and the laboratory results, a soils map can be drawn, indicating the different soil types with their area, the location of the soil pits, rock outcrops, gravel patches, etc. The soil report comprises a general description of the area with average slopes, indications of erosion, present vegetation, parent material, etc.

Moreover, a classification is given according to the country's soil classification as well as a standard code description.

Figure 52

Typical pF curves for silty clay and loamy fine sand (Source: Euroconsult, 1989)

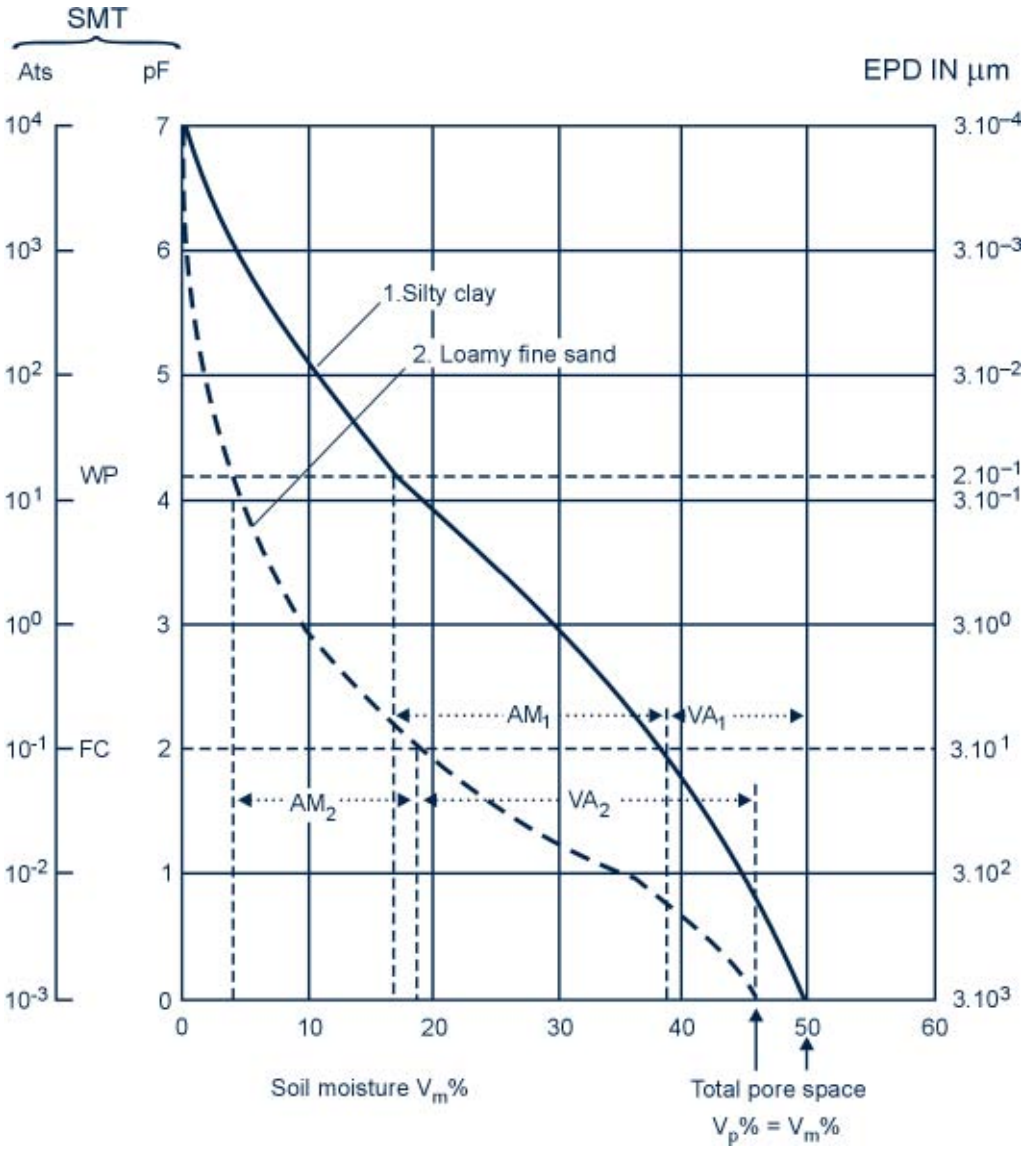

Chapter 4
Surface water resources

Cropping requires an assurance that there is enough water available at the water source throughout the growing season and that the conveyance system can provide the water to the fields, adequate in volume and command.

If water availability is low, an appropriate cropping pattern and planting time has to be considered. Where possible, crops requiring minimum water should be grown during the dry season and times of peak crop water requirements for different crops should be spaced and should not coincide with the period of low water availability at the source.

The water used for irrigation can be either surface water or groundwater. Irrigation water can be abstracted from rivers, lakes, dams/reservoirs, springs, shallow wells or deep boreholes. Another source of water is the so-called non-conventional source of water, which includes treated wastewater and desalinated seawater. Although on a very limited scale, some countries in East and Southern Africa use treated wastewater for landscape irrigation or irrigation of non-edible crops, or they return the effluent to the water supply reservoir after tertiary treatment. Desalinated seawater is not used at all yet in the sub-region in view of the high cost of desalinization. It is used in some countries of the Middle East and the Mediterranean basin, though mainly for municipal/domestic purposes.

Most countries in East and Southern Africa still have a bias towards the assessment and development of surface water resources as compared to groundwater resources and this has resulted in a considerable amount of surface water information being collected.

4.1. Water yield levels

A country like Zimbabwe is reasonably well endowed with water. However, only a small portion of the rainfall, usually less than 10%, appears as flow in the river systems, the rest being 'lost' to evaporation, transpiration or replenishment of groundwater.

There are considerable variations in water availability, both within a year and over the years. To be of any value, a constant water supply must be sustained, with a stated risk of failure. In Zimbabwe, a risk of 4% is generally employed for primary (municipal/domestic) purposes. This means that the failure to supply the quoted yield of water will be 4 in 100 years or 1 in 25 years. For irrigation purposes, a risk of 10% is used, meaning that the failure to supply the quoted yield of water will be 1 in 10 years. This is a rather conservative figure. Worldwide, a risk of 20% for agricultural use is generally acceptable, implying a failure to supply the quoted yield 1 in 5 years. Lower risk factors imply lower yields, since lower yields can be supplied with less risk than higher yields. Lower yields result in lower levels of investments in irrigation infrastructure (dam construction, conveyance systems, etc.), since the area that can be irrigated is less. Higher risks translate into higher yields and this could act as an incentive in irrigation infrastructure investment, thereby transforming the socio-economic status of most people, in particular the beneficiary rural communities. However, the risk factor should be carefully weighed against the benefits.

Conservative (low) risk factors lead to a lower total utilization of the water as less baseflow can be used (rivers) or a greater proportion of water held in storage to carry over with consequent higher evaporation losses from dams. It should be noted, however, that the yield at 10% risk gives greater security against short-term shortages than the yield at 20% risk.

Yield versus dam capacity curves can be constructed for various risk factors. These are asymptotic and there is an optimum yield obtainable for a certain dam capacity and any increase in dam capacity would not result in any significant increase in the yield. It is thus not cost effective to over-design a dam.

4.2. Rivers

Rivers or streams with a regular and certain minimum flow (baseflow) are suitable for irrigation. Unfortunately, many rivers in Southern Africa have short duration flash floods during the rainy season and no or very little flow during the dry season (Figure 53). These rivers are not suited for year round irrigation, unless the water can be stored in a reservoir behind a dam.

The hydrograph of river A shows that the base flow at 10% risk is 1 m^3/sec, thus this flow could be diverted throughout the year. River B is seasonal and irrigation can only take place during the rainy season between November and

Figure 53
Streamflow hydrographs

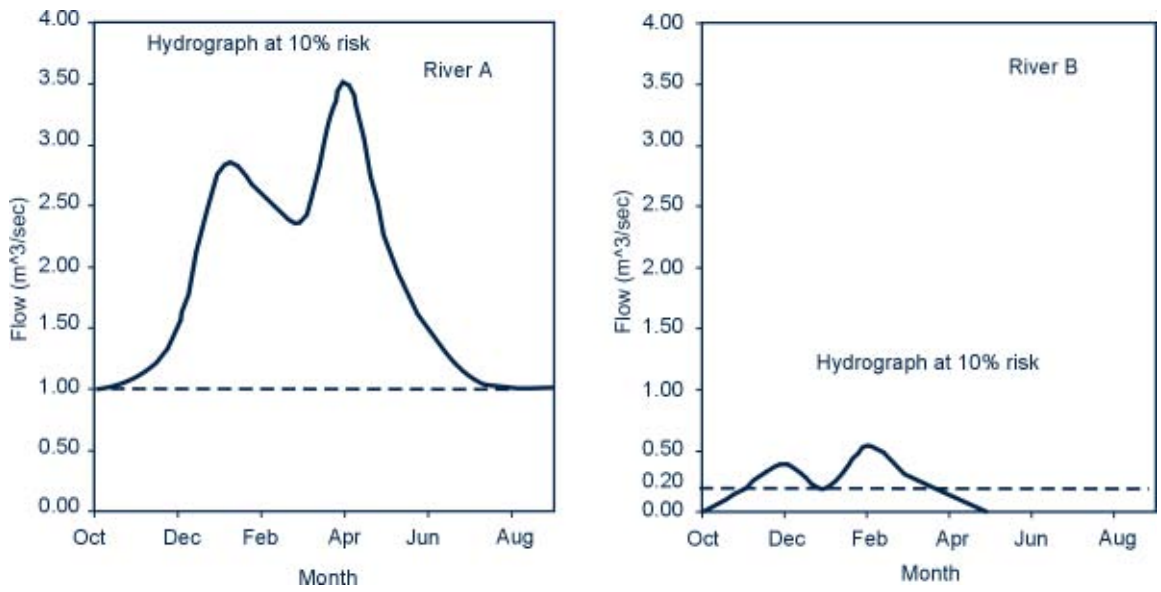

March at a safe abstraction of about 200 1/sec. However, reservation for other purposes (municipal, industrial, environmental) also has to be considered.

The feasibility of using rivers for irrigation can be determined by a statistical analysis of long-term river flows. For most major rivers, these data are available from the departments or organizations responsible for hydrological data such as the Ministry of Forestry and Water Affairs in South Africa or National Water Authorities in other countries.

For most smaller rivers no flow measurements are available. It is thus difficult to determine the water flow during the growing seasons. Nevertheless, a clear indication is needed, especially during the latter part of the dry season when minimum river flow normally coincides with maximum evapotranspiration. There are ways of obtaining some idea about the flow regime, such as by talking to local (preferably elder) people, visiting the area during the dry season, analyzing satellite imagery data (remote sensing) and by carrying out flow measurements with current meters or isotope and salt dilution methods. Whether data are available or not, one has to come up with a safe water yield, which in turn determines the possible irrigation area. Once this is known, one should apply for an appropriate water right or water abstraction permit from the relevant authority in the country.

It is equally important to have knowledge of high floods in order to properly design diversion structures and flood protection works near the river. Again, it is useful to talk to the local people, who can often indicate flood marks, for example on trees.

Many rivers carry large amounts of sediments especially during the rainy season. This has to be verified and, if so, the designs of the headworks have to cater for sediment flushing arrangements to avoid it entering the canal system.

The stability of especially meandering rivers has to be considered in order to avoid placing headworks in unstable parts of the river.

4.3. Dams and reservoirs

Where rivers do not provide sufficient baseflow for irrigation, storage structures could be built in order to balance river flows, not only throughout the year but also over sequences of several years.

4.3.1. Sedimentation

The amount of sedimentation depends on many aspects, including soil type, climate, slopes, vegetation cover, deforestation, livestock, population pressure and management practices in the catchment area of a dam. Sedimentation can cause serious problems to dams, particularly small ones, or weirs, as the reservoirs could fill up rapidly. A simple calculation of how to determine sedimentation of dams is shown later.

The source of all sediment is the land in the catchment area of the dam. Sediment that enters the river system is transported either as bed load or as suspended load. Bed load comprises the larger (sand) particles that are swept along or close to the riverbed. This type of load accounts for approximately 10% of the total sediment in the river.

Figure 54
Sedimentation in a reservoir created by a dam

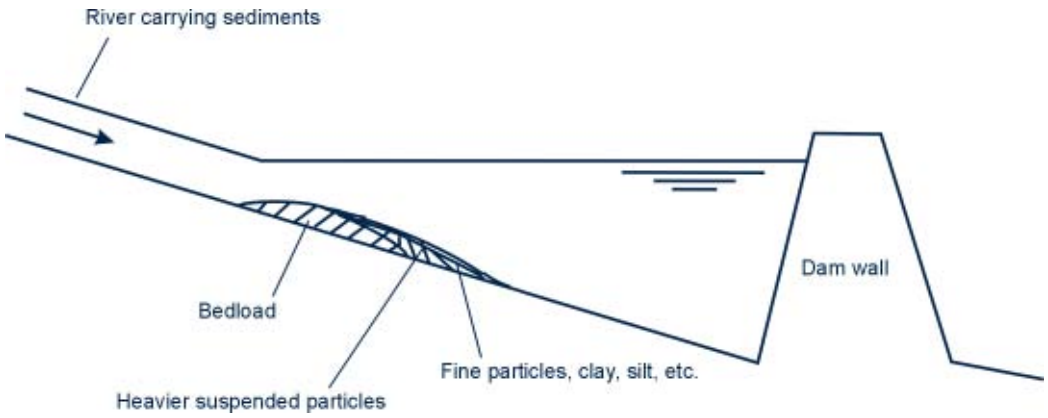

Suspended load includes all finer particles like silt and clay. These materials are carried in suspension and will only settle down when the flow is slowed down, for example in a reservoir created by a dam (Figure 54). In general, the bed load is deposited first at the tail end of the reservoir, after which respectively the heavier and lighter suspended materials settle.

Sometimes fine mud settles out on top of the coarser materials at the end of the flood season since the flow, in most cases, will be very much reduced. The mud is relatively impermeable, which can cause impermeable layers with no free movement of water between the layers, thus resulting in the river completely drying up during the dry seasons. There are cases where small reservoirs behind dams and weirs are filled with sand and alluvium, which would still allow abstraction of water, as approximately 30% of the reservoir volume remains filled with water. In such cases, abstraction can be done through sand abstraction. A series of screens or slotted pipes are buried below the water table in the sand and attached to a pump, which pumps the water from the sand. It should be noted, however, that dams are not constructed to be used for sand abstraction. Sand abstraction schemes are mostly carried out in riverbeds with significant amounts of sand or alluvium.

The reservoir trap efficiency is a measure of the proportion of the total volume of sediment that is deposited in a reservoir to that which enters the reservoir. The total volume of sediment entering a reservoir each year will be the product of the sediment concentration in the water, the mean annual runoff and the catchment area:

- *Sediment concentration (SC)*: This depends on how well preserved the catchment area is. Three categories are often used, namely sediment concentrations of 3 000 mg/l (3 kg/m^3), 5 000 mg/l (5 kg/m^3) and 10 000 mg/l (10 kg/m^3).
- *Catchment area (CA)*: This is the total land area contributing runoff into the reservoir (km^2).
- *Mean annual runoff (MAR)*: This is the average net runoff, expressed as a depth of water over the dam's catchment area (mm).

The mean annual inflow into the reservoir (MAI) is expressed as follows:

Equation 30

$$MAI = CA \times MAR$$

Where:

MAI	=	Mean annual inflow into the reservoir (m^3)
CA	=	Catchment area behind the dam (m^2)
MAR	=	Mean annual runoff (m)

The trap efficiency is related to the gross storage ratio, which is expressed as follows:

Equation 31

$$SR_g = \frac{DC}{MAI}$$

Where:

SR_g	=	Gross storage ratio
DC	=	Gross dam capacity (m^3)
MAI	=	Mean annual inflow into the reservoir (m^3)

For large dams with a gross storage ratio of at least 0.10, the trap-efficiency is 100%, as it is assumed that all the sediment will be settled (Figure 55). For very small dams, there will be almost continuous spilling and only the bed load will settle, thus the trap efficiency will be 10%.

Figure 55
Trap efficiency

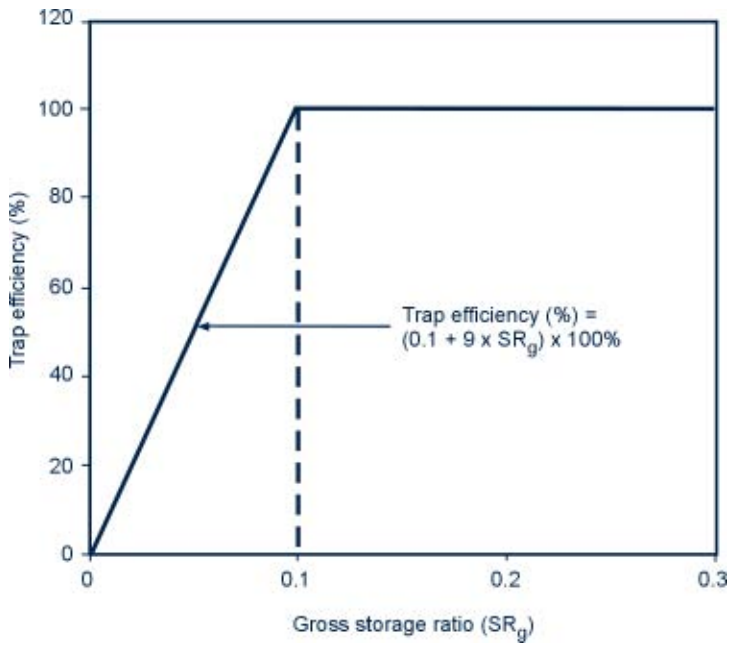

The above assumes that no measures have been taken to avoid sediments from entering the reservoir, for example through the construction of a silt trap, which would be a good solution if it is desilted or cleaned regularly, or a small dam upstream of the main dam, which would serve as a silt trap.

It can be calculated that for dams with a gross storage ratio smaller than 0.10, approximately 50% of the capacity is lost due to sedimentation in 20 average years when the river sediment concentration is 5 000 mg/l. For a sediment concentration of 10 000 mg/l, 50% of the capacity will be lost within 10 years. Therefore, it should be avoided to construct reservoirs with a storage ratio smaller than 0.10.

The mass of sediments entering the reservoir each year through the river water is expressed as follows:

Equation 32

$$SM = MAI \times SC$$

Where:

SM	=	Sediment mass entering the reservoir annually (kg)
MAI	=	Mean annual inflow into the reservoir (m^3)
SC	=	River sediment concentration (kg/m^3)

For dams with a storage ratio exceeding 0.10 and with a river with a sediment concentration of 5 000 mg/l, it can be calculated that the sedimentation in 20 years approximates 6.5% of the mean annual inflow. This volume should be deducted from the reservoir gross capacity in order to be able to irrigate a given area for at least 20 years, without being forced to reduce the irrigation area due to reduced yield.

The volume of sediments depositing in the reservoir every year can be calculated using the following equation:

Equation 33

$$SV = \frac{SM}{\delta}$$

Where:

SV	=	Sediment volume deposited in the reservoir annually (m^3)
SM	=	Sediment mass entering the reservoir annually (kg)
δ	=	Density of deposited sediments (kg/m^3)

4.3.2. Dam yields

The dam yield (Q) is defined as the volume of water in m^3 that can be drawn from a reservoir behind a dam for use each year, at the designated risk level.

The following parameters are used in the estimation of dam yield:

- Dam catchment area CA (km^2)
- Mean annual runoff MAR (mm)
- Gross mean annual inflow into the reservoir MAI: the product of CA and MAR (m^3)

Example 10

Given:

- *Catchment area (CA)* = *148 km²*
- *Mean annual runoff (MAR)* = *40 mm*
- *Gross dam capacity (DC)* = *1 700 000 m³*
- *Sediment concentration (SC)* = *5 000 mg/l or 5 kg/m³*
- *Density of deposited sediments (d)* = *1 550 kg/m³*

What is the volume of the reservoir that is lost yearly to sedimentation?

- Gross mean annual reservoir inflow (MAI) = $(148 \times 10^6) \times (40 \times 10^{-3})$ = 5 920 000 m³
- Gross storage ratio (SR_g) $= \frac{1\,700\,000}{5\,920\,000} = 0.29$

⇒ Trap efficiency = 100%, since the storage ratio > 0.1

The deposit of sediment in an average year in kg will be equal to the gross mean annual inflow in m³ multiplied by the sediment concentration.

Thus, the mass of sediments in the inflowing river water per year is:

$SM = (5.92 \times 10^6\ m^3) \times (5\ kg/m^3) = 29.6 \times 10^6\ kg$

The volume occupied by the sediment per year is:

$$SV = \frac{29.6 \times 10^6}{1\,550} = 19\,100\ m^3$$

This is the volume of reservoir or water lost to sedimentation yearly.

- Evaporation E: the annual net water loss from a free water surface (mm)
- Maximum reservoir surface area A: the surface area of reservoir when water is at full supply level (ha)
- Coefficient of variation CV: a mathematical measure of the variability of runoff from year to year. It is the ratio of standard deviation of annual inflow to the mean annual inflow. A low CV indicates regular inflow and high chances of meeting a particular yield and, conversely, a high CV implies that the chances of meeting a particular yield are less. CV can be expressed in % or in decimals
- Net storage ratio SR_n: the ratio of live storage capacity U to gross mean annual inflow MAI

Equation 34

$$SR_n = \frac{U}{MAI}$$

Where:

SR_n = Live storage ratio
U = Live storage capacity (m³)
MAI = Mean annual inflow into the reservoir (m³)

The live storage capacity is defined as:

Equation 35

$$U = DC - DS - SA$$

Where:

U = Live storage capacity (m³)
DC = Gross dam capacity (m³)
DS = Dead water storage below the outlet level (water which can not be abstracted) (m³)
SA = Sediment allowance over a chosen period (m³)

The catchment area and the maximum reservoir surface area can usually be determined from maps with contour lines at a scale of 1:50 000 for example. The storage capacity of the dam could also be determined from such maps, although a reservoir survey often has to be carried out to obtain more accurate data on the storage capacity.

Inflow characteristics consist of the MAR and CV of the annual runoff. In most countries, estimates of MAR and CV are given for each sub-catchment area or hydrological sub-zone. An example of such data for Zimbabwe is given in Table 11.

Table 11

Example of hydrological data from Gwayi catchment in Zimbabwe

Sub Zone	Name of Sub Catchment	CA (km^2)	MAR (mm)	CV	MAI (10^3 m^3)	Annual dam potential			Total potential			Current utilization	
						Storage (10^3 m^3)	Yield (10^3 m^3)	Unit Yield (mm)	Storage (10^3 m^3)	Yield (10^3 m^3)	Unit Yield (mm)	Storage (10^3 m^3)	Yield (10^3 m^3)
(1)	(2)	(3)	(4)	(5)	(6)=(3)x(4)	(7)	(8)	(9)=(8)/(3)	(1)	(11)	(12)=(11)/(3)	(13)	(14)
B1	Bembezi	3 872	10	0.90	39 000	5 850	4 680	1.209	78 000	23 010	5.94	6 272	2 091
B2	Bembezi	2 316	8	0.90	19 000	2 850	2 280	0.984	38 000	11 210	4.84	4 260	1 549
B3	Bembezi	1 576	36	1.27	57 000	2 280	1 824	1.157	114 000	26 733	16.94	28 930	9 395
D	Lower Gwayi	3 343	18	1.50	60 000	600	480	0.143	120 000	25 200	7.54	2 271	878
G1	Lower Gwayi	4 471	5	1.00	22 000	2 420	1 936	0.433	44 000	12 100	2.71	2 233	1 708
G2	Upper Gwayi	3 087	7	0.90	22 000	3 300	2 640	0.855	44 000	12 980	4.20	0	0
G3	Upper Gwayi	3 041	18	1.50	55 000	550	440	0.145	110 000	23 100	7.60	33 437	9 905
G4	Upper Gwayi	1 613	5	1.40	8 000	160	128	0.079	16 000	3 520	2.18	436	145
G5	Upper Gwayi	1 553	19	1.50	30 000	300	240	0.154	60 000	12 600	8.11	16 605	4 919
G6	Upper Gwayi	2 003	19	1.50	38 000	300	304	0.152	76 000	15 960	7.97	9 880	2 881
IN	Lower Gwayi	1 008	20	1.45	20 000	300	240	0.238	40 000	8 600	8.53	1 597	724
K	Nata	16 785	4	1.50	67 000	670	536	0.032	134 000	28 410	1.68	6 496	2 165
L	Lower Gwayi	2 091	18	1.50	38 000	380	304	0.145	76 000	15 960	7.63	2 395	1 282
M	Lower Gwayi	3 968	22	1.40	87 000	1 740	1 392	0.351	174 000	38 280	9.65	1 783	778
N	Nata	3 173	15	1.50	48 000	480	384	0.121	96 000	20 160	6.35	19 852	5 127
R	Lower Gwayi	1 794	20	1.40	36 000	720	576	0.321	72 000	15 840	8.83	502	167
S1	Shangani	3 129	14	0.90	44 000	6 600	5 280	1.687	88 000	25 960	8.30	190	617
S2	Shangani	3 966	8	1.20	32 000	1 600	1 280	0.322	64 000	15 680	3.95	5 114	8 619
S3	Shangani	4 727	25	1.20	118 000	5 900	4 720	0.999	236 000	27 820	12.23	28 666	10 411
S4	Shangani	1 317	15	1.50	20 000	200	160	0.121	40 000	8400	6.38	1 353	537
S5	Shangani	1 704	25	1.25	43 000	1 720	1 376	0.808	86 000	20 425	11.99	7 626	2 874
S6	Shangani	3 036	23	1.40	70 000	1 400	1 120	0.369	140 000	30 800	10.14	53 503	10 752
T	Nata	3 356	13	1.50	44 000	440	352	0.105	88 000	18 480	5.51	16 494	2 457
Z1	Lower Gwayi	2 734	20	1.00	55 000	6 050	4 840	1.770	110 000	30 250	11.06	994	2025
Z2	Lower Gwayi	6 458	40	1.30	258 000	7 740	6 192	0.959	516 000	118 680	18.38	425	142
	TOTAL	**86 121**			**1 330 000**	**54 550**	**43 704**		**2 660 000**	**620 158**		**251 314**	**82 148**
	AVERAGE		**17.08**					**0.520**			**7.95**		

Table 12
Yield/Live Storage Ratios (MEWRD, 1988)

Evaporation Index (EI)	Net Storage Ratio (SR_n = U/MAI)	Yield/Live Storage (Q/U) Ratio at 10% Risk		
		CV = 0.8	CV = 1.0	CV = 1.2
0.2	0.1	0.88	0.88	0.68
	0.2	0.63	0.63	0.52
	0.3	0.54	0.54	0.46
	0.4	0.49	0.49	0.43
	0.5	0.46	0.46	0.42
0.3	0.1	0.83	0.83	0.63
	0.2	0.78	0.58	0.46
	0.3	0.62	0.48	0.41
	0.4	0.53	0.43	0.38
	0.5	0.48	0.41	0.37
0.5	0.1	0.72	0.72	0.52
	0.2	0.67	0.47	0.36
	0.3	0.51	0.38	0.31
	0.4	0.43	0.34	0.29
	0.5	0.39	0.31	0.28
0.7	0.1	0.61	0.61	0.43
	0.2	0.56	0.38	0.27
	0.3	0.42	0.29	0.22
	0.4	0.34	0.25	0.20
	0.5	0.30	0.22	0.20
1.0	0.1	0.47	0.47	0.29
	0.2	0.42	0.25	0.15
	0.3	0.28	0.17	0.11
	0.4	0.22	0.13	0.09
	0.5	0.17	0.10	0.09

In our example of Zimbabwe, if the net annual evaporation is not available from direct measurements, it can be estimated at 1 800 mm per annum or 1 350 mm over a nine month dry season. In the calculations of the dam yields, only nine months of evaporation are used as it is assumed that over a period of the three rainy season months the evaporation is compensated by inflow.

When all these data are available, the yield at 10% risk can be calculated as shown in Example 11, utilizing Table 12. It is noted that the method shown in Example 11 is only suitable for dams with a net storage ratio SR_n below 0.5. The method for higher storage ratios will be discussed later.

The evaporation index is defined as follows:

Equation 36

$$EI = \frac{E \times A \times 10^4}{U}$$

Where:

EI = Evaporation Index
E = Evaporation over the dry months (m)
A = Reservoir surface area (ha)
U = Live storage capacity in (m^3)

The method described in this example does not apply to situations where SR_n is above 0.5. In those cases, the method discussed in Example 11 can be used to estimate the reservoir yields. This method is described in more detail in MEWRD (1984) It makes use of five sets of yield curves (Figure 56). These curves, for different CVs, have been computed for constant annual draw-off, assuming that all inflow into the dam takes place during the first three months of the hydrological year (the rainy season) and that there is no usable inflow for the remainder of the year.

Example 11

A dam along a river in sub-zone Z2 in Lower Gwayi sub-catchment (Table 11) within the Gwayi Catchment in Zimbabwe has the following characteristics:

- Gross dam capacity (DC) = 1 700 000 m^3
- Reservoir surface area (A) = 51.6 ha
- Catchment area (CA) = 148 km^2
- Mean annual runoff (MAR) = 40 mm (sub-zone Z2, Table 11)
- Coefficient of variation (CV) = 1.2
- Sedimentation concentration (SC) = 5 000 mg/l or 5 kg/m^3
- Sediment allowance 20 years (SA) = 6.5% of MAI

What is the dam yield at 10% risk?

- Gross mean annual inflow (MAI) = $(148 \times 10^6) \times (40 \times 10^{-3}) = 5\ 920\ 000\ m^3$
- Gross storage ratio (SR_g) = $\frac{1\ 700\ 000}{5\ 920\ 000} = 0.29$
- Trap efficiency = 100%, since storage ratio > 0.10
- Sediment allowance (SA) (20 yrs) = 0.065 x 5 920 000 = 384 800 m^3
- Live storage capacity (U) = 1 700 000 - 384 800 = 1 315 200 m^3
- Net storage ratio (SR_n) = $\frac{1\ 315\ 200}{5\ 920\ 000} = 0.22$
- Evaporation Index (EI) = $\frac{1.35 \times 51.6 \times 10^4}{1\ 315\ 200} = 0.53$

Substituting the SR_n and EI values into Table 11 shows that the yield/live storage (Q/U) ratio at 10% risk is approximately 0.34 for CV = 1.2. This figure is obtained by double interpolation. The Q/U ratio is first calculated for EI = 0.5 and 0.7 for SR_n = 0.22 (by interpolation of the Q/U ratio). Secondly, the Q/U ratio is also interpolated for EI = 0.53:

$$EI = 0.5 \text{ and } SR_n = 0.22 \Rightarrow Q/U \text{ ratio} = 0.36 - \frac{(0.22 - 0.20)}{(0.3 - 0.2)} \times (0.36 - 0.31) = 0.35$$

$$EI = 0.7 \text{ and } SR_n = 0.22 \Rightarrow Q/U \text{ ratio} = 0.27 - \frac{(0.22 - 0.20)}{(0.3 - 0.2)} \times (0.27 - 0.22) = 0.26$$

$$EI = 0.53 \text{ and } SR_n = 0.22 \Rightarrow Q/U \text{ ratio} = 0.35 - \frac{(0.53 - 0.50)}{(0.7 - 0.5)} \times (0.35 - 0.26) = 0.34$$

Thus, the yield at 10% risk for a yield/live storage ratio of 0.34 is calculated as follows:

$$\frac{Q}{U} = 0.34 \Rightarrow Q = 0.34 \times 1\ 315\ 200 = 447\ 168\ m^3$$

The data required for the computation of the dam yield Q are:

- Mean annual inflow into the reservoir MAI = CA x MAR (10^3 m^3)
- Coefficient of variation of annual inflow CV (%)
- Evaporation factor EF, defined as:

Equation 37

$$EF = \frac{(e \times A)^3}{(0.7 \times U)^2}$$

Where:

- EF = Evaporation factor
- e = Net evaporation per year, which is the annual evaporation minus minimum rainfall (m)
- A = Reservoir surface area at full supply level (ha)
- U = Full supply or live storage capacity (10^3 m^3)

After the net storage ratio (SR_n) and the MAI/EF ratio have been calculated, Figure 56 is used to determine the Q/MAI ratio, after which the yield at 10% risk can be calculated.

Figure 56

Yield curves for dams with storage rations greater than 0.5

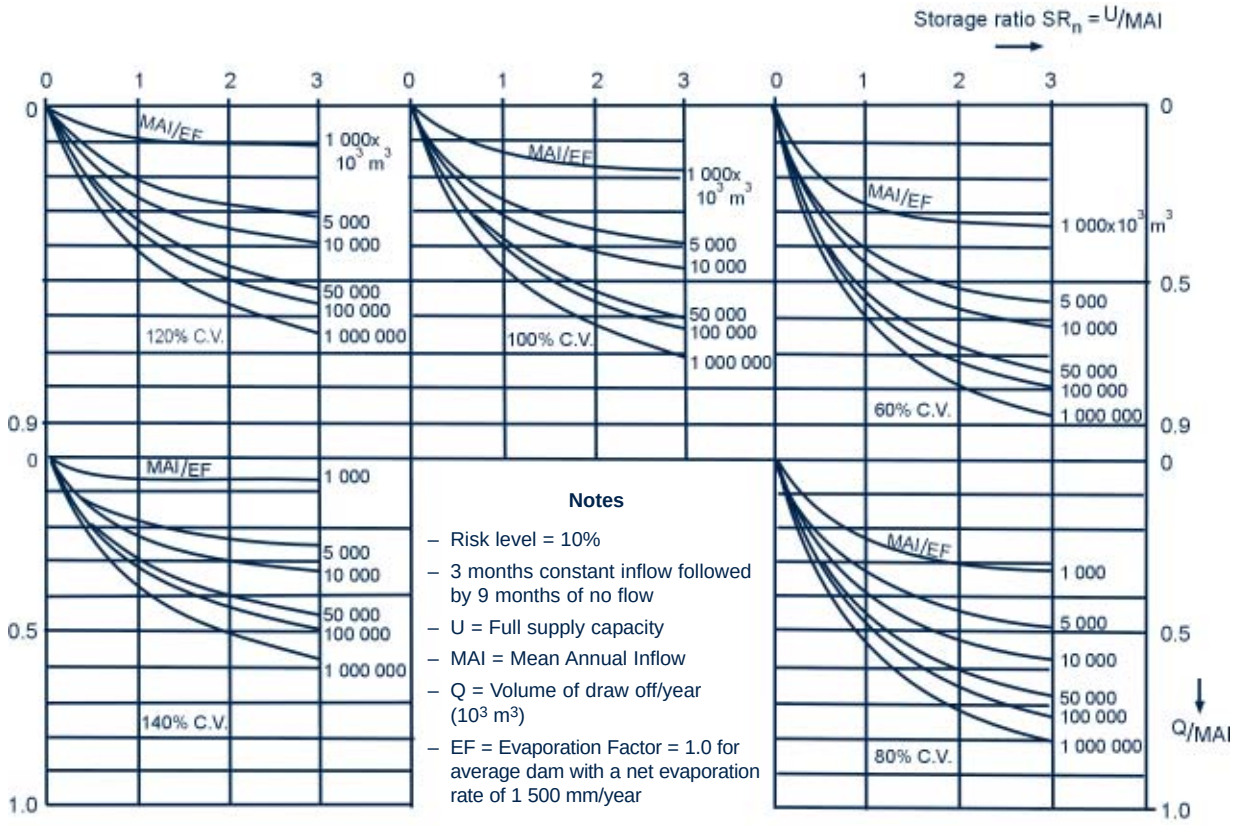

Example 12

Given:

- *Live storage capacity (U)* = *274 000 x 10^3 m^3*
- *Reservoir surface area (A)* = *2 030 ha*
- *Annual evaporation* = *2 000 mm*
- *Annual minimum rainfall* = *400 mm*
- *Mean annual inflow (MAI)* = *CA x MAR = 250 000 x 10^3 m^3*
- *Coefficient of variation (CV)* = *80%.*

What is the dam yield at 10% risk level?

- $e = 2 - 0.4 = 1.6$ m
- $EF = \frac{(1.6 \times 2\,030)^3}{(0.7 \times 274\,000)^2} = 0.93$
- $SR_n = \frac{274\,000 \times 10^3}{250\,000 \times 10^3} = 1.10$
- $\frac{MAI}{EF} = \frac{250\,000 \times 10^3}{0.93} = 269\,000 \times 10^3\ m^3$

Reading the calculated values in the bottom right curve of Figure 56 (CV = 80%) gives a ratio for $\frac{Q}{MAI} = 0.53$

Therefore the yield at 10% risk is:

$Q = 0.53 \times (250\,000 \times 10^3)\ m^3 = 132\,500 \times 10^3\ m^3$

Once the yield at 10% risk has been calculated with any of the above methods, the yield at 4% and 20% risk can be estimated by the following rules of thumb:

Equation 38

Q at 4% risk = (Q at 10% x 0.9) - (0.03 x MAI)
Q at 20% risk = (Q at 10% x 1.03) + (0.06 x MAI)

Where:
Q = Dam yield (m^3)
MAI = Mean annual inflow into reservoir (m^3)

Most dams are used for both primary (municipal) and irrigation purposes. As these purposes have different risk levels (see Section 4.1), calculations have to be made to determine how much water will be available for irrigation at 10% risk, taking into account the municipal water requirements at 4% risk.

The equation to use is:

Equation 39

$$WA_{irr} = \frac{\text{Q at 10\% risk}}{\text{Q at 4\% risk}} \times \left(\text{Q at 4\% risk - water need for primary purposes at 4\% risk}\right)$$

Where:
WA_{irr} = Water availability for irrigation per year (m^3)
Q = Dam yield (m^3)

Example 13

What is the dam yield of Example 12 at 4% and 20% risk levels respectively?

Q at 4% risk = (132 500 x 10^3 x 0.9) - (0.03 x 250 000 x 10^3) = 55 750 x 10^3 m^3
Q at 20% risk = (132 500 x 10^3 x 1.03) + (0.06 x 250 000 x 10^3) = 151 475 x 10^3 m^3

Example 14

Given:

- *Q at 10% risk = 447 168 m^3*
- *MAI = 5 920 000 m^3*
- *Primary water demand = 200 m^3/day or 73 000 m^3 per year*

What is the water available for irrigation at 10% risk?

- Q at 4% risk is: (447 168 x 0.9) - (0.03 x 5 920 000) = 224 851 m^3
- WA_{irr} at 10% risk is: $\frac{447\ 168}{224\ 851}$ x (224 851 - 73 000) = 301 990 m^3

Chapter 5
Groundwater resources

Groundwater is an important source of water supply for domestic, industrial and agricultural purposes if it occurs in adequate quantities of appropriate quality. It is invariably crucial for semi-arid to arid regions as, in most cases, it forms the only source of potable water. In Sub-Saharan Africa, most rural communities rely on groundwater for their safe daily water needs. While there is a general notion that groundwater is the primary or main source of water in semi-arid to arid regions, with surface water being the main source in humid regions, this is not that true. In Europe, for example, groundwater plays an important role as a source of municipal water supplies and even for irrigation purposes.

The utilization of groundwater resources preceded the knowledge and understanding of its occurrence and dynamics. Lack of such information inevitably resulted in groundwater overexploitation (mining), in some instances accompanied by the deterioration of its quality. The appreciation of groundwater as an important resource emanates from the understanding of the hydrologic cycle.

5.1. Groundwater resources and the hydrologic cycle

Groundwater is an important and integral part of the hydrologic cycle. Thus it cannot be developed without paying heed to other components of the cycle, as this could result in the upsetting of the water balance, possibly leading to disastrous environmental and human effects.

The interdependence and continuous circulation of all forms of water between ocean, atmosphere and land is known as the hydrologic cycle (Figure 57).

It is apparent from Figure 57 that a catchment must be envisaged as a combination of both surface drainage area and the subsurface soils, and the underlying geological formations.

Figure 58 provides the diagrammatic introduction to the hydrologic terminology. The rectangular boxes represent storage and the hexagonal boxes represent water movement.

Table 13 shows data that reflect the quantitative importance of groundwater relative to other components of the hydrologic cycle.

The oceans and seas comprise 94% of the earth's total water volume. This water is highly saline and can only be put to use after employing expensive desalinization processes. Removing this water from consideration would leave groundwater accounting for about two thirds of the fresh water resources of the world. Considering the availability of the fresh water (minus the icecaps and the glaciers), groundwater would comprise almost the total volume. However, average residence times tend to compromise the volumetric superiority, as they are quite high in certain instances such as deep groundwater. The spatial distribution of groundwater will be looked at under groundwater occurrence (Section 5.2).

Figure 57
The hydrologic cycle

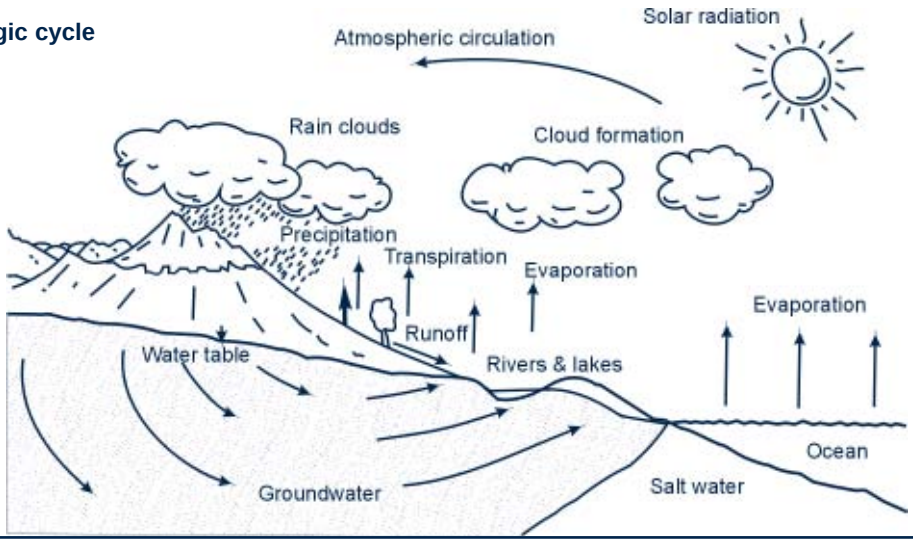

Figure 58
Systems representation of the hydrologic cycle (Adapted from: Freeze and Cherry, 1979)

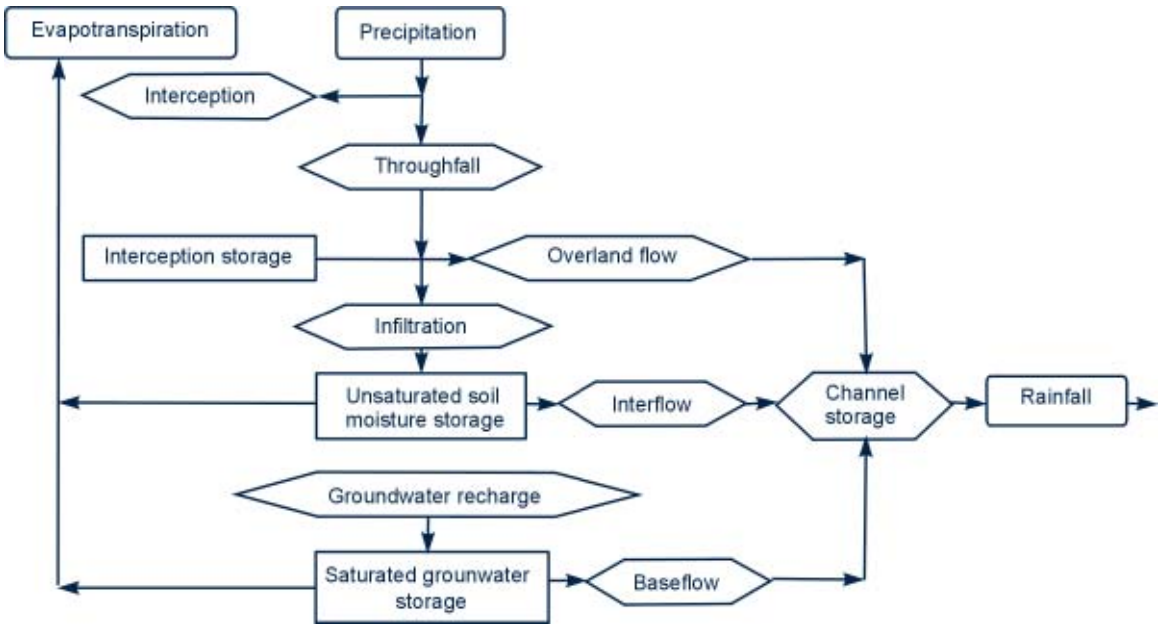

Table 13
Estimate of the water balance of the world (Source: Nace, 1971)

Parameter	Surface area (km^2) x 10^6	Volume (km^3) x 10^6	Volume (%)	Equivalent depth (m)*	Residence time
Oceans and seas	361	1 370	94	2 500	≈ 4 000 years
Lakes and reservoirs	1.55	0.13	<0.01	0.25	≈ 10 years
Swamps	<0.1	<0.01	<0.01	0.007	1-10 years
River channels	<0.1	<0.01	<0.01	0.003	≈ 2 weeks
Soil moisture	130	0.07	<0.01	0.13	≈ 2 weeks-1year
Groundwater	130	60	4	120	≈ 2 weeks-10 000 years
Icecaps and glaciers	17.8	30	2	60	10-1 000 years
Atmospheric water	504	0.01	<0.01	0.025	≈ 10 days
Biospheric water	<0.1	<0.01	<0.01	0.001	≈ 1 week

* *Computed as though storage were uniformly distributed over the entire surface of the earth*

5.2. Groundwater occurrence

The occurrence of groundwater is controlled, inter alia, by the prevailing geological conditions. Groundwater comprises all water that infiltrates and saturates subsurface geological formations. Aquifers form important sources of groundwater.

5.2.1. Aquifers

An aquifer is defined as a saturated geological formation that is permeable enough to yield economic quantities of water. Aquifers are often called by their stratigraphic (geological sequence) names.

Unconsolidated sedimentary aquifers

Unconsolidated sedimentary aquifers comprise loose sedimentary units such as unconsolidated sand and gravel, products of riverine deposits known as *alluvial* or *fluvial deposits*. They occur in old river channels or flood plains of major rivers and tend to be localized. Examples of unconsolidated deposits can be found in the Save valley, along the Save river in the south eastern part of Zimbabwe where the aquifer is used for irrigation in the Middle Sabi and Musikavanhu communal areas. In South Africa, the deposits can be found, among other river channels, along the Brak River. Alluvial fans, aeolian and glacial deposits also comprise unconsolidated sedimentary aquifers. Figure 59 shows typical alluvial deposits in a flood plain.

Figure 59

Development of deposits (unconsolidated sedimentary aquifer) in a flood plain (Adapted from: Driscoll, 1986)

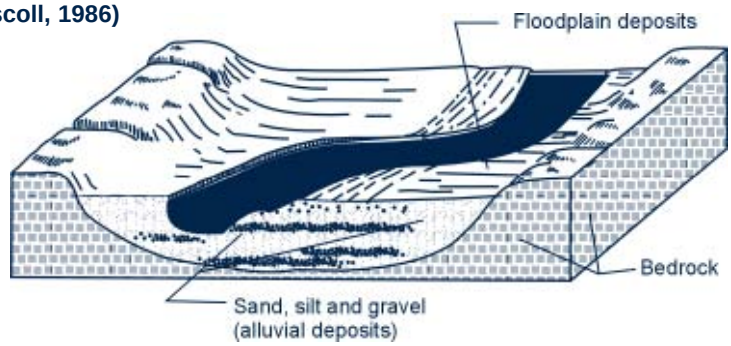

The porosities of unconsolidated sands and gravels range from 30-50% and their permeabilities (hydraulic conductivities) range from 10^{-4}-10^{-6} m/s.

Consolidated sedimentary aquifers

Consolidated sedimentary formations consist of indurated or hardened (either through pressure and/or temperature) sediments such as sandstone and carbonate rock.

In many countries sandstone formation forms extensive or regional aquifers with significant quantities of potable groundwater. Figure 60 shows an idealized sandstone aquifer.

Figure 60

An idealized sandstone aquifer (consolidated sedimentary formation) (Source: Driscoll, 1986)

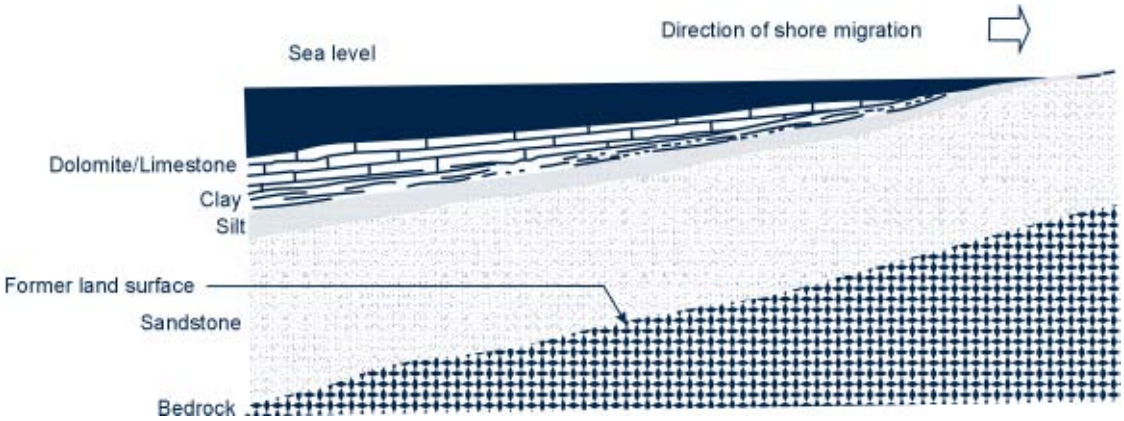

Figure 61

Schematic illustration of groundwater occurrence in carbonate rock with secondary permeability and enlarged fractures and bedding plane openings (Source: Freeze and Cherry, 1979)

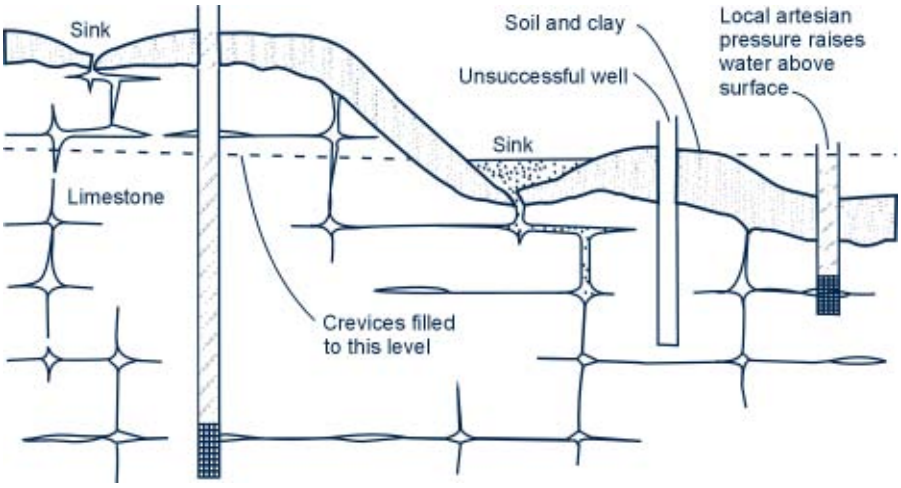

Carbonate rocks comprise limestone and dolomite consisting mostly of the minerals calcite and dolomite with very little clays. Figure 61 shows a schematic illustration of groundwater occurrence in carbonate rocks. In fractured carbonate rocks, successful and unsuccessful wells can exist in close proximity (Figure 61). It is thus imperative that geophysical investigations be carried out to locate the fracture zones. Examples of carbonate aquifers are the Lomagundi Dolomite Aquifer in northwestern Zimbabwe (Mhangura-Chinhoyi area) and the Gemsbokfontein Dolomite in Far West Rand, South Africa.

Crystalline rocks comprise mostly of igneous and metamorphic rocks and are usually solid. Weathering and fracturing increase the porosity and permeability of the rocks. One of the most characteristic features of the permeability of crystalline rocks is the general trend of permeability decreasing with depth. This will result in the well yields also decreasing with depth. Consequently, deep wells in such geological formations are not warranted.

5.2.2. Aquifer types

Aquifers are generally bounded either on top or bottom or both by either an aquitard or aquiclude. An *aquitard* is a geological unit that is more or less permeable. The unit may be permeable enough to transmit water in significant quantities when viewed over large areas and long periods, but its permeability is not sufficient to justify drilling production wells. Sandy clays and loams are typical examples. An *aquiclude* is an impermeable geological unit that does not transmit any water at all. Silt clays, dense unfractured igneous or metamorphic rocks are typical aquicludes. In nature, strictly impermeable geological units seldom occur. They all transmit water to some extent and should therefore be classified as aquitards.

There are basically three main types of aquifers: confined, unconfined and leaky (Figure 62).

Confined aquifer

A confined aquifer is bounded above and below by an aquiclude (Figure 62A). The groundwater pressure is usually higher than the atmospheric pressure and if a well is drilled into the aquifer, the water level will rise to above the top of the aquifer. In certain cases, where the water rises to above the ground or surface level, the well is referred to as a free flowing or artesian well. The level at which the groundwater level rises to is known as the piezometric surface. If the piezometric surface falls below the base of the confining aquiclude during pumping, it means that the aquifer can not sustain the discharge.

Figure 62
Various types of aquifers

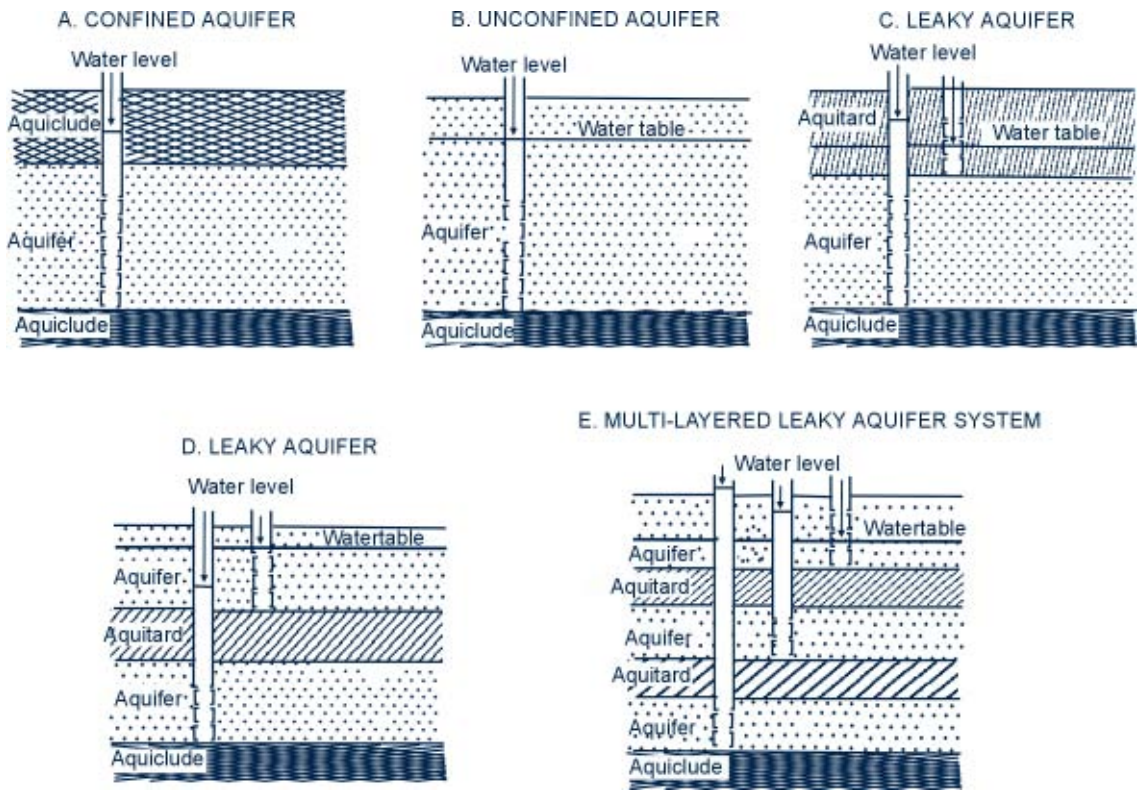

Unconfined aquifer

An unconfined aquifer, also known as a water table aquifer, is bounded below by an aquiclude and has no overlying confining layer (Figure 62B). Its upper boundary is the water level, which rises and falls freely. Water in a well penetrating an unconfined aquifer is at atmospheric pressure and does not rise above the water table. Often in sedimentary formations, an unconfined aquifer exists above a confined one, giving a multi-layered aquifer (Figure 62E).

Leaky aquifer

A leaky aquifer, also known as a semi-confined aquifer, is an aquifer whose upper boundary is an aquitard and the lower one an aquiclude (Figure 62C and 62D). It can also be a multi-layered leaky aquifer system, mentioned above (Figure 62E). Because the vertical hydraulic conductivity of an aquitard is more important than its transmissivity, groundwater is free to flow through the aquitard, either upwards or downwards, depending on the elevations of the respective water levels in the overlying and underlying aquifers. Leakage occurs from an aquifer with a water level at higher elevation to the one whose water level is at a lower level, considering the same datum line or reference point. Leaky aquifers are common is sedimentary formations.

5.3. Groundwater resources delevelopment

The development of groundwater resources, coming after the assessment (matching available water resources with the demand for the water) and the planning (integration of supply and demand), is a sequential process with various phases. Firstly, there is an *exploration* stage in which surface and subsurface geological and geophysical techniques are brought to bear on the search for suitable aquifers. Secondly, there is an *evaluation* stage that encompasses the measurement of hydrogeological parameters, the design and analysis of wells and the calculation of well yields. Thirdly, there is an *exploitation* or *development* stage and lastly, a *management* stage (see Section 5.6).

5.3.1. Groundwater exploration

Although groundwater can not be seen on the surface, a variety of techniques can provide information concerning its occurrence and even its quality. Geophysical exploration methods are used either before or during well construction and, regardless of the method used, the efficacy of each relies on the contrasting physical and physical-chemical properties of the groundwater and the aquifer material.

Surface geological methods

The initial steps of a groundwater exploration programme are carried out in the office rather than in the field (desk study) and is a rather inexpensive process. This will involve a desk study focusing on the collection, analysis and hydrogeological interpretation of available geological, topographical and hydrogeological maps, existing reports, aerial photographs, lithological logs and other pertinent records. Remote sensing data are also very crucial in hydrogeological studies. Desk studies should be complemented by field reconnaissance. Knowledge of the depositional and erosional events in an area may indicate the extent and regularity of aquifers. The type of rock will suggest the magnitude of expected water yields.

Subsurface geological methods

It is seldom sufficient to look only at the superficial manifestations of a hydrogeological environment. It is necessary to carry out test drilling, for irrigation water supplies projects, so as to better delineate subsurface conditions. Test holes provide the opportunity for geological and geophysical logging and to obtain groundwater samples for chemical analysis. They also provide the elevation of the water level. The analysis of the chemical results would give the water quality and its suitability for irrigation purposes.

Surface geophysical methods

Surface geophysical methods provide specific information on the stratigraphy and structure of the local geologic environment as well as aquifer properties. Stratigraphic data may include the types and extent of alluvial deposits and the nature and extent of the underlying bedrock (aquitard or aquiclude). Sets of data collected by surface geophysical methods are called surveys. Structural features such as faults, fractures, folds, karstic terrain and intrusions such as dykes can be located and identified by geophysical methods.

There are various geophysical methods that can be employed in groundwater exploration, such as the electrical resistivity method, the seismic refraction method and the gravity method. The first one being the most commonly used, will be discussed below.

Electrical resistivity method

This method is widely used in Southern Africa because it is cheap in comparison to other methods such as seismic refraction.

Figure 63
Schlumberger Vertical Electric Sounding (VES) electrode configuration

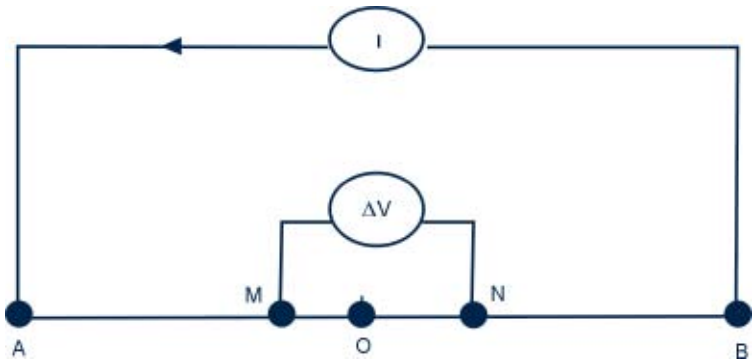

The principle of the resistivity method is based on the different abilities of various rock formations to conduct direct electrical current. The passage of the electrical current through the ground depends on the nature of the soil, rock type, moisture content or groundwater and its salinity. Geophysical investigations are carried out using the Schlumberger array, whose configuration is given in Figure 63. Direct current, I, is introduced into the ground through outer electrodes A and B. The electrical signal experiences a potential drop, ΔV, which is measured between a second pair of inner electrodes, M and N, as a result of the ground being resistive to the passage of the electrical current.

The resistance of the ground R is obtained from Ohm's law, which states that the ratio of the potential drop is proportional to the electrical current and hence $R = \Delta V/I$. This resistance can be converted to a resistivity value using a geometric factor K, which depends on the electrode configuration. By continually expanding outer electrodes symmetrically away from the midpoint, O, of the array, the current penetrates deeper and deeper and so does the depth of investigation. Owing to the heterogeneity of the ground, the resistivity measured is in fact an apparent resistivity. A log-log plot of the apparent resistivity against the current electrode spacing AB/2 produces the so-called Vertical Electrical Sounding (VES) curve. The sounding curve is interpreted in terms of layer thicknesses with corresponding resistivity values (often referred to as layer parameters) that are used to determine the aquifer geometry.

Interpretation of the measurements is done by comparing the resulting curve (semi-log plot of apparent resistivity versus current electrode spacing) against published theoretical curves for simple layered geometrics. Software exists on the market that can assist in electrical resistivity data interpretation, for example *Reinvert* and *Resixp*. The software can only produce good results if one has good data and really understands the prevailing geological conditions and the limitations of the methodology. Various lithological layers can be mapped using the method. It can also be used to locate the salt water-fresh water interface in coastal aquifers.

Lateral profiling provides areal coverage at a given depth of penetration since the electrode separations are kept fixed at each point of investigation along a profile line. The method is used to define aquifer limits or map areal variations in groundwater salinity.

Subsurface geophysical methods

Geophysical well logging, also known as *well geophysics* or *down the hole logging*, involves lowering sensing devices into a well and recording a physical parameter that may be interpreted in terms of aquifer characteristics; groundwater quality, quantity and movement; or physical structure of a borehole. The geophysical logs include resistivity, spontaneous potential, natural gamma and gamma-gamma logging.

5.3.2. Water wells

In order for groundwater to be put to use, wells have to be drilled into aquifers to bring it to the surface. A well is a hole or shaft, usually vertical, excavated or drilled into an aquifer and is properly designed and constructed. Wells may be hand dug, driven or jetted in the form of well points, bored by an auger or drilled by a drilling rig. The selection of the drilling method hinges on such questions as the purpose of the well, the hydrogeological environment, the amount of water required, the borehole depth and diameter envisaged, and the economic factors.

A number of wells, not widely spaced, drilled to tap the same aquifer so as to produce significant amounts of water, for example for irrigation, are referred to as *a well field*.

Test holes

Before drilling a well in a new area, it is common practice to initially drill a *test hole* of a much smaller diameter. The

purpose of a test hole is to determine depths to the groundwater, groundwater quality and the physical character and thickness of aquifers without the expense of a regular well, which might be unsuccessful. Lithological (geologic) logs should be collected and down the hole logging, if possible, carried out.

Drilling in semi-consolidated and consolidated (hard rock) formations

Drilling in such formations requires air-drilling systems. Compressed air (from a compressor) is piped down the drilling pipes and lifts the rock cuttings and cools the drilling bit. If the rock is competent, which means if it does not collapse or cave, the hole will be left open or uncased. Air drilling is carried out in formations such as crystalline and carbonate aquifers. In carbonate aquifers, such as limestone and dolomite, possibilities of drilling into karsts (open holes) exist whereupon loss of air circulation will be experienced.

Drilling in unconsolidated formations

Drilling in unconsolidated formations requires the stabilization of the hole as the drilling progresses. This can either be done by driving casing as the drilling progresses or by using a type of drilling mud that will seal off the hole and stabilize it for short periods. Drilling that employs mud is either direct mud rotary or reverse mud rotary drilling. The mud must be biodegradable so as to enable water to enter the well after construction. Drillfloc and Magnfloc are examples of such a mud. Bentonite mud is not recommended as a drilling mud, since it is not biodegradable and is difficult to clean away after the drilling of the well. In Zimbabwe, the direct mud rotary drilling technique is used in drilling irrigation wells in alluvial deposits.

Well casing

The casing is of a smaller diameter than the drilled hole. The casing keeps the hole open and provides structural support against caving as well as sealing out surface water and any undesirable groundwater such as saline groundwater. The casing is usually placed against the non-water bearing formations and is usually made of alloyed or stainless steel. The latter is quite expensive. PVC can also be used but is not recommended for deep holes as it is likely to break. In shallow wells (generally no more than 50 m) it is recommended to install thicker PVC.

Screens

In consolidated formations, where the material surrounding the well is stable, groundwater can enter directly into an uncased well. In unconsolidated formations, however, wells have to be installed with screens. The screens stabilize the sides of the hole, prevent sand movement into the well and allow a maximum amount of water to enter the well with minimum hydraulic resistance. Screens are usually placed against the water bearing formations.

Manufactured screens, such as the Johnson, are preferred to perforated casing because of the ability to tailor opening sizes to aquifer conditions and the larger percentage of open area that can be achieved. Several types are available: punched, stamped, louvered, wire wound perforated pipe and continuous slot wire wound screens. The latter type is most efficient. It possesses the largest open area and can be closely matched to aquifer material (Figure 64).

Hacksaw-cut or torch-cut screens are not recommended for irrigation wells as they usually have uneven and large openings, which will result in the well silting.

Figure 64
Continuous slot wire wound screen in an unconsolidated formation (Source: Todd, 1980)

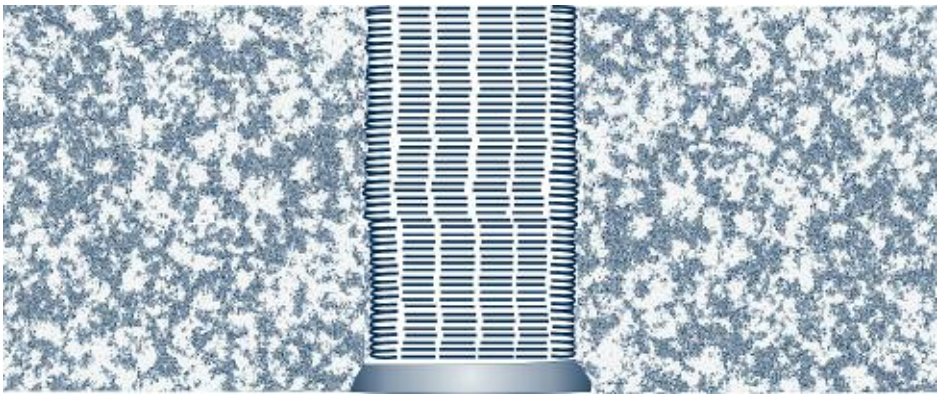

The selection of the screen diameter should be made on the basis of the desired well yield and aquifer thickness. To minimize well losses and clogging, groundwater entrance velocities should be within specified limits (Table 14).

Table 14

Optimum groundwater entrance velocity through a well screen (Source: Walton, 1962)

Hydraulic conductivity of aquifer (m/d)	Optimum screen entrance velocity (m/min)	Hydraulic conductivity of aquifer (m/d)	Optimum screen entrance velocity (m/min)
>250	3.7	80	1.8
250	3.4	60	1.5
200	3.0	40	1.2
160	2.7	20	0.9
120	2.4	<20	0.6

Hydraulic conductivity, K, is defined as the volume of water that will be transmitted through a porous medium in unit time under a unit hydraulic gradient through a unit area measured perpendicular to the flow direction. Hydraulic conductivity is sometimes referred to as permeability and has units of velocity (m/day). It depends on a variety of physical factors, including porosity, particle size and distribution, shape of particles, arrangement of particles, etc.

The formula used in the calculation of the optimum screen entrance velocity is:

Equation 40

$$V_s = \frac{Q}{c \times \pi \times d_s \times L_s \times P}$$

Where:

V_s = Optimum screen entrance velocity

Q = Well discharge (pumping rate)

c = Clogging coefficient, usually taken to be 0.5 since 50% of the screen open area is estimated to be blocked

d_s = Screen diameter

L_s = Screen length

P = % of open screen area (available from manufactures)

Gravel pack

Gravel pack is artificially emplaced in the annulus between the screens and hole walls to:

i) Stabilize the aquifer

ii) Minimize sand pumping

iii) Permit the use of a large screen slot with maximum open area

iv) Provide an annular zone of high permeability, which increases the effective radius and yield of the well

Maximum grain size of a pack should not exceed 1.0 cm, while the pack thickness should be between 8 and 15 cm. A natural pack can also be developed around the screen from the sand or gravel forming the aquifer material by removing the fine material through well development (see below).

Sanitary seal

A sanitary protection of cement grout is placed near the surface, and in the annular space between the casing and wall sides, to prevent entrance of surface water and to protect against exterior corrosion. If the groundwater is also used for human consumption, this will help in protecting its quality.

Well development

A new well is developed to increase its specific capacity (well's productivity), prevent sanding and obtain maximum economic well life. Development procedures include pumping, surging, use of compressed air and addition of chemicals in limestone or dolomite formations. A combination of these methods is often used.

5.3.3. Collector wells

Collector wells are large wells, up to about 5 m in diameter, usually constructed in unconsolidated formation such as alluvial deposits. If a collector well is constructed adjacent to a surface water source, well yields will be generally high and discharge values of up to 30 000 m^3/day are not uncommon. The well is sunk, usually by use of drilling machinery, to the requisite depth in the aquifer by excavating inside a cylindrical concrete caisson. Perforated pipes, 15-20 cm in diameter, are jacked hydraulically into the aquifer through precast portholes in the caisson to form a radial pattern of horizontal pipes, 60-100 m in length (Figure 65). During construction, fine grained material is washed into the caisson so that natural gravel pack (see above) formed around the perforations. The number, length and radial pattern of the collector pipes can be varied to obtain maximum yields; usually more pipes are extended towards than away from the surface water source.

The caisson acts as a large storage tank and one or two pumps can be installed. The large area of exposed perforations in a collector well causes low inflow velocities, which minimize incrustation, clogging, and sand transport.

Figure 65
Collector well located near a surface water body

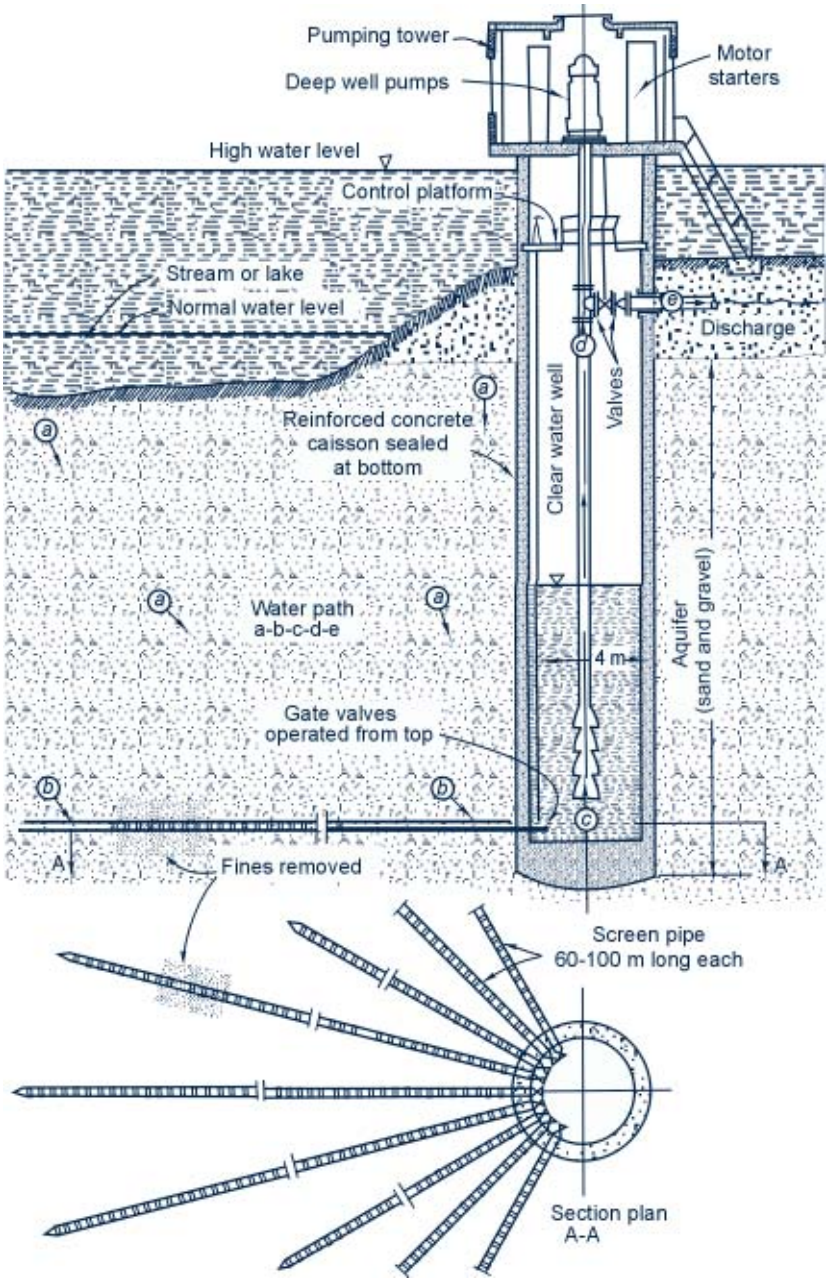

The initial cost of a collector exceeds that of a vertical well; however, advantages of large yields, reduced pumping heads and low maintenance costs are factors to be considered.

Collector wells can also be developed in aquifers removed from surface water sources. In Zimbabwe, collector wells have been developed in crystalline rock aquifers to enhance yields for domestic water supplies because ordinary small diameter wells had failed to cope with the demand, particularly during drought periods.

5.3.4. Groundwater resources evaluation

Groundwater resources evaluation focuses on, inter alia, the assessment of hydrogeologic parameters, the design and analysis of wells and the calculation of aquifer yields. Pumping or exploitation of groundwater leads to water level declines, which serve to limit yields. One of the primary goals of groundwater resources evaluation must therefore be the prediction of hydraulic head drawdowns (Section 5.4) in aquifers under proposed pumping schemes. Such information can be obtained from understanding well hydraulics (Section 5.4), which looks at the calculation of aquifer parameters discussed in Section 5.2.

5.4. Pumping tests

Pumping tests are field measurements used to gather data for the calculation of transmissivity, storativity, specific yield, leakance, well efficiency (Section 5.4.7) and the prediction of yields and drawdowns.

5.4.1. The principle

When a well is pumped, groundwater is removed from the area surrounding the well, and the water table (in unconfined aquifers) or the piezometric surface (in confined aquifers), is lowered. The drawdown, at a given point, is the distance to which the water level is lowered (Section 5.4.2) (Figure 66).

A drawdown curve shows variation of the drawdown with distance from the pumping well. In three dimensions, the drawdown curve describes a conic shape, known as the *cone of depression*. The outer limit of the cone of depression, where drawdown is zero, defines the *area of influence* of the well.

The shape of drawdown cones is dependent on the hydraulic parameters, which are transmissivity T and storativity or specific yield S of the aquifers. Fig 67 shows the various shapes for aquifers with low and high values of T and S. Aquifers of low T values develop tight, deep drawdown cones, whereas aquifers of high T values develop shallow cones of wide extent. Transmissivity exerts a greater influence on drawdown than does storativity.

If the discharge from a well and the drawdown in the well and in piezometer(s) (observation wells) placed at a known distance away from the pumping well are measured, we can substitute these into appropriate well flow equations and calculate the hydraulic characteristics of the aquifer.

Figure 66
Drawdown in a pumped aquifer (Source: Kruseman and de Ridder, 1990)

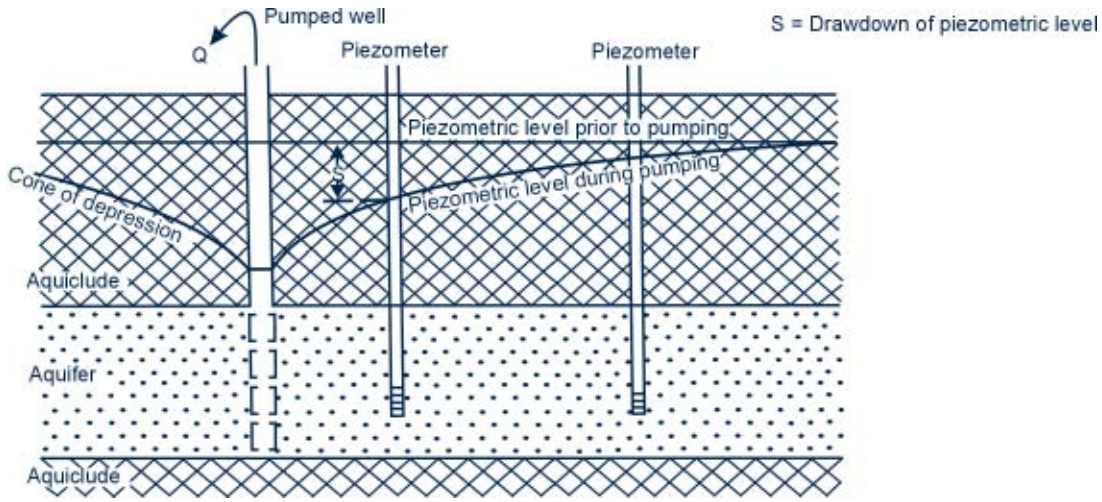

Figure 67
Drawdown curves for aquifers with high or low transmissivity and storativity values

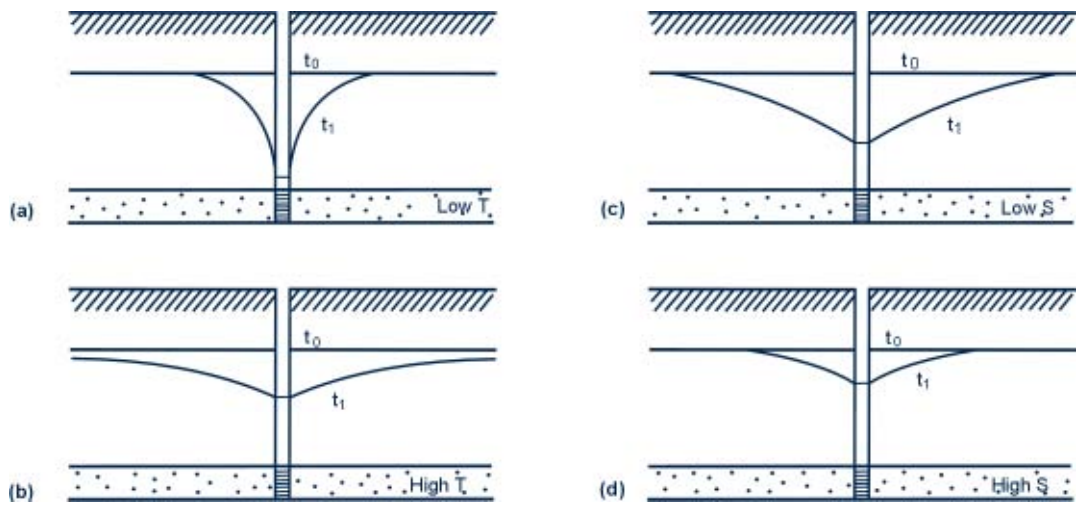

Water level (drawdown) measurements

Drawdown measurements in the well and piezometers must be measured many times during a test and with as much accuracy as possible. Because the water levels drop fast during the first hour or two of the test, the readings in this period should be made at brief intervals. As pumping continues, the intervals can be gradually lengthened. Table 15 gives a range of intervals for water level measurements in a pumping well and in piezometers.

Table 15 only gives a guideline on the range of intervals. The intervals should be adapted to the local conditions, available personnel, type of measuring device, etc. Nonetheless, readings in the first hours of the test should be frequent, because in the analysis of the test data time is usually entered in a logarithm form. Pre-printed forms with time, general well information and preferred time intervals are generally used. Automatic recorders or electric dippers are used in measuring water levels.

Discharge measurements

The discharge or pumping rate should be kept constant throughout the duration of the test and measured periodically. It can be kept constant by a valve in the discharge pipe. This is a more accurate method of control than is changing the speed of the pump. It should however, be noted that a constant discharge rate is not requisite for the analysis of pumping test data, as there other methods that take variable discharge into account.

Discharge measurements can be measured by use of a water meter, a container of known volume, an orifice weir or an orifice bucket. The choice of the measuring device is in part dependent on the type of pump and the pumping rate.

Discharge of the pumped water should be away from the area of influence of the pumping well in order to avoid recycling of the water during the test.

Duration of a pumping test

The duration of a pumping test depends on the type of aquifer and the degree of accuracy desired in establishing its hydraulic characteristics. Economizing on the period of pumping is not recommended because the cost of running a pump a few extra hours is low in comparison with the total costs of the test. It has been established that for steady state conditions (see Section 5.4.3) to be reached, the following pumping durations are required for the various aquifers:

Type of aquifer	Pumping duration
i) Leaky	15-20 hours
ii) Confined	24 hours
iii) Unconfined	3 days

It is also important to note that steady state conditions are not requisite for a pumping duration.

5.4.2. Definition of terms

It is important for one to have a clear understanding of the meaning of common terms related with pumping tests.

Static water level (SWL):
: The level at which water stands in a well before pumping takes place

Pumping water level (PWL):
: The level at which water stands in a well when pumping is in progress. It is also called the dynamic water level as it moves (declines) when the pumping rate is significant

Drawdown:
: The difference, generally measured in metres, between the water table or piezometric surface and the pumping water level (Figure 66). This difference represents the head of water that causes the groundwater to flow into the well

Table 15

Guideline to range of water level measurements in a pumping well and in piezometers

Pumping well		Piezometer	
Time from start of pumping	Measuring time intervals	Time from start of pumping	Measuring time intervals
0-5 minutes	0.5 minute	0-2 minutes	10 seconds
5-60 minutes	5 minutes	2-5 minutes	30 seconds
60-120 minutes	20 minutes	5-15 minutes	1 minute
120-shut down	60 minutes	15-50 minutes	5 minutes
	50-100 minutes	10 minutes	
		100 minutes-5 hours	30 minutes
		5 hours-48 hours	60 minutes
		48 hours-6 days	3 times a day
		6 days-shut down	Once a day

Residual drawdown:

After pumping is stopped, the water level rises and approaches the static water level observed before pumping began. This process is known as water level recovery. During water level recovery, the distance between the water level and the initial static water level is called the residual drawdown.

Well yield:

The maximum pumping rate that can be supplied by a well without lowering the water level in the well to below the pump intake.

Aquifer yield:

The maximum rate of withdrawal that can be sustained by an aquifer without causing an unacceptable decline in the hydraulic head (c.f. drawdown) in the aquifer.

Specific capacity:

This is a measure of the well's productivity and is the yield per unit drawdown. It is obtained by dividing the discharge rate of a well by the drawdown when they are both measured at the same time.

5.4.3. Hydraulic properties of confined aquifers

In order to apply well hydraulic equations, certain assumptions and conditions have to be fulfilled. These are:

- The aquifer is confined
- The aquifer has a seemingly infinite areal extent
- The aquifer is homogeneous, isotropic and of uniform thickness over the area to be influenced by the test
- The piezometric surface is horizontal, or nearly so, prior to pumping over the area that the test will influence
- The aquifer is pumped at a constant discharge rate (variable discharge rates can also be sued but are beyond the scope of this module)
- The well fully penetrates the entire aquifer thickness and thus receives groundwater by horizontal flow

If these assumptions and conditions are met then the groundwater, when it is pumped from a well, will flow towards the well under (a) *steady state or equilibrium conditions* or (b) *unsteady state conditions*.

Steady state flow

Steady state flow occurs when the change in drawdown becomes negligibly small with time or where the hydraulic gradient has become constant, which means that drawdown variations are zero. It should be noted, however, that true steady state conditions are rare in a confined aquifer. The flow equation by Theim (1906) can be used for a pumping well with two observation or monitoring wells or piezometers to obtain the aquifer transmissivity T. The equation is given by:

Equation 41

$$Q = \frac{2\pi T(s_1 - s_2)}{2.3\log(r_2 / r_1)}$$

or

$$T = \frac{2.3Q\log(r_2 / r_1)}{2\pi(s_1 - s_2)}$$

Where:

Q	=	Well pumping rate (m^3/d)
T	=	Aquifer transmissivity (m^2/d)
r_1 and r_2	=	Respective distances (r) of piezometers (m)
s_1 and s_2	=	Respective steady state drawdowns in the piezometers (m)

In order to utilize this equation, the assumptions discussed at the beginning of this section for a steady state flow to the well should be met. Theim's method can not be used to calculate the aquifer storativity S.

Procedure:

- Semi-log plots of either drawdown (s) versus time (t) or drawdown (s) versus distance (r) of the piezometers from the pumping well are constructed. Drawdown (s) is plotted on vertical axis on the linear scale and time (t) or distance (r) on the horizontal axis on a logarithmic scale.
- For a drawdown versus time plot (Figure 68), read off the steady state drawdown s_i (where i = well 1, 2, 3, etc.) for each piezometer and substitute these into Equation 40 together with the corresponding values of r and Q and then calculate T.

The value of T can also be computed using the drawdown versus distance method, which, however, will not be explained in this Module.

Unsteady state flow

When the flow of groundwater to a well is unsteady, which means that the drawdown differences with time are not negligible and that the hydraulic gradient is not constant with time, Theis's and Jacob's methods are used. These methods are not explained in detail in this Module. Theis's method uses matching log-log plots the measured data with that of appropriate theoretical curves. Jacob's method uses a similar approach as that discussed under steady state flow.

Figure 68

Drawdown versus time for 3 piezometers, located at 30, 90 and 215 m from a pumping well

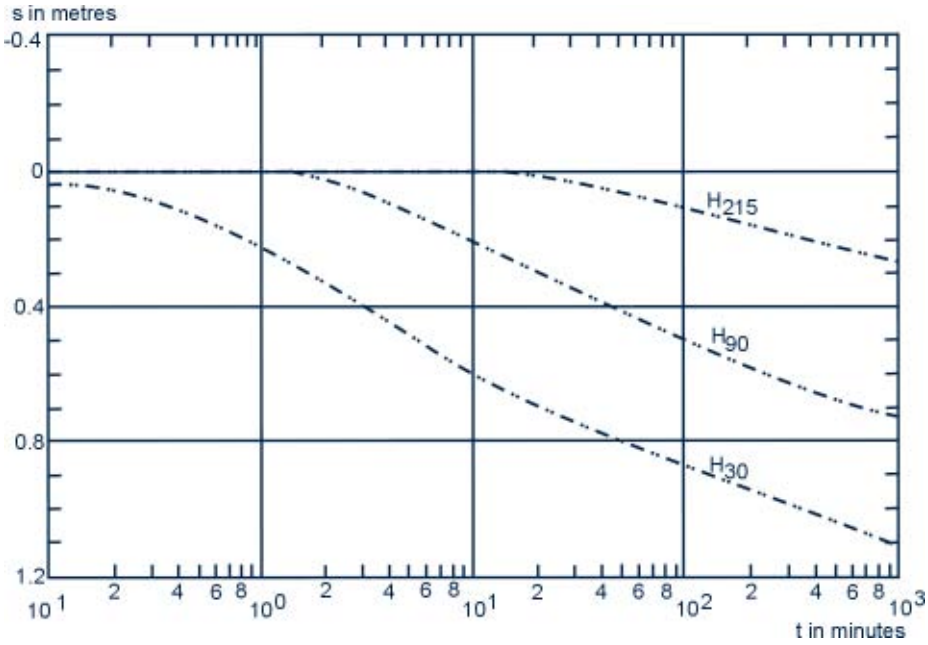

Example 15

Application of the drawdown versus time method

Given a drawdown (s) versus time (t) semi-plot, Figure 68, for a well pumped at 788 m³/d, with 3 piezometers 30, 90 and 215 m away.

What is the transmissivity T?

$$T = \frac{2.3 \times 788 \log(r_2 / r_1)}{2\pi(s_1 - s_2)}$$

It can be noticed from Figure 68 that the curves of piezometers H30 and H90 start to run parallel approximately 10 minutes after pumping began. This means that the drawdown difference between these piezometers (s_1 - s_2) remained constant from t = 10 minutes onwards, which means that the hydraulic gradient between these two piezometers remained constant, a primary condition for which the Theim's equation is valid. The drawdown curve of piezometer H_{215} does not run parallel to that of the other 2 piezometers, not at even very late pumping times. The data for this piezometer should be neglected since it does not reflect steady state conditions.

Since (s_1 - s_2) remains constant from 10 minutes onwards, any time after that can be selected to determine the (s_1 - s_2). Considering a t of 830 minutes, then s_1 = 1.088 and s_2 = 0.716 for H_{30} and H_{90} respectively ⇒

$$T = \frac{2.3 \times 788 \times \log(90 / 30)}{2 \times 3.14 \times (1\,088 - 0.716)} = 370 \text{ m}^2 / \text{day}$$

5.4.4. Hydraulic properties of leaky and unconfined aquifers

Methods of pumping test data analysis for steady and unsteady groundwater flow to a pumping well as well as the assumptions and conditions that have to be fulfilled when analyzing the data for the various aquifer types are beyond the scope of this Module. Only general information is given below and the reader is referred to more specialized literature on the subject for further reading.

Leaky aquifers

In nature, leaky aquifers occur more frequently than perfectly-confined aquifers (Section 5.2.2). There are assumptions and conditions that have to be fulfilled when analyzing data from leaky aquifers.

For proper analysis of pumping test data from a leaky aquifer, piezometers are needed in the leaky aquifer, in the aquitard and in the upper aquifer.

The De Glee and Hantush-Jacob methods are general used for steady state flow. The methods allow the characteristics of the aquifer and aquitard to be determined.

For unsteady state flow with no aquitard storage, the Walton method and Hantush inflection point method are employed. For cases where there is aquitard storage, Hantush's curve fitting and the Neuman-Witherspoon methods are used.

Unconfined aquifer

There are basic differences between confined aquifers and unconfined aquifers when they are pumped. These are:

- A confined aquifer is not dewatered during pumping (if the discharge rate is appropriate); it remains fully saturated and the pumping creates a drawdown in the piezometric surface (Figure 67). In unconfined aquifers, the saturated thickness declines as the water table is lowered
- Groundwater flow towards a fully penetrating well in a confined aquifer is horizontal, unlike that in unconfined aquifers

As for other aquifers, there are assumptions and conditions that have to be satisfied before the well hydraulic equations are employed for unconfined aquifers.

Well hydraulics equations for both steady state and unsteady state groundwater flow exist. For steady state flow, the Theim-Dupuit method is used to calculate the aquifer transmissivity. Neuman's curve fitting method is used for the calculation of unconfined aquifer hydraulic characteristics under unsteady state flow.

It should be noted that a number of computer packages for the analysis of pumping test data exist on the market. However, one has to fully understand the applicability of the various analytical methods and not use them blindly. Moreover, the importance to collect data of good quality in the field can not be over-emphasized.

It is also worth noting that there are other aquifer configurations, which require certain conditions to be met and need special analytical approach, and hence the input of experts is critical.

5.4.5. Recovery tests

When the pump is shut down after drawdown measurements, the water levels in the pumped well and piezometer(s) will start to rise. The rise in the water levels is called residual drawdown (Section 5.4.2) and is denoted s'. It is always good practice to measure the residual drawdowns immediately after pumping has stopped. Recovery test measurements allow the transmissivity T of the aquifer to be calculated, thereby providing an independent check on the results of drawdown measurements. Moreover, recovery measurements cost very little in comparison with the cost of running the pump during drawdown measurements.

The analysis of the recovery data is based on the principle of superposition, which means that the drawdown caused by two or more wells is the sum of the drawdown caused by each individual well. It is assumed that after the pump is shut, the well continues to be pumped at the same discharge as before and that an imaginary well pumps water into the aquifer (recharge well) equal to the discharge. The discharge and recharge cancel each other, resulting in an ideal well as required for the recovery period. Any of the flow equations discussed in the preceding sections can be formulated and employed. Theis's recovery method is the most widely used method for the analysis of recovery tests data.

5.4.6. Slug tests

During a slug test, a small volume of groundwater, known as a *slug*, is quickly removed from a well by use of a bailer or a bucket, after which the rate of rise of the water level in the well is measured. Instead of removing the groundwater by a bailer or bucket, a closed cylinder or other solid body can be submerged in the well and then, after the water level has stabilised, the body is pulled out. Alternatively, a small slug of water (not contaminated and of more or less the same quality as the groundwater) is poured into the well and the rise and subsequent fall of the water level are measured. From these measurements, the aquifer's transmissivity T or hydraulic conductivity K can be determined.

Enough water has to be displaced or removed to raise or lower the water level by around 10-50 cm. If the transmissivity of the aquifer is high, say 200 m^2/day, the water level will recover too quickly for accurate manual measurements and an automatic recorder will have to be used.

In a slug test, no pumping and piezometers are required. The test usually takes a few minutes or at the most, a few hours. Nevertheless, slug tests are not a substitute for conventional pumping tests. It is only possible to determine the characteristics of a small volume of aquifer material surrounding the well, and this volume is most likely to have been disturbed during drilling and construction.

For conventional slug tests carried out in confined aquifers with fully penetrating wells, curve fitting methods have been developed, among others, by Cooper *et al.* (1967) and

Papadopulos and Cooper (1973). For wells partially or fully penetrating unconfined aquifers, the Bouwer and Rice (1976) method can be used.

5.4.7. Well performance tests

A well performance test is conducted to determine losses attributed to the aquifer and the well. Aquifer losses are head losses that occur in the aquifer where the flow is laminar. These are time-dependent and vary linearly with discharge.

Well losses are divided into linear and non-linear head losses (Figure 69). Linear well losses are caused by 'damaging' or disturbing the aquifer material during drilling and they comprise, for example, head losses in the gravel pack (Section 5.3.2) and in the screen. Non-linear well losses are the friction losses that occur inside the well screen and in the suction pipe where the flow is turbulent. All these losses are responsible for the drawdown inside the well being much greater than would have been under ideal conditions. Step drawdown tests are used to determine these losses.

Step drawdown test

A step drawdown test is a test in a single well in which the well is pumped at a low constant discharge rate until the drawdown within the well stabilizes. The pumping rate is then increased and pumping continued until the drawdown stabilizes once more. The process is repeated at least three times, each of which should be of equal duration of say an hour each. The collected data are used in the computation of aquifer and well losses.

The following equation is commonly used:

Equation 42

$$s_w = BQ + CQ^2$$

Where:

s_w = Drawdown in a pumped well

B = Linear losses (assumed to be constant, see below)

C = Non-linear losses (a constant)

Q = Discharge rate

Knowing B and C, we can predict the drawdown in a well for any realistic discharge Q. B is time-dependent, but since it changes only slightly after a reasonable pumping duration, it can thus be assumed to be constant.

Figure 69
Various head losses in a pumped well (Source: Kruseman and de Ridder, 1970)

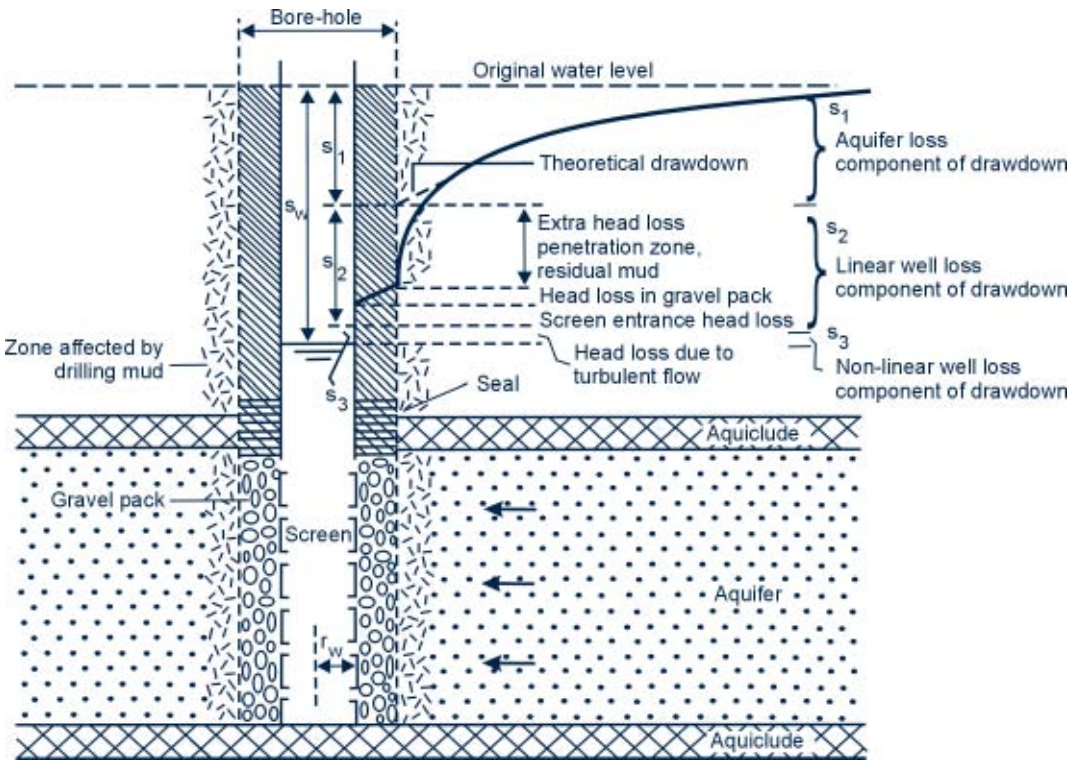

Specific capacity

Specific capacity S_c has been defined earlier (Section 5.4.2) as a measure of a well's productivity and is obtained by:

Equation 43

$$S_c = Q/s_w$$

Where:

S_c = Specific capacity
Q = Discharge rate
S_w = Drawdown measured in the field

The larger the specific capacity, the better the well. Observing the change in drawdown and specific capacity with increased discharge provides information required to select optimum pumping rates or to obtain information on the condition or efficiency of the well.

Well efficiency

Well efficiency E, expressed as a percentage, is the ratio of the theoretical drawdown s_1 to the drawdown measured in the field s_w (Figure 69) or the ratio of the field specific capacity Q/s_w to the theoretical specific capacity for a specific duration of pumping. It is given by the expression:

Equation 44

$$E = \frac{Q/s_w \times 100}{Q/s_1} = \frac{s_1 \times 100}{s_w}$$

Where:

E = Well efficiency (%)
Q = Discharge rate
s_1 = Theoretical drawdown
s_w = Drawdown measured in the field

E values close to 100% indicate an efficient well with minimal well losses. Low E values, say 40%, are indicative of poorly-constructed and poorly developed wells.

Inefficient wells can also be recognized by noting the initial recovery rate when pumping is stopped. Where the well loss is large, the drawdown recovers rapidly by drainage into the well from the surrounding aquifer. A rough rule of thumb for this purpose is:

If a pump is shut off after 1 hour of pumping and 90% or more of the drawdown is recovered after 5 minutes, the well can be considered unacceptably inefficient.

Well inefficiency is caused by the following factors, which can be grouped into two classes:

i) Design factors:
   - The choice of screens with insufficient open area results in high entrance velocities causing higher than normal entrance (head losses).
   - Poor distribution of screen openings causes excessive convergence of flow near the individual openings, and may produce twice as much drawdown as necessary.
   - Partial penetration of screens into aquifers distorts the flow around the well. Flow to the well will include both the horizontal and vertical components. If the vertical conductivity is greater than the horizontal one, considerable head losses result from the vertical flow.
   - A wrong choice of filter material or gravel pack, for example angular grains or plate-like material, has been made.

ii) Construction factors:
   - Inadequate development of the well: fine material or drilling mud reduces original permeability
   - Improper screening: placing of screens on non-water-bearing stratum

Well interference

Well interference occurs when the cones of depression (Section 5.4.1) of two or more wells overlap. The spacing between wells determines the amount of interference. In general, wells in a well field designed for huge water supplies, for example for irrigation or municipal purposes, should be spaced so as to minimize the effects of interference, which would otherwise result in drastic lowering of water levels. Well interference is sometimes encouraged to lower groundwater levels and thus create huge storage for groundwater recharge (Section 5.5) during rainy seasons that can be used during the dry periods. Well interference can also be used to control water table elevations.

Advantages and disadvantages of pumping tests

Advantages of carrying out pumping tests are:

- A pumping test provides in situ parameter values that are representative of the aquifer
- Information on a number of hydraulic parameters such as transmissivity, hydraulic conductivity, storativity, specific yield, leakance, hydraulic diffusivity, etc. can be obtained from a single test, unlike laboratory tests that are based on sample measurements which, in most cases, will not be representative of the aquifer material. It is not possible to obtain all the hydraulic parameters from laboratory measurements. The same can be said of tracer techniques

- It is possible to predict the effect of new withdrawals (pumping) on existing wells
- The drawdown in a well at future times and different discharges can be predicted
- The radius of influence of a single well or a multiple of wells can be determined before the well or wells are sunk
- It provides very crucial information needed to conduct an effective and efficient groundwater management programme

One scientific and one practical disadvantage of pumping tests can be mentioned:

- The scientific limitation relates to the non-uniqueness of pumping test interpretation. In the absence of clear geological information, leaky, unconfined and bounded aquifers can give similar time-drawdown responses. In such cases, the calculated hydraulic parameters will be misleading
- The practical limitation lies in the cost of conducting pumping tests. Pumping wells and observation wells or piezometers will have to be drilled so as to obtain some of the aquifer hydraulic properties. It is worth noting that for aquifers intended for supply of irrigation water, the cost of such tests are outweighed by the overall irrigation investment. Risks for irrigation projects collapsing midway due to lack of proper well design and the computation of optimum pumping rates (from pumping test analysis) exist if the hydraulic properties of the aquifer are not known

5.5. Groundwater recharge

Groundwater recharge, expressed in mm/year, can be defined as the entry of water into a groundwater body or aquifer after infiltration and percolation through the unsaturated zone. Principal sources of natural recharge include precipitation (which is mostly rainfall in East and Southern Africa), rivers and reservoirs. Other sources of recharge are irrigation return flows and seepage from canals. The amount of annual recharge is very important since it is what defines the sustainable yields of aquifers. If groundwater abstractions greatly exceed the amount of recharge, *groundwater mining* results.

There are a number of techniques used in the estimation of groundwater recharge. Some of them are described below.

5.5.1. Water balance equations

Simple water budget equations can be used in the estimation of recharge, and an example in the recharge area of a catchment is:

Equation 45

$$P = R_O + R_G + E_T$$

Where:

P	=	Average annual precipitation (rainfall in our case)
R_O	=	Average annual surface runoff
R_G	=	Average annual groundwater recharge
E_T	=	Average annual evapotranspiration

The amount of recharge can thus be estimated if all the other parameters are accurately measured or estimated. The average annual rainfall and runoff can be estimated with some degree of accuracy. The accurate determination of evapotranspiration is difficult, since on a catchment scale it can only be assessed by indirect measurements and through the use of formulae such as the Penman-Monteith method.

5.5.2. Chloride mass balance technique

This is an inexpensive and relatively simple technique of estimating groundwater recharge. Although the technique is not as accurate as other methods, differences in recharge estimation are still within the order of magnitude. The technique is based on the assumption of conservation of mass balance between the input of atmospheric chloride and the chloride flux in the subsurface (again assuming that there are no sources or sinks for chloride) and under steady state conditions. In that case, the following mass balance equation can be defined:

Equation 46

$$R_T \times Cl_{gw} = P \times Cl_p + D$$

Where:

R_T	=	Average total recharge
Cl_{gw}	=	Average chloride concentration in groundwater
P	=	Average rainfall
Cl_p	=	Average chloride concentration in rainfall
D	=	Average dry chloride deposition measured during the dry periods

As all parameters except R_T can be measured, the average total recharge R_T can then be computed from:

$$R_T = \frac{P \times CL_p + D}{CL_{gw}}$$

The method has been extensively employed in groundwater recharge and groundwater resources assessment of the Kalahari in Botswana. Usage of the technique in Zimbabwe is still in its early stages.

5.5.3. Groundwater level fluctuations method

Groundwater level fluctuations reflect the response of unconfined aquifer systems to recharge, pumping and natural losses such as evapotranspiration and baseflow (groundwater flow to rivers or streams). The rise in water level (Δh) at a particular location after a rainfall event can be converted to recharge by using the following formula:

Equation 47

$$R = \Delta h \times S_y$$

Where:

R = Groundwater recharge

Δh = Rise in water level

S_y = Specific yield (Section 5.4.2), which can be obtained from the analysis of pumping tests data

The accuracy of R strongly depends on the specific yield. The estimation of groundwater recharge using this technique has been carried out in the Nyamandhlovu Sandstone Aquifer in Zimbabwe, the Wondergat dolomite sink hole in South Africa and in the Kalahari in Botswana.

5.5.4. Environmental isotopes

Environmental isotopes commonly used in groundwater resources investigation are oxygen 18 and hydrogen 2 (known as deuterium), radiocarbon (carbon 14) and tritium. Oxygen 18 and hydrogen 2 are stable isotopes and are used, inter alia, to determine the origin or source of the groundwater, sources of groundwater salinity and mixing between various water bodies. Radiocarbon and tritium are used to determine the 'age' of groundwater, which will be indicative of whether the groundwater is being actively recharged or whether it was recharged some time ago.

5.6. Groundwater management

Groundwater management constitutes the development and sustainable utilization of groundwater resources without compromising its quantity and quality. Effective and efficient groundwater management requires the establishment of a monitoring programme, which looks at (i) groundwater level fluctuations, (ii) abstraction rates, and (iii) water quality aspects. Groundwater models are an essential management tool.

5.6.1. Groundwater models

Models are important as predictive tools to estimate how the groundwater quality or quantity may change given certain conditions such as variation in pumping rates, drawdowns or groundwater levels, recharge rates, etc. It is also possible to predict water levels given pumping rates or vice versa. The effects of boundary conditions, such as surface water (rivers and reservoirs) contribution to groundwater, can also be assessed. Two general types of numerical models exist, the finite difference and finite element models. Modflow is a commercially available finite difference computer model.

5.6.2. Lowering groundwater levels

Aquifers adjoining rivers or other surface water sources or with rivers running through them can potentially be recharged from the surface water. This can be established by the use of isotopes (Section 5.5.4). In such cases, a reduction in the groundwater levels induces recharge from the surface water source, if the surface water body is hydraulically linked to the aquifer. It is good management practice to draw down the groundwater table during dry periods. The reduction in the water table would be temporary and rapid recovery could be expected during normal rainy seasons.

5.6.3. Conjunctive use of surface water and groundwater

Conjunctive use involves the coordinated and planned utilization of both surface water and groundwater resources to meet water requirements in a manner where water is conserved. In a conjunctive scheme, during periods of above normal rainfall surface water is utilized to the maximum extent possible and, where feasible, artificially recharged (pumped into aquifers through wells known as injection wells) into the aquifer to augment groundwater storage and raise groundwater levels (care should be taken not the raise the levels to the crop root zone). Conversely, during drought periods the limited surface water resources will be supplemented by pumping groundwater, thereby lowering the water levels. However, the cost of setting up such a scheme could be prohibitive for most African countries.

5.6.4. Groundwater monitoring

Groundwater monitoring is a prerequisite for optimal groundwater resource management so as to achieve sustainable use in terms of both quantity and quality over the long term. A monitoring programme routinely provides a continuous record of the aquifer's response to various inputs and outputs including recharge, evapotranspiration, baseflow and abstraction, as manifested by changes in water levels and water quality with time. Knowledge of the response of the aquifer to these factors with time therefore enables groundwater resources management to be conducted efficiently and effectively.

The routine monitoring of groundwater abstractions, groundwater level fluctuations and water quality data is crucial. Any variations in these can, with time, provide early warning signs of the deterioration in groundwater quantity or quality and will allow for early remedial action to be taken. A very good electronic hydrogeological database, linked to a surface water one where feasible, is a must since this will make data manipulation and analysis a lot easier and much quicker. Time series plots of important parameters would be easy to generate. Moreover, the data are very important in refining groundwater models (Section 5.6.1) and thus assist in the accurate predictions of various scenarios for current groundwater development and future groundwater needs.

Figure 70 shows a hydrograph (groundwater level fluctuation with time) of a well in the Nyamandhlovu Sandstone Aquifer in southwestern Zimbabwe. The hydrograph shows a continuous groundwater level decline, about 0.25 m/year, with little or no indication of groundwater levels recovery. The decline is a result of high abstraction or discharge rate and sooner or later the groundwater level would be drawn down to the pump intake.

If there were saline groundwater below the fresh water, saline water upconing would be inevitable. Moreover, lowered drawdowns translate to increased pumping costs. It is thus apparent that it is not good groundwater management practice to cause severe drawdowns in semi-arid regions where recharge is limited. Pumping heavily from these aquifers provides only a short-term solution for a long-term problem. Too often, short-term economic considerations become the primary factor affecting groundwater management.

Figure 70

Hydrograph showing continuous groundwater level decline (the well is from Nyamandhlovu Aquifer in south western Zimbabwe)

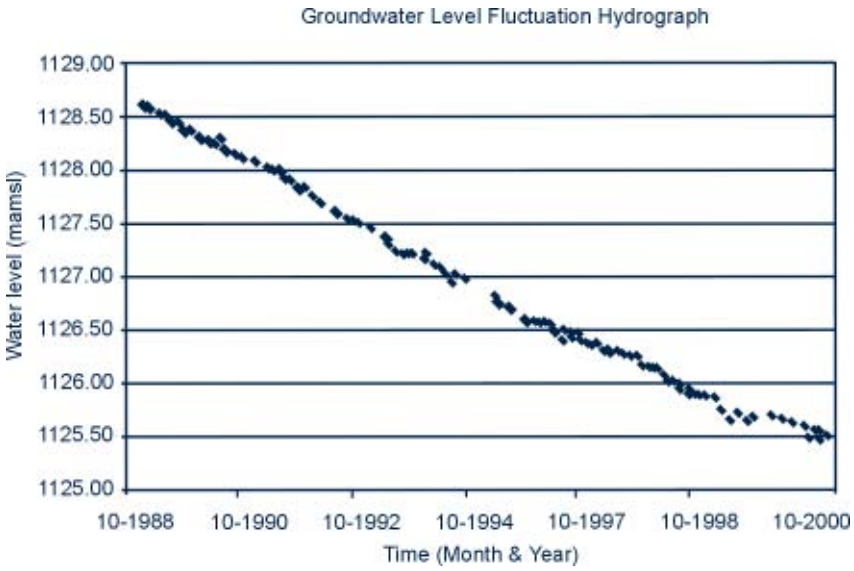

References

Abderraham, W. A. *et al*. 1995. Impacts of management practices on groundwater conditions in the Eastern Province, Saudi Arabia. *Hydrogeology Journal*, Volume 3 No. 4, 32-41 pp.

Barnister, A. and Raymond, S. 1986. *Surveying*. Fifth edition, English Language Book Society. Longman, London.

Beekman, H. E. *et al.* 1997. *Chloride and isotope tracer profiling studies in the Letlhakeng-Botlhapatlou area and the central Kalahari*. GRESS II Technical Report: Groundwater recharge and resource assessment in the Botswana Kalahari.

Bouwer, H. 1978. *Groundwater hydrology*.

Bouwer, H. and Rice, C.H. 1976. A slug test method for determining hydraulic conductivity of unconfined aquifers with completely or partically penetrating wells. *Water Resources Research*, Volume 12, No. 3.

Bredenkamp, B.D., Botha, L., J., van Tonder, G. L. and van Rensburg, H. J. 1995. *Manual on quantitative estimation of groundwater recharge and aquifer storativity.*

Byron, J. 1994. *Spectral encoding of soil texture: a new vizualization method.* Department of Geography, University of South Carolina, USA. GIS/LIS.

Chalingar, G.V. 1963. Relationship between porosity, permeability, and grain size distribution of sands and sandstones. *Proceedings of the International Conference on Sedimentology, Amsterdam, Antwerp*.

Chettri, M. and Smith, G.D. 1995. Nitrate pollution in groundwater in selected districts of Nepal. *Hydrogeology Journal*, Volume 3 No. 1, 71-76 pp.

Clarke, I., and Fritz, P. 1997. *Environmental isotopes in hydrogeology.*

Cooper, H.H., Bredehoeft and Papadopulos, I.S. 1967. Response of a finite-diameter well to an instantaneous recharge of water.

Davis, S.N. 1969. Porosity and permeability of natural materials. *Flow through porous media*, edited by R.J.M. De Wiest, Academic Press, New York, 54-89 pp.

Di Gregorio, A. and Jansen, L.J.M. 1998. *Land cover classification system (LCCS): Classification concepts and user manual*. For software version 1.0. GCP/RAF/287/ITA Africover – East Africa Project in cooperation with AGLS and SDRN. Nairobi, Rome.

Driscoll, F.G. 1986. *Groundwater and wells. Second edition.*

Eijkelkamp. Undated. *Training equipment for schools.*

Euroconsult. 1989. *Agricultural compendium for rural development in the tropics and subtropics*. Elsevier, Amsterdam, The Netherlands.

FAO. 1979. Soil survey investigations for irrigation. *FAO Soils Bulletin 42*. FAO, Rome, Italy.

FAO. 1985a. Guidelines: Land evaluation for irrigated agriculture. *FAO Soils Bulletin 55*. FAO, Rome, Italy.

FAO. 1985b. Elements of topographic surveying. Prepared by C. Brouwer, A. Goffeau, J. Plusjé and M. Heibloem. *Irrigation water management training manual No 2*. Rome, Italy.

FAO. 1985c. Water quality for agriculture. *FAO Irrigation and Drainage Paper Number 29*. Prepared by: Ayers, R.S. and Westcot, D. W. Rome.

FAO/UNEP. 1997. *Negotiating a sustainable future for land. Structural and institutional guidelines for land resources management in the 21st Century*. FAO/UNEP, Rome, Italy.

FAO/UNEP. 1999. *The future of our land: facing the challenge. Guidelines for integrated planning for sustainable management of land resources.* FAO/UNEP, Rome, Italy.

FitzPatrick, E.A. 1980. *Soils: their formation, classification and distribution*. Longman Publishers, New York.

Foster, S.S.D. and Smith-Carrington, A. 1980. The interpretation of tritium in the chalk unsaturated zone. *Journal of Hydrology.* Volume 46, 343-364 pp.

Freeze, R.A. and Cherry, J. A. 1979. *Groundwater*.

Geological Survey of Germany. 1996. *Limestone and dolomite resources of Africa*.

Government of Zimbabwe. 1998. *Zimbabwe Water Act 1998*.

International Atomic Energy Agency. 1981. Stable isotope hydrology, deuterium and oxygen-18 in the water cycle. *Technical Reports Series No. 210*. Edited by J.R. Gat and R. Gonfiantini.

International Hydrological Programme. 2000. Environmental isotopes in the hydrological cycle: *Principles and applications; Volume IV Number 39 Groundwater - saturated and unsaturated zone.* Edited by W.G. Mook.

International Hydrological Programme. 2001. Environmental isotopes in the hydrological cycle: Principles and applications; Volume V No.39 *Man's impact on groundwater systems*. Edited by W.G. Mook.

Jensen, M.E. 1983. *Design and operation of farm irrigation systems.* American Society of Agricultural Engineers (ASAE).

Kamp, G. van der. 2001. Methods of determining the in situ hydraulic conductivity of shallow aquitards - an overview. *Hydrogeology Journal,* Volume 9 No. 1, 5-16 pp.

Kern & Co. Ltd. Undated. *Instruction manual for Kern GK 0 Builder's level and Kern GK 1 Small Engineer's level*. Switzerland.

Kruseman, G.P. and de Ridder, N. A. 1990. *Analysis and evaluation of pumping test data*. Second edition (completely revised).

Leica, Ag. 1993. *Level accessories, Product catalogue*. Heerbrugg, Switzerland.

Leica Geosystems. Undated. *Surveying made easier*. By: K. Zeiske.

Mather, J.D. 1975. Development of groundwater resources of small limestone islands. *Quarterly Journal of Engineering Geology,* Volume 8, 141-150 pp.

MEWRD (Ministry of Energy, Water Resources and Development). 1984. *An assessment of the surface water resources of Zimbabwe and guidelines for development planning*. Zimbabwe.

MEWRD (Ministry of Energy, Water Resources and Development) 1988. *Sedimentation and yields of small dams*. Zimbabwe.

Ministère de la coopération française. 1980. Memento de l'agronome.

Papadopulos, I.S. and Cooper, H.H. 1973. Drawdown in a well of large diameter. *Water Resources Research,* Volume 3.

Terao, H., Yoshika Y. and Kato, K. 1993. Groundwater pollution by nitrate originating from fertiliser in Kakamigahara Heights, central Japan. *International Association of Hydrogeologists,* Volume 4.

Theim, G. 1906. *Hydrologische methoden*. Leipzig, 56 p.

Thompson, J.G. and Purves, W.D. 1979. The Assessment of the suitability of soils for irrigation. *Rhodesia Agricultural Journal Vol 76 (3)*.

Ting, C.S., Kerh, T., and Liao, C. J. 1998. Estimation of groundwater recharge using the chloride mass balance method, Pingtung Plain, Taiwan. *Hydrogeology Journal,* Volume 6 No. 2, 282-292 pp.

Todd, D.K. 1976. *Groundwater hydrology.*

Tucker, M.E. 1991. *An introduction to the origin of sedimentary rocks*.

Uren, J and Price, W. F. 1985. *Surveying for engineers*. Second edition.

Ward, R.C. and Robinson M. 1990. *Principles of hydrology*. Third edition.

Wild Heerbrugg Ltd. Undated. *Levelling, Users' manual*. Switzerland.

Wild Heerbrugg Ltd. Undated. *The theodolite and its applications, Users' manual*. Switzerland

Wilson, R.J.R. 1971. *Land Surveying.*

Winter, T.C. 1999. Relation of streams, lakes, and wetland to groundwater flow systems. *Hydrogeology Journal,* Volume 7, No.1, 28-45 pp.

Withers, B. and Vipond, S. 1974. *Irrigation: Design and practice*. Batsford, London.