Irrigation Manual

Planning, Development, Monitoring and Evaluation of Irrigated Agriculture with Farmer Participation

Module 10

Irrigation Equipment for Pressurized Systems

Developed by

Andreas P. SAVVA

and

Karen FRENKEN

Water Resources Development and Management Officers

FAO Sub-Regional Office for East and Southern Africa

Harare, 2002

Food and Agriculture Organization of the United Nations (FAO)

Sub-Regional Office for East and Southern Africa (SAFR)

Harare, 2002

The views expressed in this paper are those of the authors and do not necessarily reflect the views of the Food and Agriculture Organization of the United Nations

The designations employed and the presentation of the material in this publication do not imply the expression of any opinion whatsoever on the part of the Food and Agriculture Organization of the United Nations concerning the legal status of any country, territory, city or area of its authorities, or concerning the delimitation of its frontiers or boundaries

All rights reserved. No part of this publication may be reproduced, stored in a retrieval system, or transmitted in any form or by any means, electronic, mechanical, photocopying or otherwise, without the prior permission of the copyright owner

© FAO SAFR 2002

Design and Layout: Fontline International, Mauritius
Printed by: Préci-ex, Les Pailles, Mauritius

Contents

List of figures v
List of tables vii
Foreword ix
Acknowledgements xi
Unit conversion table xii
List of abbreviations xiii

1. INTRODUCTION 1

2. WATER LIFTING DEVICES 3

3. PRESSURE PIPE SYSTEMS 5
3.1. Sizing the economical pipe diameter 5
3.2. Fibre-cement pipes 5
3.3. Unplasticized polyvinyl chloride pipes 7
3.4. Polyethylene pipes 11
3.4.1. Principles for the selection of irrigation laterals 14
3.4.2. Drip tape 14
3.4.3. Polyethylene fittings 14
3.5. Hoses 17
3.6. Aluminium and lightweight steel pipes for quick coupling 18
3.7. Steel pipes 19

4. WATER DELIVERY DEVICES 23
4.1. Sprinklers and sprayers 23
4.1.1. Impact sprinklers 23
4.1.2. Rotor and gear rotating sprinklers 27
4.1.3. Stationary sprinklers or sprayers 28
4.2. Centre pivot and moving lateral irrigation machines 30
4.3. Emitters 30
4.3.1. Individual emitters 30
4.3.2. Emitting-pipes 33

5. PRESSURE AND WATER FLOW CONTROL DEVICES 37
5.1. Pressure control devices 37
5.1.1. Pressure regulating valves 37
5.1.2. Pressure relief valves 39
5.1.3. Pressure gauges 39
5.1.4. Air release valves 39
5.2. Water flow control devices 40
5.2.1. Cast iron gate valves 40
5.2.2. Brass gate valves 41
5.2.3. Plastic valves 43
5.2.4. Hydraulically-operated valves 44
5.2.5. Volumetric valves 45
5.2.6. Check valves 47
5.2.7. Line flushing valves 47
5.2.8. Water meters and flow meters 47

6. SPECIALITY ITEMS 51
6.1. Irrigation control head 51
6.1.1. Visual inspection 53
6.1.2. In-situ test of resistance and water tightness under hydraulic pressure 54
6.1.3. Test of operation 54
6.2. Filtration 54
6.2.1. Vortex sand separators 54
6.2.2. Screen mesh filters 55
6.2.3. Disc filters 56
6.2.4. Media filters 59
6.3. Chemical injection equipment 60
6.3.1. Venturi-type injectors 60
6.3.2. Water-driven chemical injector pumps 61

REFERENCES 67

List of figures

1. Driver output percentage of rated pump power required in the range of 1 to 100 kW 3
2. uPVC integral pipe end socket 8
3. Solvent-weld-type sockets 8
4. Common injection-moulded uPVC fittings 9
5. HDPE with plastic and metal clamps and fittings for portable systems 10
6. In-line connector 15
7. Barbed-type, compression-type and other fittings used for PE pipes and collapsible tapes (drip tapes) 15
8. Types of quick couplings 18
9. Components of an impact sprinkler and their functions 23
10. Various types of impact sprinklers 25
11. Components of rotor sprinklers 28
12. Various micro-sprinklers and sprayers 29
13. A Floppy sprinkler and its flow pattern 30
14. Floppy sprinkler profile 31
15. Various types of emitters 32
16. Common types of drip tapes 35
17. Direct-acting pressure regulating valve 37
18. Regulation curve 38
19. Pressure gauge and accessories 39
20. Air release valves 40
21. Cast iron gate valves with non-rising and rising stems 41
22. Typical brass gate valve 42
23. Plastic valves 43
24. Opening and closing positions of a hydraulically-operated valve 44
25. Non-serial volumetric valve with and without solenoid valve 45
26. Various types of check valves 46
27. Line-flushing valve 48
28. Cross-section of a water meter 48
29. Irrigation control head for filtration 51
30. Irrigation control head for automation and pressure regulation 51
31. Irrigation control head for filtration and pressure regulation 52
32. Irrigation control head for filtration with media filter 52
33. Irrigation control head for chemigation 52
34. Multipurpose irrigation control heads 53
35. Vortex sand separator 54
36. Head losses in vortex sand separators of sizes ¾-6 inches 55
37. Filtration process through a screen filter (strainer-type filter) 56
38. Semi-automatic screen filter 57
39. Filtration and back flushing of an automated disc filter 58

40. Media filter in filtration and back-flush mode 59
41. Connection of bladder-type tank to the system 61
42. Venturi-type chemical injectors 62
43. Water-driven chemical injector pumps 63
44. In-line water-driven injector pump 64
45. On-line water-driven injector pump 64

List of tables

1. Values of constant k for electric and diesel pumping duration 5
2. Nominal and outside diameters at finished ends of fibre-cement pressure pipes 6
3. Classification of fibre-cement pressure pipes 6
4. Classification of fibre-cement pressure pipes 7
5. Pressure relationship for fibre-cement pressure pipes 7
6. Pressure classes of uPVC pipes 8
7. Specifications of most common sizes of uPVC pipes used for irrigation purposes 8
8. Classes of LDPE Type I and Type II pipes 11
9. Pressure derating factors for LDPE pipes 11
10. Dimensions of LDPE Type I pipes 12
11. Dimensions of LDPE Type II pipes 12
12. Pressure derating factors for HDPE pipes 12
13. Dimensions of HDPE Type III pipes 13
14. Dimensions of HDPE Type IV pipes 13
15. Dimensions of polyethylene pipe for irrigation laterals 13
16. Effect of water temperature on PE pipe selection 14
17. Pressure rating and resistance to suction flattening 17
18. Nominal bore diameters, tolerances and minimum wall thickness for reinforced hose 17
19. Tolerances on outside diameter of aluminium pipes 18
20. Minimum denting factors for aluminium irrigation tubes 19
21. Dimensions of Perrot-type light steel pipe 19
22. Dimensions of light class steel pipes 20
23. Dimensions and pressure rating of light class steel pipes 20
24. Dimensions and pressure rating of medium class steel pipes 21
25. Dimensions and pressure rating of heavy class steel pipes 21
26. Impact sprinkler performance data: straight bore nozzle, stream height 1.8 m 24
27. Impact sprinkler performance data 26
28. Sprinkler nozzle height above collectors 26
29. Spacing of collectors 27
30. Performance of a rotor sprinkler 27
31. Performance of a micro-sprinkler 30
32. Uniformity values by category 33
33. Maximum heights for some sizes of cast iron gate valves 41
34. Pressure/temperature rating for threaded end gate valves 42
35. Minimum wall thickness for valves having threaded ends 42
36. Technical specifications of PVC ball valves 43
37. Closing torque 44
38. Flow rates and dimensions of volumetric valves 47
39. Indicator range 49

Foreword

The first edition of the Irrigation Manual was published in 1990 in two volumes by the "Smallholder Irrigation" Project (UNDP/FAO/AGRITEX/ZIM/85/004). The authors of this first edition were FAO Staff on the project[1]. This edition of one hundred copies ran out within two years from publishing.

Although the manual was written with Zimbabwe in mind, it soon became popular in several countries of the sub-region. In view of the high demand, it was decided to proceed with a second edition. The experience gained from using the first edition of the manual as the basic reference for the AGRITEX[2] training programme of irrigation practitioners and the University of Zimbabwe, was incorporated in the second edition which was published in 1994, in one volume by the "Technical Assistance to AGRITEX" project (UNDP/FAO/AGRITEX/ZIM/91/005). This second edition was published under the same authors as the first edition, with the assistance of a review committee from AGRITEX[3]. The two hundred copies of this edition also ran out within two years of publishing.

In 1995, the FAO Sub-regional Office for East and Southern Africa (SAFR) was established in Harare, Zimbabwe, in order to provide easy access to technical assistance and know-how for the countries of the sub-region[4]. In view of the high demand for support in the field of smallholder irrigation by the countries of the sub-region, this office was strengthened with four water resources management officers and a number of on-going programmes have been developed to provide this support. One of these programmes is the publishing of a new regional edition of the irrigation manual in support of the on-going national training programmes within several countries in the sub-region and to provide the basic reference for another important programme, which is the sub-regional training on planning and design of smallholder irrigation schemes.

This third edition aspires to further strengthen the engineering, agronomic and economic aspects of the manual and to introduce new modules related to social, health and environmental aspects of irrigation development. The emphasis is directed towards the engineering, agronomic and economic aspects of smallholder irrigation, in view of the limited practical references in this area. This manual, being directed to the irrigation practitioner, does not provide an in-depth analysis of the social, health and environmental aspects in irrigation development. It only attempts to introduce the irrigation practitioner to these areas, providing a bridge between the various disciplines involved in irrigation development.

The initiatives and efforts of the Water Resources Management Team of SAFR in publishing this Manual are considered as a valuable contribution to the dissemination of knowledge and training of irrigation practitioners in the sub-region. The material covered by this manual is expected to support both national and sub-regional training programmes in the planning, design, construction, operation and maintenance and on-farm water management of irrigation schemes. This will support the implementation of FAO's mandate to increase food production through water control, intensification and diversification, which are the basic components of the Special Programme for Food Security (SPFS).

The manual is the result of several years of field work and training irrigation engineers in the sub-region. The approaches have been field tested and withstood the test of time.

---

[1] *A.P. Savva, Chief Technical Advisor; J. Stoutjesdijk, Irrigation Engineer; P.M.A. Regnier, Irrigation Engineer; S.V. Hindkjaer, Economist.*

[2] *Agritex: Department of Agricultural Technical and Extension Services, Ministry of Lands and Agriculture, Zimbabwe.*

[3] *Review committee: E. Chidenga, Acting Chief Irrigation Officer; P. Chipadza, Senior Irrigation Specialist; A. Dube, Senior Irrigation Specialist; L. Forichi, Irrigation Specialist; L. Madhiri, Acting Principal Irrigation Officer; S. Madyiwa, Irrigation Specialist; P. Malusalila, Chief Crop Production; R. Mariga, Assistant Secretary, Economic and Markets Branch; D. Tawonezvi, Agricultural Economist.*

[4] *The following 21 countries are part of the FAO-SAFR region: Angola, Botswana, Burundi, Comoros, Eritrea, Ethiopia, Kenya, Lesotho, Madagascar, Malawi, Mauritius, Mozambique, Namibia, Rwanda, Seychelles, South Africa, Swaziland, Tanzania, Uganda, Zambia, Zimbabwe.*

For ease of reference to the various topics covered by this Manual, the material has been divided into 14 modules, covering the following:

Module 1:	Irrigation development: a multifaceted process
Module 2:	Natural resources assessment
Module 3:	Agronomic aspects of irrigated crop production
Module 4:	Crop water requirements and irrigation scheduling
Module 5:	Irrigation pumping plant
Module 6:	Guidelines for the preparation of technical drawings
Module 7:	Surface irrigation systems: planning, design, operation and maintenance
Module 8:	Sprinkler irrigation systems: planning, design, operation and maintenance
Module 9:	Localized irrigation systems: planning, design, operation and maintenance
Module 10:	Irrigation equipment for pressurized systems
Module 11:	Financial and economic appraisal of irrigation projects
Module 12:	Guidelines for the preparation of tender documents
Module 13:	Construction of irrigation schemes
Module 14:	Monitoring the technical and financial performance of an irrigation scheme

To those who have been waiting for so long for a practical irrigation engineering manual: here it is. I am sure that it will have a lot to offer to both the new and experienced irrigation engineers.

Victoria Sekitoleko
FAO Sub-Regional Representative
for East and Southern Africa

Acknowledgements

The preparation of the third edition of the Irrigation Manual is an initiative of FAO's Sub-Regional Office for East and Southern Africa (SAFR).

The whole project was managed and coordinated by Andreas P. Savva and Karen Frenken, Water Resources Development and Management Officers at FAO-SAFR, who are the main authors. Karen Frenken also is the main technical editor.

The following persons provided valuable inputs into this Volume V: Tove Lilja (Module 11 and 14), Simon Madyiwa (Module 12 and 14), Susan Minae (Module 11 and 14), Victor Mthamo (Module 13), Kennedy Mudima (Module 13), Personal Sithole (Module 11 and 14) and Lee Tirivamwe (Module 12, 13 and 14).

The preparation of several drawings by Solomon Maina is acknowledged.

Special appreciation is extended to Chris Pappas for his substantial contribution to the layout of the Irrigation Manual.

Unit conversion table

Length

1 inch (in)	0.0254 m
1 foot (ft)	0.3048 m
1 yard (yd)	0.9144 m
1 mile	1609.344 m
1 metre (m)	39.37 inches (in)
1 metre (m)	3.28 feet (ft)
1 metre (m)	1.094 yards (yd)
1 kilometre (km)	0.62 miles

Area

1 square inch (in^2)	6.4516×10^{-2} m^2
1 square foot (ft^2)	0.0929 m^2
1 square yard (yd^2)	0.8361 m^2
1 acre	4046.86 m^2
1 acre	0.4046 ha
1 square centimetre (cm^2)	0.155 square inches (in^2)
1 square metre (m^2)	10.76 square feet (ft^2)
1 square metre (m^2)	1.196 square yard (yd^2)
1 square metre (m^2)	0.00024 acres
1 hectare (ha)	2.47 acres

Volume

1 cubic inch (in^3)	1.6387×10^{-5} m^3
1 cubic foot (ft^3)	0.0283 m^3
1 cubic yard (yd^3)	0.7646 m^3
1 cubic centimetre (cm^3)	0.061 cubic inches (in^3)
1 cubic metre (m^3)	35.315 cubic feet (ft^3)
1 cubic metre (m^3)	1.308 cubic yards (yd^3)

Capacity

1 imperial gallon	0.0045 m^3
1 US gallon	0.0037 m^3
1 imperial barrel	0.1639 m^3
1 US. barrel	0.1190 m^3
1 pint	0.5681 l
1 US gallon (dry)	0.0044 m^3
1 litre (l)	0.22 imp. gallon
1 litre (l)	0.264 U.S. gallon
1 litre (l)	0.0061 imperial barrel
1 hectolitre (hl)	100 litres = 0.61 imperial barrel = 0.84 US barrel
1 litre (l)	1.760 pints
1 cubic metre of water (m^3)	1000 l = 227 U.S. gallon (dry)
1 imperial barrel	164 litres

Mass

1 ounce	28.3286 g
1 pound	0.4535 kg
1 long ton	1016.05 kg
1 short ton	907.185 kg
1 gram (g)	0.0353 ounces (oz)
1 kilogram (kg)	1000 g = 2.20462 pounds
1 ton	1000 kg = 0.984 long ton = 1.102 short ton

Pressure

1 pound force/in^2	6894.76 N/m^2
1 pound force/in^2	51.7 mm Hg
1 Pascal (PA)	1 N/m^2 = 0.000145 pound force /in^2
1 atmosphere	760 mm Hg = 14.7 pound force/in^2 (lbf/in^2)
1 atmosphere	1 bar
1 bar	10 metres
1 bar	100 kpa

Energy

1 B.t.u.	1055.966 J
1 foot pound-force	1.3559 J
1 B.t.u.	0.25188 Kcalorie
1 B.t.u.	0.0002930 KWh
1 Joule (J)	0.000947 B.t.u.
1 Joule (J)	0.7375 foot pound-force (ft.lbf)
1 kilocalorie (Kcal)	4185.5 J = 3.97 B.t.u.
1 kilowatte-hour (kWh)	3600000 J = 3412 B.t.u.

Power

1 Joule/sec	0.7376 foot pound/sec
1 foot pound/sec	1.3557 watt
1 cheval-vapor	0.9861 hp
1 Kcal/h	0.001162 kW
1 watt (W)	1 Joule/sec = 0.7376 foot pound/sec (ft lbf/s)
1 horsepower (hp)	745.7 watt 550 ft lbf/s
1 horsepower (hp)	1.014 cheval-vapor (ch)
1 kilowatt (kW)	860 Kcal/h = 1.34 horsepower

Temperature

^{0}C (Celsius or centigrade-degree)	$^0C = 5/9 \times (^0F - 32)$
^{0}F (Fahrenheit degree)	$^0F = 1.8 \times {}^0C + {}^0F$
K (Kelvin)	$K = {}^0C + 273.15$

List of abbreviations

ABS	Acrylonitrile-Butadiene-Styrene
ASA	Acrylonitrile-Styrene-Acrylester
AC	Asbestos Cement
ANSI	American National Standards Institute
ASAE	American Society of Agricultural Engineers
BS	British Standard
CID	Constant Inside Diameter
COD	Constant Outside Diameter
d	diameter
DN	Nominal Diameter
E	Efficiency
HDPE	High Density Polyethylene
IS	International Standard
ISO	International Organization for Standardization
kPa	Kilopascal
kW	Kilowatt
LDPE	Low Density Polyethylene
MAP	Maximum Admissable Pressure
MAT	Maximum Admissable Temperature
MPa	Megapascal
MRS	Minimum Required Strength
N	Newton
NPSHA	Net Positive Suction Head Available
NPSHR	Net Positive Suction Head Required
PB	Bursting Pressure
PE	Polyethylene
PN	Nominal Pressure
PT	Test Pressure
PVC-C	Chlorinated Polyvinyl Chloride
PVC-U	Unplasticized Polyvinyl Chloride
SABS	South African Bureau of Standards
SAZ	Standards Association of Zimbabwe
SAZS	Standards Association of Zimbabwe Standards
uPVC	unplasticized Polyvinyl Chloride

Chapter 1
Introduction

As a rule, pressurized irrigation systems are composed of water lifting devices, piped networks, water delivery devices, and pressure and water control devices. At times, because of the topography, no water lifting devices are required and water gravitates into the system. Irrespective of whether pumps are used or not, the water in the irrigation system is always under pressure. The magnitude of pressure depends on the requirements of a particular technology. Generally, localized irrigation systems operate at lower pressure than sprinkler irrigation systems. It is therefore necessary that during the preparation of the designs and bills of quantity (Module 8 and 9) the pressure requirements of the system are clearly stated and the equipment to meet these requirements is identified.

Another element to consider is that within the same piped network pressure is consumed by head losses as the water flows from one point to another and from lower to higher elevations. Consequently, the equipment used at the beginning of the network should be able to withstand higher pressures than the equipment used at the end of the network. The reverse is also true when water is flowing from higher elevation to lower elevation and when the friction losses are not high enough to compensate for the difference in elevation.

In today's markets there is a great variety of irrigation equipment on offer. This makes the task of the design and construction engineers very intricate. Equipment is manufactured according to international standards, national standards or no standards at all. The conformity to a particular standard provides the assurance of quality performance control, to the extent provided by the particular standard.

Standards are norms of performance of particular equipment. They are developed by national or international bodies with the mandate to develop standards. These bodies can accredit professional societies to develop particular standards or can form specific committees and forums where interested parties for a particular standard participate in its drafting. The International Organization for Standardization (ISO) is a worldwide federation of national standards bodies, called ISO member bodies. The work of preparing International Standards (IS) is normally carried out through ISO technical committees. Any member body interested in the development of a particular standard can sit on the relevant technical committee. International organizations and other interested parties also take part in the work. Draft IS are adopted by the technical committees and circulated to the member bodies for voting to publish them or not. The publication of an IS requires approval by at least 75% of the member bodies casting a vote. Standards are periodically reviewed because of technological changes and in view of experience gained from their use.

The preparation of standards is a tedious and time-consuming process, being the result of requests from the users for a particular product. Therefore, before a standard is developed, a product must be available on the market. Consequently, there is a substantial time lag between the moment that a product becomes available on the market for the first time and the formulation, approval and publication of a standard for this product. Steel, asbestos cement, aluminium, uPVC and polyethylene pipes, being products widely used for several decades, are all covered by several standards. In contrast to this, standards for screen filters, the use of which is limited to localized irrigation systems, were first published by ISO only in 1992, even though some of this equipment had been available since the early 1970s. Another example is the ANSI/ASAE S539 DEC01 standard for testing and performance reporting of media filters for irrigation, which was first adopted by ASAE in 1994, about 10 years after the introduction of this product in the market.

Standards are voluntary. Hence, a manufacturer may choose to follow a particular standard or not. Products made to conform to a particular standard bear the seal of the relevant standards association and as such afford the opportunity to the user to ensure that this equipment is of the desired performance quality. The user, in view of the uncertainty of their performance, may not accept products not manufactured according to a particular recognized standard. It is therefore necessary that the irrigation engineers specify conformity to relevant standards for the various components of an irrigation system.

The most commonly used standards for irrigation equipment in East and Southern Africa are the standards of each country, where available. As a rule, most national

standards for irrigation equipment are very similar to and are based on the International Standards or the British Standards or both. It is therefore suggested that in the absence of national standards one or more of the following standards can be used:

- International Organization for Standardization (ISO)
- South African Bureau of Standards (SABS)
- British Standard (BS)
- American National Standards Institute (ANSI)
- American Society of Agricultural Engineers (ASAE)

This module aims at aquainting the reader with the various components of pressurized irrigation systems and their performance characteristics as prescribed by the relevant standards when available. For details on the provisions of the different standards the reader is referred to the relevant standards documents. In the absence of standards, reference will be made to manufacturers' catalogues. The reader is also referred to Modules 8, 9 and 12, which cover designs and bills of quantity of pressurized irrigation systems and tendering.

Chapter 2
Water lifting devices

Module 5, 'Irrigation Pumping Plant', deals with the description of manual (positive displacement) and motorized centrifugal pumps. Therefore, this chapter will be limited to the provision of reference standards covering technical specifications for centrifugal pumps.

ISO has developed three separate standards dealing with the technical specifications of centrifugal pumps:

- ISO 9905:1994
  Technical specifications for centrifugal pumps – class I
- ISO 5199:2002
  Technical specifications for centrifugal pumps – class II
- ISO 9908:1993
  Technical specifications for centrifugal pumps – class III

Class I comprises the most severe and class III the least severe requirements. As explained in each of these standards, "it is not possible to standardize the class of technical requirements for centrifugal pumps for a certain field of application, because each field of application comprises different requirements. All three classes can be used in accordance to the different requirements of the pump application. So it may happen that pumps built in accordance with Classes I, II and III may work beside one another in one plant." Therefore, the class chosen is to be agreed upon between purchaser and manufacturer/supplier.

The same standards propose that the following criteria for the selection of the required class be used:

- Reliability
- Required operating life
- Operating conditions
- Environmental conditions
- Local ambient conditions

The tolerances on materials and performance of class III pumps are not as strict as those of class II and class I pumps. As a rule, centrifugal pumps manufactured for general irrigation purposes fall under class III pumps. However, there may be environmental and local ambient conditions where class II and even class I pumps may be required for irrigation as specified by the purchaser.

The ISO standards dealing with centrifugal pumps specify that the characteristic curve for the impeller to be supplied with the pumps shall show the head, efficiency, Net Positive

Figure 1
Driver output percentage of rated pump power required in the range of 1-100 kW (Source: ISO 9908:1993)

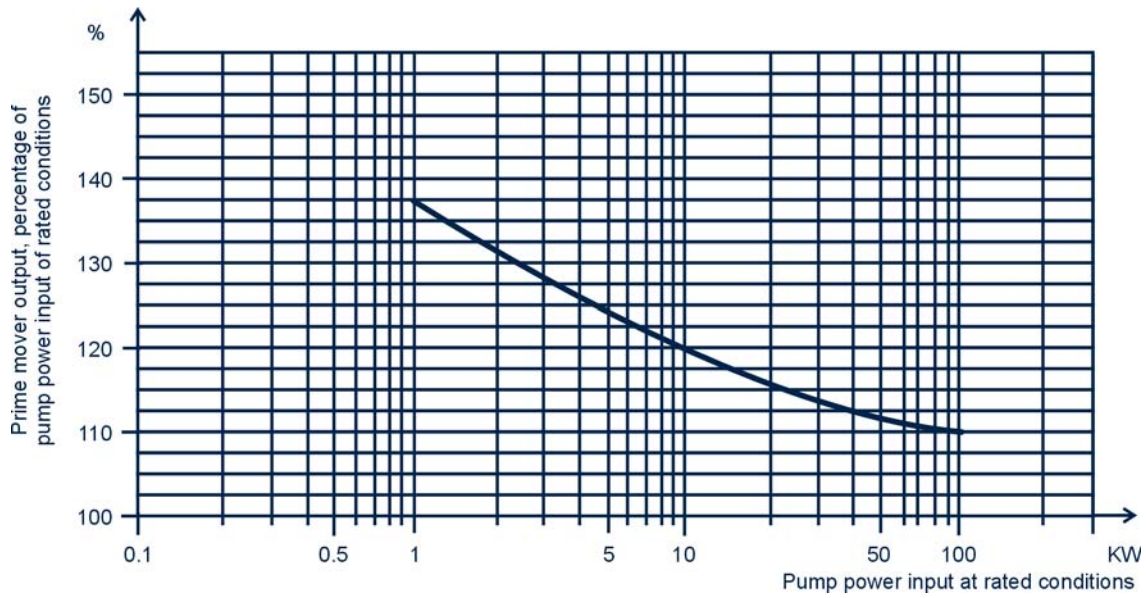

Suction Head Required (NPSHR) and the power input, plotted against flow rate.

ISO 9908:1993 requires that the characteristic curve shall indicate the operating range of the pump. It also refers to standards ISO 2548 and ISO 3555 on the testing procedures for NPSHR purposes. It further specifies that the Net Positive Suction Head Available (NPSHA) should exceed the NPSHR by at least 0.5 m.

The same standards specify that the pumps should preferably be suitable for outdoors installation under normal environmental conditions. It also specifies that the prime mover shall have a power output rating at least equal to the percentage of rated pump power input, as shown in Figure 1.

ISO 9908:1993 provides limits for vibration, pressure-temperature rating for different materials used for the manufacture of the pump, and it provides running clearances and standards for bearings and shaft seals. It also provides specifications for couplings and the assembly of the pump and drive on the base plate and specifies the relevant tests for hydraulic performance.

Chapter 3
Pressure pipe systems

The most common pipes used for pressurized irrigation systems are:

- Fibre-cement pipes, commonly known as asbestos cement pipes (AC)
- Unplasticized polyvinyl chloride pipes (uPVC)
- Polyethylene pipes (PE)
- Hoses
- Aluminium pipes
- Steel pipes

3.1. Sizing the economic pipe diameter

Very often the design engineer is confronted with the question of which type of pipes should be used for what diameters. Most certainly this will depend on the comparative cost of the different pipes of the same diameter, their life expectancy and the installation cost. The diameter of the pipe will depend on the flow rate and the friction losses of the different types of pipes for the chosen velocity. This would then affect the annual energy cost. In other words, the engineer is confronted with the sizing of the most economic pipe diameter.

Smit (1993) proposed the following empirical equation based on the flow rate and a constant (k), which depends on the annual pumping hours. She recognizes, however, that this formula applies only to 80% of cases and suggests that it should be used as a first approximation.

Equation 1

$$d = kq^{0.37}$$

Where:

d	=	Pipe diameter (mm)
q	=	Flow rare (m^3/hr)
k	=	Constant depending on annual pumping hours (Table 1)

The same author proposes the following combination of pipe sizes and types of pipes, for the South African conditions:

- For sizes up to 50 mm — Polyethylene pipes
- For sizes of 50 to 110 mm — uPVC pipes
- For sizes of 110 to 350 mm — Fibre-cement pipes
- For sizes larger than 350 mm — Steel pipes

However, these norms vary from country to country because of the combined effect of pipe prices, and transport and installation costs. Also, since the raw material for the manufacture of both polyethylene and uPVC are petrol derivatives and since a very high percentage of their manufacture cost is the cost of the raw material, the cost of the international price of petrol can affect their prices substantially. These norms can also change from time to time. For example, in Zimbabwe when the prevailing prices of petrol were low, the prices of the 160 mm uPVC pipe was very similar to the 150 mm fibre-cement pipe. When the prices of petrol increased, the 140 mm uPVC pipe was more expensive than the 150 mm fibre-cement pipe.

3.2. Fibre-cement pipes

Fibre-cement pipes are manufactured from Portland cement reinforced by fibres, the formulation of which contains chrysotile asbestos. This pipe is very smooth internally and thus the friction coefficient is very low. It can easily be damaged if poorly handled. At times, cracks occurring during transport and installation only become noticeable later on during testing. It is recommended that this pipe be buried to avoid mechanical damage. As a rule, these pipes come in lengths of 4 m. In some countries lengths of 5 m and 6 m are also available.

A number of standards are available for this type of pipe, including ISO 160:1980, ISO 390, ISO 7337, SAZS 113:2000 and others. These standards govern the manufacture, testing and analysis of test data.

Table 1

Values of constant k for electric and diesel pumping duration (Source: Smit, 1993)

k	25	27	29	31	34
Electric pumping (hrs/year)	1 500	2 000	4 000	8 000	
Diesel pumping (hrs/year)		500	1 000	2 000	4 000
Estimated friction (%)	2	1.5	1	0.75	0.5

SAZS 113:2000 specifies only outside diameter and allows the manufacturer to specify the inside diameter and the thickness. However, the thickness should be such that the pipe can pass the bursting pressure test.

A common definition used among standards is the nominal diameter (DN). According to SAZS 113:2000, this is a numerical designation of a component, being a convenient round number approximately equal to the manufacturing

Table 2

Nominal and outside diameters at finished ends of fibre-cement pressure pipes (Source: SAZS 113:2000)

Nominal diameter (mm)	Class	Outside diameter at finished ends (mm)	Tolerance on outside diameter (±)
50	All	69.1	0.6
75	All	95.6	0.6
100	All	121.9	0.6
125	All	149.9	0.6
150	All	177.3	0.6
175	All	204.7	0.6
200	All	232.2	0.6
225	All	259.1	0.6
250	All	286.0	0.6
300	All	345.4	0.8
350	All	392.0	0.8
400	All	448.0	0.8
450	All	507.0	1.0
525	All	587.2	1.0
600	All	667.0	1.0
675	All	741.7	1.5
750	06	797.0	1.5
750	12	814.0	1.5
750	18	840.0	1.5
750	24	877.0	1.5
750	30	905.0	1.5
825	06	877.0	1.5
825	12	895.0	1.5
825	18	924.0	1.5
825	24	956.0	1.5
825	30	995.0	1.5
900	06	956.0	1.5
900	12	995.0	1.5
900	18	1 008.0	1.5
900	24	1 048.0	1.5
1 000	6	1 062.0	1.5

Table 3

Classification of fibre-cement pressure pipes (Source: SAZS 113:2000)

Class	Hydraulic factory test pressure	
	Head of water (m)	Test pressure in Megapascal (MPa)
6	61	0.6
9	92	0.9
12	122	1.2
15	153	1.5
18	184	1.8
21	214	2.1
24	245	2.4
27	275	2.7
30	306	3.0
33	336	3.3
36	367	3.6
42	428	4.2

Table 4
Classification of fibre-cement pressure pipes (Source: ISO 160:1980)

Class	Works hydraulics test pressure (TP)*	
	(bar)	MPa
5	5	0.5
6	6	0.6
10	10	1.0
12	12	1.2
15	15	1.5
18	18	1.8
20	20	2.0
24	24	2.4
25	25	2.5
30	30	3.0
35	35	3.5
36	36	3.6

* *TP is equal to the factory test pressure*

dimension in mm of the inside diameter. The same standard provides the actual outside diameter at finished ends of the pipe and its tolarance, as shown in Table 2.

According to SAZS 113:2000, the pipes are classified in different classes based on the hydraulic factory test pressure (PT). This is the value of the hydraulic pressure to which the pipe is tested in the factory using the test specified by the same standard. Table 3 presents this classification.

ISO 160:1980 also requires that the nominal diameter corresponds to the inside diameter expressed in mm, and classifies these pipes as per Table 4.

The following pressure-related definitions and tests were introduced by the SAZS 113:2000 standards:

- **Bursting pressure (PB)**: The value of the hydraulic pressure at which a component fails when tested in the factory according to a test prescribed by the standards
- **Nominal pressure (PN)**: A numerical designation of pressure (field working pressure) used for reference purposes related to the mechanical characteristics of a component
- **Test pressure (PT)**: The value of the hydraulic pressure to which the pipe is tested in the factory using the test specified by the same standard

According to SAZS 113:2000, the relationship between bursting pressure (PB) and the nominal pressure (PN), and the relationship between the test pressure (PT) and the nominal pressure (PN) shall be no less than the values indicated in Table 5. This implies that for most sizes the working pressure in the field is half of the pressure tested in the factory [(PT/PN) = 2] and that the bursting pressure is 2.5-4 times the working pressure. For the PB test the hydraulic pressure is applied so that rupture occurs after at least 30 seconds. The same duration is also envisaged for the factory test pressure. However, the working field pressure is continuously applied during the operation of the system.

Table 5
Pressure relationship for fibre-cement pressure pipe (Source: SAZS 113:2000)

Nominal Diameter (DN) (mm)	PB/PN	PT/PN
50-100	4.0	2.0
125-200	3.5	2.0
250-500	3.0	2.0
600-1000	2.5	1.67

3.3. Unplasticized polyvinyl chloride pipes

uPVC pipes and fittings are made of PVC-U polymer, to which some additives are incorporated in order to facilitate manufacture. ISO 1628 provides for the testing of this polymer. Depending on the standard, the use of the manufacturer's clean rework material only may be permissible as long as the pipe meets the material standards.

uPVC pipes are relatively light, easy to handle and durable. They come in lengths of 6 m. Few chemicals can affect them. They are corrosion and alkaline proof. However, poor handling can cause mechanical damages such as dents and deep scratches. The friction coefficient is low because of the smooth bore. Even though the pipes are treated against ultraviolet rays, they should be buried.

A number of standards on the manufacture of uPVC pipes and fittings are available. ISO 1192, SABS 966:1976, SAZS

Table 6

Pressure Classes of uPVC pipe (Source: SAZS 327:2001)

Pressure class	Maximum working pressure at 25ºC (kPa)	Head of water (m)
4	400	40
6	600	60
9	900	90
12	1 200	120
16	1 600	160
20	2 000	200
25	2 500	250

Table 7

Specifications of most common sizes of uPVC pipe used for irrigation purposes (Source: SAZS 327:2001)

Nominal diameter (mm)	Outside diameter (mm)		Wall thickness (mm)							
			Pressure class							
			4		6		9		12	
	minimum	maximum	min	max	min	max	min	max	min	max
50	50.0	50.2			1.8	2.1	2.2	2.6	2.8	3.2
63	63.0	63.2			1.9	2.2	2.7	3.1	3.6	4.1
75	75.0	75.2	1.5	1.8	2.2	2.6	3.2	3.7	4.3	4.9
90	90.0	90.3	1.8	2.2	2.7	3.1	3.9	4.4	5.1	5.8
110	110.0	110.3	2.2	2.6	2.6	3.0	3.9	4.4	5.1	5.8
125	125.0	125.3	2.5	2.9	3.0	3.5	4.4	5.0	5.8	6.5
140	140.0	140.4	2.8	3.3	3.3	3.8	4.9	5.5	6.5	7.3
160	160.0	160.4	3.2	3.7	3.8	4.3	5.6	6.3	7.4	8.3
180	180.0	180.5	3.6	4.2	4.3	4.9	6.3	7.1	8.3	9.3
200	200.0	200.5	3.9	4.6	4.7	5.3	7.0	7.9	9.2	10.3
225	225.0	225.5	4.4	5.1	5.3	6.0	7.9	8.8	10.3	11.5
250	250.0	250.6	4.9	5.6	5.9	6.6	8.7	9.7	11.5	12.8

327:2001 are some of the most common standards used for this pipe in East and Southern Africa. These standards provide the definitions, the classification, the tests and their interpretation. Table 6, from SAZS 327:2001, provides the classes of uPVC pipes based on the maximum working pressure. The same classes of pipe are also specified under SABS 966:1976.

SAZS 327:2001 specifies the nominal size, the outside diameter, and the maximum and minimum wall thickness of different classes of uPVC pipes with integral pipe-end socket (Table 7). Figure 2 shows the integral pipe end.

Figure 2

uPVC integral pipe-end socket

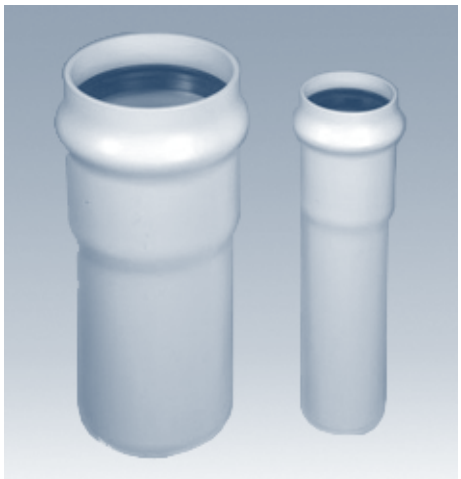

Figure 3

Solvent-weld-type socket

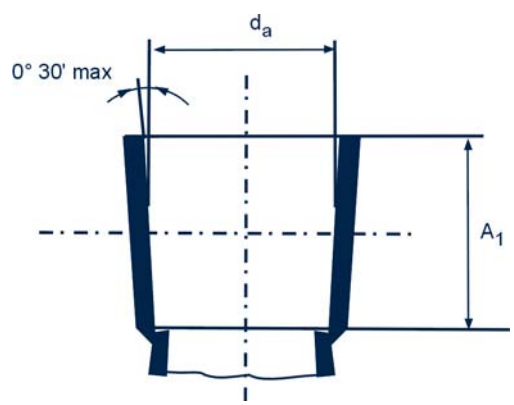

Figure 4
Common injection-moulded uPVC fittings

Tee

Elbow

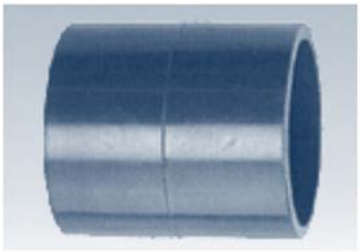
Coupler/ socket

End cap (plane)

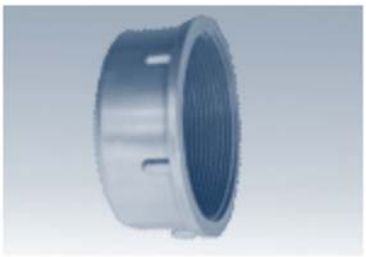
End cap (threaded)

Male threaded adapter

Female threaded adapter

Reducer socket

Female threaded coupler

Multi stage reducer socket

Reducer bush

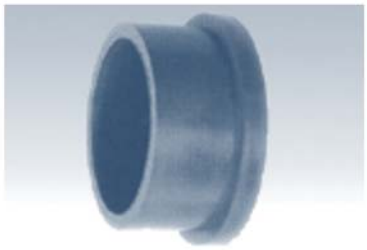
Flange adapter

Union adapter

One side threaded union adapter

Service saddle

Figure 5
HDPE with plastic and metal clamps and fittings for portable systems

Couplings

Couplings

Tee

Bend

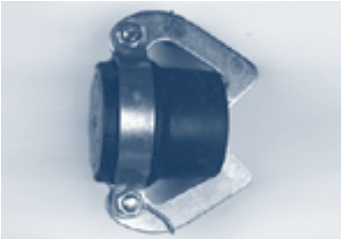

End cap

Service saddle

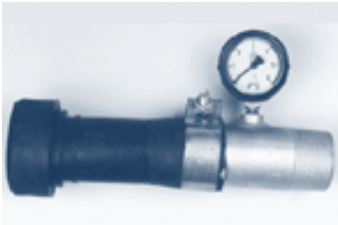

Pump connector

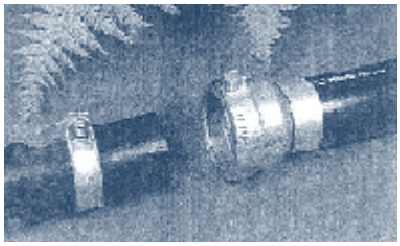

Couplings

The same standards specify the workmanship and how to make the integral pipe-end socket. It states in detail that "both the inner and the outer surface of the pipes shall be smooth and free from grooving, blisters and other deleterious defects. A plain end of the pipe shall be clean cut and in the case of an integral pipe-end socket, shall be chamfered (at an angle of approximately 15°) to half the wall thickness of the pipe."

There are two types of integral pipe-end sockets. The one shown in Figure 2 uses a rubber ring to be inserted in the socket during installation. The other socket is bell-shaped and is connected to the other pipe through the use of solvent cement (Figure 3).

While uPVC pipes are extruded, their fittings are produced through injection moulding. Figure 4 shows some of the most common injection-moulded uPVC fittings. The pressure class of the 50-63 mm diameter is specified by SAZS 327:2001 to be 16. For sizes of 75-200 mm the pressure class shall be 12. According to ISO 7834 the maximum pressure rating at 27°C is 16 kg/cm^2 for pipes of 20-32 mm, 10 kg/cm^2 for pipes of 40-63 mm size and 6 kg/cm^2 for pipes 75-110 mm.

3.4. Polyethylene pipes

The extrusion compound used for the PE pipe is manufactured from a mixture of polyethylene, which may include copolymers of ethylene and higher olefins, in which the higher olefin content does not exceed 10%, by mass fraction. It also includes anti-oxidants and carbon black, uniformly dispersed. Depending on the standard, the use of the manufacturer's own clean rework material only may be permissible as long as the pipe meets the material standards. There are several ISO standards defining the material, the manufacture and testing of this pipe. ISO 12162:1995, ISO 8779:2001 and ISO 8796:1989 are those more relevant to irrigation pipes. The SAZS 531:1996 is derived from the relevant ISO standards and covers polyethylene pipes for irrigation laterals only.

Two types of polyethylene pipes are available on the market: the low density (LDPE) and the high density (HDPE) black polyethylene pressure pipe. The LDPE pipe is used for localized irrigation laterals. It is specified by SABS 533 Part I:1982 and can be used both for above ground and underground installation. SABS 533 Part II:1982 specifies the HDPE pipe, which is used for water distribution purposes both above ground and underground. In some countries, HDPE is used as secondary and manifold lines for localized irrigation systems. It would then be combined with LDPE for the laterals of the same systems. In other cases, buried uPVC pipes are used as secondary and manifold lines and are combined with LDPE for the laterals of the same systems. HDPE is also used for solid set sprinkler systems. In India, the same pipe is used for portable sprinkler systems and is combined with high impact plastic or metal clamps (Figure 5).

SABS 533 Part I:1982 specifies two types of LDPE: Type I, in which the nominal size of the pipe is related to the inside diameter, and Type II, where the nominal size is related to the outside diameter. Type I pipes come in two classes, while Type II pipes come in five classes. Table 8 shows the classes and pressure rating of the two types of LDPE.

Since this classification is based on the maximum working pressure being established at 20ºC, when the pipe is used at temperatures above 20ºC the maximum working pressure must be derated using the factors provided in Table 9.

Table 8

Classes of Type I and Type II LDPE pipes (Source: SABS 533:Part I:1982)

Type I pipes		Type II pipes	
Class	Maximum working pressure at 20ºC (kPa)	Class	Maximum working pressure at 20ºC (kPa)
3	300	4	400
6	600	6	600
		9	900
		12	1 200
		16	1 600

Table 9

Pressure derating factors for LDPE pipes, according to SABS 533 Part I:1982

Water temperature (ºC)	Factors applied to maximum working pressure at 20ºC
0-20	1.00
> 20-25	0.75
>25-30	0.56
>30-35	0.44
> 35-40	0.36

Example 1

Assuming that a localized irrigation system is being designed to operate under extreme conditions where the temperature of the water in the lateral reaches 37ºC and the expected pressure at the inlet of the laterals would be 200 kPa, which class of pipe should be used?

If a class 3 pipe of Type I is used, the maximum working pressure after derating would be 108 kPa (300 x 0.36). Since the pressure at the inlet of the pipe is more than 108 kPa (200 kPa) a higher class pipe would be required.

If a class 6 pipe of Type I is used then the maximum derating would be 216 kPa (600 x 0.36), which is just above the inlet pressure of 200 kPa. Hence the adoption of class 6 Type I pipe.

The same standard provides the dimensions of Type I and Type II LDPE pipes for the most common sizes and classes, as shown in Table 10 and 11.

While the density of the pipe material for LDPE pipes is set by the SABS standard to be in the range of 0.930 to 0.939 g/cm^3, the density of the HDPE pipes is set to 0.949 g/cm^3. According to SABS 533 Part II:1982 two types of HDPE are specified: Type III, in which the nominal size is related to the inside diameter, and Type IV, where the nominal size is related to the outside diameter.

The pipe classes and the maximum working pressure for Type III are the same as those of Type I. The classes of Type IV are 4, 5, 6, 9, 12, 16 and 20, corresponding to maximum working pressure at 20ºC of 400 to 2 000 kPa.

Table 10

Dimensions of Type I LDPE pipes (Source: SABS 533 Part I:1982)

Nominal size (mm)	Inside diameter (mm)		Wall thickness (mm)			
			Class 3		Class 6	
	Minimum	Maximum	Minimum	Maximum	Minimum	Maximum
10	10.0	10.3	1.6	2.0	1.6	2.0
12	12.0	12.3	1.6	2.0	1.6	2.0
15	15.7	16.0	1.6	2.0	1.6	2.0
20	20.5	20.9	1.6	2.0	2.1	2.6
25	26.5	27.0	1.6	2.0	2.8	3.3
32	34.0	34.6	1.7	2.1	3.5	4.1
40	40.0	40.8	2.0	2.4	4.2	4.9
50	51.2	52.1	2.6	3.1	5.3	6.1
65	61.8	62.9	3.1	4.3	6.5	7.4
80	77.2	78.3	3.8	4.5	8.1	9.2

Table 11

Dimensions of Type II LDPE pipes (Source: SABS 533 Part I:1982)

Nominal size (mm)	Outside diameter (mm)		Wall thickness (mm)					
			Class 4		Class 6		Class 9	
	Min	Max	Min	Max	Min	Max	Min	Max
16	16.0	16.3	1.6	2.0	1.6	2.0	2.0	2.4
20	20.0	20.3	1.6	2.0	1.7	2.1	2.5	3.0
25	25.0	25.3	1.6	2.0	2.2	2.7	3.1	3.7
32	32.0	32.3	1.9	2.3	2.8	3.3	4.0	4.6
40	40.0	40.4	2.4	2.9	3.5	4.1	5.0	5.7
50	50.0	50.5	3.0	3.5	4.3	5.0	6.2	7.1
63	63.0	63.6	3.7	4.3	5.4	6.2	7.8	8.8
75	75.0	75.7	4.5	5.2	6.5	7.4	9.3	10.5
90	90.0	90.9	5.3	6.1	7.8	8.8	11.1	12.5

Table 12

Pressure derating factors for HDPE pipes (Source: SABS 533 Part II:1982)

Water temperature (ºC)	Factor applied to maximum working pressure at 20º C
0-20	1.0
> 20-25	0.8
> 25-30	0.63
> 30-35	0.5
> 35-40	0.4
> 40-45	0.32
> 45-60	0.25

Since the working pressure is also based on 20ºC, a slightly different derating than the one used for LDPE is incorporated in Part II of the standards for HDPE (Table 12).

The dimensions of Type III and Type IV HDPE pipes for the most common sizes are presented in Tables 13 and 14.

A comparison between Type I and Type III pipes shows that while the same inside diameter is specified both for LDPE Type I and HDPE Type III pipes, the wall thickness of Type I pipes is higher than that of Type III pipes for the larger sizes (> 15 mm).

Table 13

Dimensions of Type III HDPE pipes (Source: SABS 533 Part II:1982)

Nominal size (mm)	Inside diameter (mm)		Wall thickness (mm)			
			Class 3		Class 6	
	Minimum	Maximum	Minimum	Maximum	Minimum	Maximum
10	10.0	10.3	1.6	2.0	1.6	2.0
12	12.0	12.3	1.6	2.0	1.6	2.0
15	15.7	16.0	1.6	2.0	1.6	2.0
20	20.5	20.9	1.6	2.0	1.6	2.0
25	26.5	27.0	1.6	2.0	1.8	2.2
32	34.0	34.6	1.6	2.0	2.2	2.7
40	40.0	40.8	1.6	2.0	2.6	3.1
50	51.2	52.1	1.7	2.1	3.4	4.0
65	61.8	62.9	2.0	2.4	4.0	4.6
80	77.2	78.3	2.5	3.0	5.0	5.7

Table 14

Dimensions of Type IV HDPE pipes (Source: SABS 533 Part II:1982)

Nominal size (mm)	Outside diameter (mm)		Wall thickness (mm)					
			Class 4		Class 5		Class 6	
	Min	Max	Min	Max	Min	Max	Min	Max
16	16.0	16.3	–	–	–	–	–	–
20	20.0	20.3	–	–	–	–	–	–
25	25.0	25.3	–	–	–	–	–	–
32	32.0	32.3	–	–	–	–	2.0	2.4
40	40.0	40.4	–	–	–	–	2.4	2.9
50	50.0	50.5	2.0	2.4	–	–	3.0	3.5
63	63.0	63.6	2.5	3.0	–	–	3.8	4.4
75	75.0	75.7	2.9	3.4	–	–	4.5	5.2
90	90.0	90.9	3.5	4.1	–	–	5.4	6.2
110	110.0	111.0	4.3	5.0	5.3	6.1	6.6	7.5

Table 15

Dimensions of polyethylene pipe for irrigation laterals (Source: ISO 8779:2001)

Nominal outside diameter (mm)	Pipe grades [a]					
	PE 32			PE 40		
	Pipe series [b]					
	S10	S6.3	S4	S12.5	S8	S5
	Nominal wall thickness (mm)					
12	1.0	1.1	1.4	-	1	1.1
16	1.2	1.4	1.8	1	1.2	1.5
20	1.3	1.5	2.3	1.2	1.5	1.9
25	1.4	1.9	2.8	1.2	1.5	2.3
32	1.6	2.4	3.6	1.5	1.9	2.9
Nominal pressure (MPa)	2.5	4	6	2.5	4	6

a The system of designation of the various grades of PE is based on the minimum required strength (MRS) in Megapascals (MPa) multiplied by 10.

b The pipe series (S) is defined as the ratio s/PN, where s is the recommended induced stress at 20º C and PN is the nominal pressure rating in MPa of the pipe at 20º C.

Again, the wall thickness for the LDPE Type II pipe is higher than for the HDPE Type IV pipe for the corresponding sizes and class.

ISO 8779:2001, covering the specification for polyethylene pipes for irrigation laterals, provides the dimensions and nominal pressure for this pipe (Table 15). SAZS 531:1996 provides slightly different pipe series.

A comparison between the diameters of PE pipes from different standards shows that there are differences in the inside and outside diameter for the same nominal size. It is therefore necessary that the fittings to be used correspond to the standard specified for the pipe.

ISO 8779:2001 also requires that the pipe be tested for hydrostatic strength. The low temperature test is run for 100 hours at 20ºC. The high temperature test is run for 165 hours at 80ºC.

3.4.1. Principles for the selection of irrigation laterals

ISO 8779:2001 provides principles for the selection of irrigation laterals. In summary these are:

a. *General working conditions*: The pipes are expected to work for 1 500 hours per year at pressures up to the nominal pressure of the pipe and at water temperatures of up to 45ºC. When these conditions are exceeded, the next greater wall thickness should be chosen. When the pipe is not in use, the pressure should be released. Under these conditions the life expectancy of the pipe should be 10 years or less.

b. *Type of connection between the pipe and its fittings and the pipe and the various distributors (emitters)*: The type of connection does not affect the choice of the pipe when insert type fittings and distribution devices are used. However, when the distribution device is inserted into a non-threaded hole in the wall of the pipe, the wall thickness should be no less than 1.2 mm. When the distribution device is threaded into the pipe wall, the wall thickness should be no less than 1.5 mm. When the connecting fitting is a compression fitting the wall thickness of the pipe should be no less than 1.2 mm, unless the pipe is reinforced in the gripping zone with a suitable insert.

c. *Type of irrigation system to which the lateral is linked*: In semi-mobile sprinkler systems, the lateral shall be no less than a PN 6 pipe. For trailer-type drip systems, the lateral shall be no less than a PN 4 pipe.

d. *Effect of water temperature on the choice of the nominal pressure (PN) of the pipe*: Up to 35ºC, the PN of the pipe is based on the maximum working pressure required of the pipe. At temperatures of 36-45ºC, the pipe should be selected from the lower pipe series in order to obtain a pipe with greater wall thickness, as shown in Table 16, referring to PE 40 pipe.

Table 16

Effect of water temperature on PE pipe selection (Source: ISO 8779:2001)

Pipe selected and pressure conditions	Temperature range	
	Up to 35 ºC	36 to 45 ºC
Pipe series selected	S8	S5
Nominal pressure PN (bar)	4	6
Maximum working pressure (bar)	4	4

In other words, if the maximum working pressure required of a lateral is 2.5 bar, a pipe of PN = 2.5 bar (S12.5) could be used when the water temperature is up to 35ºC. However, at temperatures of 36-45ºC a PN 4 (S8) pipe should be used.

3.4.2. Drip tape

One of the most interesting developments with localized irrigation is the introduction of what is commonly known as drip tape. The ANSI/ASAE S553 MAR01 standard provides the specifications and performance testing of the collapsible emitting hose. The collapsible emitting hose is defined by this standard as a continuous hose or tubing discharging water at discrete points along its length through flow regulating passageways formed into or attached onto the hose and having a sufficiently thin wall to permit collapsing when not under pressure. The specification and testing performance of this pipe or tape will be discussed under water delivery devices. It is interesting to note that ANSI/ASAE standards at the end of their designation provide the month and the year. For example, MAR01 implies that the standard was released in March 2001.

3.4.3. Polyethylene fittings

With the introduction of localized irrigation systems a simple and more economical type of fitting has become very popular with the connection of irrigation laterals. This fitting grips the pipe only from the inside by means of several circumferential saw-teeth (Figure 6). This type of fitting is commonly known as barbed. The multi-axial stresses continuously exerted by the teeth on the pipe can cause the stress cracking of the pipe. Longitudinal pipe cracks initiated at the tips of the teeth may start soon after installation or later on, causing the connection to fail. ISO 8796:1999 specifies the test method for susceptibility to environmental stress-cracking of the polyethylene pipe. In

summary, samples of the pipe are bent at both ends and secured in this position before they are immersed in a bath of Antarox CO-630 at 70ºC for 60 minutes. The samples are then inspected for cracks. The pipe is considered to have passed if less than 10% of the bends tested fail.

There are two types of fittings commonly used with polyethylene pipe: the barbed-type used for drip laterals, where the fitting is inserted in the pipe, and the compression-type fitting where the pipe is inserted into the fitting. Figure 7 shows the various types of fittings.

Figure 6
In-line connector (Source: ISO 8796:1989)

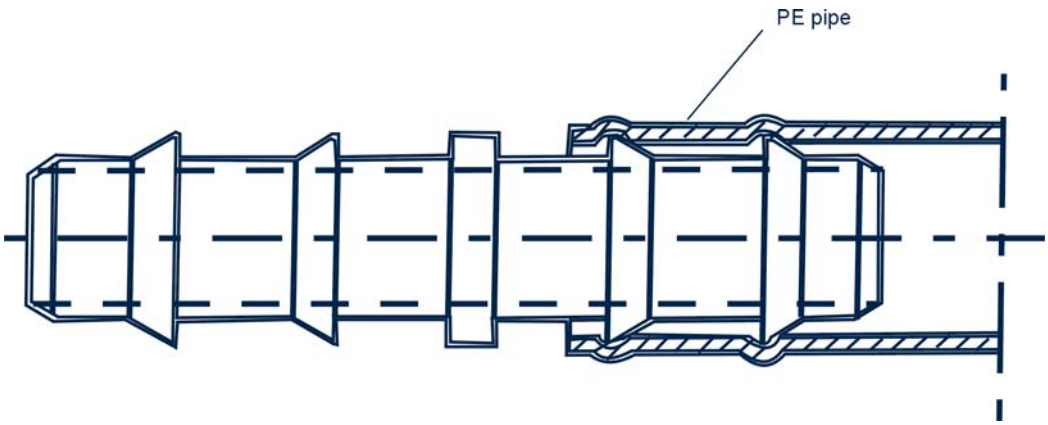

Figure 7
Barbed-type, compression-type and other fittings used for PE pipes and collapsible tapes (drip tapes)

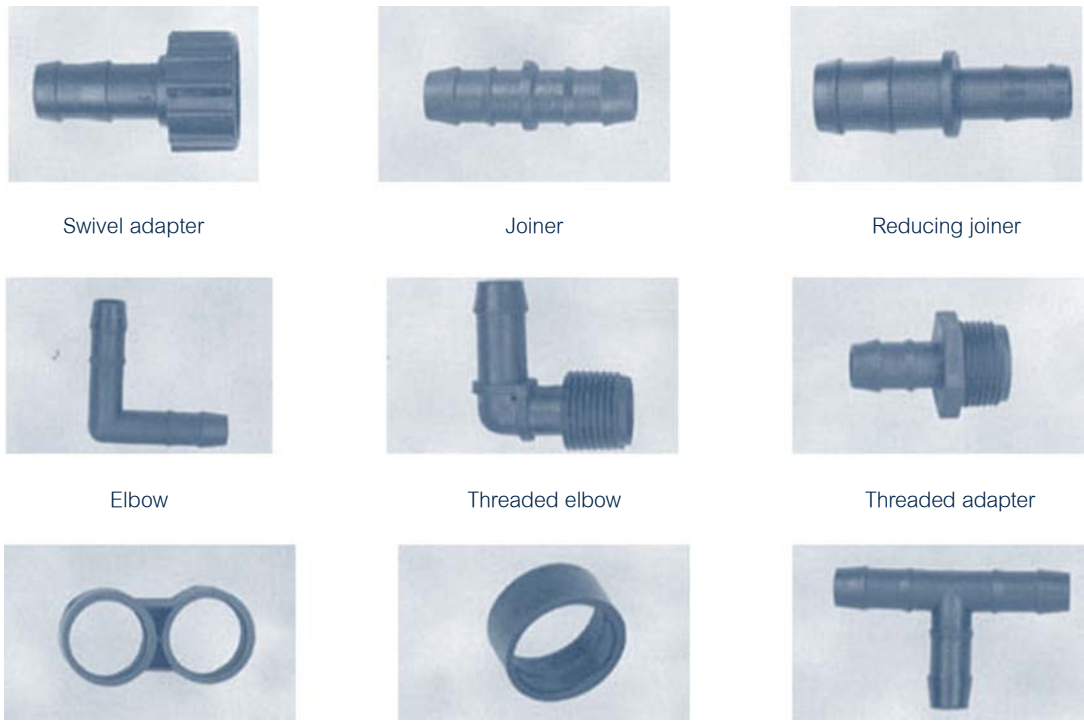

Figure 7 continued

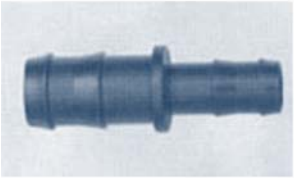

Reducing tee

Barbed threaded tee

Take off plug

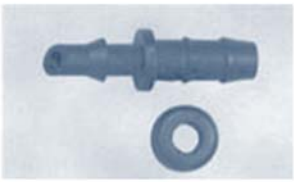

Grommet take off

End plug

Grommet

Goof plug

Threaded tee

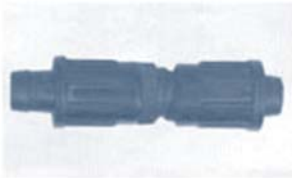

Drip tape cap joiner

Drip tape poly hose connector

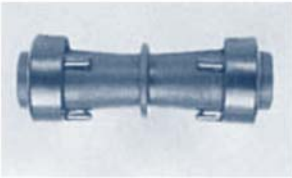

Drip tape ring joiner

Drip tape ring elbow

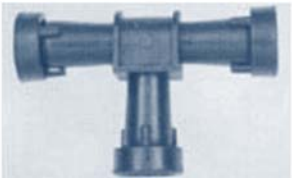

Drip tape ring tee

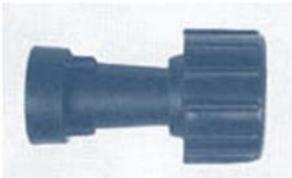

Drip tape ring swivel adapter

Compression fitting tee

Saddle outlet

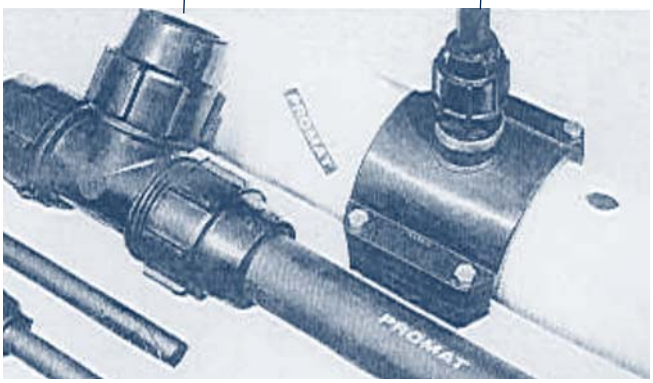

The ISO 9625:1993 standard covers mechanical joint fittings for use with polyethylene pressure pipes for irrigation. This standard does not apply to fittings used for drip irrigation, but refers to insert-type fittings (internal grip), compression-type fittings (external grip) and internal-external grip fittings. These fittings can be metal or plastic and should be tested when joined with the pipe.

This standard also specifies the tests for plastic and steel fittings with respect to dimensions, leak-proofness, resistance to pullout, resistance to long term internal hydrostatic pressure and pressure loss.

3.5. Hoses

Various types of hose are used for irrigation purposes. Some are used as suction hoses for pumps, others are used with drag-hose sprinkler systems and others again are used for the connection of travelling irrigators, side roll systems and travelling booms.

ISO 4641:1991 provides the specification for a rubber hose for water suction and discharge. This is a hose of natural or synthetic rubber reinforced with a suitable textile. It comes in two types and the pressure requirements and resistance to suction flattening are stated in Table17.

ISO 6224:1995 provides specification for plastic hoses that are textile reinforced for general purpose water applications. This is the hose used for drag-hose sprinkler systems. According to this standard three types are specified:

- Type 1: Light service, with a maximum working pressure of 0.6 MPa at 23ºC
- Type 2: General service, with a maximum working pressure of 1.0 MPa at 23ºC
- Type 3: Heavy service, with a maximum working pressure of 2.5 MPa at 23ºC

The ratio of minimum burst pressure to design working pressure is 3 for Type 1 and 2 and 4 for Type 3. Table 18, from the same standard, provides the dimensions of the three types of textile reinforced hose.

According to Smit (1993), SABS 1456 specifies a hose suitable for travelling irrigators, travelling booms and side roll systems. It comes with inside diameters of 50, 63.5, 75, 102 and 154 mm, all rated at 2 500 kPa maximum working pressure.

ISO 8224-2:1991 specifies test methods for soft wall hoses used with travel irrigation machines. This hose is defined as "a flexible reinforced tube for conveying water, roughly round in cross-section when filled with water under normal operating pressure, and which may be collapsible when drained of water. The hose consists of a cover, a hydraulic load bearing textile reinforcement and an inner impermeable tube." This standard specifies a number of tests including adhesion of cover to fabric, adhesion of tube to fabric, elongation, kinking, burst pressure, accelerated wear and others.

Table 17

Pressure rating and resistance to suction flattening (Source: ISO 4641:1991)

Type	Maximum working pressure (MPa)	Minimum burst pressure (MPa)	Resistance to suction flattening (kPa)
1	0.3	1.0	-63
2	0.5	1.6	-80

Table 18

Nominal bore diameters, tolerances and minimum wall thickness for reinforced hose, according to ISO 6224:1995)

Nominal bore diameter (mm)	Tolerance (mm) (mm)	Minimum wall thickness (mm)		
		Type 1	Type 2	Type 3
10	± 0.75	2.00	2.00	2.80
12.5	± 0.75	2.00	2.50	3.00
16	± 0.75	2.00	2.80	3.50
19	± 0.75	2.20	3.00	4.00
25	± 1.25	2.70	3.50	–
31.5	± 1.25	3.40	4.00	–
38	± 1.50	4.00	4.50	–
50	± 1.50	5.00	5.50	–

3.6. Aluminium and lightweight steel pipes for quick coupling

Aluminium and lightweight steel pipes for quick coupling were introduced to facilitate the requirements of semi-portable and portable sprinkler systems. There are three types of quick couplings used with these pipes: the Latch-type, the Perrot-type and the Bauer-type (Figure 8).

The latch-type coupling is either welded or fitted by pressing it inside on the one end of the pipe and the hook fitted with a ring on the other side of the pipe. When lightweight steel pipes are combined with this coupling the hook is welded on the other side of the pipe. Under pressure this coupling is leak-proof. When the system is turned off, the rubber seal of the coupling allows the pipe to drain. This allows easy unhooking and movement of the pipe with minimum damage to the crop. The seals of the other two types do not allow for the draining of the pipe after the system is turned off. It is therefore necessary that the pipe is unhooked at the end or somewhere along its length before movement can proceed.

Aluminium pipes for irrigation purposes come in lengths of 3, 6 and 9 m. They are covered under a number of standards including ISO 11678:1996, BS 755, ASAE S263.2, SAZS 362:1994 and others. While some of these standards cover the chemical composition of the alloys used for the manufacture of the different types of pipe, their dimensions and their testing, others are limited to the properties related to their use and the dimensions of the pipe (ASAE S263.2). Some standards (SAZS 362:1994) are only concerned with pipes used for irrigation systems where the operating pressure does not exceed 1 000 kPa.

ISO 11678:1996 classifies the aluminium pipes as tubes of a nominal pressure of up to 400 kPa, up to 1 000 kPa and up to 1 600 kPa. It also classifies the same pipes into extruded tubes and welded tubes, according to the method of manufacturing. A third classification is based on minimum denting factor, resulting in Type A and Type B pipes.

The same standard allows the manufacturer to declare the wall thickness of the pipe. However, it sets tolerance limits for all types, both for the wall thickness and the outside

Figure 8
Types of quick couplings (Source: Smit, 1993)

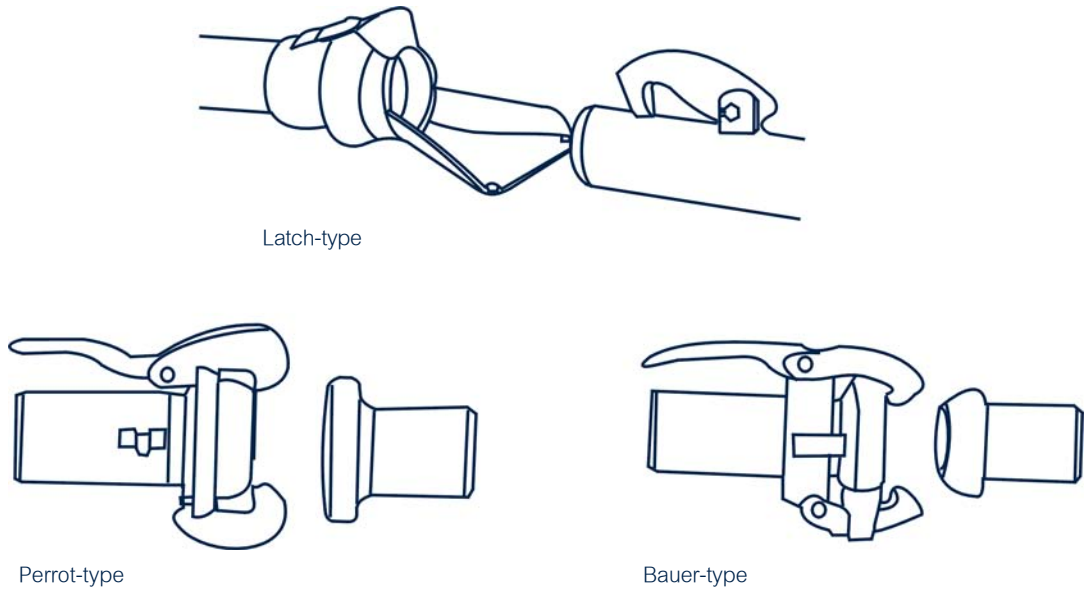

Table 19
Tolerances on outside diameter of aluminium pipes (Source: SAZS 362:1994)

Nominal outside diameter (mm)	Actual outside diameter (mm)	Tolerance		Maximum ovality*
		+ mm	- mm	
50	50.8	0.30	0.30	
75	76.2	0.15	0.60	1%
100	101.6	0.15	1.00	
125	127.0	0.25	1.15	2%
150	152.0	0.30	1.00	

* *Ovality is the difference between the maximum and the minimum diameters.*

diameter. For the most commonly used aluminium pipe for irrigation (1 000 kPa operating pressure), SAZS 362:1994 provides the tolerances on the outside diameter, as per Table 19.

A very important parameter for aluminium pipes is the denting factor. This refers to the ability of the aluminium tube to withstand external mechanical loading without permanent local deformation. To avoid excessive denting in handling the pipe or in field use, ISO 11678:1996 recommends that the denting factor should equal or exceed the figures provided in Table 20. In this respect it should be pointed out that the denting factor depends on the strength of the alloy, the wall thickness and the nominal diameter of the pipe.

The same standard specifies that the manufacturer supplies the following information:

- Name and address of manufacturer or supplier
- Nominal pressure in kPa
- Classification of tube according to method of manufacture (extruded or welded)
- Classification of the tube according to type (Type A or B)
- Tube dimensions: nominal diameter, wall thickness, length
- Designation of tube by chemical composition
- Other technical information

Lightweight steel galvanized pipes are also used for sprinkler systems in countries in East and Southern Africa. The light steel pipe of the Perrot-type quick coupling, manufactured in South Africa, has the dimension and pressure ratings shown in Table 21.

3.7. Steel pipes

At times, steel pipes and fittings are used for crossing gullies and in general for areas of difficult topography or rocky areas. Steel pipes and fittings are also used in combination with the other types of pipes, for example as hydrant risers or sprinkler risers.

Steel pipes come in lengths of 6 m. Based on the wall thickness, there are three classes (light, medium and heavy) of welded and seamless steel pipes. They also come as screwed pipes or plain-ended pipes. According to SAZS 102 Part I:1993, light class pipes shall be welded. Medium and heavy class pipe shall be welded or seamless. The same standard specifies that each screwed pipe shall be fitted with a tightly screwed socket on the one side and with a tight-fitting plastic cap on the other side. Pipes can come uncoated or with one of the following coating systems:

Light and medium pipes:

- Galvanized inside and outside in accordance to the requirements of BS 729
- Coated outside (and inside, if so required) with black paint, bitumen or varnish

Heavy pipes:

- Galvanized inside and outside in accordance with the requirements of BS 729

Table 20

Minimum denting factors for aluminium irrigation tubes (Source: ISO 11678:1996)

Nominal diameter (mm)	Minimum denting factor (N/mm)	
	Type A tubes	Type B tubes
Up to 40	1.6	6
50		4.5
75		3
100		2.2
125		2
150		

Table 21

Dimensions of Perrot-type light steel pipe (Source: Smit, 1993)

Outside diameter (mm)	Inside diameter (mm)	Working Pressure (kPa)	Mass for 6 m length (kg)
50	49.2	1 500	7.8
70	69.2	1 500	11.7
89	88.2	1 500	14.8
108	107.0	1 000	23.6
159	157.7	1 000	45.1

– Coated with red paint on the outside only

Table 22 gives the dimensions of the light pipes according to this standard.

According to Smit (1993), SABS 62 also specifies three classes (light, medium and heavy) of steel pipes. Tables 23, 24 and 25 provide the dimensions and pressure rating of these pipes.

A comparison between the dimensions stated under SAZS with those stated under SABS for light class steel pipes shows that the dimensions used are identical.

Table 22
Dimensions of light class steel pipes (Source: SAZS 102 Part I:1993)

Nominal bore (mm)	Outside diameter (mm)		Minimum wall thickness (mm)	ISO designation (inch)
	Maximum	Minimum		
6	10.1	9.7	1.6	1/8
8	13.6	13.2	1.6	1/4
10	17.1	16.7	1.6	3/8
15	21.4	21.0	1.8	1.2
20	26.9	26.4	2.1	3.4
25	33.8	33.2	2.4	1
32	42.5	41.9	2.4	11/4
40	48.4	47.8	2.6	11/2
50	60.2	59.6	2.6	2
65	76.0	75.2	3.0	21/2
80	88.7	87.9	3.0	3
100	113.9	113.0	3.3	4

Table 23
Dimensions and pressure rating of light class steel pipes (Source: Smit, 1993)

Pipe size (mm)	Inside diameter (mm)	Working pressure (kPa)
6	6.7	1 050
8	10.2	
10	13.7	
15	17.6	
20	22.6	
25	28.7	
32	37.4	850
40	42.9	
50	54.7	700
65	69.6	
80	82.3	
100	106.9	550

Table 24

Dimensions and pressure rating of medium class steel pipes (Source: Smit, 1993)

Pipe size (mm)	Inside diameter (mm)	Working pressure (kPa)
6	6.7	2 100
8	9.6	
10	13.1	
15	16.8	
20	22.3	
25	28.2	
32	36.9	1 700
40	42.8	
50	53.9	1 400
65	69.6	
80	81.8	
100	106.3	1 050
125	131.3	
150	156.7	850

Table 25

Dimensions and pressure rating of heavy class steel pipes (Source: Smit, 1993)

Pipe size (mm)	Inside diameter (mm)	Working pressure (kPa)
6	5.5	2 400
8	8.6	
10	12.1	
15	15.8	
20	21.3	
25	26.8	
32	35.5	2 100
40	41.4	
50	52.5	1 700
65	68.2	
80	80.4	
100	104.7	1 400
125	130.3	
150	155.7	1 050

Chapter 4
Water delivery devices

Water delivery devices include sprinklers of various types, micro-sprayers, bubblers and emitters. This module will concentrate on sprinklers, micro-sprayers and emitters.

4.1. Sprinklers and sprayers

Sprinklers can be classified as rotating and non-rotating. Within the rotating category there are the impact, the gear-driven and the rotor-type sprinklers. The most common agricultural sprinklers are impact sprinklers. However, new plastic rotor-type and stationary micro-sprinklers have gradually been entering the market, including the floppy sprinkler developed in South Africa.

4.1.1. Impact sprinklers

Impact sprinklers are made of brass, stainless steel, aluminium and heavy duty plastic. Figure 9 shows the different components of this sprinkler and their functions. It comprises the body, which in most cases incorporates the

Figure 9
Components of an impact sprinkler and their functions

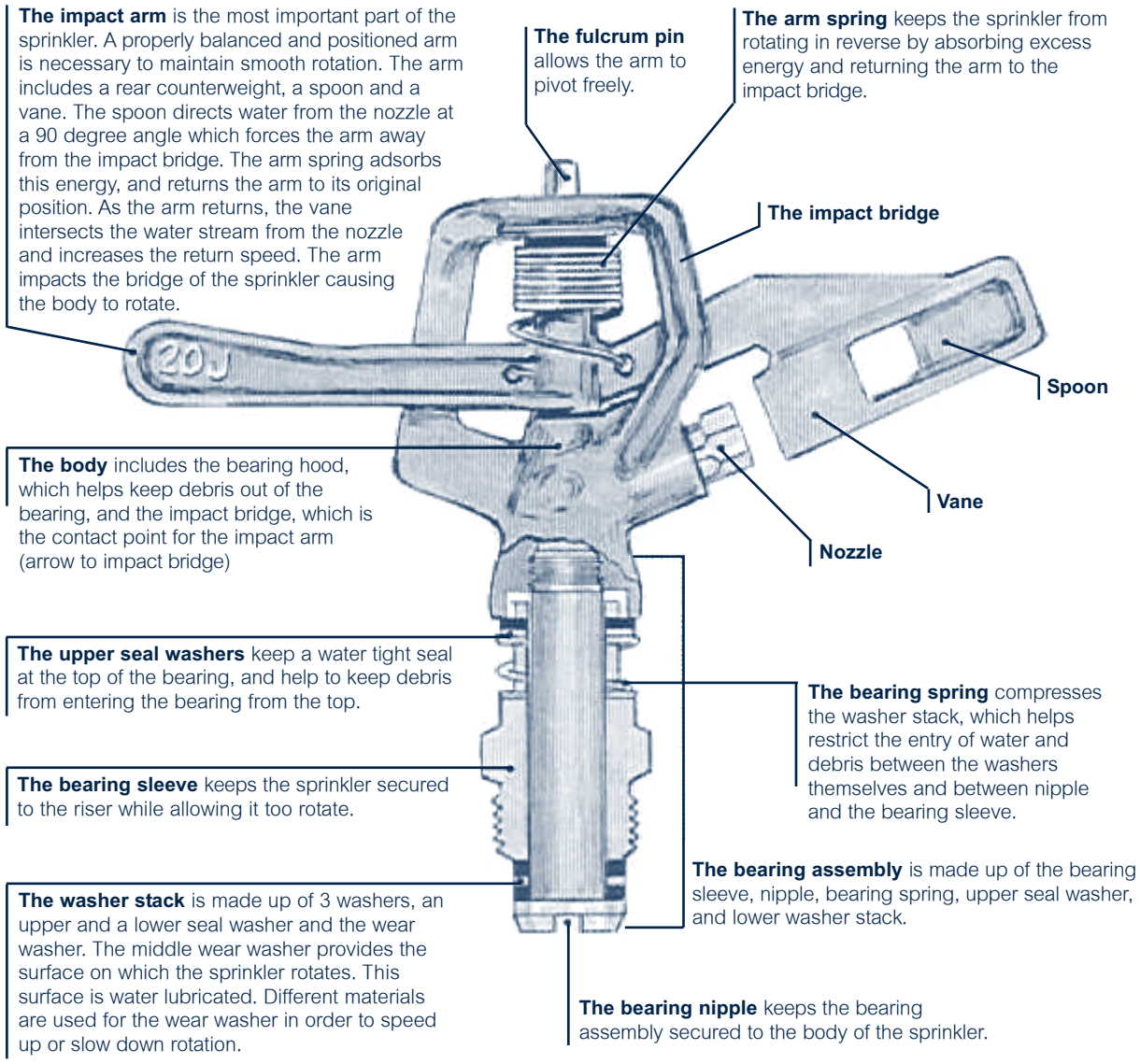

impact bridge, the impact arm with its counter weight, the spoon and the vane, the arm spring, the bearing assembly, which includes a number of washers and the bearing sleeve, and the nozzle.

Water coming out of the nozzle is directed by the spoon at a 90-degree angle, forcing the arm away from the impact bridge. The arm spring, after absorbing this energy, returns the arm to its original position, which hits the bridge and causes the body to rotate.

Not all sprinklers have a bridge. The body of some sprinklers is made of a piece of stainless steel tube on which the arm is attached in such a way so that energy imparted on the spring forces the arm to return, hit the body and make the sprinkler move. Also, some sprinklers use a pyramid shaped plastic piece (wedge) at the end of the arm instead of a spoon shaped arm. Others have a protrusion on the plastic body where the arm hits the body and sets the sprinkler in motion. Figure 10 shows different types of impact sprinklers.

Nozzles come in different shapes and can be made out of the same or different material as the body. The most common nozzle is the straight bore-type. At times it is combined with a wind vane to facilitate better throw under windy conditions. Sprinklers have one or two nozzles. When two nozzles are used, one is of a larger diameter to facilitate long throw, while the second (called a spreader) is of a small diameter, spreading the water in the vicinity of the sprinkler.

Irrespective of the type and size of nozzle, the abrasive action of water impurities results in a gradual change of the size of the nozzle. Depending on the type and load of impurities substantial changes to the nozzle size can be recorded after 1 or 2 years. It is therefore recommended that sprinkler nozzles be periodically checked and replaced every year or every other year, depending on the wear of the nozzle.

Unfortunately, farmers and especially smallholders tend to use the same nozzle for many years. This results in substantial changes in the capacity of the system, shifting the operation of the pumping unit to a different point on the curve, providing lower pressure in order to accommodate the higher flow. In turn the pump would operate under an efficiency that is different from the one adopted at design level (possibly much lower), requiring more input power. Under these circumstances, overloading of the prime mover and serious damage to the motor or engine may be expected.

The trajectory angle is another important element to be considered as it affects the water stream height. This is particularly important for under-tree sprinklers where the lower the height of the stream the less the interference of tree foliage to the water distribution. Some of these sprinklers have a trajectory angle of 10-15 degrees. Also, since the higher the trajectory angle the higher the stream height is, high trajectory angle sprinklers should be avoided under windy conditions.

Most sprinkler manufacturers' catalogues provide information on the performance and characteristics of their products. The catalogues state the model, the size of sprinkler bearing sleeve and its thread (male or female), the nozzle size and type, the material of which the sprinkler is made (metal, plastic, brass, etc.), trajectory angle and some of its important features such as corrosion resistant stainless steel spring and shaft, potential application, etc.

The same catalogues provide charts and/or tables on the performance of each impact sprinkler with different nozzles. As the diameter of throw is affected by the height of the sprinkler, and the wind velocity during testing, some manufacturers provide the height of the riser used in generating this data and the wind velocity. Table 26 presents the performance data (from a manufacturer's catalogue) for an impact sprinkler. In this particular case the riser height was 75 cm and the tests were carried out under 'zero wind'.

Table 26

Impact sprinkler performance data: straight bore nozzle, stream height 1.8 m

Pressure at nozzle	Nozzle size											
	1.98 mm			2.38 mm			2.78 mm			3.18 mm		
	Radius	Flow		Radius	Flow		Radius	Flow		Radius	Flow	
(bars)	(m)	(lps)	(m^3/hr)	(m)	(lps)	(m^3/hr)	(m)	(lps)	(m^3/hr)	(m)	(lps)	(m^3/hr)
1.4	9.4	0.05	0.18	10.4	0.07	0.26	11.0	0.10	0.35	11.1	0.13	0.46
1.5	9.6	0.05	0.19	10.5	0.07	0.27	11.1	0.10	0.37	11.2	0.13	0.48
2.0	10.0	0.06	0.22	10.8	0.09	0.31	11.4	0.12	0.42	11.6	0.15	0.55
2.5	10.2	0.07	0.24	11.0	0.10	0.35	11.6	0.13	0.47	11.8	0.17	0.62
3.0	10.4	0.07	0.26	11.2	0.11	0.38	11.8	0.14	0.52	12.0	0.19	0.68
3.5	10.7	0.08	0.29	11.3	0.11	0.41	11.9	0.16	0.56	12.1	0.20	0.73
4.0	10.9	0.08	0.31	11.4	0.12	0.44	12.0	0.17	0.60	12.2	0.22	0.78
4.1	11.0	0.09	0.31	11.4	0.12	0.45	12.0	0.17	0.61	12.2	0.22	0.79

Figure 10
Various types of impact sprinklers

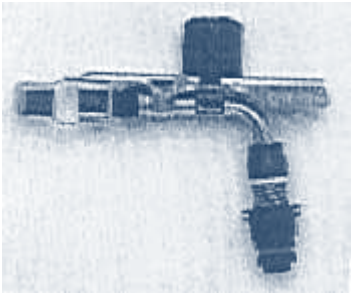

Stainless steel
no bridge

Copper alloys
wedge drive

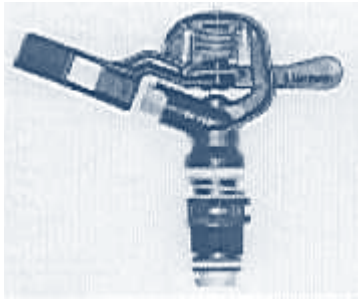

Plastic

Plastic

Plastic
two nozzles

Copper alloys
no bridge

Plastic
no bridge

Plastic
no bridge

Table 27
Impact sprinkler performance data

Pressure (bar)	Nozzle size					
	3.2 x 2.5 mm			3.5 x 2.5 mm		
	Diameter (m)	Flow 1 (m^3/hr)	Flow 2 (m^3/hr)	Diameter (m)	Flow 1 (m^3/hr)	Flow 2 (m^3/hr)
2.0	24	0.52	0.80	24	0.69	0.98
2.5	25	0.58	0.90	25	0.78	1.09
3.0	25	0.63	0.98	25	0.84	1.19
3.5	25	0.68	1.05	25	0.90	1.29
4.0	25	0.72	1.13	25	0.96	1.37

Note: Flow 1 refers to single nozzle; Flow 2 refers to double nozzle.

Table 28
Sprinkler nozzle height above collectors (Source: ASAE S398.1 JAN01)

Sprinkler type	Sprinkler inlet size (nominal pipe diameter)	Minimum nozzle height above collector (mm)
Riser mounted; rotating	1¼inch or smaller	915
Riser mounted; rotating	1½inch or larger	1830
Riser mounted; non-rotating	All	460
Grade mounted; all	All	Sprinkler lid level with the collector in the non-operating position
Hose end, base mounted; all	All	Bottom of sprinkler base to be level with the collector inlet

Table 27 presents the performance data from another sprinkler manufacturer's catalogue. The same catalogue, in addition to giving the model of the sprinkler, the description of the material used, the size of the sprinkler bearing sleeve, provides recommendation on its use and recommends a maximum spacing of 12 m. In this case no information on the height of the riser used during the tests is provided. No information is provided about where the pressure was measured. It could have been at the nozzle or at some point along the riser. Where no wind conditions is stated it is advisable to assumed that the tests were carried out under 'zero wind'.

In both cases the height of the sprinkler nozzle above the collector is not mentioned.

As distribution uniformity varies with sprinkler spacing and field conditions, these data are not included in the catalogues. Nevertheless, some manufacturers of impact sprinklers provide software on the Internet, from where this and other information on the performance of their products can be derived.

The American Society of Agricultural Engineers (ASAE), through ASAE S398.1 JAN01 standard, sets the procedures for testing and reporting sprinkler performance. The scope of this standard is to specify the procedure used only to determine the radius of throw. In summary this standard's purposes are to:

- Define common test procedures for the collection of test data such as pressure, flow rate and radius of throw
- Provide methods for the interpretation of the test data
- Provide a method to readily distinguish which performance specifications have been developed using this procedure
- Assist designers when comparing the basic performance of different sprinklers
- Describe the types and methods of obtaining and recording pertinent test data

According to this standard the sprinkler nozzle height above the collector is defined as per Table 28, the spacing of the collectors is provided in Table 29, and the riser should be made of schedule 40 steel pipe and be of the same diameter as the base of the sprinkler.

Table 29
Spacing of collectors (Source: ASAE S398.1 JAN01)

Sprinkler radius of throw (m)	Maximum collector spacing centre to centre (m)
0.3-3	0.30
3-6	0.60
6-12	0.75
> 12	1.50

The sprinkler inlet pressure should be measured at a point along the riser that is at a distance of at least five times the sprinkler inlet diameter from the last upstream change in diameter or direction of flow. It also specifies that the wind velocity during the test should be less than 0.44 m/s. The same standard provides a complete description of how the test site should be and how the measurements are to be taken and recorded. Sprinklers tested according to this standard and certified as such can incorporate in their specification a specific certification statement.

The performance of the two sprinklers (Tables 26 and 27) does not seem to have been derived by using this standard, since no certification has been stated in their catalogues. Both sprinklers have been on the international market for several years. However, newer sprinklers made by the USA and other manufacturers have been tested according to this standard, as stated in their catalogues.

Comprehensive standards on rotating sprinklers include ISO 7749-1:1995 and ISO 7749-2:1995. These standards specify a number of tests, the test specimens and the acceptance number for each test in accordance to ISO 3951. The following are subject to test under these standards:

1. General requirements
   - Materials
   - Construction and workmanship
   - Threaded connections
   - Performance requirements
2. Strength tests
   - Construction and parts
   - Resistance of threaded connections
   - Resistance to hydrostatic pressure
   - Resistance to hydrostatic pressure at high temperature
   - Water tightness
3. Operating tests
   - Uniformity of rotation speed
   - Uniformity of flow rate
   - Distribution characteristics
   - Effective diameter of coverage
   - Trajectory height
   - Range of effective pressure
4. Durability

The same standards provide detailed descriptions of each test, including the instruments and equipment to be used for these tests, and make provision for the interpretation of the test results.

In 1996, the Standards Association of Zimbabwe published the SAZS 363:1996 standard on irrigation sprayers and rotating sprinklers. This standard was based on the above ISO standards and was prepared by a subcommittee where industrialists, irrigation companies, the University of Zimbabwe, the Ministry of Agriculture and farmers were represented. This standard provides both for the construction and workmanship as well as the performance of this equipment. It prescribes the sampling procedures for testing and several tests required for compliance.

4.1.2. Rotor and gear rotating sprinklers

The technological advances with polymers (plastic material) and the manufacture of plastics over the past 20 years has led to the introduction of new mechanisms for the rotation of sprinklers. The gear-driven sprinklers are mostly used for landscape irrigation. The rotor-types of sprinklers are used for solid set, portable and semi-portable systems in agriculture as well as for landscape irrigation (Figure 11).

Water coming out of the nozzle is directed into an offset channel on the rotor plate, which creates a reactionary drive force that turns the sprinkler. Table 30 presents the performance of one of the rotor sprinklers. Manufacturers of this product claim higher uniformity for the rotor sprinkler compared to impact sprinklers. Another advantage is that the riser vibration caused by the impact sprinkler is avoided.

Table 30
Performance of a rotor sprinkler

Plate options (high angle)	Recommended nozzle	Pressure (bars)				
		2.0	2.5	3.0	3.5	4.0
		Discharge (l/hr)				
Purple	Orange	261	294	323	350	375
Radius: 10.4 - 11.5 m	Purple	311	324	380	412	442
Green	Yellow	366	411	451	487	521
Radius: 11.9 - 12.5 m	Green	413	463	509	550	590
Red	Tan	485	544	597	647	695
Radius: 12.2 - 12.8 m	Red	559	624	685	739	792

Figure 11
Components of rotor sprinklers

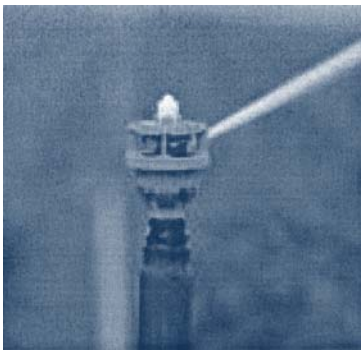

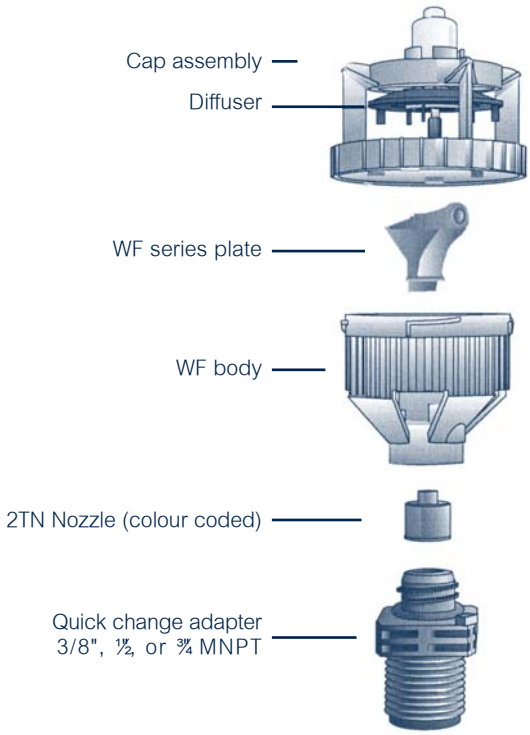

According to the manufacturers, the performance data were recorded under ideal test conditions and thus they may be affected by poor hydraulic entrance conditions, slope, riser tilt, temperature, wind and other factors.

4.1.3. Stationary sprinklers or sprayers

Innovative approaches combined with technological advances with polymers and plastic manufacture have led to the development of several stationary sprinklers and sprayers. ISO 8026:1995 standard is the relevant standard for these products. It describes endurance and performance tests, similar to the rotating sprinkler. Specifically, it calls for the following tests:

- Construction and workmanship
- Resistance of threaded connections
- Resistance to hydrostatic pressure at ambient temperature
- Resistance to hydrostatic pressure at high temperature
- Uniformity of flow rate
- Performance characteristics
- Water distribution curve
- Diameter of coverage
- Spray coverage pattern
- Trajectory height
- Durability

The number of test specimens for each test and acceptance conditions are specified by the same standard to be according to ISO 3951 standard.

Figure 12 shows some of the micro-sprinklers and spray jet heads falling into this category. Table 31 shows the performance of one micro-sprinkler recommended by the manufacturer for trees. It has a flow regulator, it is self-flushing and provides uniform wetting diameter.

According to the manufacturer's catalogue this micro-sprinkler was tested under ideal test conditions. The wetting diameter is based on 50 cm above ground sprinkler height. The working pressure range stated in the catalogue is 1.5-4.5 bar.

An award-winning innovation of stationary sprinklers is the floppy sprinkler, designed and manufactured in South Africa (Figure 13). It is manufactured from stable engineering plastic and silicon tubing. It has a built-in flow controller, making it suitable for undulating terrain. It also has no moving parts and a unique flow pattern.

Figure 12
Various micro-sprinklers and sprayers

Vibro-spray
For orchards or groves (medium diameter)
Flow rate: 20 • 35 • 50 • 60 • 70 • 90 • 120 • 160 l/h

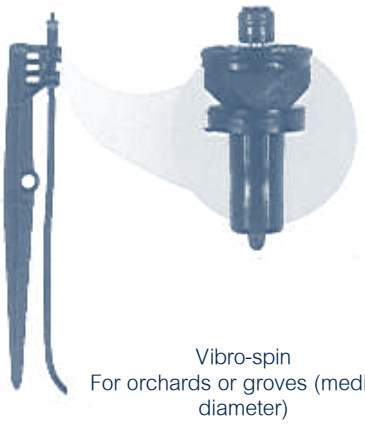

Vibro-spin
For orchards or groves (medium diameter)
Flow rate: 70 • 120 l/h

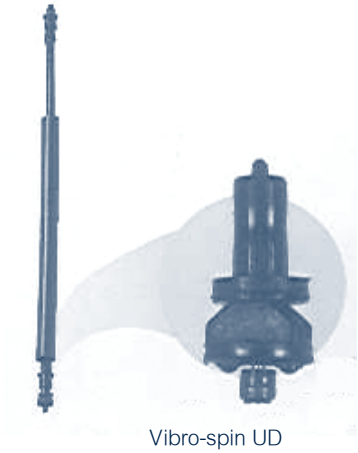

Vibro-spin UD
For Greenhouses
Flow rate: 70 • 120 l/h

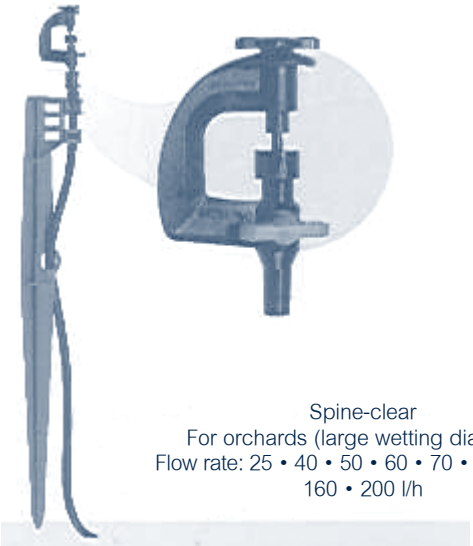

Spine-clear
For orchards (large wetting diameter)
Flow rate: 25 • 40 • 50 • 60 • 70 • 90 • 120 • 160 • 200 l/h

Spin clear UD
For greenhouses
Flow rate: 25 • 40 • 50 • 60 • 70 • 90 • 120 • 160 • 200 l/h

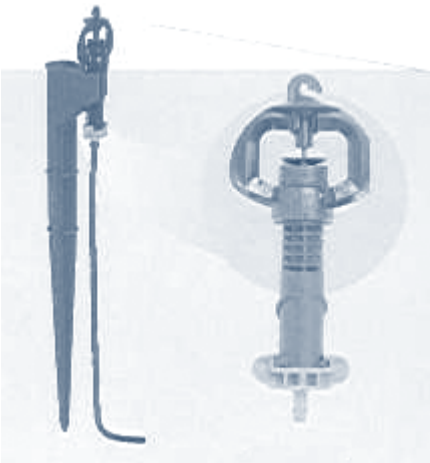

Supernet
Compensated microemitter
Flow rate: 20 • 30 • 40 • 50 • 70 • 90 l/h

- Widest regulating range
- Highest distribution uniformity
- Highest clog resistance
- Durable structure
- User options

Inlet connector options:
Barb
3/8" male threaded
Self tapping

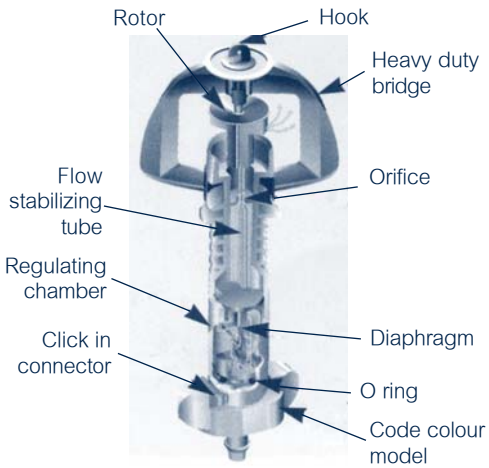

Figure 13
A floppy sprinkler and its flow pattern

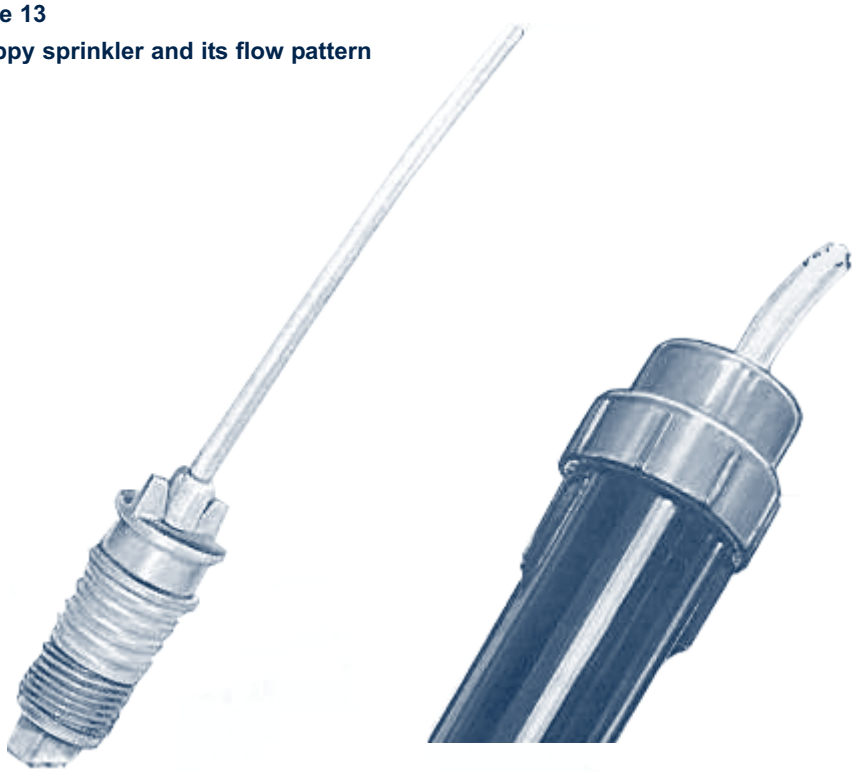

Standard floppy sprinkler

Pop-up floppy sprinkler

Flow patterns of floppy sprinklers

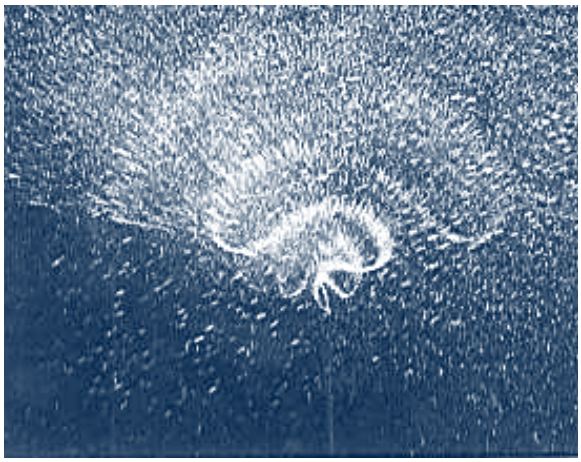

Table 31
Performance of micro-sprinkler

Nozzle size (mm)	Nominal flow (l/hr)	Wetted diameter (m)
0.89	20	5.5
1.14	30	6.5
1.17	35	6.5
1.28	40	6.5
1.43	50	6.5
1.55	58	7.0
1.73	70	7.5
1.74	90	7.5

Figure 14
Floppy sprinkler profile (test done by the Center for Irrigation Technology, Fresno, USA)

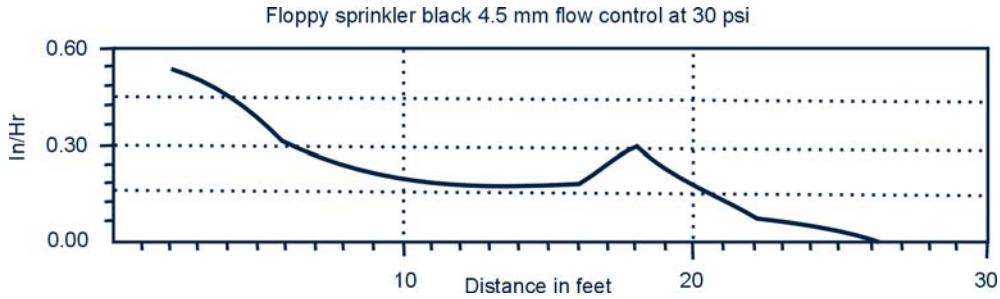

The water both from the sprinkler inlet and through the flow controller reaches the silicon tube, setting the tube in motion and water is spread on the field. The floppy sprinkler requires a minimum of 1 m riser. There are six different models with nominal discharge covering the range of 280-1400 l/hr. A pop-up version is also available. The black model was tested in 1998 for conformity to ASAE standard S398.1 JAN01 at the Centre for Irrigation Technology in California. The results of the test under 2 bar (30 psi) pressure are presented in Figure 14.

4.2. Centre pivot and moving lateral irrigation machines

These machines are composed of a number of self-propelled towers supporting a pipeline with sprinklers or sprayers distributing the water to the field. In the case of centre-pivot systems the self-propelled towers rotate around a pivot point. Moving laterals remain in a straight line, traversing the field in a straight path.

The two standards, ISO 11545:2001 and ANSI/ASAE S436.1 DEC01, both specify the test procedures for the determination of the uniformity of water distribution from centre pivot and lateral move systems. Both standards also specify the layout and size of collectors for each system and, provide details on the location of the collectors in relation to the crop, the height of the nozzle and the wetted radius for both sprinklers and sprayers. The same standards provide details on the collection and analysis of data in deriving the Heermann and Hein coefficient of uniformity for centre pivot systems and the Christiansen coefficient of uniformity for the moving lateral irrigation machine.

4.3. Emitters

4.3.1. Individual emitters

According to ISO 9260:1991 emitters are "devices fitted to an irrigation lateral and intended to emit water in the form of drops or continues flow at emission rates not exceeding 15 l/hr per outlet, except during flushing." The same standard defines emitters as follows:

- In-line emitter: emitter intended for installation between two lengths of pipe (irrigation lateral)
- On-line emitter: emitter intended for direct or indirect (i.e. by means of tubing) installation in the wall of the irrigation lateral
- Multiple outlet emitter: emitter in which the output flow is divided and directed to several distinctly different locations
- Unregulated (non-compensating) emitter: emitter of varying emission rate at varying water pressure at emitter inlet
- Regulated (pressure-compensating) emitter: emitter of relatively constant emission rate at varying water pressures at the emitter inlet within the limits specified by the manufacturer

Figure 15 presents the different types of emitters.

Figure 15
Various types of emitters

On-line pressure-compensating emitters

Flow rate: 2 • 4 • 8.5 l/h

Flow rate: 2 • 4 • 8.5 l/h

Multi-outlet
Each outlet: 2 • 3 • 4 • 8.5 l/h

Flow rate: 2 • 3 • 4• 8 l/h

Flow rate: 1.0 GPH

Flow rate: 2.0 GPH

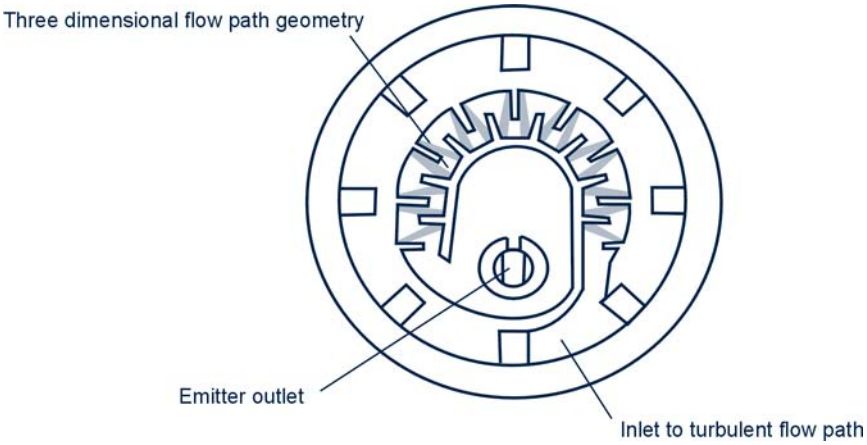

Interior view of a pressure compensating emitter

On-line non-pressure-compensating emitters

Flow rate: 1.15 • 2 • 3 • 4 • 8 l/h

Flow rate: 1.15 • 2 • 3 • 4 • 8 l/h

Flow rate: 1.15 • 2 • 3 • 4 • 8 l/h

In-line pressure-compensating emitters

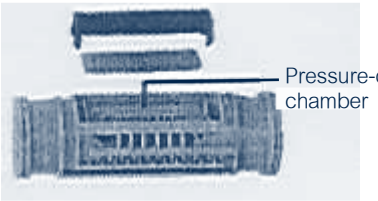

Low pressure

Higher pressure

Diaphragm

The same standard classifies the emitters in two uniformity categories:

- Uniformity category A: emitters having higher uniformity of emission rates and smaller deviations from the specified nominal emission rate and for regulated emitters, better regulation of emission rates
- Uniformity category B: emitters having lower uniformity of emission rates and greater deviations from the specified nominal emission rate and for regulated emitters, inferior regulation of emission rates

ISO 9260:1991 provides general principles on the requirements for the material to be used for the construction of the emitters, and sets requirements on the connections of the emitters to the lateral, and calls for a number of mechanical tests and requirements related to construction and workmanship, flow path, resistance to hydrostatic pressure and emitter pull-out. The standard also describes a number of functional tests and requirements and specifies the sampling procedures and accuracy of measuring instruments to be used for the tests. The uniformity of emission rate test is the basis for classifying the emitters in category A or B. After measuring the emission rate of at least 25 emitters operating under the nominal working pressure, the coefficient of variation (Cv) is calculated from the following equation:

Equation 2

$$Cv = (Sq/\bar{q}) \times 100$$

Where:

Sq = Standard deviation of the emission rates for the sample

$\bar{q}$ = Mean emission rate of the sample

In order for emitters to be classified as category A, the mean emission rate of the test sample shall not deviate from the nominal emission rate (q_n) by more than 5% and the Cv shall not exceed 5%. For category B the mean emission rate of the test sample shall not deviate from q_n by more than 10% and the Cv shall not exceed 10%. Table 32 presents these limits.

Another requirement of this standard is the determination of the emitter exponent for regulated emitters. The standard provides the calculation procedures and states that the emitter exponent shall not exceed 0.2.

ISO 9260:1991 requires that manufacturers make available to the user, together with the emitters, catalogues or information sheets including the following data:

- Catalogue number of irrigation emitter
- The words 'Uniformity category A' or 'Uniformity category B', as applicable
- Types of pipes suitable for use with the emitter and their dimensions
- Type of connection of emitter to pipe
- The dimensions of the smallest flow path in the emitter
- Nominal emission rate
- Nominal test pressure
- Range of working pressure
- Range of regulation (if any)
- Emission rates as function of inlet pressure at different water temperatures
- Regulation characteristics (for regulated emitters)
- Instructions for emitter assembly on pipe
- Instructions for cleaning and replacement of emitters
- Instructions for prevention of clogging of emitters
- Limitations of emitter use (fertilizers, chemicals, etc.)
- Filtration requirements
- Maintenance and storage requirements
- Nominal emission rate during flushing, if applicable

4.3.2. Emitting-pipes

One of the relatively recent technological advances with localized irrigation is the development of the commonly known 'drip tapes' or, according to ISO 9261:1991, 'emitting pipe systems' or, according to ANSI/ASAE S553, MAR01 'collapsible emitting hose'.

ISO 9261:1991 defines an emitting-pipe as "continuous pipe, hose or tubing with perforations or other hydraulic devices formed in the pipe during production and intended to emit water in the form of drops or continues flow, at emission rates not exceeding 15 l/hr per emitting unit". Hence this definition refers to where the emitting unit

Table 32
Uniformity values by category

Category	Parameter	
	Maximum % deviationof $\bar{q}$ from q_n	Coefficient of variation Cv maximum %
A	± 5	± 5
B	± 10	± 10

forms an integral part of the pipe. This standard does not apply to porous pipe.

ANSI/ASAE S553 MAR01 defines collapsible emitting hose as "continuous hose or tubing which discharges water at discrete points along its length through flow regulating passages formed into or attached onto the hose; and having a sufficiently thin wall to permit collapsing when not under pressure." Figure 16 shows different types of drip tape.

ISO 9261:1991 provides for two classifications of emitting pipes based on uniformity of emission rate and regulation, duration of use and type of operation:

- Uniformity category A: emitting-pipes having higher uniformity of emission rates and smaller deviations from the specified nominal emission rate
- Uniformity category B: emitting-pipes having lower uniformity of emission rates and greater deviations from the specified nominal emission rate

The information in Table 32, used for emitters uniformity categories, applies here also.

The two categories of duration of use are non-reusable emitting-pipes and reusable emitting-pipes. Based on the type of operation the same standard refers to unregulated and regulated emitting-pipes.

The same basic requirements and test used for emitters also apply to the emitting-pipes. The objective is to establish the Cv and calculate the emitter exponent. However, additional tests on the mechanical properties of the pipe, such as elongation, resistance to hydrostatic pressure under different temperature conditions, resistance to pull-out of joints and resistance of the pipe to environmental stress-cracking, are prescribed.

ANSI/ASAE S553 MAR01 requires and specifies an additional test, which refers to the measurement of the friction losses of the collapsible emitting hose.

Both standards provide a list of data to be provided by the manufacturer. ISO 9261:1991 also specifies the markings on the emitting-pipe at intervals of 5 m as follows:

- Name of manufacturer or their registered trade mark
- Mark for identification of year of manufacture
- Designation that refers to the emitting-pipe, the ISO standard, the nominal diameter, the nominal emission rate at l/hr, the maximum working pressure in multiples of 100 kPa units and the uniformity class
- Arrow indicating direction of flow (if it affects operation of the emitting-pipe)

Example 2

A pipe is designated and marked as emitting-pipe ISO 9261 16-2-1.2-A. What does this mean?

This implies that this is an emitting-pipe manufactured according to standard ISO 9261. This emitting-pipe has a nominal diameter of 16 mm, the emission rate at each point is 2 l/hr, it is intended for operation at working pressures up to a maximum of 120 kPa (or 1.2 bar) and conforms to uniformity category A.

While there is a similarity between the data supplied by the manufacturer for emitters to those prescribed for emitting-pipes, the ISO 9261:1991 list for emitting pipe demonstrates that there are also differences. Following are the data expected from the manufacturer of this product:

- Catalogue number of emitting-pipe and fitting
- Type of fittings for connecting emitting-pipe to supply network or appliances
- Instruction sheets for proper operation of emitting pipe. The instruction sheets shall be dated
- The word 'Uniformity category A' or 'Uniformity category B', as applicable, including the relevant values given in Table 32
- Details of suitable fittings (including code number as marked on the fitting) for different applications
- Installation instructions for the emitting-pipe and fittings
- Nominal emission rate of unit emitting-pipe
- Inside diameter of emitting-pipe
- Wall thickness of emitting-pipe
- Range of working pressure of emitting-pipe
- Classification of emitting-pipe
- Operating characteristics of emitting-pipe (regulated, non-regulated)
- Limitations of emitting-pipe use (fertilizers, chemicals, etc.)
- Range of regulation, if any
- Filtration requirements
- Spacing of emitting units in emitting-pipe
- Minimum recommended radius for coiling emitting-pipe
- Maintenance and storage requirements
- Nominal test pressure
- Dimensions of smallest flow path in emitting unit

Figure 16
Common types of drip tapes

Pressure compensating drip lines

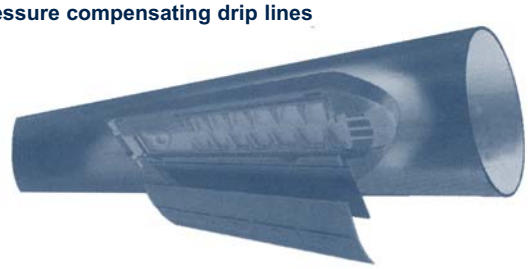

Flow rates: 1.2 • 1.6 • 2.3 • 3.5 l/h

Non-compensating multi-seasonal drip lines

Flow rates: 2 • 4 • 8 l/h

Flow rates: 1.3 • 2.0 • 3.0 l/h

Non-compensating thin-walled drip lines

Flow rates: 0.80 • 1.10 • 1.65 • 2.5 l/h

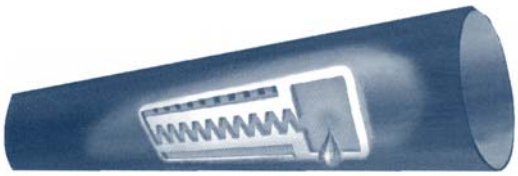

Flow rates: 1.05 • 1.6 l/h

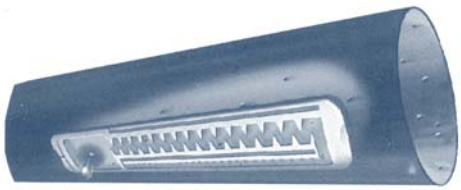

Flow rates: 1.05 • 1.55 • 2.5 l/h

Flow rates: 0.7 • 1.1 • 1.6 • 2.5 l/h

Drip-line with flap outlet

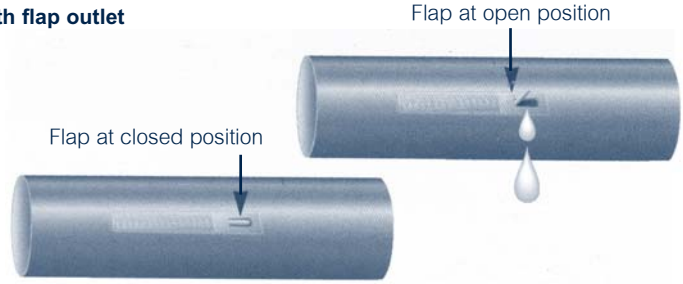

Chapter 5
Pressure and water flow control devices

5.1. Pressure control devices

5.1.1. Pressure regulating valves

A number of pressure regulating devices are available. ISO 10522:1993 covers the direct-acting pressure regulating valve, which it defines as follows:

- *Direct-acting pressure-regulating valve; pressure regulator*: valve in which the water passage widens or narrows automatically to maintain a relatively constant pressure at the outlet of the pressure regulator under varying pressure or flow rates at the inlet of the pressure regulator

Figure 17 shows the cross section of a direct-acting pressure regulating valve.

The same standard also classifies the regulators according to the construction of regulating assembly as:

- *Single-range pressure regulator*: Pressure regulator with a fixed pressure setting which can not be varied
- *Multi-range pressure regulator*: Pressure regulator with alternative pressure settings that may be changed by replacing regulating components (springs, discs etc.) but not by external adjustment
- *Adjustable (single-range or multi-range) pressure regulator*: Pressure regulator whose pressure setting can be adjusted externally without requiring replacement of parts in the regulation assembly

Figure 17
Direct-acting pressure regulating valve (Source: ISO 10522:1993)

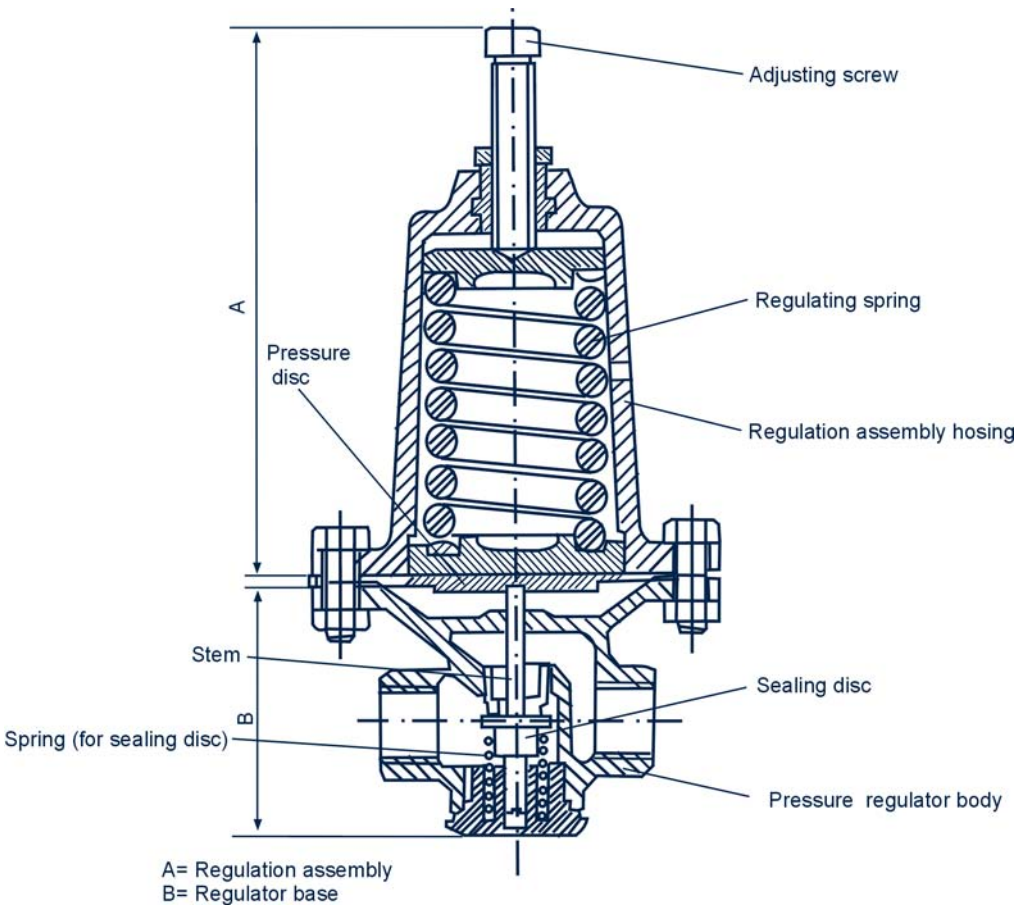

Another classification of the same standard is based on the construction of the pressure regulator:

- *Ordinary pressure regulator*: Pressure regulator intended for installation upstream from an irrigation device and constituting an independent unit
- *Integral pressure regulator*: Pressure regulator which is an integral part of an irrigation device or is fitted specifically to a particular irrigation device

The same standard also provides the following classification according to regulated pressure at zero flow:

- Pressure regulator in which the regulated pressure equals the inlet pressure at zero flow
- Pressure regulator in which the regulated pressure is less than the inlet pressure at zero flow

The last classification of this standard is based on the accuracy level:

- Pressure regulators with accuracy level A (± 10%)
- Pressure regulators with accuracy level B (± 20%)

A number of mechanical and functional tests are specified by this standard, including the regulation uniformity, the regulation curve, regulated pressure as a function of inlet pressures at constant flow rates, pressure losses, durability and others.

Figure 18 presents an example of a regulation curve.

The same standard requires that manufacturers provide general information with regard to the class of the pressure regulator, instructions for installation and operation, spare parts and information on resistance to agricultural chemicals.

Additionally, the following operational data should be provided:

- Nominal pressure
- Declared pre-set pressure
- Initial regulation pressure
- Declared flow rate (in integral pressure regulators)
- Minimum flow rate
- Range of regulated pressure
- Regulation curve
- Regulated pressure as a function of pressure at the inlet of the pressure regulator at constant flow rate at increasing and decreasing pressures
- Accuracy level A or B
- Pressure loss data to be presented according to ISO 9644:1993
- Regulated pressure as a function of adjustment in adjustable pressure regulators
- Regulated pressure at zero flow
- Known limitations (water quality)
- Allowable temperature range

Figure 18
Regulation curve (Source: ISO 10522:1993)

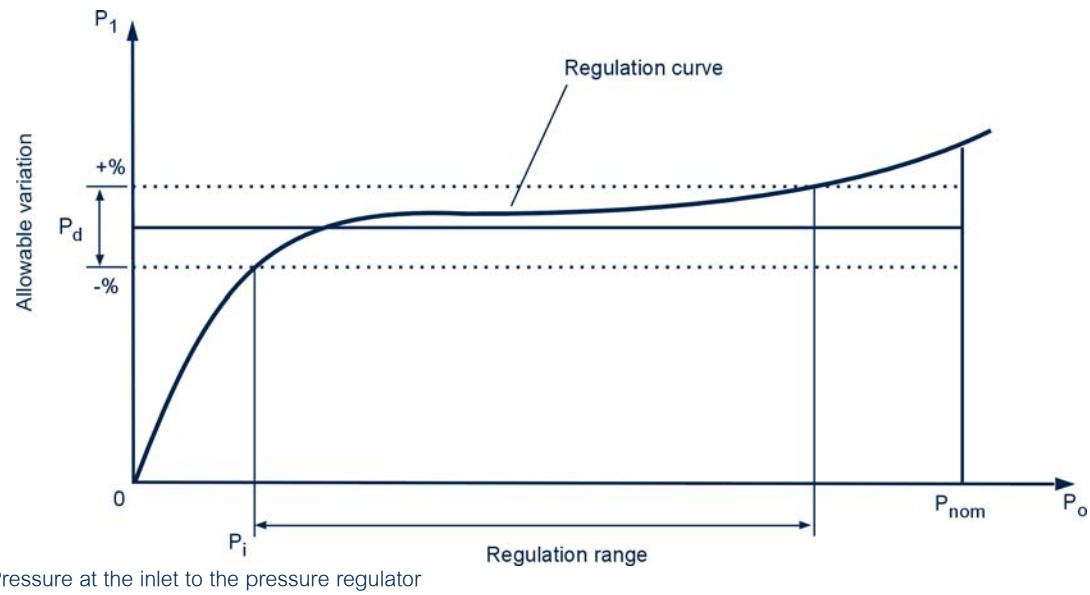

Key

P_0	Pressure at the inlet to the pressure regulator
P_1	Regulated (outlet) pressure
P_d	Declared preset pressure
P_i	Initial regulation pressure
P_{nom}	Nominal pressure

5.1.2. Pressure relief valves

Pressure relief valves are essentially safety devices used in order to avoid pressure developing at above the pressure rating of various components of an irrigation system. At times, these valves are combined with check valves for the protection of pumping stations and the prevention of drainage during flow stoppage.

5.1.3. Pressure gauges

A pressure gauge is an indispensable tool in monitoring the performance of a pressurized irrigation system. It is used with the pitot tube to measure the pressure at the sprinkler nozzle or is inserted at the beginning and end of the drip line and measure the pressure variation within the laterals.

Pressure gauges are also used at the pump outlet to monitor the pressure output of the pump. The pressure differential between the inlet and the outlet of a filtering system would allow decision on when to flush or clean the filter. Pressure measurements before and after the fertilizer injector are necessary so as to facilitate the flow of the liquid fertilizer at the recommended rate.

Pressure measurements at various parts of the system can also facilitate the identification of pipe and fitting breakage or leaks in the system.

As a rule, the metallic glycerin-filled pressure gauges are used for irrigation purposes. At times, they are combined with a fine metal tube for insertion into pressure taps or checkpoints. Figure 19 shows a pressure gauge and relevant accessories.

Very often, pressure measurements can be misleading. The internal mechanism of a pressure gauge is sensitive and requires periodic calibration in a laboratory equipped to undertake this task. This is particularly important when tests are undertaken on the performance of particular equipment (sprinklers, emitters, etc.). It is a standard procedure that before any of these tests is undertaken the pressure gauges to be used for this purpose are calibrated.

5.1.4. Air release valves

According to ISO 11419:1997, air release valves are valves that open automatically to:

- Allow air from the atmosphere to enter the pipeline during draining of the pipeline
- Vent air from the water pipeline to the atmosphere during filling or during normal operation of the pipeline under pressure.

The same standard classifies air release valves according to the purpose into three categories:

- *High-pressure continuous-acting air release valve*: Air release valve with small cross-sectional relief nozzle, which releases pockets of air trapped in the pipeline in proximity to the air release valve when the water is under normal operating conditions (a prevailing hydraulic pressure within the normal working pressure range of the water pipeline) and which allows entry of air into the pipeline at a pressure lower than or equal to atmospheric pressure
- *Low-pressure air release valve*: Air release valve with a large cross-sectional relief nozzle that serves to vent air trapped in the pipeline at high flow rates during filling of the pipeline and to allow entry of air at high flow rates into the pipeline when draining
- *Dual triple-function air release valve*: Air release mechanism that consists of two valves, a high-pressure continuous-acting air release valve and a low-pressure air release valve, which are housed in one unit but operate separately in accordance with their functions. This air release valve has the following functions:
  - It enables continuous release of air from the pipe system at working pressure
  - It allows entry of air at a high flow rate during drainage of water from the piping system
  - It allows release of air at a high flow rate when the pipe system is being filled with water

Figure 19
Pressure gauge and accessories

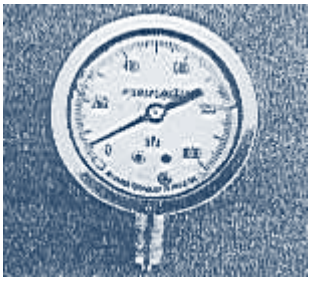

a. Pressure gauge

b. Niddle tubes and pressure taps

Figure 20
Air release valves (Source: ISO 11419:1997)

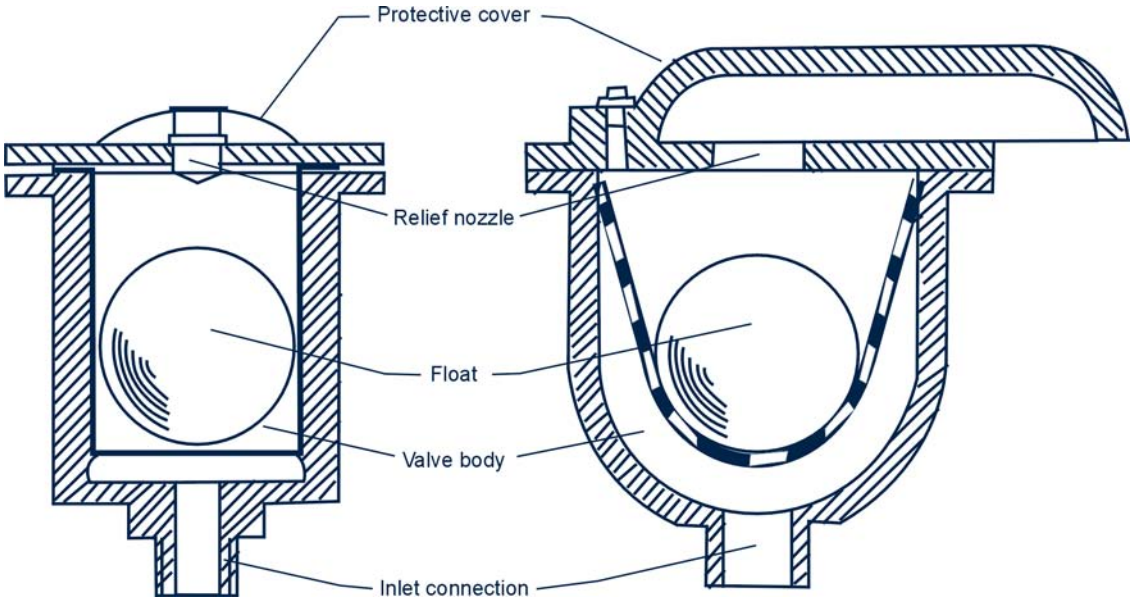

a. High-pressure continuous acting air release valve

b. Low-pressure air release valve

Figure 20 provides a schematic presentation of the low-pressure and high-pressure air release vales.

Another classification provided by the same standard is based on the nominal pressure (maximum static pressure of the water at the inlet of the air valve). It classifies the valves into 1.0 MPa, 1.6 MPa and 2.5 MPa air release valves.

The same standard calls for and describes a number of tests for this device:

- Water tightness of air release valves at nominal pressure
- Water tightness of air release valves at minimum working pressure
- Resistance of air release valve to hydrostatic pressure
- Resistance of air release valve to pressure at high temperature
- Operating test for high-pressure air release valve
- Operating test for low-pressure air release valve
- Operating test for dual triple-function air release valve
- Durability test

The standard also requires that the manufacturers provide the following information:

- Manufacturer's name and address
- Class of air release valve
- Installation, operation and maintenance instructions and information on resistance of air release valve to chemicals used in agriculture
- Nominal pressure
- Minimum working pressure
- Maximum working pressure
- Nominal size
- Tables and diagrams for flow of air through the air release valve as a function of pressure at valve inlet for each nominal size and diameter (or cross-sectional area) of the relief nozzle
- The maximum angle from the vertical (at least ± 5°) at which it is permitted to install the air release valve

5.2. Water flow control devices

5.2.1. Cast iron gate valves

Cast iron gate valves used with pressurized irrigation systems are usually for nominal sizes of 80 mm and above. ISO 5996:1984 distinguishes between gate valves with inside screw stem (non-rising stem) and gate valves with outside screw stem (rising stem). Figure 21 presents the two types of cast iron gate valves. Table 33 provides the respective heights of the two types for some sizes, which is useful for installation purposes.

Figure 21
Cast iron gate valves with non-rising and rising stems (Source: ISO 5996:1984)

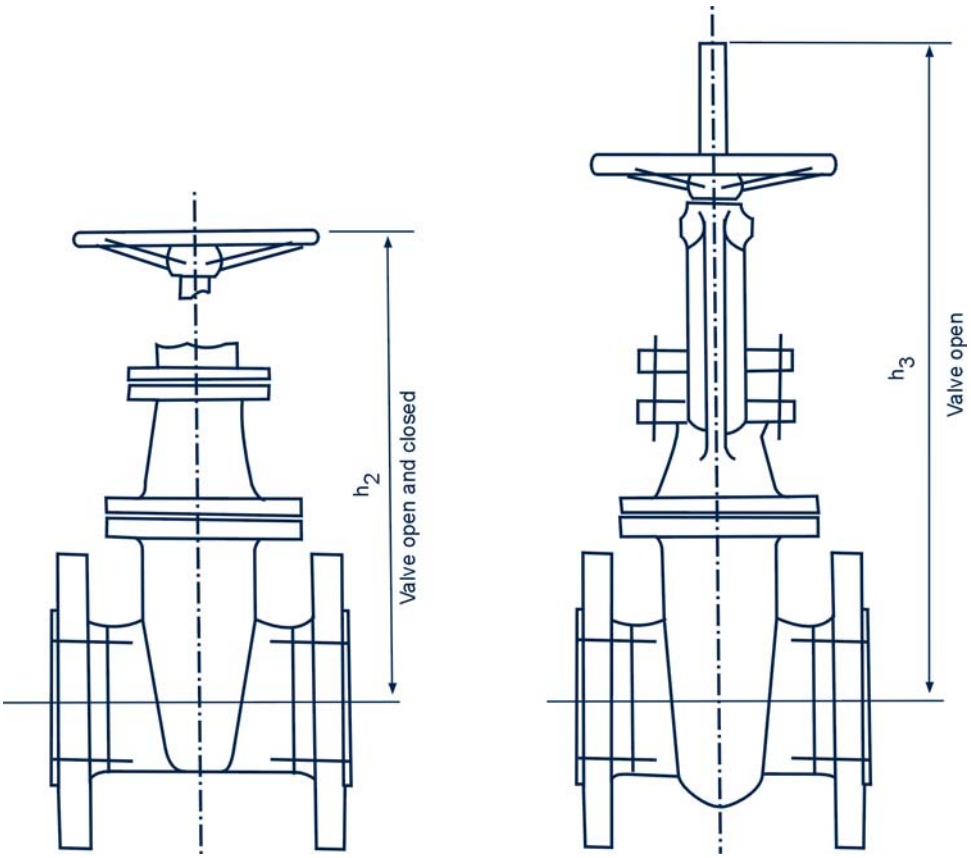

a. Gate valves with inside screw stem (non-rising stem)

b. Gate valves with outside screw stem (rising stem)

Table 33
Maximum heights for some sizes of cast iron gate valves* (Source: ISO 5996:1984)

Nominal diameter (DN) (mm)	h_2 (mm)	h_3 (mm)
80	475	610
100	575	720
125	650	875
150	700	950
200	850	1 200
250	1 025	1 440
300	1 125	1 675
350	1 150	1 900
400	1 275	2 070

* *h_2 and h_3 refer to the respective heights shown in Figure 21.*

The same standard provides different categories, depending on body material trim category (copper alloy faced, stainless steel, copper-free, etc.) and screwed stem. It covers valves with nominal pressure (PN) of 1, 1.6, 2.5, 4, 6, and 10 up to 50 bar for different purposes, depending on the material used. For most irrigation schemes the range would be from PN 6 to PN 16, depending on head requirements.

5.2.2. Brass gate valves

This equipment refers to the commonly-known gate valves with either female or male end thread. Most standards refer to this equipment as *copper alloy gate valves*. Figure 22 shows a typical gate valve with inside thread. Threaded end gate valves come in sizes of ¼-4 inches.

Figure 22
Typical brass gate valve

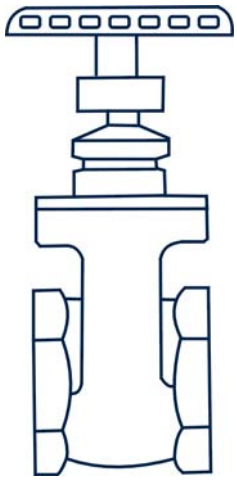

BS 5154:1991 standard requires that gate valves shall be either of the inside screw-type with rising or non-rising stem or of the outside screw-type with rising stem. For the purposes of this standard the following definitions were provided for nominal size (DN) and nominal pressure (PN):

- *Nominal size (DN)*: A numerical size that is common to all components in piping systems other than those components designated by outside diameter or by thread size. It is a convenient round number for reference and it is normally only loosely related to manufacturing dimensions
- *Nominal Pressure (PN)*: A numerical designation, which is a convenient rounded number for reference purposes. It is identical with the definition of ISO 7268

In general terms, the nominal pressure is designated as the maximum static pressure at the inlet of equipment that the equipment can withstand under normal working conditions.

Table 34
Pressure/temperature rating for threaded end gate valves (Source: BS 5154:1991)

Service temperature °C	Maximum permissible working pressure (bar)							
	PN 16		PN 20	PN 25		PN 32		PN 40
	Series A	Series B	Series B	Series A	Series B	Series A	Series B	Series A
-10 to 66	16.0	16.0	20.0	25.0	25.0	32.0	32.0	40.0
-10 to 100	16.0	16.0	20.0	25.0	25.0	32.0	32.0	40.0
-10 to 120	16.0	13.5	17.2	25.0	21.8	32.0	28.3	40.0
-10 to 150	16.0	9.5	13.0	25.0	16.5	31.4	22.8	38.5
-10 to 170	16.0	7.0	10.3	25.0	12.8	29.3	19.2	35.5
-10 to 180	16.0	–	9.0	25.0	11.3	27.5	17.4	34.0
-10 to 186	15.3	–	–	24.1	10.5	26.7	16.2	32.8
-10 to 198	13.7	–	–	21.7	–	24.0	14.0	30.4
-10 to 200	13.5	–	–	21.2	–	23.0	–	30.0
-10 to 220	11.3	–	–	17.5	–	19.6	–	25.5
-10 to 250	8.0	–	–	12.2	–	15.5	–	19.5
-10 to 260	7.0	–	–	10.5	–	14.0	–	17.5

Table 35
Minimum wall thickness for valves having threaded ends (Source: BS 5154:1991)

Thread ends (internal) (inch)	Minimum wall thickness for valves having threaded ends (mm)				
	PN 16	PN 20	PN 25	PN 32	PN 40
1/4	1.5	1.6	1.7	1.8	2.0
3/8	1.6	1.7	1.8	1.9	2.1
1/2	1.7	1.8	1.9	2.1	2.4
3/4	1.8	2.0	2.1	2.3	2.6
1	2.0	2.1	2.4	2.6	3.0
11/4	2.2	2.4	2.6	3.0	3.4
11/2	2.3	2.5	2.8	3.2	3.7
2	2.5	2.8	3.2	3.7	4.3
21/2	2.8	3.2	3.7	4.3	5.1
3	3.1	3.6	4.1	4.8	5.7
4	3.5	4.0	4.6	5.4	6.4

According to BS 5154:1991 standard threaded valves shall be designated by nominal pressure (PN) and selected from the following: PN 12, PN 16, PN 25, PN 32, PN 40.

The size range of threaded ends specified by the same standard is 1/4, 3/8, 1/2, 3/4, 1, 11/4, 11/2, 2, 21/2, 3 and 4. It also classifies valves in series A and series B and provides the composition of materials used for the different parts for each series as well as the combination of temperatures and pressure rating. Table 34 provides the service temperature and pressure rating combinations for threaded end gate valves.

BS 5154:1991 also provides the minimum wall thickness for the various sizes of threaded end gate valves and their pressure rating, as presented in Table 35.

5.2.3. Plastic valves

ISO 9911:1993 refers to manually-operated plastic valves of nominal sizes up to and including 90 mm, used for irrigation purposes. They are made of unplasticized polyvinyl chloride (PVC-U), polyethylene (PE) or polypropylene as per the respective ISO standards. They come for solvent weld ends attached to the unions, flanged, of female thread. Figure 23 shows a variety of plastic valves.

The two ball valves diagrams (Figure 23a) refer to the pressure rating provided in a manufacturer's catalogue (Table 36). The left diagram refers to flanged connection while the right diagram refers to solvent weld union connection. A ball valve is a valve where a ball can be turned to align its opening with the ports of the valve to control the flow.

Table 36
Technical specifications of PVC ball valves

Nominal diameter (mm)	Maximum operating pressure at 20°C (kg/cm^2)
20	16
25	16
32	16
40	10
50	10
63	10
75	6
90	6

Figure 23
Plastic valves

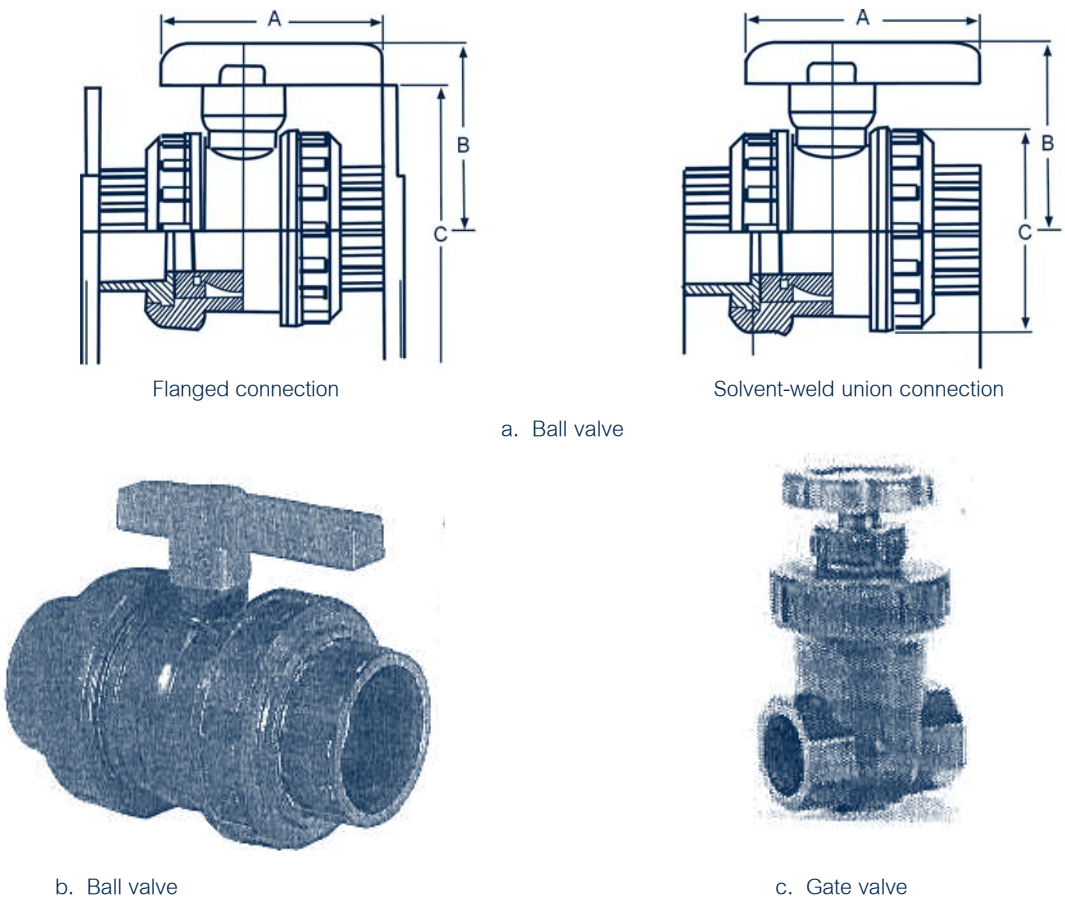

Flanged connection

Solvent-weld union connection

a. Ball valve

b. Ball valve

c. Gate valve

Other related standards include the ISO 12092:2000 for test methods on resistance to internal pressure, ISO 9644:1993 for test methods on pressure losses, ISO 7508:1985 and ISO 8242 on basic dimensions, and ISO 8233 on torque test methods. ISO 8659:1989 specifies test methods for fatigue strength.

ISO 9911:1993 specifies the following tests:

- Technical characteristics
- Closing torque
- Resistance to increased torque
- Pressure loss
- Resistance of valve and valve material to internal hydrostatic pressure
- Plastics moulded material
- Shell test
- Seat and stem sealing test
- Valve performance at increased hydraulic pressure
- Endurance test

It also specifies that the torque required to open and close these valves at nominal pressure shall not exceed the closing torque specified in Table 37.

Table 37
Closing torque

Nominal diameter		Closing torque
mm	inch	(N m)
20	½	1.5
25	¾	3
32	1	5
40	1 ¼	7.7
50	1 ½	11
63	2	20
90	3	30

5.2.4. Hydraulically-operated valves

ISO 9635:1990 defines a hydraulically-operated valve as a valve operated by means of water pressure. It specifies performance and construction requirements and test methods for hydraulically-operated valves for irrigation purposes. It applies to valves from 15 mm upwards.

To close the valve, water pressure is induced in the upper chamber, forcing the diaphragm to close the water passage. To open the valve, the water trapped in the upper chamber is released to the atmosphere or downstream in the pipeline. A spring facilitates the return of the diaphragm to its original position and opens the water passage. An external source of pressure could be used for the operation of the valve also. Figure 24 shows the opening and closing positions of a hydraulically-operated valve.

Through combination of these valves with other hydraulic and electrical controls, they can be used for pressure regulation and automation of irrigation.

ISO 9635:1990 classifies these valves according to the operating mechanism into:

- Diaphragm-type operating mechanism:
  - Diaphragm serves to activate the operating mechanism and to seal the valve
  - Diaphragm serves only to activate the operating mechanism
- Piston-type operating mechanism

The same standard calls for a number of tests, including resistance to hydraulic pressure, closing and opening of valve, pressure loss and endurance. It explicitly states that "in no case shall the duration of closing time, t, in minutes, exceed the time calculated from the formula $t = (0.2vd) - 0.5$, where d is the valve diameter."

This standard calls for the manufacturer to provide the following information:

Figure 24
Opening and closing positions of a hydraulically-operated valve

a. Closed b. Open

- General information:
  - Name and address of manufacturer
  - Classification of valve
  - Instructions for installation and operation
  - Information on resistance of valve to agricultural chemicals
- Operational data:
  - Nominal pressure in kilopascals
  - Minimum working pressure in kilopascals
  - Minimum and maximum operating pressure (if the activating chamber is operated by an external pressure source)
  - Pressure loss data
  - Known limitations of use (i.e. water quality)
  - Recommended range of flow rates
  - Technical data in tabulated form for flow rates and corresponding pressure loss, and pressure and corresponding duration of opening and closing time duration in tabulated form

5.2.5. Volumetric valves

According to ISO 7714:2000 a volumetric valve is a "valve capable of automatically delivering preset volumes of irrigation water at various flow rates as a result of measuring the volume of water flowing through the valve."

Volumetric valves can be serial, which means that valves are intended to operate on series, and non-serial (Figure 25), intended to operate alone.

ISO 7714:2000 defines two-way and three-way serial volumetric valves as follows:

- *Two-way volumetric valve*: serial volumetric valve with one inlet and one outlet, intended for connection in parallel in a system of volumetric valves designed to be opened by means of a hydraulic command when preset to the open position and which, on closing after delivering a preset volume of water, transmits a hydraulic command to the next volumetric valve in the series.
- *Three-way volumetric valve*: serial volumetric valve with one inlet and two outlets, normally open when the pressure at the inlet is the atmospheric pressure and designed so that when a preset volume of water has passed through the first outlet, this outlet shuts off automatically, the second outlet opens automatically and all the flow is passed through the second outlet to the next volumetric valve in the series.

The same standard provides the flow rates and dimensions for threaded and flanged volumetric valves (Table 38).

ISO 7714:2000 specifies the tests on resistance to hydrostatic pressure, manual opening and closing, accuracy, head losses and durability. It further classifies the valves in three classes based on accuracy as per ISO 4064-3. It also calls for the suppliers to provide the following information:

- General information:
  - Name and address of manufacturer
  - Installation instructions
  - Instructions on connecting and operating serial volumetric valves
- Operational data:
  - Maximum working pressure
  - Minimum working pressure
  - Maximum flow rate (l/min or m^3/hr)
  - Nominal flow rate (l/min or m^3/hr)
  - Minimum flow rate (l/min or m^3/hr)
  - Curves of the head losses between the valve inlet and each of the valve outlets for three-way serial volumetric valves
  - Accuracy of measurement according to class
  - Classification

Figure 25
Non-serial volumetric valve with and without solenoid valve (Source: ISO 9952:1993)

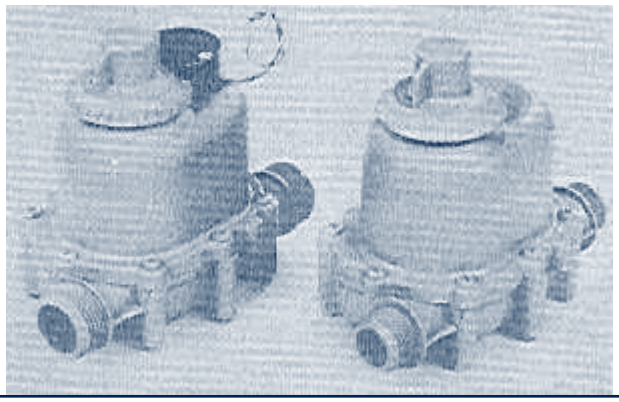

Figure 26
Various types of check valves (Source: ISO 9952:1993)

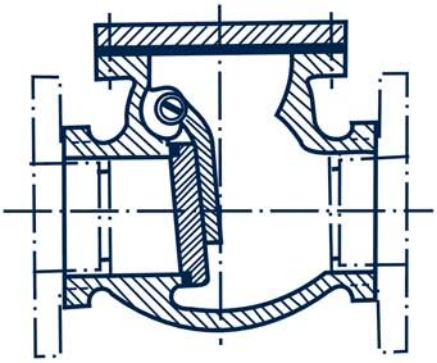

a. Swing-type check valve

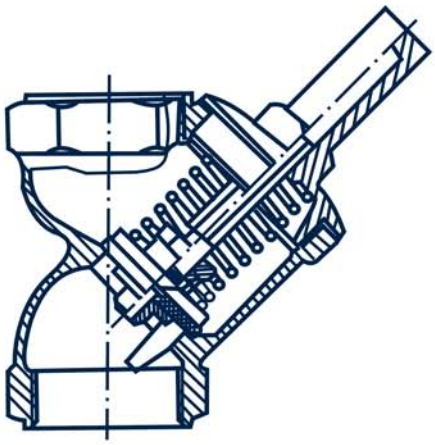

b. Oblique check valve with lift-type disc

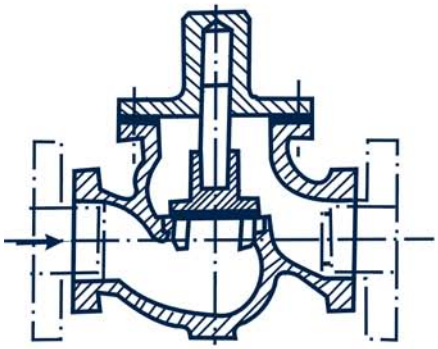

c. Lift-type check valve with disc

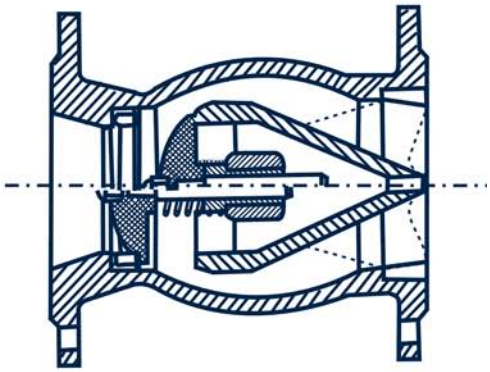

d. Venturi profile check valve

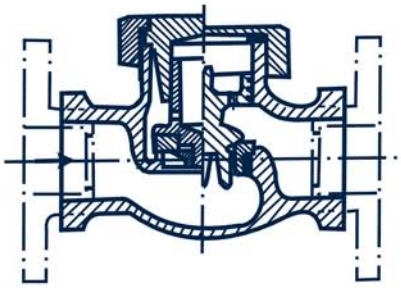

e. Lift-type check valve with piston

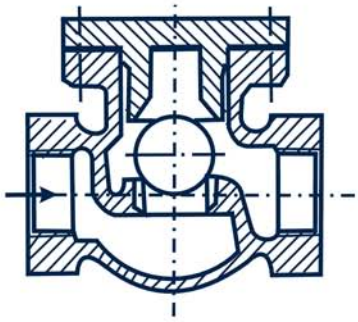

f. Ball-type check valve for horizontal installation

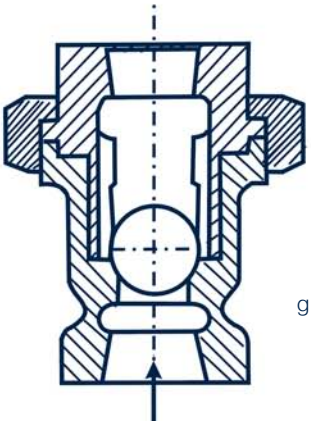

g. Ball-type check valve for vertical installation

Table 38
Flow rates and dimensions of volumetric valves

Designation of thread*	Nominal flow rate (m^3/hr)	Nominal diameter of flange** (mm)	(inch)
G 3/4 B	1.5	–	–
G 1 B	5	–	–
G 11/2 B	12	–	-
G 2 B	20	50	2
G 3 B	40	80	3
G 4 B	60	100	4
–	150	150	6
–	250	200	8
–	400	250	10
–	600	300	12

* *In accordance with ISO 7-1*
** *In accordance with ISO 7005-1 and ISO 7005-2*

- Maintenance and replacement of parts:
  - Recommended frequency for the various maintenance operations;
  - Recommended frequency for replacement parts.

5.2.6. Check valves

Check valves or non-return valves are valves that allow the flow of water in one direction and prevent the return of the flow from the opposite direction. They open by the flow of the water and close through mechanical means when there is no flow (spring, weight of check mechanism).

ISO 9952:1993 classifies check valves based on the check mechanism into five classes:

- Swinging disc (Figure 26a)
- Push or lift disc (Figure 26b and c)
- Push or lift disc – Venturi profile (Figure 26d)
- Piston (Figure 26e)
- Ball (Figure 26f and g)

The same standard classifies check valves on the basis of installation as:

- Horizontal position only (Figures 26a, b, e and f)
- Vertical position only (Figure 26g)
- Any position (Figure 26c and d)

The same standard specifies a number of tests, including resistance of valve to internal hydrostatic pressure, pressure losses, endurance and others.

According to this standard, manufacturers are required to provide general information including installation and operating instructions, classification of the valve as above, information on the metals and plastics used in manufacturing the valve and their resistance to agricultural chemicals and information on the valve body thread. Additionally the following operating data are required:

- Nominal pressure in kilopascals
- Pressure losses data presented in accordance to ISO 9644:1993
- Known limitations (water quality, temperature)
- Mass, dimensions, assembly drawings

5.2.7. Line-flushing valve

A line-flushing valve is used for flushing drip lines and is a type of hydraulic valve. It is normally open at the beginning of each irrigation cycle. While pressure builds up in the lateral, the water velocity flushes the dirt through openings. The small quantity of water flowing into the upper chamber causes the diaphragm to close the openings. Figure 27 provides the details of this valve.

5.2.8. Water meters and flow meters

A distinction should be made between water meters and flow meters. A water meter measures the volume of water going through the system. Its readings are in volume, which is litres or m^3. A flow meter measures the flow rate. Its readings are in l/min, l/sec or m^3/hr. With the assistance of a stopwatch the readings of the water meter can be transformed to flow rate.

As a rule, small flow meters are used with fertigation units and after small filters. Any reduction in the flow rate would indicate blockages. Essentially they are plastic transparent graduated tubes, connected to the system on the one end and closed at the other end. A float inside the tube indicates the flow rate on the graduation.

Figure 27
Line-flushing valve

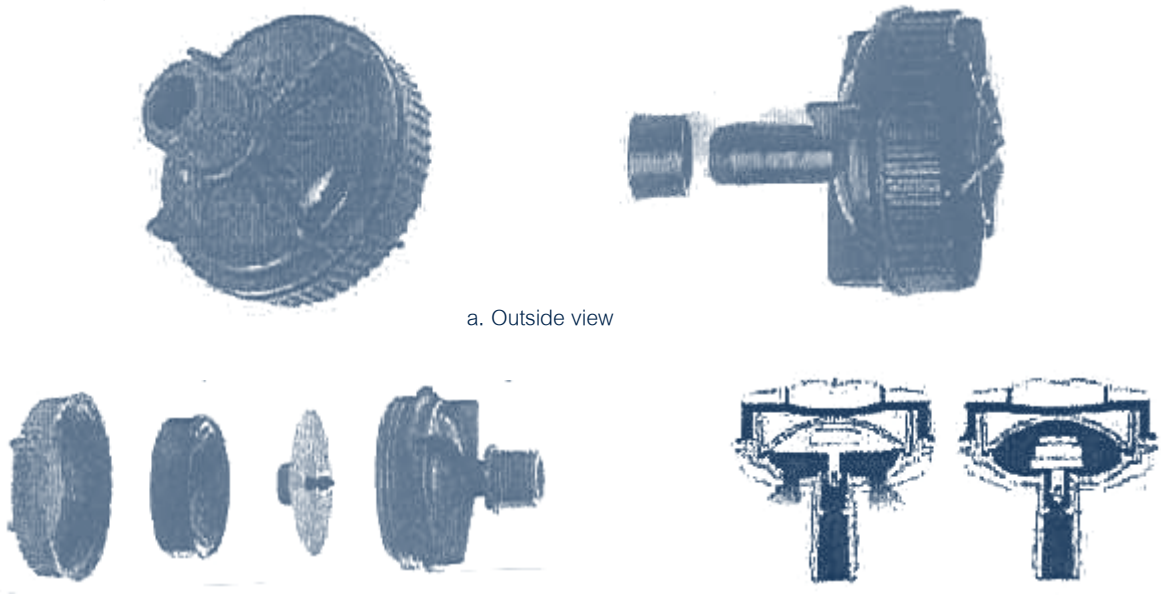

a. Outside view

b. Components

c. Open

d. Closed

Water meters are measuring instruments that continuously determine the volume of water that passes through them. Figure 28 shows the cross-section of a water meter. ISO 4064-1:1993 specifies water meters capable of withstanding continuous flow rates from 0.6-4 000 m^3/hr, maximum admissible working pressure (MAP) equal or greater than 10 bar and maximum admissible temperature (MAT) of 30° C.

For the smaller sizes, up to 50 mm, threaded water meters are available. For 50 mm and above, water meters come with flanged ends. According to ISO 4064-1:1993 there are the following three types of indicating devices:

- *Analogue devices*: The volume of water is given by continuously moving pointers relative to graduated scales (circles). Usually next to each graduated scale a multiplying factor (x 0.001, x 0.01, x 0.1, x 1, x 10, x 100, x 1 000, etc.) is indicated. Measurements are expressed in m^3. Alternatively, each scale is graduated in values expressed in m^3
- *Digital devices*: The volume is given by a line of adjacent digits appearing in one or more apertures
- *Combination of analogue and digital devices*: It combines both types described above. The lowest values of the digital indicator may have a continuous movement

Irrespective of the type of indicating device, ISO 4064-1:1993 requires that the indicating range is based on the permanent flow rate (q_p), which is the flow rate at which the meter is required to operate in a satisfactory manner under normal condition of use. Table 39 provides the indicator range based on q_p.

Figure 28
Cross-section of a water meter (Source: FAO, 2001)

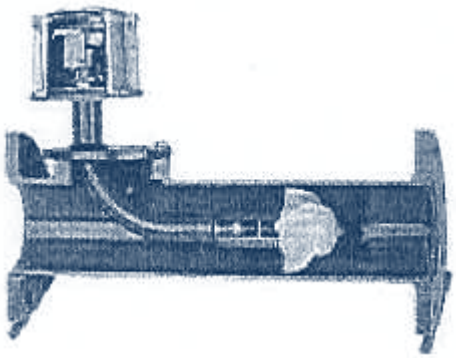

Table 39
Indicator range (Source: ISO 4064-1:1993)

q_p (m^3/hr)	Indicator range minimum (m^3)
$q_p < 5$	9 999
$5 < q_p < 50$	99 999
$50 < q_p < 500$	999 999
$500 < q_p < 4\ 000$	9 999 999

Therefore, the larger the q_p of a meter, the higher the minimum range of the indicator.

ISO 4064-2:2001 specifies the installation requirements and selection of a water meters. The following general considerations apply in selecting a water meter:

- The available supply pressure
- Physical and chemical characteristics of water
- Acceptable pressure loss across the meter
- The expected flow rates
- The suitability of the meter type to the intended installation

The same standard specifies fittings for use upstream and downstream of the meter during installation. The most important means are the following:

Upstream side:

- A valve, preferably with the direction of the valve operation indicated
- A flow-straightening device and/or a straight length of pipe fitted between the valve and the meter. The commonly accepted rule of thumb calls for the length of this pipe to be 10 times the diameter. However, the longer the pipe the better
- A strainer between the valve and the meter to be located upstream of the straight length of pipe

Downstream side:

- An adjustable length device to allow for easy installation and removal of the water meter
- A device including a drain valve that may be used for water sampling and pressure monitoring
- A gate valve and a check valve

It should be pointed out that the rule of thumb calls for a length of straight pipe of 5 times the diameter to be installed after the water meter.

ISO 4064-3:1999 provides the test methods and lists equipment. It specifies the test rig and tests for measuring error under various conditions, pressure tests, pressure loss tests, accelerated wear tests and provides requirements for permitted tolerances in measurement of physical quantities associated with the testing of water meters.

Chapter 6
Speciality items

A number of items for pressurized systems fall in this category of speciality items, such as the different types of equipment used for water filtration and the equipment used for the injection of chemicals in the irrigation water. As a rule, this equipment is part of the irrigation control head of the system. It would therefore be appropriate to broaden the scope of this chapter by firstly introducing the control head and then the options available for filtration and chemigation.

6.1. Irrigation control head

ISO 11738:2000 defines irrigation control head as the "assembly of components and pipes installed at the head of an irrigated area, which serves to control the functioning of an irrigation system from the aspect of initiating and shutting off the flow of water, pressure regulation, water metering, and injection of chemicals".

The same standard, while recognizing that most irrigation control heads fulfil a number of functions simultaneously, classifies the irrigation control heads according to their function in order to facilitate reference to these functions. The following classes of irrigation control heads are stated:

- Irrigation control head for filtration
- Irrigation control head for automation
- Irrigation control head for pressure or flow regulation
- Irrigation control head for chemigation
- Irrigation control head for measuring flow rate and/or volume
- Irrigation control head for safety

The standard also provides schematic presentations of the different irrigation control heads in the form of an informative annex presented in Figures 29-33.

Figure 29
Irrigation control head for filtration (Source: ISO 11738:2000)

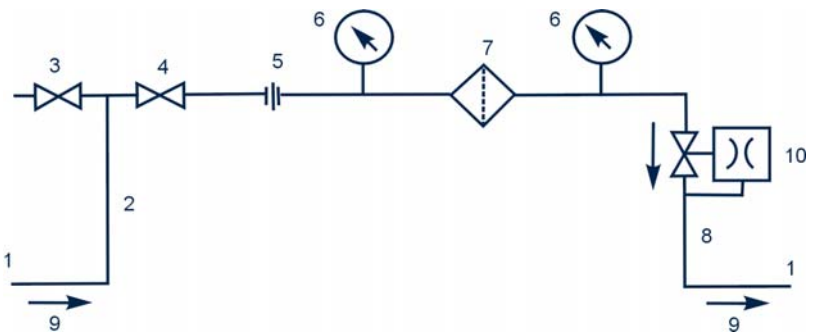

1 = Main line
2 = Inlet of the irrigation control head
3 = Flushing valve
4 = Activating valve
5 = Union
6 = Pressure measurement tapping
7 = Filter
8 = Outlet of the irrigation control head
9 = Direction of flow
10 = Pressure regulator

Figure 30
Irrigation control head for automation and pressure regulation (Source: ISO 11738:2000)

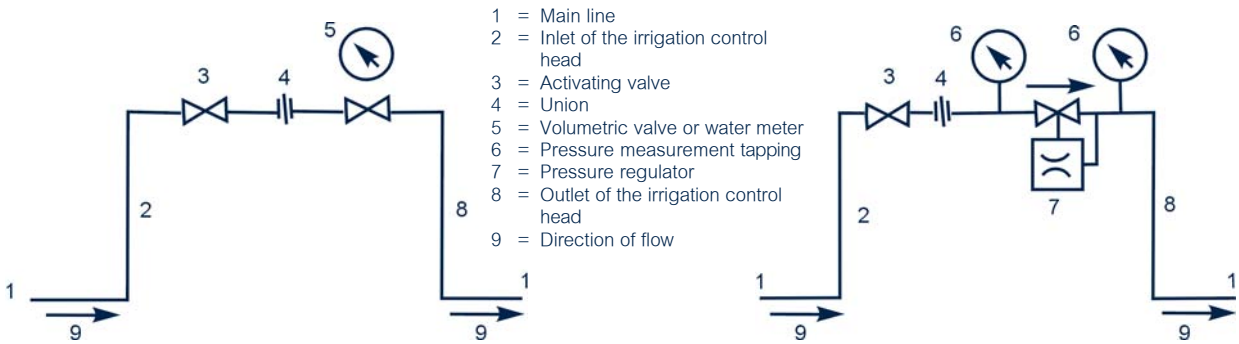

1 = Main line
2 = Inlet of the irrigation control head
3 = Activating valve
4 = Union
5 = Volumetric valve or water meter
6 = Pressure measurement tapping
7 = Pressure regulator
8 = Outlet of the irrigation control head
9 = Direction of flow

a. Irrigation control head for automation with volumetric valve or metering

b. Irrigation control head for pressure regulation

Figure 31

Irrigation control head for filtration and pressure regulation (Source: ISO 11738:2000)

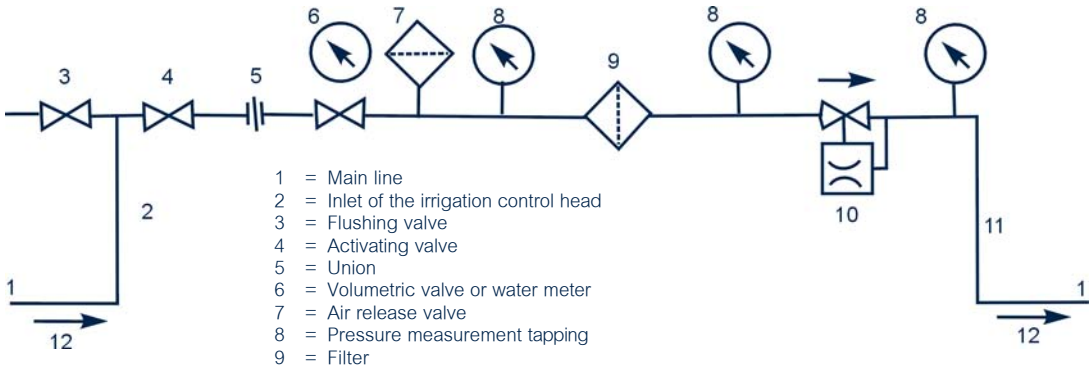

Figure 32

Irrigation control head for filtration with media filter (Source: ISO 11738:2000)

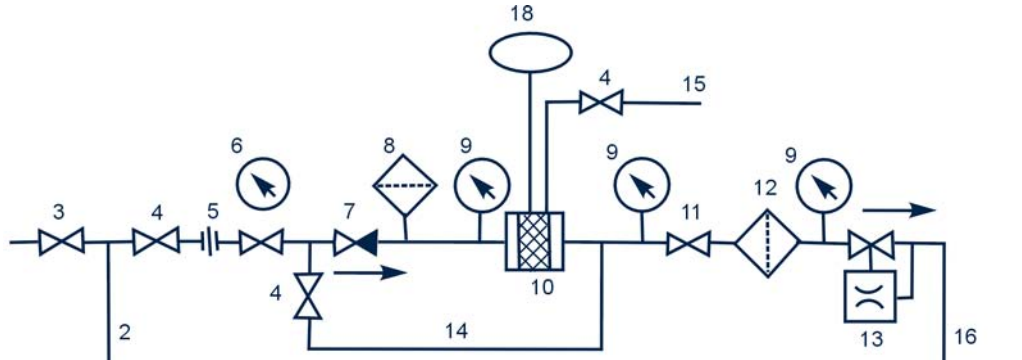

Figure 33

Irrigation control head for chemigation (Source: ISO 11738:2000)

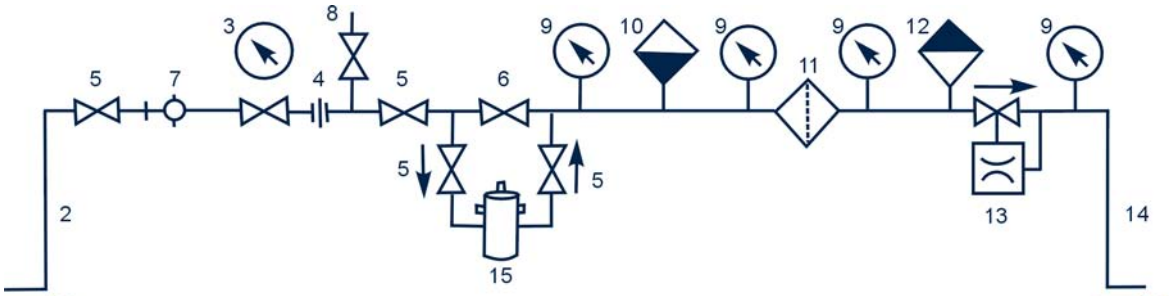

In practice the irrigation control heads can be simple or sophisticated, incorporating filtration, automation, chemigation, pH, electrical conductivity control and the relevant automation controls. The choice depends on the requirements of the particular scheme and the prevailing conditions with respect to availability, cost and quality of labour, value of the crop and availability, cost and quality of irrigation water. Figure 34 shows pictures of some of the multipurpose irrigation control heads.

ISO 11738:2000 specified tests and requirements for the irrigation control head are outlined below:

6.1.1. Visual inspection

Through visual examination of the following should be ensured:

- The various components should be assembled according to the drawings and in accordance with the direction of flow marked on the individual components
- Since the distance between the different flow meters, water meters, volumetric valves, pressure regulators, pressure taps and other equipment affects their functioning, they should be installed according to the distances required between the various components
- Where chemigation is incorporated in the irrigation control head, back-flow prevention devices should be incorporated
- The means used for the installation of the control head should ensure its stability
- Arrangements should be made during installation for the removal of any water from flushing the filters or from water-driven fertilizer injector pumps or other devices

Figure 34
Multipurpose irrigation control heads

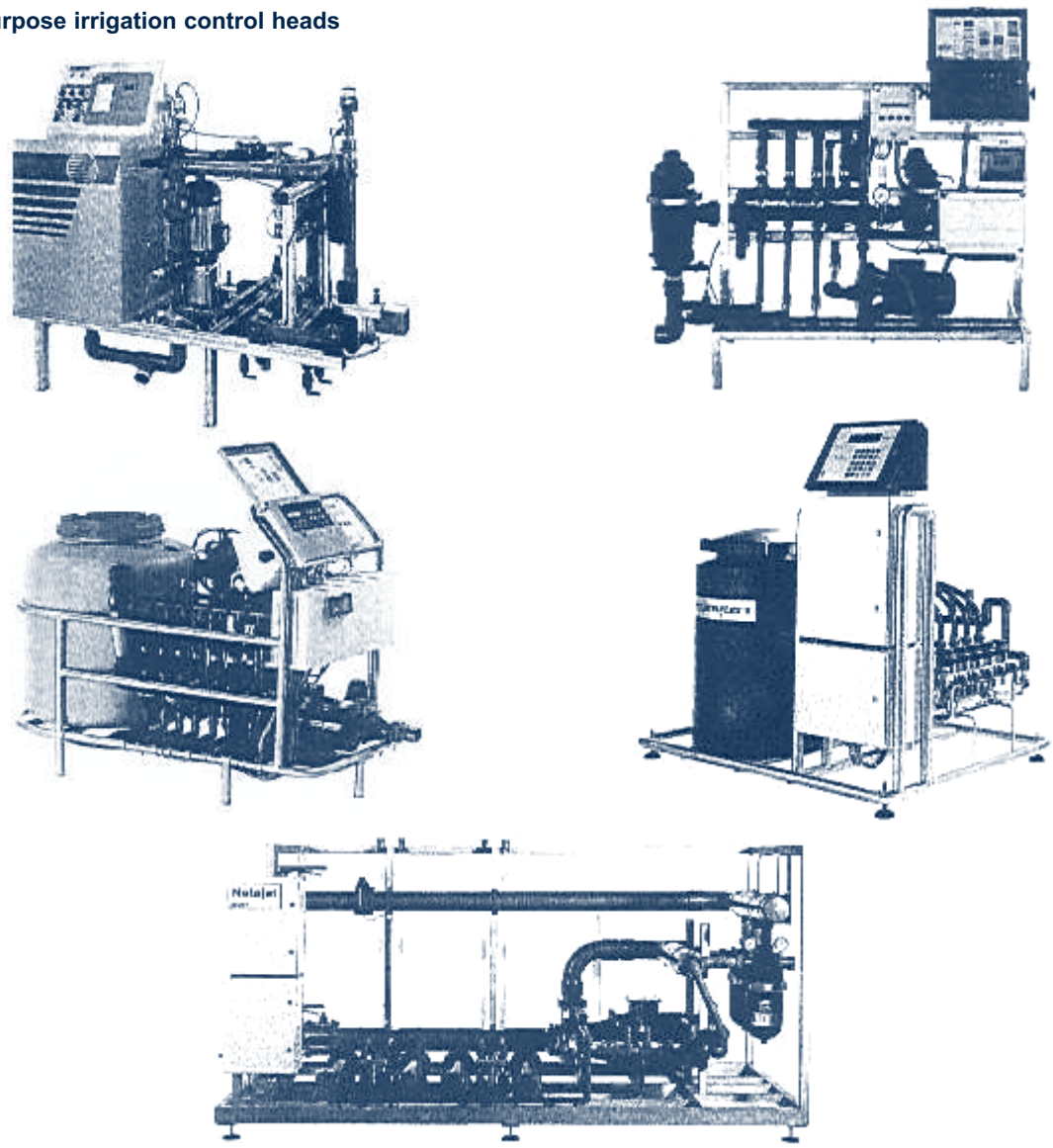

6.1.2. In-situ test of resistance and water tightness under hydraulic pressure

The following steps need to be followed:

- Open the valves and actuators of all components and ensure that water has reached all components and take measures to vent the system
- Close the outlet of the irrigation control head
- Open the valves and actuators slowly in order to avoid water hammer and pressure spikes
- Apply water pressure to the inlet to the level of the nominal pressure of the component with the lowest nominal pressure or to the maximum design pressure of the irrigation control head. After applying this pressure for 15 minutes there should be no leakage from any of the components, connections or joints nor any defects visible
- Apply for 5 minutes 1.6 times the pressure applied under the previous test. None of the components should be damaged
- If necessary, use an auxiliary system to obtain the required pressure

6.1.3. Test of operation

Under this test all the components of the irrigation control head are activated and operated by opening and closing, as required for the normal operation of the system and as specified by the manufacturer. All components should function satisfactorily.

6.2. Filtration

In Module 9 the causes of emitter clogging and the subject of water treatment were discussed, as were a number of measures, including filtration and the use of chemicals for the removal of water impurities (chemical, biological and physical). It is therefore advisable that the reader refers to Module 9 for the overall aspects of water treatment for localized irrigation systems. In the following sections equipment used for filtration will be discussed.

Filters can be classified into manual and automatic filters. They can be further divided into sand separators, screen filters, disc filters and sand/gravel media filters. Combinations of sand separators and screen filters in one body are also available.

6.2.1. Vortex sand separators

Sand separators use the centrifugal force to remove appreciable amounts of sand from the irrigation water. Figure 35 presents a separator and its various components. In summary, the water enters the separator tangentially, giving a spiral motion to the water inside the separator's body. The created centrifugal force will then push the solids to the wall from where they move downwards because of the created vortex, while the water rises up to the outlet. The water impurities are collected in a tank from where they are periodically removed through the use of the drain valve.

Sand separators can remove up to 98% of the sand particles that would be contained in a 200-mesh filter. The head losses between the inlet and the outlet of the separator vary,

Figure 35
Vortex sand separator

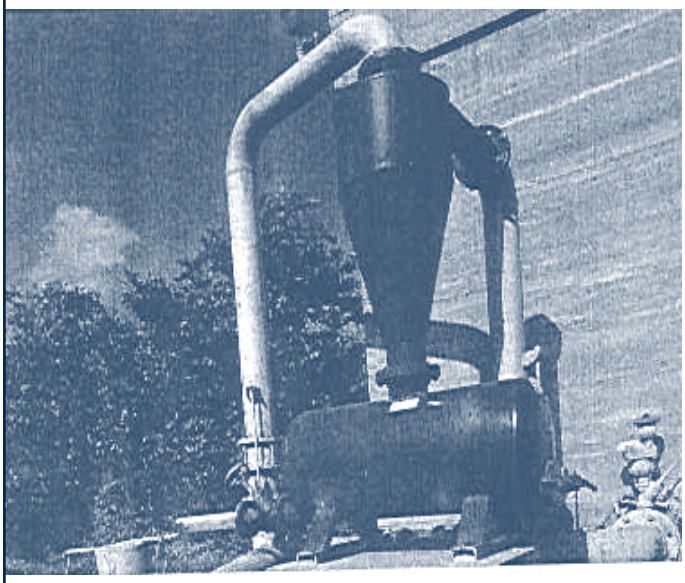

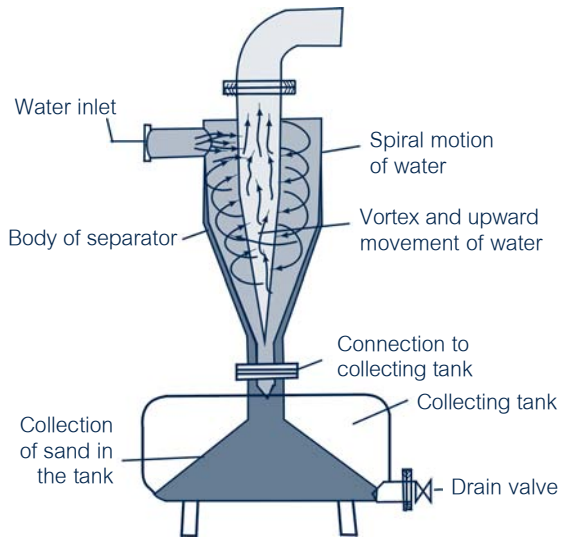

Figure 36
Head losses in vortex sand separators of sizes ¾-6 inches

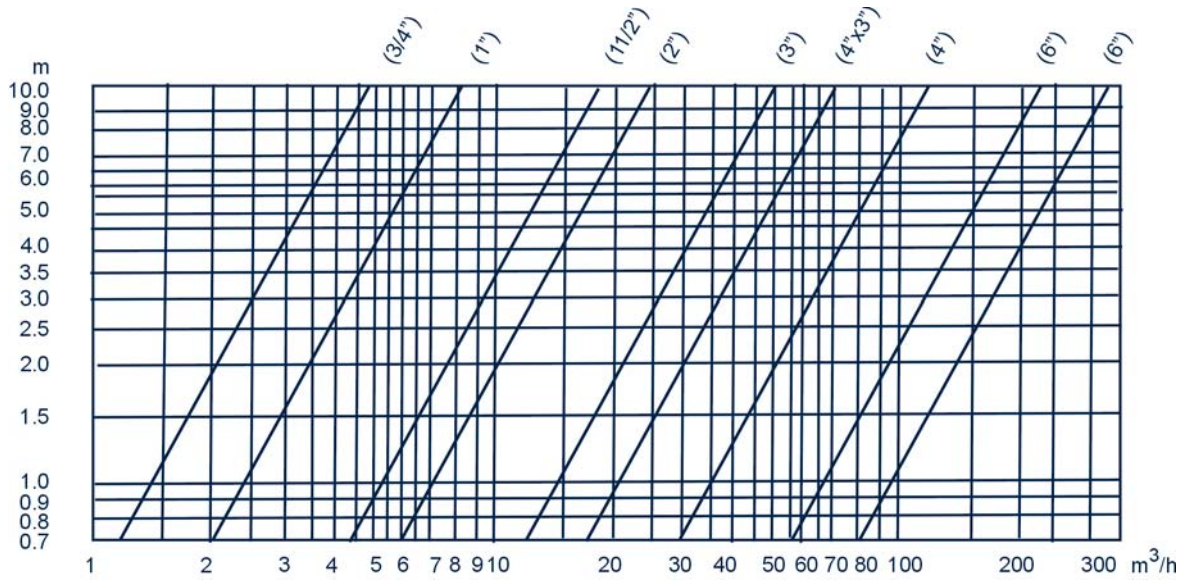

depending on the flow rate and the size of the separator. A pressure differential of 1.5 m is recommended. Figure 36 (obtained from a manufacturer) shows the head losses of this equipment under different flow rates and sizes of equipment.

6.2.2. Screen mesh filter

ISO 9912-2:1992 covers this type of filter and refers to them as strainer-type filters while ISO 9912-3:1992 covers the automatic self-cleaning strainer-type filters. However, these standards do not cover filtration ability and capacity, which is under study. A number of definitions are provided by these standards, the most important of which are given below:

- *Strainer-type filter or strainer*: Appliances containing one or more filtering elements, used for separating suspended solids from the water flowing through the appliance by collecting them on the face of the filter element
- *Filter element*: Strainer internal component, consisting of a perforated plate, screen, mesh, discs or combination of these, intended to retain solid contaminants
- *Drain valve or flush valve*: Valve normally installed in the bottom of the strainer and intended for draining or flushing the strainer housing
- *Nominal pressure*: Maximum static water pressure immediately upstream of the strainer inlet at which the strainer is required to operate
- *Clean pressure drop*: Pressure drop in a clean strainer measured with a flow of clean water under normal conditions
- *Safe maximum pressure drop*: Maximum allowable difference between inlet and outlet pressures across the strainer when the filter element has become clogged to the extent of requiring cleaning or replacement
- *Critical pressure drop before failure*: Maximum allowable pressure difference across each filtering element of the strainer that will not cause failure of the filter element
- *Range of recommended flow-rates*: Range of flow-rates declared by the manufacturer for proper operation of the strainer supplied
- *Nominal size*: Conventional numerical designation to indicate the size of the strainer
- *Aperture size*: Dimension, expressed in microns, of the aperture in the filter element, such as the diameter of a round opening or the side of a square opening

ISO 9912-2:1992, in addition to other requirements and sampling procedures, specifies the following tests for compliance to the standard:

- Resistance of strainer to internal hydrostatic pressure
- Resistance of strainer to internal hydrostatic pressure at high temperature
- Resistance of filter element to buckling or tearing

- Tightness of filter element
- Clean pressure drop

The same standard requires that the manufacturer provides the following information:

- Name and address of manufacturer or supplier
- Model and catalogue number of strainer
- Nominal size of strainer
- Nominal pressure of strainer
- Critical pressure drop before failure for each type of filter element
- Range of recommended flow rates
- Dimensions of strainer
- Type of connection to pipe network
- Strainer length
- Aperture size
- Curve of clean pressure drop in the range of recommended flow rates plus 20% beyond each end of the range
- Safe maximum pressure drop
- Closing instructions
- Instructions for assembly, operation, cleaning and maintenance, including limitations and prohibitions
- List of spares
- Resistance to chemicals commonly used in agriculture

Figure 37 presents the filtration process through a screen filter. The water passes through two screen filter elements (exterior and interior screens).

Another interesting development is the development of semi-automatic screen filters. A brushing assembly fitted inside the screen allows the brushing away of particles from the screen surface and removes them from the filter through the drain valve. Brushing takes place without having to interrupt the filtering process. A handle outside the filter is used to move the brush located inside the filter element. Figure 38 shows the inside of this filter together with the installation drawings.

6.2.3. Disc filters

Disc filters use stacks of grooved plastic discs tightly packed together. A hole in the middle of each disc permits the packing of the discs along a shaft. They look like old gramophone discs, placed one on top of the other, except that the hole in the middle is much larger. During operation water passes between the discs, depositing impurities on the wall and in the grooves of the discs.

Disc filters come in different sizes, from ¾-4 inch. They can be used for primary or final filtration purposes. Discs are available with apertures of filtration capability of 25-800 microns or from 600-18 mesh equivalents. They are available for manual cleaning as well as for automated back-flushing. Figure 39, obtained from a manufacturer, explains the filtration and back-flushing of an automated disc filter.

It appears that ISO 9912-2:1992 also covers this type of filters. Under 3.2 of this standard, the definition of filter element (see Section 6.2.2) also includes discs.

Figure 37
Filtration process through a screen filter (strainer-type filter)

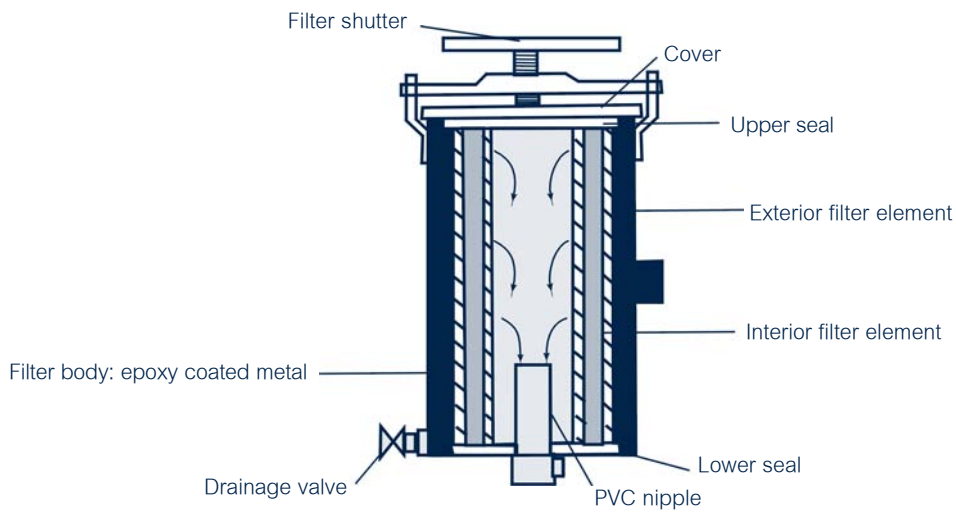

Figure 38
Semi-automatic screen filter

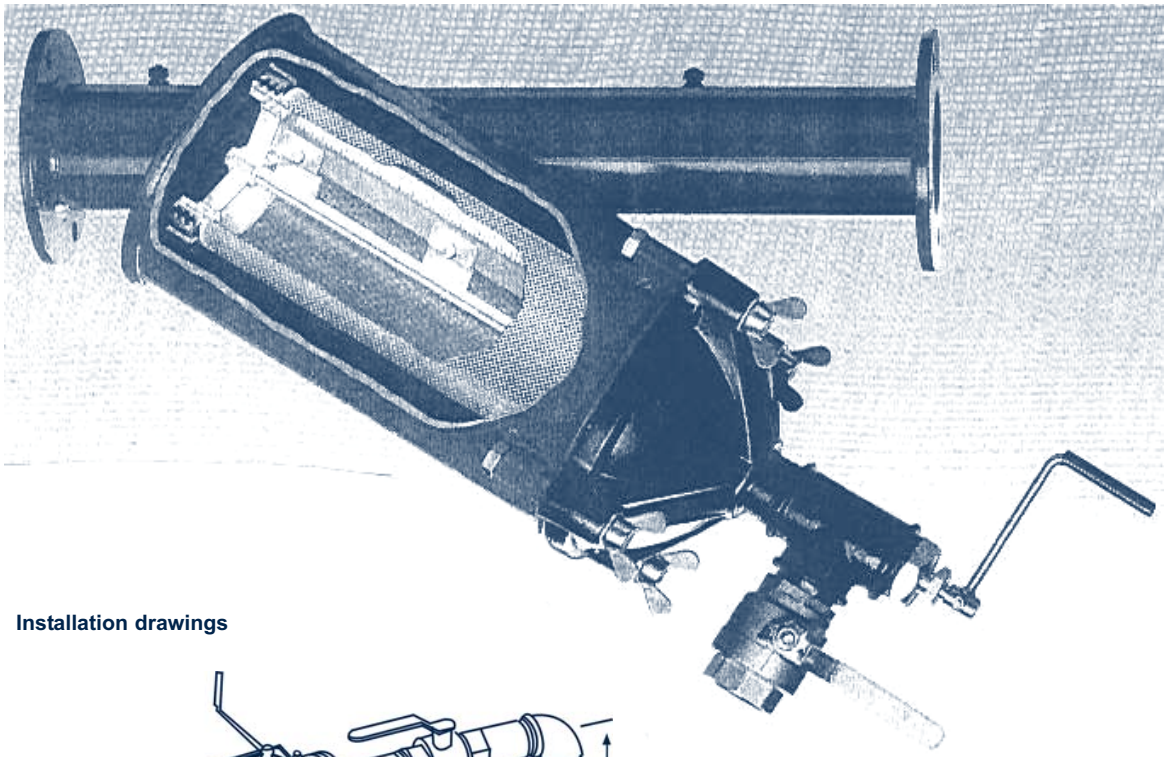

Installation drawings

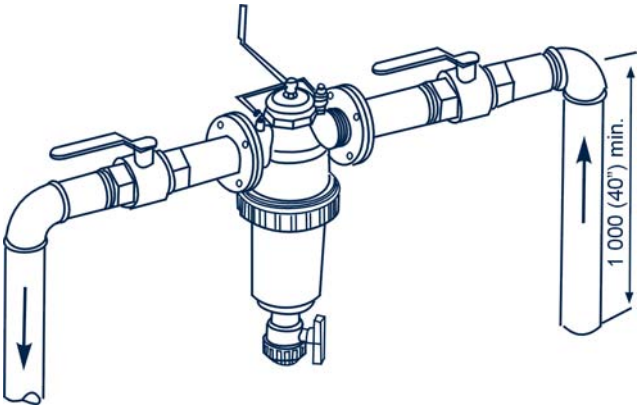

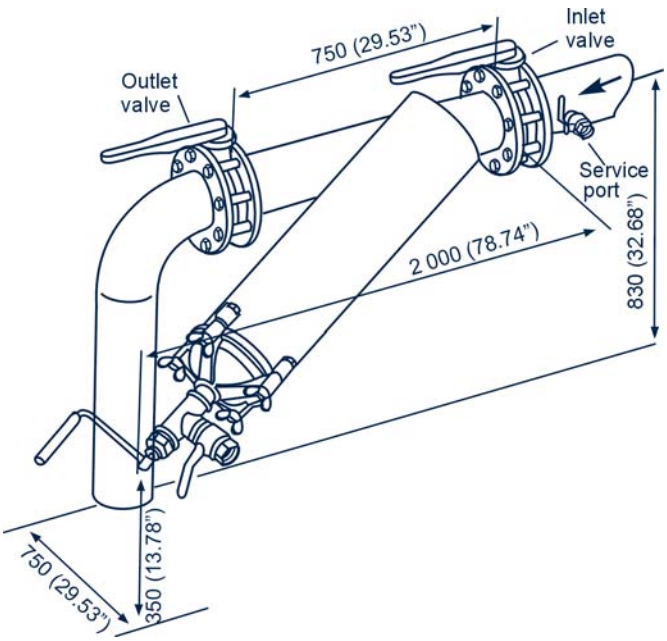

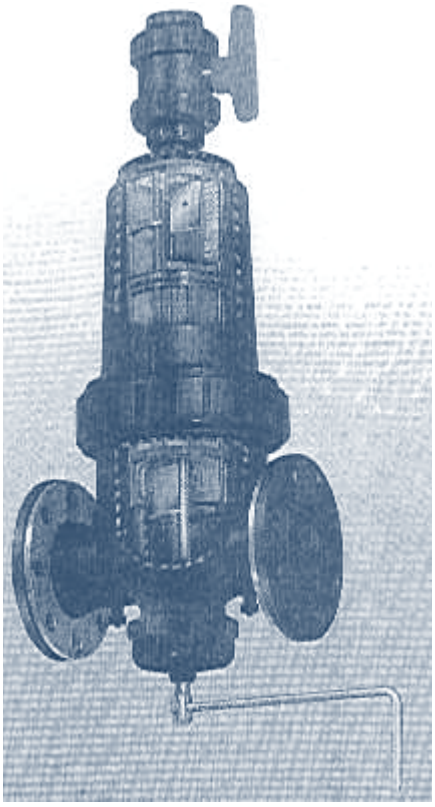

Figure 39
Filtration and back-flushing of an automated disc filter

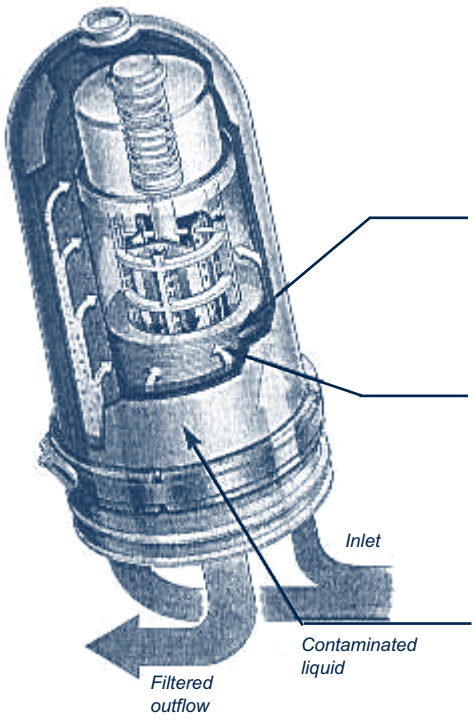

Filtration process

Contaminated liquid from the supply source enters the filter element.

The hydraulic and spring-loaded forces on the grooved disks create a strong, burst-proof filter element. The contact between the grooves of the discs forms a net on which solids are retained. The compression force on the disks is approximately 60 kg per kg/cm^2 of working pressure (9.5 lbs per psi).

Solids and algae are retained on the groove plastic disks. The structure of the disks provided uniform in-depth, multi-intersecting paths.

The contaminated liquid percolates through the compressed discs and the solids are retained in the grooves.

Pressure on the flexible sleeve allows clean liquid to flow easily into the down stream.

Outflow of filtered liquid for use or consumption.

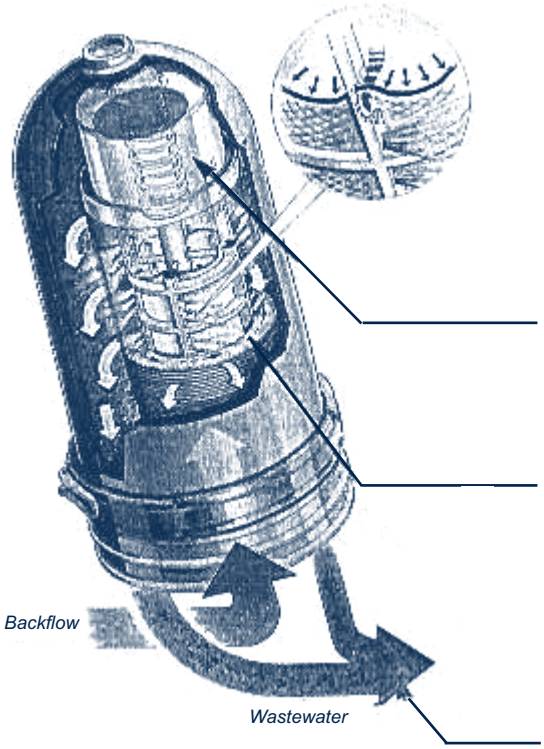

Back-flushing process

A pulse is transmitted by a controller to the back-flushing valve, causing backflow of filtered liquid (or inflow of clean liquid from another source). The direction of back-flushing is opposite to that of regular filtration flow. After a short delay, a drain valve opens to create a high pressure differential in the back-flushing direction.

The withdrawal of the tightening cylinder relieves the pressure from the disks and they are loose and free to spin. Spinning is caused by the inflating sleeve which feeds the spray nozzles through which tangential jets are emitted.

The jets cause the disks to spin at high speed. The back-flushing flow rate is limited by the structure of the nozzles and the sleeve, resulting in low water consumption.

The retained solid particles are washed outward. Note that only rotational and drag forces participate in this process.

Contaminated liquid flows out to waste or to recycling basin.

6.2.4. Media filters

Media filters are suitable for the removal of heavy loads of very fine sand and organic impurities. During filtration the unclean water percolates through layers of media (sand, gravel, etc.) and the particles adhere to the media. They are often used for primary filtration of water from rivers, dams and open canals. Media filters consist of individual vessels combined together in batteries in sufficient numbers to accommodate the flow rate requirements of the system. As a rule, clean (filtered) water from one vessel is used to back-flush and remove impurities from another vessel. Media filter systems can be automated in such a way that back-flushing is activated when the pressure differential between the inlet and the outlet of the filter reaches a certain level. Timers are used also for the same purpose. Figure 40 shows a media filter in filtration mode and in the back-flushing mode.

ANSI/ASAE S539 DEC01 refers to the testing and performance reporting of media filters for irrigation. This standard addresses the operation and performance of media filter tank vessels, related valves, backwash mechanism, drain valves and manifolds. It provides a number of definitions on backwash and backwash mechanisms, on backwash pressure differential, backwash flow, duration of filter flushing cycle, loading rate, maximum operating pressure, maximum operating flow, minimum operating pressure, minimum operating flow, nominal pressure loss and others.

The same standard specifies a number of tests related to the establishment of:

- Pressure loss – flow relationship
- Backwash effectiveness
- Safe operation under extreme conditions

One of the most important tests is related to the establishment of the removal efficiency of the media filter. The test is run under three different levels of inorganic concentrations in the water:

- 0 mg/l (clean tap water)
- 100 mg/l (± 10 mg/l) plus organic materials
- 300 mg/l (± 10 mg/l) plus organic materials

Water from the inlet and outlet of the filter is then analyzed and the removal efficiency calculated for each of the loading rates, using the following equation:

Equation 3

$$E_r = 100 \times \left[1 - \frac{S_{outflow}}{S_{inflow}}\right]$$

Where:

E_r = Removal efficiency (%)

$S_{outflow}$ = Outlet concentration of suspended solids (mg/l)

S_{inflow} = Inlet concentration of suspended solids (mg/l)

Example 3

The concentration of total suspended solids at the inlet of the filter is 110 mg/l. The concentration at the outlet is 30 mg/l. What is the removal efficiency of the filter?

$$E_r = 100 \times \left[1 - \frac{30}{100}\right] = 72.7\%$$

Figure 40
Media filter in filtration and back-flush mode

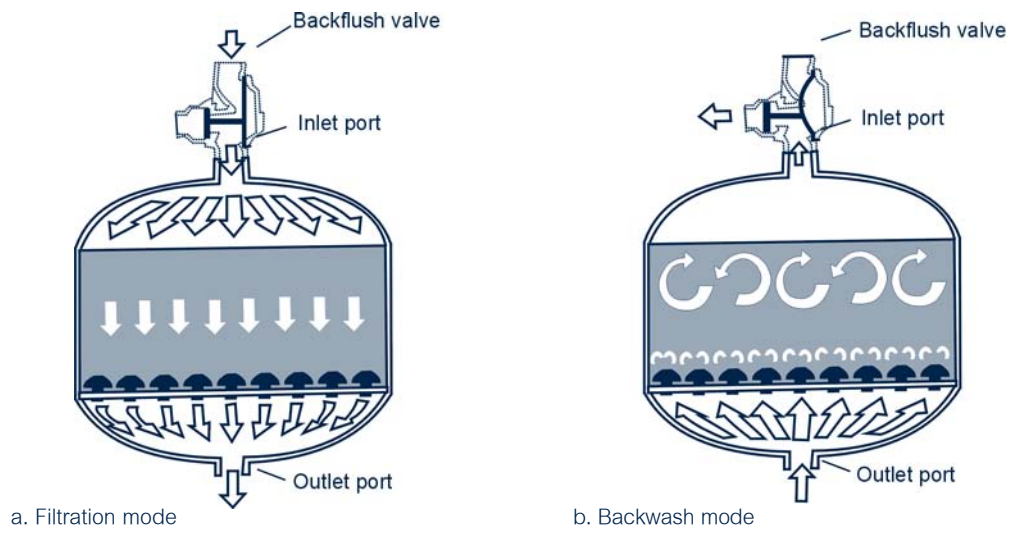

a. Filtration mode

b. Backwash mode

ANSI/ASAE S539 DEC01 provides a detailed list of data to be published by the manufacturer among which the following feature prominently:

- Maximum pressure rating of the tank and manifold, including the design safety factor
- Type of filtering media (sand, silica, gravel, synthetic material, etc.)
- Manufacturer's recommended media bed depth and nominal cross section area of filtration media in the tank
- Manufacturer's recommended media replacement intervals and/or criteria to be used to determine media replacement needs
- Manufacturer's recommended minimum and maximum system flow
- Manufacturer's recommended minimum and maximum operating pressure
- Manufacturer's recommended minimum and maximum flow velocities
- Manufacturer's recommended allowable pressure drop across the media filtration system at above maximum recommended flow for clean media
- Manufacturer's recommended allowable pressure drop across the media filtration system at above minimum recommended flow for clean media
- Removal efficiency for the selected loading rates
- Backwashing performance, according to the manufacturer's operational recommendations
- Ratio of backwash volume to total filtered volume at selected loading rates
- Volume of backwash water required at selected loading rates
- Maximum and minimum backwash flow rates and velocities through the specified media
- Backwash duration
- Recommended backwash frequency
- Maximum allowable pressure difference across the media filter system to initiate backwash
- Backwash valve pressure losses and characteristics of backwash valve operation
- Maximum allowable pressure differentials for automatic back washing when using system water to backwash adjacent tanks
- Safe operation under extreme conditions
- Estimated lifetime (years) and resistance of tanks, fittings, valves, etc. to abrasion and corrosion under adverse water conditions

6.3. Chemical injection equipment

One of the major advantages of pressurized irrigation systems is the potential for the application of chemicals, mostly water-soluble fertilizers, through the irrigation water. Numerous equipment has been developed for this purpose, including the diluter (fertilizer tank), the bladder tank, the Venturi-type injector and water-driven injector pump.

The first displacement diluters were developed in the late 1950s and were used with greenhouse localized irrigation systems. The same equipment was later on introduced in outdoor drip systems. The major disadvantage of this technology was that it could not provide a constant concentration of fertilizer to the system. This led to the development of the bladder tank. Here, the specific concentration of the fertilizer is placed in the bladder. Irrigation water then enters between the walls of the tank and the walls of the bladder using the principle of pressure differential between inlet (water) and outlet (chemical). Figure 41 shows how the bladder-type tank is connected to the system.

While these tanks are still in use, new technologies have been introduced over the last 15 years, including the Venturi-type injector and the water-driven injector pump, aiming at an even distribution of fertilizers through the irrigation system to the entire cropped area.

6.3.1. Venturi-type injectors

This type of injector creates a vacuum for suction of the fertilizer solution from a container (bucket, open reservoir, etc.) into the irrigation water. For the operation of the Venturi a pressure differential between the inlet of the irrigation water and the outlet of the water containing the fertilizer is required. The pressure differential varies with the size of the injector and the suction flow. For example, a small injector would require 10.5 m pressure differential for a suction flow of 120 l/hr. The same injector would require 5.6 m for a suction flow of 33 l/hr. It is therefore important that the pressure requirements of the injector are taken into consideration during the design process. Figure 42 presents various models of Venturi injectors, demonstrates how they operate and shows arrangements for their installation.

Figure 41
Connection of bladder-type tank to the system

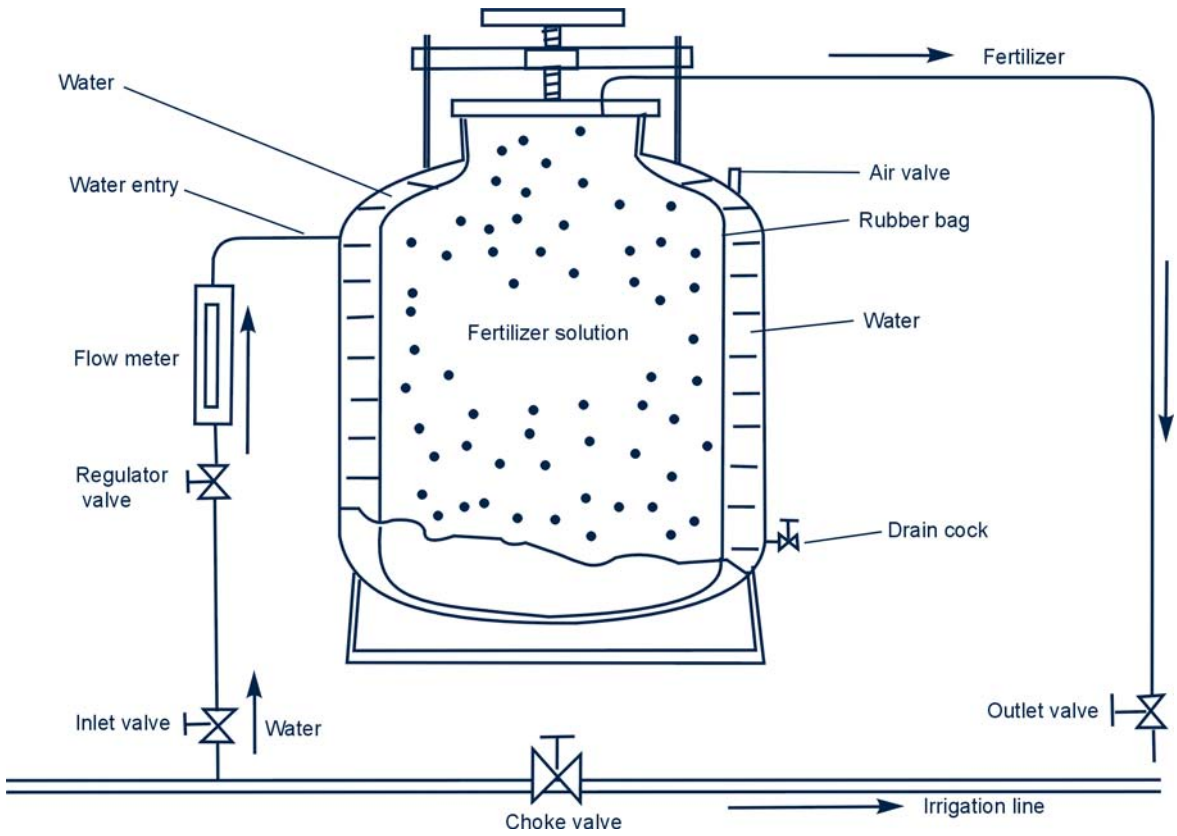

6.3.2. Water-driven chemical injector pumps

Two types of water-driven injector pumps are available in the markets in East and Southern Africa. One is a piston-driven pump and the other is a diaphragm-type pump. Both types come in different models to accommodate different injection rates. Figure 43 shows the two types of water-driven injectors.

According to the manufacturer's catalogue, the minimum pressure requirement of the diaphragm pumps is 2 bar and the maximum ranges between 7-8 bar, depending on the model. The injection rate is affected by the operating pressure of the pump. For smaller models the injection rate is 8-50 l/hr for the range of 2-8 bar pressure. The water consumption of this type of pump is twice the volume of the chemical injected.

The piston-driven pump (proportional injector) has a lower operating pressure range with some models working in the range of 0.15-8 bar, according to the manufacturer's catalogue. The minimum operating flow rate for a small model is 10 l/hr and the maximum 2 500 l/hr. The injection rate for the same model is 0.02-40 l/hr and the average pressure loss at maximum flow rate is 0.9 bar. The average pressure loss at maximum flow rates for the larger models is 0.5 bar. All models have a maximum suction height of 4 m.

ISO13457:2000 specifies construction and operational requirements for water-driven chemical injector pumps. It provides a number of definitions, classifies the injectors, specifies several tests and provides a list of information to be supplied by the manufacturer.

Definitions

- *Water-driven injector pump*: A hydraulic pump intended to inject chemicals into an irrigation system, operated exclusively by the energy of irrigation water driving a hydraulic device such as a piston or turbine
- *Minimum working pressure (P_{min})*: Lowest pressure declared by the manufacturer at the inlet of a water-driven injector pump at which the water-driven injector pump functions properly
- *Maximum working pressure (P_{max})*: Highest pressure declared by the manufacturer at the inlet of a water-driven injector pump at which the water-driven injector pump functions properly

Figure 42
Venturi-type chemical injectors

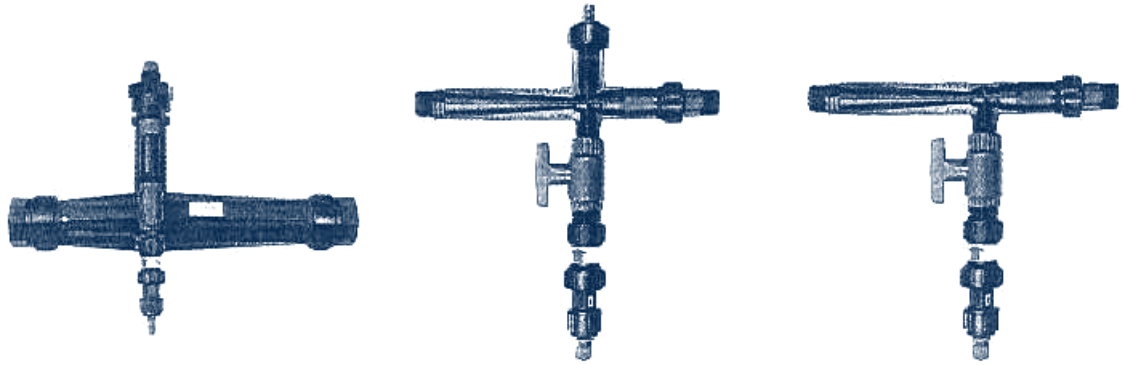

a. Various models

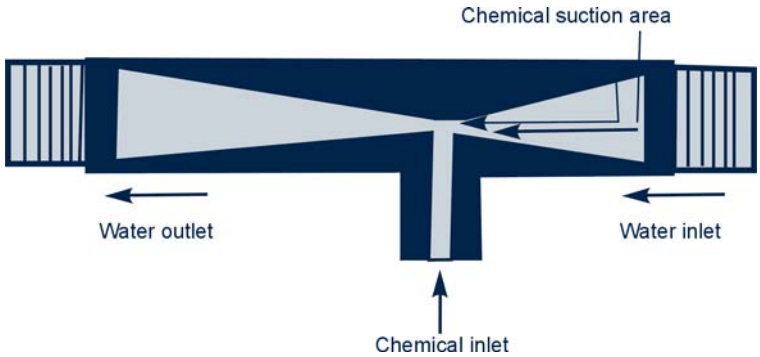

b. Venturi cross-section

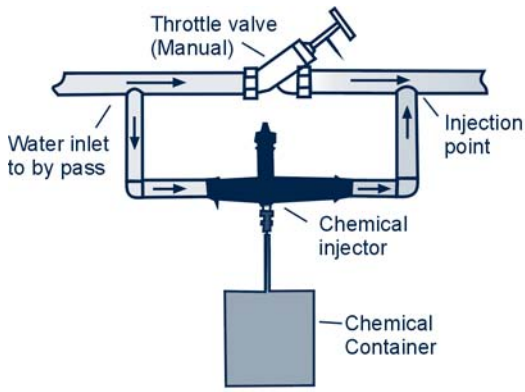

Installation of injector as a bypass to a throttle manual valve

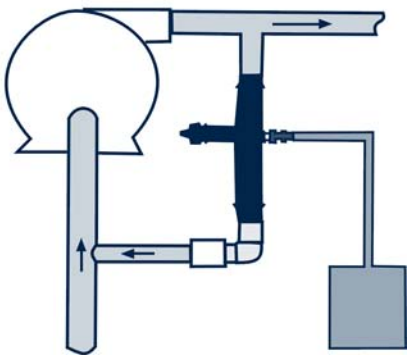

Installation of injector as a bypass to an existing water pump

c. Installation arrangements

Figure 43
Water-driven chemical injector pumps

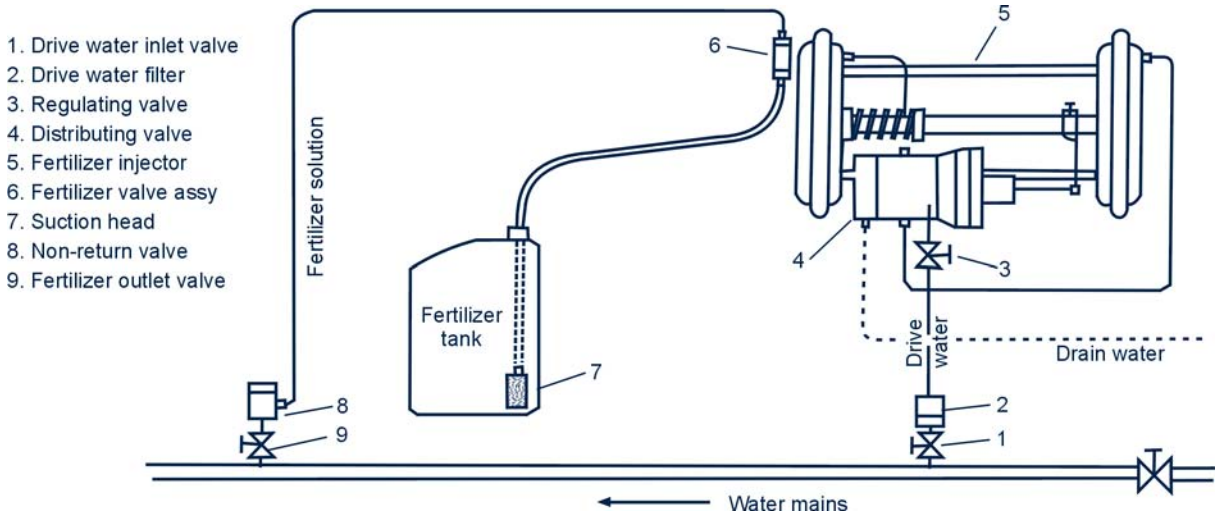

a. Diaphragm-type pump

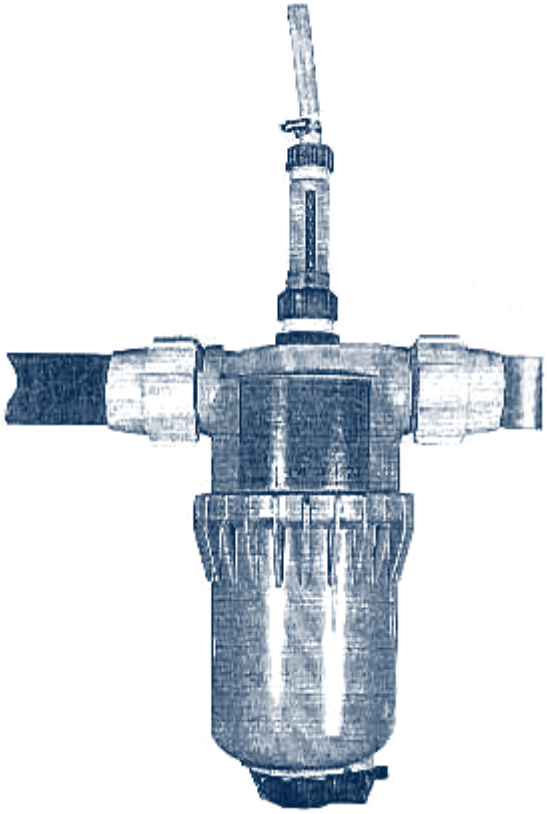

b. Piston-driven injector pump

- *Range of working pressure*: Pressure range between the minimum working pressure P_{min} and the maximum working pressure P_{max}
- *Drive water*: Irrigation water used to operate an on-line water-driven injector pump
- *Drive water ratio*: Ratio of one unit volume of injected chemicals to the volume of drive water required to inject the same unit volume of chemical solution
- *Irrigation water flow rate*: Rate of flow of irrigation water through irrigation pipeline, which is serviced by the water-driven injector pump
- *Injection rate or pumping rate*: Rate of flow of chemical solution injected into an irrigation system during operation of water-driven injector pump
- *Irrigation system water flow rate*: Sum of irrigation water flow rate and the injection rate
- *Mixing ratio*: Ratio of the injection rate to the irrigation system water flow rate
- *Proportional water drive injector pump*: Water-driven injector pump intended to maintain a relatively constant mixing ratio throughout the period of its operation at the irrigation water flow rates declared by the manufacturer
- *In-line water-driven injector pump*: Water-driven injector pump installed in the main irrigation system piping or in bypass piping and featuring three ports including:
  - One inlet for chemicals
  - One inlet for irrigation water
  - One outlet for irrigation water with chemicals

  Figure 44 shows the in-line water-driven injector pump.
- *On-line water-driven injector pump*: Water-driven injector pump installed off the main system piping and featuring four ports:
  - One inlet for chemicals
  - One outlet for chemicals
  - One inlet for drive water
  - One outlet for drive water

  Figure 45 shows the on-line water-driven injector pump.

Figure 44
In-line water-driven injector pump

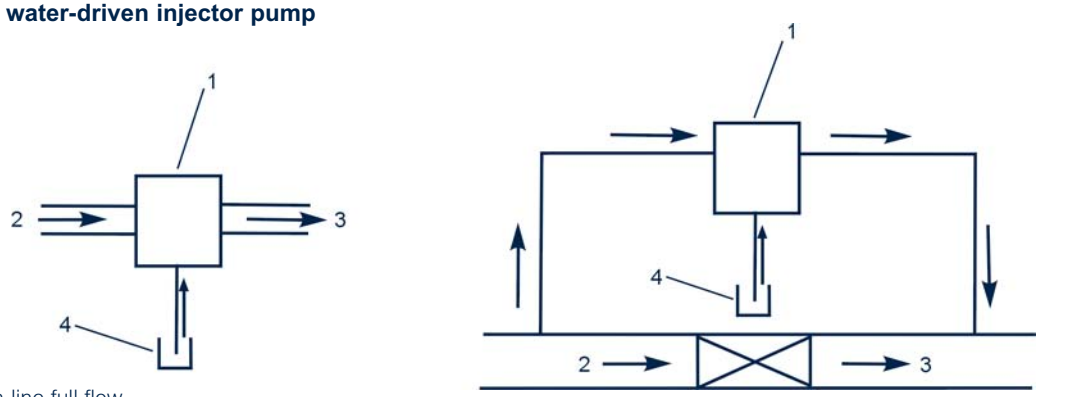

1 = Injector pump
2 = Irrigation flow
3 = Irrigation water with injected chemicals
4 = Chemicals

Figure 45
On-line water-driven injector pump

1 = Injector pump
2 = Drive water
3 = Chemicals
4 = Irrigation flow
5 = Irrigation water with injected chemicals

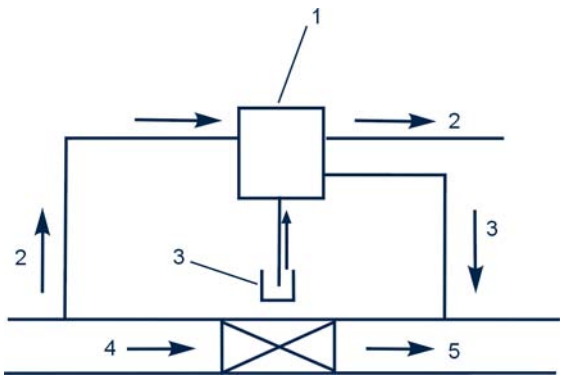

Referring to the two injectors mentioned earlier, the piston pump is an in-line injector and the diaphragm pump is an on-line injector. Based on the mixing ratio, injectors are further classified by the same standard as proportional and non-proportional.

ISO13457: 2000 specifies the following tests:

- Resistance to the pressure
- Water tightness of check valves
- Range of working pressure
- Resistance to draining
- Injection rate
- Drive water ratio
- Injection rate for proportional water-driven injector pumps
- Head loss for in-line water-driven injector pumps
- Durability

The same standard requires that the manufacturers provide the following general information and operating instructions:

- General information:
  - Catalogue number, type and size of connection, general dimensions, operating principle, list of spares and drawings
  - Type and size of flow regulator, if it is an integral part of the injector
  - Head losses
  - How much drive water is discharged (for on-line water-driven injector pump)
- Operating instructions:
  - Installation instructions
  - Calibration instructions
  - Maintenance and storage instructions
  - Precision of the injection rate as a function of pressure at the inlet of the water-driven injector pump
  - Instructions for filtration of the chemicals and of the irrigation water
  - Stroke volume of adjustable mixing ratio piston-type proportional water-driven injector pumps
  - Drive water ratio
  - Maximum suction head
  - Range of mixing ratios and method of setting mixing ratio (manual, hydraulic or electronic)
  - Data on electric output, flow volume and timing and relevant graphical description and tables for operating data
  - Influence on pump operation of head loss in drive water ejection pipe, if applicable
  - Range of irrigation water flow rates
  - Injection rate

References

ANSI/ASAE S553 MAR01. *Collapsible emitting hose (drip tape) – specification and performance testing.*

ANSI/ASAE S436.1 DEC01. *Test procedure for determining the uniformity of water distribution of centre pivot and lateral move irrigation machines equipped with spray or sprinkler nozzles.*

ANSI/ASAE S539 DEC01. *Media filters for irrigation – testing and performance reporting.*

ASAE S398.1 JAN01. *Procedure for sprinkler testing performance.*

ASAE S263.2. *Minimum standards for aluminium irrigation tubing.*

BS 5154:1991. *Specification for copper alloy globe, glob stop and check, check and gate valves.*

BSI 729. *Hot dip galvanized coating on iron and steel articles.*

BSI 755. *Aluminium and aluminium alloys.*

FAO. 2001. *Handbook on pressurized irrigation techniques*. Prepared by: A. Phocaides. Rome. Italy.

ISO 160:1980. *Asbestos cement pressure pipes and joints.*

ISO 5996:1984. *Cast iron gate valves.*

ISO 7508:1985. *Unplasticized polyvinyl chloride (PVC-U) valves for pipes under pressure – basic dimensions – metric series.*

ISO 9635:1990. *Irrigation equipment – hydraulically operated irrigation valves.*

ISO 4641:1991. *Rubber hoses for water suction and discharge – specification.*

ISO 8224-2:1991. *Traveller irrigation machines – Part 2: softwall hose and couplings – test methods.*

ISO 9260:1991. *Agricultural irrigation equipment – emitters – specification and test methods.*

ISO 9261:1991. *Agricultural irrigation equipment – emitting-pipe systems – specification and test methods.*

ISO 9912-2:1992. *Agricultural irrigation equipment – filters – Part 2: strainer-type filters.*

ISO 9912-3:1992. *Agricultural irrigation equipment – filters – Part 3: automatic self- cleaning strainer-type filters.*

ISO 4064-1:1993. *Measurements of water flow in closed conduits – meters for cold potable water – Part 1: specifications.*

ISO 9625:1993. *Mechanical joint fittings for use with polyethylene pressure pipes for irrigation purposes.*

ISO 9644:1993. *Agricultural irrigation equipment – pressure losses in irrigation valves – test method.*

ISO 9908:1993. *Technical specifications for centrifugal pumps – class III.*

ISO 9911:1993. *Agricultural irrigation equipment – manually operated small plastic valves.*

ISO 9952:1993. *Agricultural irrigation equipment – check valves.*

ISO 10522:1993. *Agricultural irrigation equipment – direct-acting pressure regulating valves.*

ISO 9905:1994. *Technical specifications for centrifugal pumps – class I.*

ISO 6224:1995. *Plastic hoses, textile-reinforced, for general-purpose water applications - specifications.*

ISO 7749-1:1995. *Agricultural irrigation equipment – rotating sprinklers – Part 1: design and operational requirements.*

ISO 7749-2:1995. *Agricultural irrigation equipment – rotating sprinklers – Part 2: uniformity of distribution and test methods.*

ISO 8026:1995. *Agricultural irrigation equipment – sprayers – general requirements and test methods.*

ISO 12162:1995. *Thermoplastic materials for pipes and fittings for pressure applications – classification and designation – overall service (design) coefficient.*

ISO 11678:1996. *Agricultural irrigation equipment – aluminium irrigation tubes.*

ISO 11419:1997. *Agricultural irrigation equipment – float-type air release valves.*

ISO 4064-3:1999. *Measurements of water flow in closed conduits – meters for cold potable water – Part 3: test methods and equipment.*

ISO 8796:1999. DIS. *Polyethylene (PE) 32 pipes for irrigation laterals – susceptibility to environmental stress-cracking induced by insert-type fittings – test method and specification.*

ISO 7714:2000. *Agricultural irrigation equipment – volumetric valves – general requirements and test methods.*

ISO 11738:2000. *Agricultural irrigation equipment – control heads.*

ISO 12092:2000. *Fittings, valves and other components made of unplasticized poly (vinyl) chloride (PVC-U), chlorinated poly (vinyl) chloride (PVC-C), acrylonitrile-butadiene-styrene (ABS) and acrylonitrile-styrene-acrylester (ASA) for pipes under pressure – resistance to internal pressure – test method.*

ISO 13457:2000. *Agricultural irrigation equipment – Water-driven chemical injector pumps.*

ISO 4064-2:2001. *Measurements of water flow in closed conduits – meters for cold potable water – Part 2: installation requirements and selection.*

ISO 8779:2001. *Polyethylene (PE) pipes for irrigation laterals – specifications.*

ISO 11545:2001. *Agricultural irrigation equipment – centre-pivot and moving lateral irrigation machines with sprayer or sprinkler nozzles – determination of uniformity of water distribution.*

ISO 5199:2002. *Technical specifications for centrifugal pumps – class II.*

ISO 390. *Products in fibre reinforced cement: sampling inspection.*

ISO 1192. *Thermoplastic pipes for the conveyance of fluids – dimensions and tolerances.*

ISO 2548. *Centrifugal, mixed flow and axial pumps – code for acceptance tests – class C.*

ISO 3555. *Centrifugal, mixed flow and axial pumps – code for acceptance tests – class B.*

ISO 3951. *Sampling procedures and charts for inspection by variables for percent nonconforming.*

ISO 4064-3. *Measurement of water flow in closed conduits – meters for cold potable water – Part 3: test methods and equipment.*

ISO 7268. *Pipe components – definitions of nominal pressure.*

ISO 7337. *Asbestos reinforced cement products: guidelines for on-site work practices.*

ISO 8233. *Thermoplastic valves – torque – test methods.*

ISO 8242. *Polypropylene (PP) valves for pipes under pressure – basic dimensions – metric series.*

SABS 533:Part I:1982. *Black polyethylene pipes for the conveyance of liquids – Part I: low density black polyethylene pressure pipes.*

SABS 533:Part II:1982. *Black polyethylene pipes for the conveyance of liquids – Part II: high density black polyethylene pressure pipes.*

SAZS 102:Part 1 and 2:1993. *Steel pipes.*

SAZS 362:1994. *Aluminium tubes for irrigation purposes.*

SAZS 363:1996. *Irrigation equipment - sprayers and rotating sprinklers.*

SAZS 531:1996. *Polyethylene (PE) pipes for irrigation laterals.*

SAZS 113:2000. *Fibre-cement pressure pipes and joints.*

SAZS 327:2001. *Components of pressure pipe systems: unplasticized poly (vinyl chloride) pressure pipe systems.*

Smith I. 1993. *Pipes in agriculture*. Directorate of Irrigation Engineering, Department of Agriculture, Republic of South Africa.