Irrigation Manual

Planning, Development, Monitoring and Evaluation of Irrigated Agriculture with Farmer Participation

Module 12

Guidelines for the Preparation of Tender Documents

Developed by

Andreas P. SAVVA
and
Karen FRENKEN

Water Resources Development and Management Officers
FAO Sub-Regional Office for East and Southern Africa

In collaboration with
Simon MADYIWA, Irrigation Engineer Consultant
Lee TIRIVAMWE, National Irrigation Engineer, Zimbabwe
Victor MTHAMO, Irrigation Engineer Consultant

Harare, 2002

Food and Agriculture Organization of the United Nations (FAO)
Sub-Regional Office for East and Southern Africa (SAFR)
Harare, 2002

The views expressed in this paper are those of the authors and do not necessarily reflect the views of the Food and Agriculture Organization of the United Nations

The designations employed and the presentation of the material in this publication do not imply the expression of any opinion whatsoever on the part of the Food and Agriculture Organization of the United Nations concerning the legal status of any country, territory, city or area of its authorities, or concerning the delimitation of its frontiers or boundaries

All rights reserved. No part of this publication may be reproduced, stored in a retrieval system, or transmitted in any form or by any means, electronic, mechanical, photocopying or otherwise, without the prior permission of the copyright owner

© FAO SAFR 2002

Design and Layout: Fontline International, Mauritius
Printed by: Préci-ex, Les Pailles, Mauritius

Contents

List of figures vi
List of tables vi
Foreword vii
Acknowledgements ix
Unit conversion table x
List of abbreviations xi

1. PREPARATION OF A TENDER DOCUMENT BY THE CLIENT 1
   1.1. The tender document 1
   1.2. Types of contracts for which a tender document can be prepared 1
      1.2.1. Measurement contract 1
      1.2.2. Fixed fee or lump sum contract 1
      1.2.3. Cost reimbursable contract 1
      1.2.4. All-in-all contract 2
   1.3. Content of a tender document 2
   1.4. Instructions to tenderers 2
   1.5. Conditions of contract 2
      1.5.1. General conditions of contract 2
      1.5.2. Special conditions of contract 5
   1.6. Technical specifications 7
   1.7. Drawings 7
   1.8. Bill of quantities 8

2. SUBMISSION OF A TENDER DOCUMENT BY THE TENDERER 9
   2.1. Letter of submission 9
   2.2. Form of tender 9
   2.3. Certificate of site visit 9
   2.4. Tender guarantee 9
   2.5. Advance payment guarantee 9
   2.6. Performance guarantee 9
   2.7. Bank credit letter and affidavit 9
   2.8. Programme/schedule of works 14
   2.9. List of staff 14
   2.10. List of equipment and machinery 14
   2.11. Performance characteristics of all equipment to be installed in the project 14
   2.12. List of sub-contractors 14
   2.13. Variations to tender 14
   2.14. Company profile 15
   2.15. Sworn statement to client 15

3. AN EXAMPLE OF THE PREPARATION OF A TENDER DOCUMENT FOR THE CONSTRUCTION OF A SURFACE IRRIGATION SCHEME 17
   3.1. Background and access to the scheme 17
   3.2. Contract drawings 17
   3.3. General irrigation scheme layout 17
   3.4. Special conditions 24
      3.4.1. Materials 24
      3.4.2. Procurement, packing and delivery 24
      3.4.3. Storage of materials and equipment on the site 24

3.4.4. Concrete 25
3.4.5. Fencing 25
3.4.6. Progress reports 25
3.4.7. Clearing the site upon completion of works 25
3.5. Technical specifications 26
3.5.1. General 26
3.5.2. Earthworks 26
3.5.3. Concrete works 27
3.5.4. Land clearing and land preparation 28
3.6. Bill of quantities 29

4. AN EXAMPLE OF THE PREPARATION OF A TENDER DOCUMENT FOR THE CONSTRUCTION OF A DRAG-HOSE SPRINKLER IRRIGATION SCHEME FOR SMALLHOLDERS 31
4.1. Background and access to the scheme 31
4.2. Contract drawings 31
4.3. General irrigation scheme layout 31
4.4. Special conditions 36
4.4.1. Materials 36
4.4.2. Procurement, packing and delivery 36
4.4.3. Storage of materials and equipment on the site 36
4.4.4. Working drawings and As built or Record drawings 36
4.4.5. Trenching and back-filling 37
4.4.6. Pipe laying 37
4.4.7. Keeping pipelines clean 38
4.4.8. Flushing 38
4.4.9. Pressure testing 38
4.4.10. Timing/Scheduling of works 38
4.4.11. Workmanship 38
4.4.12. Variation order 38
4.4.13. Progress reports 38
4.4.14. Clearing the site upon completion of works 39
4.5. Technical specifications 39
4.5.1. General 39
4.5.2. Materials and equipment 39
4.5.3. Sprinklers 40
4.5.4. Gate valves 40
4.5.5. Spares and tools 40
4.5.6. Pressure gauges 40
4.5.7. Valve chambers 40
4.5.8. Valve keys 40
4.5.9. Pumping station 40
4.5.10. Concrete works 41
4.5.11. Nurseries 41
4.6. Bill of quantities 41

5. AN EXAMPLE OF THE PREPARATION OF A TENDER DOCUMENT FOR THE CONSTRUCTION OF A DRIP IRRIGATION SCHEME FOR SMALLHOLDERS 45
5.1. Background and access to the scheme 45
5.2. Contract drawings 45
5.3. General irrigation scheme layout 45
5.4. Special conditions 45
5.4.1. Protection of existing services and structures 45
5.4.2. Sign board 48

5.4.3. First aid outfit 48
5.4.4. Materials 48
5.4.5. Procurement, packing and delivery 48
5.4.6. Storage of materials and equipment on site 48
5.4.7. Working drawings and As built or Record drawings 49
5.4.8. Trenching and back-filling 49
5.4.9. Pipe laying and connection 49
5.4.10. Keeping pipelines clean 49
5.4.11. Flushing 49
5.4.12. Pressure testing 50
5.4.13. uPVC – dripline connections 50
5.4.14. Timing/Scheduling of works 50
5.4.15. Workmanship 50
5.4.16. Variation order 50
5.4.17. Progress reports 51
5.4.18. Clearing the site upon completion of works 51
5.5. Technical specifications 51
5.5.1. General 51
5.5.2. uPVC pipe work and fittings 51
5.5.3. Aluminum pipes 51
5.5.4. Galvanized Iron pipes 51
5.5.5. Driplines 52
5.5.6. Emitters 52
5.5.7. Gate valves 52
5.5.8. Ball valves 52
5.5.9. Air release valves and vacuum breakers 52
5.5.10. Pressure gauges 52
5.5.11. Pressure regulators 52
5.5.12. Sand filters 52
5.5.13. Disc filters 52
5.5.14. Fertilizer injectors 52
5.5.15. Water meters 52
5.5.16. Pumping station 53
5.6. Bill of quantities 53

REFERENCES 57

List of figures

1. Location map of Nabusenga surface irrigation scheme 18
2. Layout of Nabusenga surface irrigation scheme 19
3. Typical cross-section of a lined canal (NABU/8) 20
4. Diversion structure with sluice gates (NABU/11) 21
5. Saddle bridge (NABU/12) 22
6. Standard drop structure without stilling basin (NABU/15) 23
7. Location map of the Bonde drag-hose sprinkler irrigation scheme (BO/13) 32
8. Layout of Bonde drag-hose sprinkler irrigation scheme (partial) 33
9a. Connection of gate valves, 2 inch or less, to a lateral pipe (BO/15) 34
9b. Drain valve and manhole (BO/16) 34
9c. Brass garden tap connected to a galvanized riser and lateral pipe (BO/17) 34
9d. Sprinkler mounted on steel risers supported by tripods (BO/18) 34
10a. Twin gate valve assembly for CI valves (BO/19) 35
10b. CI gate valves, 3 inch and above, and valve chamber (BO/20) 35
10c. Section through a CI gate valve and chamber (BO/21) 35
10d. Position of gate valves controlling flow into lateral pipelines (BO/22) 35
11. Completed pump house at Bonde irrigation scheme 40
12. Completed pumping unit at Bonde irrigation scheme 40
13. Location map of Hama-Mahvaire drip irrigation scheme 46
14. Layout of Hama-Mahvaire drip irrigation scheme 47

List of tables

1. Example of international standard specifications 7
2. Bill of Quantities for concrete and form works operations for canal lining at Nabusenga 29
3. Bill of Quantities for land clearing and preparation at Nabusenga 29
4. Example of schedule for plant hire charges at Nabusenga 30
5. Bill of Quantities for the Bonde smallholder drag-hose sprinkler irrigation schemes 42
6. Bill of Quantities for the booster pump, filtration and establishment at Hama-Mahvaire 53
7. Bill of Quantities for the mainline at Hama-Mahvaire 53
8. Bill of Quantities for the infield works at Hama-Mahvaire 54
9. Bill of Quantities for the spare parts at Hama-Mahvaire 55

Foreword

The first edition of the Irrigation Manual was published in 1990 in two volumes by the "Smallholder Irrigation" Project (UNDP/FAO/AGRITEX/ZIM/85/004). The authors of this first edition were FAO Staff on the project[1]. This edition of one hundred copies ran out within two years from publishing.

Although the manual was written with Zimbabwe in mind, it soon became popular in several countries of the sub-region. In view of the high demand, it was decided to proceed with a second edition. The experience gained from using the first edition of the manual as the basic reference for the AGRITEX[2] training programme of irrigation practitioners and the University of Zimbabwe, was incorporated in the second edition which was published in 1994, in one volume by the "Technical Assistance to AGRITEX" project (UNDP/FAO/AGRITEX/ZIM/91/005). This second edition was published under the same authors as the first edition, with the assistance of a review committee from AGRITEX[3]. The two hundred copies of this edition also ran out within two years of publishing.

In 1995, the FAO Sub-regional Office for East and Southern Africa (SAFR) was established in Harare, Zimbabwe, in order to provide easy access to technical assistance and know-how for the countries of the sub-region[4]. In view of the high demand for support in the field of smallholder irrigation by the countries of the sub-region, this office was strengthened with four water resources management officers and a number of on-going programmes have been developed to provide this support. One of these programmes is the publishing of a new regional edition of the irrigation manual in support of the on-going national training programmes within several countries in the sub-region and to provide the basic reference for another important programme, which is the sub-regional training on planning and design of smallholder irrigation schemes.

This third edition aspires to further strengthen the engineering, agronomic and economic aspects of the manual and to introduce new modules related to social, health and environmental aspects of irrigation development. The emphasis is directed towards the engineering, agronomic and economic aspects of smallholder irrigation, in view of the limited practical references in this area. This manual, being directed to the irrigation practitioner, does not provide an in-depth analysis of the social, health and environmental aspects in irrigation development. It only attempts to introduce the irrigation practitioner to these areas, providing a bridge between the various disciplines involved in irrigation development.

The initiatives and efforts of the Water Resources Management Team of SAFR in publishing this Manual are considered as a valuable contribution to the dissemination of knowledge and training of irrigation practitioners in the sub-region. The material covered by this manual is expected to support both national and sub-regional training programmes in the planning, design, construction, operation and maintenance and on-farm water management of irrigation schemes. This will support the implementation of FAO's mandate to increase food production through water control, intensification and diversification, which are the basic components of the Special Programme for Food Security (SPFS).

The manual is the result of several years of field work and training irrigation engineers in the sub-region. The approaches have been field tested and withstood the test of time.

---

[1] *A.P. Savva, Chief Technical Advisor; J. Stoutjesdijk, Irrigation Engineer; P.M.A. Regnier, Irrigation Engineer; S.V. Hindkjaer, Economist.*

[2] *Agritex: Department of Agricultural Technical and Extension Services, Ministry of Lands and Agriculture, Zimbabwe.*

[3] *Review committee: E. Chidenga, Acting Chief Irrigation Officer; P. Chipadza, Senior Irrigation Specialist; A. Dube, Senior Irrigation Specialist; L. Forichi, Irrigation Specialist; L. Madhiri, Acting Principal Irrigation Officer; S. Madyiwa, Irrigation Specialist; P. Malusalila, Chief Crop Production; R. Mariga, Assistant Secretary, Economic and Markets Branch; D. Tawonezvi, Agricultural Economist.*

[4] *The following 21 countries are part of the FAO-SAFR region: Angola, Botswana, Burundi, Comoros, Eritrea, Ethiopia, Kenya, Lesotho, Madagascar, Malawi, Mauritius, Mozambique, Namibia, Rwanda, Seychelles, South Africa, Swaziland, Tanzania, Uganda, Zambia, Zimbabwe.*

For ease of reference to the various topics covered by this Manual, the material has been divided into 14 modules, covering the following:

Module 1:	Irrigation development: a multifaceted process
Module 2:	Natural resources assessment
Module 3:	Agronomic aspects of irrigated crop production
Module 4:	Crop water requirements and irrigation scheduling
Module 5:	Irrigation pumping plant
Module 6:	Guidelines for the preparation of technical drawings
Module 7:	Surface irrigation systems: planning, design, operation and maintenance
Module 8:	Sprinkler irrigation systems: planning, design, operation and maintenance
Module 9:	Localized irrigation systems: planning, design, operation and maintenance
Module 10:	Irrigation equipment for pressurized systems
Module 11:	Financial and economic appraisal of irrigation projects
Module 12:	Guidelines for the preparation of tender documents
Module 13:	Construction of irrigation schemes
Module 14:	Monitoring the technical and financial performance of an irrigation scheme

To those who have been waiting for so long for a practical irrigation engineering manual: here it is. I am sure that it will have a lot to offer to both the new and experienced irrigation engineers.

Victoria Sekitoleko
FAO Sub-Regional Representative
for East and Southern Africa

Acknowledgements

The preparation of the third edition of the Irrigation Manual is an initiative of FAO's Sub-Regional Office for East and Southern Africa (SAFR).

The whole project was managed and coordinated by Andreas P. Savva and Karen Frenken, Water Resources Development and Management Officers at FAO-SAFR, who are the main authors. Karen Frenken also is the main technical editor.

The following persons provided valuable inputs into this Volume V: Tove Lilja (Module 11 and 14), Simon Madyiwa (Module 12 and 14), Susan Minae (Module 11 and 14), Victor Mthamo (Module 13), Kennedy Mudima (Module 13), Personal Sithole (Module 11 and 14) and Lee Tirivamwe (Module 12, 13 and 14).

The preparation of several drawings by Solomon Maina is acknowledged.

Special appreciation is extended to Chris Pappas for his substantial contribution to the layout of the Irrigation Manual.

Unit conversion table

Length

1 inch (in)	0.0254 m
1 foot (ft)	0.3048 m
1 yard (yd)	0.9144 m
1 mile	1609.344 m
1 metre (m)	39.37 inches (in)
1 metre (m)	3.28 feet (ft)
1 metre (m)	1.094 yards (yd)
1 kilometre (km)	0.62 miles

Area

1 square inch (in^2)	6.4516×10^{-2} m^2
1 square foot (ft^2)	0.0929 m^2
1 square yard (yd^2)	0.8361 m^2
1 acre	4046.86 m^2
1 acre	0.4046 ha
1 square centimetre (cm^2)	0.155 square inches (in^2)
1 square metre (m^2)	10.76 square feet (ft^2)
1 square metre (m^2)	1.196 square yard (yd^2)
1 square metre (m^2)	0.00024 acres
1 hectare (ha)	2.47 acres

Volume

1 cubic inch (in^3)	1.6387×10^{-5} m^3
1 cubic foot (ft^3)	0.0283 m^3
1 cubic yard (yd^3)	0.7646 m^3
1 cubic centimetre (cm^3)	0.061 cubic inches (in^3)
1 cubic metre (m^3)	35.315 cubic feet (ft^3)
1 cubic metre (m^3)	1.308 cubic yards (yd^3)

Capacity

1. imperial gallon	0.0045 m^3
1. US gallon	0.0037 m^3
1. imperial barrel	0.1639 m^3
1. US. barrel	0.1190 m^3
1 pint	0.5681 l
1 US gallon (dry)	0.0044 m^3
1 litre (l)	0.22 imp. gallon
1 litre (l)	0.264 U.S. gallon
1 litre (l)	0.0061 imperial barrel
1 hectolitre (hl)	100 litres = 0.61 imperial barrel = 0.84 US barrel
1 litre (l)	1.760 pints
1 cubic metre of water (m^3)	1000 l = 227 U.S. gallon (dry)
1 imperial barrel	164 litres

Mass

1 ounce	28.3286 g
1 pound	0.4535 kg
1 long ton	1016.05 kg
1 short ton	907.185 kg
1 gram (g)	0.0353 ounces (oz)
1 kilogram (kg)	1000 g = 2.20462 pounds
1 ton	1000 kg = 0.984 long ton = 1.102 short ton

Pressure

1 pound force/in^2	6894.76 N/m^2
1 pound force/in^2	51.7 mm Hg
1 Pascal (PA)	1 N/m^2 = 0.000145 pound force /in^2
1 atmosphere	760 mm Hg = 14.7 pound force/in^2 (lbf/in^2)
1 atmosphere	1 bar
1 bar	10 metres
1 bar	100 kpa

Energy

1 B.t.u.	1055.966 J
1 foot pound-force	1.3559 J
1 B.t.u.	0.25188 Kcalorie
1 B.t.u.	0.0002930 KWh
1 Joule (J)	0.000947 B.t.u.
1 Joule (J)	0.7375 foot pound-force (ft.lbf)
1 kilocalorie (Kcal)	4185.5 J = 3.97 B.t.u.
1 kilowatte-hour (kWh)	3600000 J = 3412 B.t.u.

Power

1 Joule/sec	0.7376 foot pound/sec
1 foot pound/sec	1.3557 watt
1 cheval-vapor	0.9861 hp
1 Kcal/h	0.001162 kW
1 watt (W)	1 Joule/sec = 0.7376 foot pound/sec (ft lbf/s)
1 horsepower (hp)	745.7 watt 550 ft lbf/s
1 horsepower (hp)	1.014 cheval-vapor (ch)
1 kilowatt (kW)	860 Kcal/h = 1.34 horsepower

Temperature

^{0}C (Celsius or centigrade-degree)	$^0C = 5/9 \times (^0F - 32)$
^{0}F (Fahrenheit degree)	$^0F = 1.8 \times {}^0C + {}^0F$
K (Kelvin)	$K = {}^0C + 273.15$

List of abbreviations

AC	Asbestos Cement
AfDB	African Development Bank
Agritex	Department of Agricultural, Technical and Extension Services (Zimbabwe)
BOQ	Bill of Quantities
BS	British Standard
BSI	British Standards Institution
CAS	Central African Standard
CI	Cast Iron
CIFZ	Construction Industry Federation of Zimbabwe
c/w ratio	cement/water ratio
GI	Galvanized Iron
GL	Ground Level
GS	Galvanized Steel
IFAD	International Fund for Agricultural Development
ISO	International Organization for Standardization
Kpa	Kilopascal
kW	Kilowatt
LDPE	Low Density Polyethylene
NSR	Night Storage Reservoir
OGL	Original Ground Level
PC	Portland Cement
PE	Polyethylene
PVC	Polyvinyl Chloride
SABS	South African Bureau of Standards
SAZ	Standards Association of Zimbabwe
uPVC	unplasticized Polyvinyl Chloride
WB	World Bank
ZGCC4	Zimbabwe General Conditions of Contract - 4th edition, 1984
ZIE	Zimbabwe Institute of Engineers
ZW$	Zimbabwe Dollar

Chapter 1
Preparation of a tender document by the client

This Chapter provides guidelines for engineers for the preparation of a tender document. It is not possible to cover all aspects in a subject so vast and where the standards of countries may vary from one to another. However, by virtue of the fact that the principles of engineering are the same, the aspects covered here should be common to many countries. The definitions used are only a guide and should be correctly interpreted for local conditions.

1.1. The tender document

A tender document is a document that invites qualified contractors to submit quotations for the supply of equipment, materials and services for the construction of a project, in this case an irrigation scheme. In order for the potential contractors to make proper submissions, the tender document should give a general description of the works to be undertaken and more specific instructions relating to equipment, materials, earth-works, concrete works, pipe-laying, land preparation and others.

Tender documents are prepared when the client, also known as the initiator of the project, is satisfied with the feasibility and design report prepared by the engineer and gives a go-ahead for the tendering of the project.

1.2. Types of contracts for which a tender document can be prepared

In preparing the tender document, it is important for the engineer to know the types of contract under which the job can be classified. The tender document should reflect the type of contract. Contracts can be classified as follows:

- Measurement contract
- Fixed fee or lump sum contract
- Cost reimbursable contract
- All-in-all contract, package contract or turnkey contract

Any combination of the types of contracts described below can be built into one contract, depending on their suitability for the project concerned.

1.2.1. Measurement contract

Under a measurement contract, the contractor is paid for the work done in accordance with the rates and prices they provide beforehand and included in the contract itself. The *Bill of quantities contract* and the *Schedule of rates contract* are the two most common types of measurement contracts.

Bill of quantities contract

This contract is based upon a detailed bill of estimated quantities prepared by the engineer. The contractor then enters a price against each item in the bill. The contract price is the total of the quoted rates. During construction, the actual quantity under each item is measured and valued at the quoted rate. A provision is made for the valuation and adjustment of rates for varied or additional work.

Schedule of rates contract

In this contract, a list of the components of the work the client wants to be done is given to the contractor. No quantities are given. The contractor provides the rates for the different items. They can be called upon to execute any item(s) within the geographic area and therein stated time of that contract and will be paid based on the rates provided.

1.2.2. Fixed fee or lump sum contract

Where the cost can be accurately estimated and no price variation is anticipated, a fixed fee or lump sum contract can be entered into. This contract covers the overall cost of the project and is normally used for small projects. The contractor is paid for the actual work done in accordance with the rates and prices they provide at the tendering stage.

1.2.3. Cost reimbursable contract

This contract allows for the payment of the actual expenditure on wages, plant and equipment plus overhead costs and profit. The profit is subject to negotiation or competitive tendering and can be a fixed fee or a percentage of costs.

1.2.4. All-in-all contract

This type of contract, also called a package or turnkey contract, covers everything from design to construction. It can be any of the above types of contract.

1.3. Content of a tender document

A tender document consists of the documents that the client provides to the tenderer. They may include all or some of the following information:

1. Instructions to tenderers
2. Conditions of contract
3. Technical specifications
4. Drawings
5. Bill of Quantities (BOQ)
6. List of documents to be completed and/or submitted by the tenderer: letter of submission, form of tender, certificate of site visit, tender guarantee, advance payment guarantee, performance guarantee, bank credit letter and affidavit, programme/schedule of works, list of staff, list of equipment and machinery, performance characteristics of all equipment to be installed in the project, list of sub-contractors, variations to tender, company profile, sworn statement to client.

The tenderer completes the tender document, prepares the priced BOQ and submits both to the client, together with the documents requested for submission with the tender.

1.4. Instructions to tenderers

This is usually the first section of bound volumes of a tender document. The purpose of instructions is to ensure that all the tenderers are properly informed about what to do and what to submit during tendering. Although instructions may vary from one project to another, some of the more important items included in the instructions are:

- Closing date and time of submission of the tender
- Place of submission
- Number of copies of tender documents to be submitted
- Date of site visit
- Information to be submitted

1.5. Conditions of contract

The heart of any contract document is section on *Conditions of contract*. This section sets out the contract's legal framework and the general obligations of the contractor, the employing authority and their employees. The Conditions of contract normally consist of two parts, general conditions and special conditions. Each country usually has standard *General conditions of contract*, while the *Special conditions of contract* are specifically prepared to suit the circumstances particular to the nature of project works. General conditions are normally available to all contractors in a particular country. In Zimbabwe, for example, these are available in the Zimbabwe General Conditions of Contract 4th edition of 1984 (ZGCC4), prepared by the Zimbabwe Institution of Engineers (ZIE) and the Construction Industry Federation of Zimbabwe (CIFZ). They do not necessarily have to be repeated in a tender document, but should be constantly referred to. Contractors are normally asked to obtain the document from the relevant authorities at their own expense, if they so wish. Some non-exhaustive highlights of General conditions of contract from ZGCC4-1984 are given below.

1.5.1. General conditions of contract

The document carrying the *General conditions of contract* is normally not supplied by the client. The contractors should obtain it, at their own expense, from the relevant authorities in the country where the works will be carried out. Following are excerpts of the *General conditions of contract*:

Definitions and interpretations

Some of the important definitions used in the preparation of tender documents are:

Client: Also called initiator, promoter or employer, is the one responsible for providing the funds for the project. Examples of clients in agricultural projects in Eastern and Southern Africa include the Government of the country (through, for example, the Department of Irrigation or the Department of Water), the Food and Agriculture Organization of the United Nations (FAO), the International Fund for Agricultural Development (IFAD), the World Bank (WB), the African Development Bank (AfDB).

Engineer: The person appointed by the client and notified in writing to the contractor as having the overall engineering responsibility for the design and supervision of the construction of the project.

Contract: The general conditions of contract, the special conditions of contract (if any), the technical specifications, the drawings, the priced bill of

quantities, the schedule of rates (if any), the tender, the letter of acceptance, the contract agreement and the deed of suretyship (if any).

Contract price: The sum named in the tender, subject to additions or deductions that may be made from time to time.

Special conditions: This refers to any additions to departures from or amendments of the *General conditions of contract*, as set out in an annex or as attached to the *Form of tender*.

Language and law of the contract

Usually the language of the contract is deemed to be the official language(s) of the country in which the agreement has been entered into. In Zimbabwe for example, the official language is English, so any contract in that country has to be in that language.

The law of the contract, which is the law that will be used to interpret the contract, is usually the law of the country in which the work is to be carried out.

Amendments by tenderer

Should the tenderer desire to make any departures from, or modifications to, the conditions of contract, specifications, bill of quantities or drawings, or desire to qualify their tender in any way, they shall set out their proposals clearly in a covering letter attached to the tender.

Access to land and compensation

The engineer shall arrange for access to all land required for the works, including land required for borrow pit areas, quarries, housing and other items. The contractor shall not be involved in any cost in respect to land acquisition or compensation, but shall be responsible for the provision and cost of the means of physical access, such as construction and maintenance of haul roads if needed.

Site visit

A compulsory visit to the site will be organized for all tenderers in order for them to acquaint themselves with local conditions, the difficulties to be overcome and so on. Any questions on the part of tenderers will be clarified during the site visit. Tenderers should provide their own transport and subsistence. After the visit, tenderers will be issued with a certificate of site visit and this will be one of the documents to be submitted with the tender.

Bonds

Normally, tenderers are required to take out bonds at the time of tendering and after the tender is accepted. Bonds are insurances that safeguard the client against financial loss if the contractor or tenderer fails to fulfil the commitment undertaken. The contractor has to pay for the bonds and the cost becomes part of the contract price. Some bonds normally taken out are as follows:

- *Tender bond*: This bond is some form of guarantee supplied by the contractor during tendering, usually from a recognized bank or insurance company. In Zimbabwe, the value of this bond is set at 2% of the tender value. The value of the tender bond should be paid to the client to meet the expenses of obtaining fresh quotations in the event that the contractor refuses to accept a contract after tendering.
- *Performance bond*: This bond is intended to compensate the client for extra costs, should the contractor fail to complete the works as per the contract. This is normally a substantial sum of money, usually 20% of the contract value in Zimbabwe.
- *Repayment of advance payment*: Advance payment is only required when the contract indicates the need for an advance payment to assist in the mobilization of the contractor's equipment and staff to site. The payment is normally made before the construction of any permanent works commences. The bond is intended to provide for repayment, should the contractor default at this stage.

Insurance

Any insurance taken out by the contractor in accordance with the *General conditions of contract,* or for any other reason in connection with the contract, shall be effected through a firm registered in the country in which the works shall be carried out. This insurance is over and above the bonds discussed above. Usually, the contractor should take out four types of insurance and it is normal for the client to approve the policies before the contractor starts work. The four types of insurance the contractor takes out are as follows:

- The works against any damage due to accident
- The workforce (a contractor who does not insure their workforce is a risky one)
- Claims for third parties in case there is an accident to other parties during construction
- Transport (normal motor insurance for any transport vehicles provided by the contractor)

Retention money

Retention money is payment that the client withholds from the contractor until certain conditions are fulfilled, such as maintenance of the works for a specified time.

For example, this section of the *General conditions of contract* may be worded as follows: "The retention money shall be ten percent (10%) of the total tendered costs, to be paid at the end of the maintenance period and upon fulfillment of the guarantee terms."

Time schedule

For their tender to be considered, the tenderer shall specify the duration of the construction and state the time of initiation and completion of works. No conditional statements with respect to the availability of material and equipment will be acceptable. At the time of tendering, the tenderer shall provide the client with a schedule /programme of implementation.

If the construction of the project is urgent, it should be explained under this heading that a shorter period of construction would be considered as an advantage in the analysis of the tender.

Revision of prices

In accordance with the *General conditions of contract*, the contract price shall be subject to adjustment in respect of variations in the cost of labour, equipment or materials. Any price changes are usually calculated using the standard price adjustment formula that is available in the *General conditions of contract*. In some cases the formula may complicate matters. In those instances the client might seek proof of any price change from the contractor once a claim is raised.

Penalty

Any delays in the completion of works will carry a penalty, usually equivalent to a percentage of the value of the works, as specified in the *General conditions of contract.* In Zimbabwe, it is set at one percent (1%) of the tendered sum per week, which will be deducted from the retention money. Non-availability of materials and equipment shall not be accepted as reasons for exemption from penalties, should there be any delay in the completion of the tendered works.

Quality control

The testing of material shall be the responsibility of the engineer. The contractor will only be required to carry out such specific testing or control procedures as may be individually detailed as their responsibility elsewhere in the contract. This notwithstanding, the contractor shall at all times be free to carry out, at their own expense, any tests that they may wish as aid to the control of their operations. In the event of any lack of agreement on test results, those from the engineer shall be taken as ruling. Procedures and test results shall at all times be open and available to the contractor.

Based on the results obtained from the tests carried out, the engineer will direct and advise on alterations in materials and operations that may be necessary in order to meet the specified quality of the works.

Provisional quantities

All quantities shown in the BOQ are normally provisional, calculated in good faith and to the best information available. In cases where certain quantities of work cannot be accurately determined until execution, these shall be subject to variation. Such variation shall not justify an alteration in billed unit rates (see section on variation order).

Measurement

For the purpose of measuring the permanent work the *Record drawings* or *As built drawings*, prepared by the contractor, are used after verification, checking and approval by the engineer.

Foreign currency

The award of the contract shall not be regarded as justification for an application for an import permit. The contractor is required to make an application for foreign exchange allocations through the normal channels and the engineer cannot give assistance in the granting thereof.

List of staff and personnel

Tenderers are required to list, at the time of tender, the staff and personnel who will be employed on the contract. If it is the intention to employ expatriate personnel, it will be the contractor's sole responsibility to obtain the necessary *Residence permits* and *Work permits*. The client cannot provide any form of assistance in the granting of these permits.

Guarantee of materials and equipment

The contractor shall guarantee against all defects of materials, equipment and workmanship provided, for a period of one year from the date of commissioning.

Order of precedence of contract documents

In the case where conflict may exist between different sections of the contract document, the following is the order of precedence in interpretation, subject always to the specified amendments of exclusions:

- General conditions of contract
- Special conditions of contract
- Technical specifications
- Bill of Quantities
- Drawings

Variation order

Any changes in construction, not envisaged in the design stages or at the time of acceptance of the tender but necessary for the proper execution of the works and/or proper operation of the system, can be made upon the written instruction of the client's engineer. The contractor should respond in writing, stating the cost of such changes. The contractor can only commence or continue with the construction of the necessary works upon written approval of the engineer.

1.5.2. Special conditions of contract

Any of the examples given under General conditions can become Special conditions if the tender document provides conditions different from the General. For example, if the General conditions call for 10% retention and the client believes that raising it to 15% results in better service during the maintenance period, this becomes a Special condition. Special conditions of contract usually include information on day-works, material, site laboratory for quality control, accommodation and contractor's areas, hygiene and health, progress report and, completion of works. The following is an example of *Special conditions of contract* from tender documents floated in Zimbabwe.

Day-works

If in their opinion it is necessary or desirable, the engineer may order in writing that any additional or substituted work shall be executed on a day-work basis. The contractor shall then be paid for such work under the conditions set out in the *Day-work schedule*, included in or attached to the bill of quantities and at the rates and prices affixed thereto by them in their tender. In the absence of a day-work schedule, they shall be paid the actual cost of the time expended and the materials used in the additional or substituted work, plus the percentage allowances stated in the appendix to the *Form of tender* in respect of:

i. The gross remuneration of the workers actually engaged

ii. The net cost of the materials actually used in the completed work

These allowances will be held to cover all charges for the contractor's and sub-contractor's profits, time keeping, clerical work, insurance, establishment, superintendence other than allocated supervisor's time, and the use of hand tools. If the contractor fails to fill in the percentage day-work allowances in the appendix, those stated therein by the client shall apply. The use of equipment shall be charged out separately, on a time basis, at the rates tendered or otherwise at rates to be agreed upon by the contractor and the engineer.

If required by the engineer the contractor shall, before ordering materials, submit to the engineer quotations for their approval and shall furnish them with such receipts or other vouchers, as may be necessary to prove the amount paid. In respect of all work executed on a day-work basis, the contractor shall, during the continuance of such work, deliver each day to the engineer an exact list in triplicate of the occupation and time of all workers employed on such work and a statement also in triplicate showing the description and quantity of all materials and equipment used thereon or therefore (other than equipment that is included in the percentage addition in accordance with the schedule under which payment for day-work is made). Duplicate copies of each list and statement will, if correct or when agreed upon, be signed by the engineer and returned to the contractor.

At the end of each month the contractor shall deliver to the engineer a priced statement of the labour, materials and equipment (except as aforesaid) used and they shall not be entitled to any payment unless such statement has been fully and punctually rendered and supported by the aforesaid counter-signed lists and statements, always provided that, if the engineer shall consider that for any reason the submission of such list or statement by the contractor in accordance with the foregoing provision was impracticable, they shall nevertheless be entitled to authorize payment for such work either as day-work (on being satisfied as to the time employed and equipment and materials used on such work) or at such value therefore as is considered fair and reasonable.

Material

The contractor shall be responsible for the selection of sources of suitable materials for use in the works and shall be entirely responsible for all risks arising from the selection and working of such sources.

The engineer shall approve the sources chosen by the contractor before the contractor may use them. The contractor shall nevertheless be bound to give them up and open new sources, should the material taken from the first sources no longer be of acceptable quality. In the event of the contractor having to open up new sources, they shall have no claim to payment for the exploration and development of the new sources nor shall they be entitled to any increases in their tendered unit rates or sums.

It shall be the contractor's responsibility to ensure that only suitable materials are taken from the approved sources. Should the question of compensation arise in the case of rock, earth or sand required for the works, the supervisor will negotiate with the owners and bear the cost thereof.

All soil, gravel, stone, wood or other material obtained in the excavations, clearing and stripping on the site shall belong to the client and should normally not be removed from the site without the written consent of the engineer.

Site laboratory

The provision and running of a site laboratory, including supply, all testing equipment necessary and personnel, shall be the responsibility of the engineer. Procedures and test results shall at all times be open and available to the contractor. This notwithstanding, the contractor shall at all times be free to carry out any tests that they may wish as an aid to control their supervision of the construction of the works. In the event of any lack of agreement on test results, those results from the engineer shall be taken as ruling.

From the results obtained from tests carried out, the engineer will direct and advise on alterations in materials and operations that may be necessary in order to meet the specified quality in the works.

Accommodation and contractor's areas

The contractor may select areas for housing, offices, plant yards and workshops within the general area of the works, but must liaise with the engineer regarding their precise location. The contractor will not be allowed temporary occupancy within the area to be developed for irrigation nor any other place that the engineer wishes to reserve for other uses.

Labour housing must be of a standard acceptable to the engineer, yet compatible with the duration and value of the contract. Materials used for construction of walls and roofs may be brick, concrete, asbestos sheeting, timber, or corrugated or sheet steel. The rooms shall be large enough to afford each occupant at least four and a half (4.5) square metres of floor area and ten (10) cubic metres of air space and shall be well cross-ventilated (ZIE and CIFZ, 1997).

Adequate cooking shelters shall be provided. These shall be roofed structures, three sides of which shall be protected to a height of at least one (1) metre above ground level.

The contractor shall be responsible for the control of all their labour housing in the compound or elsewhere, and shall follow the instructions of the local authority in all relevant matters.

On completion of the contract, all labour housing and associated structures shall be demolished and the materials removed or disposed of to the satisfaction of the engineer.

Hygiene and health

The contractor shall be fully responsible for the proper control of labour camps and their occupants and for the maintenance of such camps in a clean hygienic condition.

One labourer shall be employed full-time on camp sanitation duties and adequate measures shall be taken to control vermin and insects and to maintain clean and hygienic conditions through camps and work sites. Regulations and by-laws of the local authority shall be observed and facilities shall be provided for inspection by authorized persons.

Progress reports

During progress of the works, the contractor shall provide the engineer with suitable progress reports, which shall be compiled and dispatched at the end of the month to cover progress during that period and the total works completed to date.

The progress reports will indicate:

- Planned progress to date
- Actual progress to date
- Variance between planned progress and actual progress
- Reasons for variance in progress
- Revised work plan/completion date
- Important issues on which the engineer should be informed

Completion of works

When the contract works have been completed the contractor shall, at their own expense, remove all rubbish, surplus materials and debris, unused material, temporary erections and equipment. The contractor shall make the site and adjoining ground perfectly clean and to the satisfaction of the engineer.

1.6. Technical specifications

The technical specifications give a detailed engineering description of the works, nature and quality of materials, workmanship and in some cases the methods to be used, for example for excavation.

The variety of irrigation equipment in today's international market makes the procurement process intricate and sometimes confusing. It is therefore necessary for the potential contractors or tenderers to know exactly what they would like to purchase and to specify it in the tender documents. Standards provide the means for specifying what the buyer wants and guide the manufacturer to produce the equipment desired by the market. Therefore, standards are a common language between buyers and sellers in the process of equipment and material procurement. Generally, the more detailed the specifications, the less conflict there is between the buyer and the seller, therefore less variable orders.

Depending on the irrigation system and equipment to be used, some of the relevant international standard specifications are given in Table 1.

Chapter 3 gives examples of technical specifications for a surface irrigation system and Chapter 4 and 5 give examples of pressurized (drag-hose sprinkler and drip) irrigation systems.

1.7. Drawings

The elevations shown on all layout drawings should refer to the benchmarks located on the site and, while executing the works, the contractor shall refer all works to the known elevations.

Drawings should be accurate pictorial representations of the proposed works. They set out the situation and constructional details of the works. The drawings included in the tender documents are diagrammatic. They should be sufficiently detailed to allow the contractor to price the bill of quantities satisfactorily.

On their part the contractor should verify these drawings according to the actual situation in the field and prepare *Working drawings*, with all the required details, to assist in implementing the works properly and accurately. The engineer should approve these drawings before implemention. The contractor should update the *Working drawings* on a daily basis. These drawings, which show the actual field situation and the system as it has been built, will be the basis for the preparation of the *As built* or *Record drawings.* The drawings are submitted to the engineer in a reproducible form (tracing) for filing and future reference.

It is recommended that a set of drawings should comply with the following:

- Be prepared to standard, for example British Standard (BS) 308 or any other standard applicable
- Be listed on a drawing schedule
- Be of a standard size
- Have a unique reference number
- Have any amendments clearly indicated and dated
- Have a title block with the name of the client, the engineer, the designer, the draughtsperson, as well as the drawing scale and date
- Have a line scale to allow for the reduction of the drawing

Table 1
Examples of international standard specifications

Standard	Year	Content
SABS	1976	Standards specifications for components of unplasticized Polyvinyl Chloride (uPVC) pressure pipes for potable water
International Standard 2548	1973	Centrifugal, mixed and axial pumps – Code of acceptance tests – Class C
International Standard 8026	1985	Irrigation equipment – Irrigation sprayers – General requirements and test methods
International Standard 8224/1	1985	Traveler irrigation machines – Part 1: Laboratory and field test methods
International Standard 8224/2	1985	Traveler irrigation machines – Part 2: Softwall hose and couplings – Test method
International Standard 7749/1	1986	Irrigation equipment – Rotating sprinklers – Part 1: Design and operation requirements
International Standard 7749/2	1990	Irrigation equipment – Rotating sprinklers – Part 2: Uniformity of distribution and test methods
International Standard 9260	1991	Agricultural Irrigation Equipment – Emitters – Specifications and test methods

Standard drawings can be used to represent some aspects of the work, but drawings for a particular project must be specific to it. For details on technical drawings, the reader is referred to Module 6.

1.8. Bill of Quantities

The Bill of Quantities (BOQ) is a descriptive list of each item of work, material or provision included in the project, along with an estimate of the quantity required for each. The quantities and the description of the works are derived from the drawings and specifications. Blank columns should be provided in the table of the BOQ, for tenderers to fill in their unit prices (rates) against each item. The BOQ has the following advantages:

- It provides equal opportunity for all tenderers to enter a unit price or rate against each item. By summing up the total cost for each item, along with the quantities entered by the engineer, the total tender sum is thus derived on a basis common to all tenderers
- It provides a basis for making progress payments, deriving costs for additional work and evaluating deductions which could arise as a result of deletion of some items from the contract
- It can be used as reference for cases of adjudication

During construction, the actual quantity relating to each item is measured and entered into a blank bill, which is held for measurement and payment purposes. The payment is at the tender rate.

The preamble to the BOQ in the tender documents should clearly indicate any particular obligations imposed by the contract in order to allow tenderers to assess the financial implications. As an example, the preamble to the BOQ should:

- Direct tenderers to familiarize themselves with the requirements and provisions of the contract documents
- State the basis upon which the BOQ has been drawn up
- State that the unit prices should be entered against each item, otherwise it is assumed to be covered elsewhere

Examples of BOQs are given in Chapters 3, 4 and 5, which refer to surface, sprinkler and localized irrigation schemes respectively.

Chapter 2
Submission of a tender document by the tenderer

The tender document, prepared by the client as described in Chapter 1, has to be completed and submitted by the tenderer on or before the closing date and time of the tender. The documents to be included by the tenderer are those discussed below and are used for selection purposes.

2.1. Letter of submission

The *Letter of submission* is completed on the letterhead of the tenderer and should include:

- The full postal address
- Telephone numbers
- Fax and telex numbers

A typical *Letter of submission* is shown in Example 1.

2.2. Form of tender

The *Form of tender* is usually a single piece of paper summarizing the value of the tender and listing the currency in which payment is to be made. It also states the period in which the tenderer proposes to complete the works. It is prepared by the engineer and filled in by the tenderer, committing the tenderer to do the job for the tendered amount and showing the sureties of the tenderer. It normally contains an appendix that summarizes other information that should accompany the submission.

Examples 2 and 3 show the typical layout of a *Form of tender* and the *Appendix to the form of tender* respectively.

2.3. Certificate of site visit

For some tendered works a site visit is compulsory. The engineer organizes a date for the site visit. Tenderers on their part provide their own transport to the assembly point and subsistence. Specific directions are given to the assembly point. During this visit, tenderers are provided with clarifications by the engineer, who will be prepared to answer their questions.

After the visit tenderers are issued with a *Certificate of site visit* which will be one of the documents to be submitted with the tender. Example 4 shows the common format of *Certificate of site visit*.

2.4. Tender guarantee

The *Tender guarantee* should be for the sum specified in the instruction to tenderers and be summarized in the Appendix to the form of tender. It should be an irrevocable bond from a reputable insurance company or bank.

2.5. Advance payment guarantee

The contractor may be given an advance payment upon award of the contract to start the works. At the tender stage the employer may request the tenderers to provide proof that they are able, if their tender is accepted and are given an advance payment, to provide a guarantee for the full amount of the advance payment. The advance payment should be in the form of an irrevocable bond from a reputable insurance company or bank.

2.6. Performance guarantee

Tenderers may be required to provide proof that they are able, if their tender is accepted, to provide a *Performance guarantee,* the value of which is specified in the instructions to tenderers and in the form of tender. They are normally required to produce the *Performance guarantee* within 14 days of a written request. The *Performance guarantee* should be in the form of an irrevocable bond from a reputable insurance company or bank.

2.7. Bank credit letter and affidavit

Tenderers are required to provide a *Bank credit letter* from a reputable commercial bank that is registered in the country where the works shall be executed. The letter should show the name and address (both street and postal) of the bank and be signed by a bank official. It must clearly state, among other things, the name of the tenderer and that of the project. Attached to the letter should be an affidavit signed by a Commissioner of Oaths. The information required might differ from country to country and may be dependent on the nature and/or size of the contract.

Example 1

LETTER OF SUBMISSION

To: Director of Agritex
P O Box CY639, Causeway
Harare, Zimbabwe

Dear Sir/Madam

1) Being duly authorized to represent and act on behalf of

.....

.....

and having fully understood all of the drawings and specifications and information provided, the undersigned hereby submit its Tender for the above works as one of the Tenderers for the following Contract package:

"NABUSENGA SURFACE IRRIGATION SCHEME – PUMPING AND INFIELD WORKS"

2) Attached to this letter please find the completed Tender Dossier.

3) The Directorate, through its authorized representatives is hereby authorized to conduct any inquiries and investigations in order to verify the statements, documents and information submitted in the Tender Dossier, and to seek clarification from our bankers, insurance agents/companies and clients regarding any financial and technical aspects. This Letter of application is also to serve as authority to our bankers, insurance agents/companies and clients to provide such information as requested by Agritex Directorate in order to validate our Tender, with regard to resources, experience and competencies.

4) The Directorate and its authorized representative may contact the following person for further information concerning the Applicant. The undersigned is fully authorized to act on behalf of the Tenderer.

Name: .....

Title : .....

Signature: .....

5) The submission is made on the full understanding that:

   i. The acceptance of a tender and any negotiations of a contract from a Tenderer will be subject to the verification of all information submitted in the tender, at the time of Contract negotiations.
   ii. The Directorate reserves the right to:
      - Amend the scope and contract value bid under the project. In such an event, The Directorate may either re-tender the bid, or the original tenderers will be asked to revise their bids.
      - Reject or accept any tenders
      - Cancel the tender process and reject all tenders and
   iii. The Directorate shall not be liable for any such actions and shall be under no obligation to inform the tenderers the grounds for them.

6) The undersigned declare that the statements made and the information provided in the duly completed tender are complete, true and correct in every detail.

Signed: .....

Name: .....

For and on behalf of:

Applicant: .....

Date: .....

Example 2

TENDER FOR CONSTRUCTION
NABUSENGA IRRIGATION SCHEME

FORM OF TENDER

To: Director of Agritex
P O Box CY639, Causeway
Harare, Zimbabwe

Dear Sir/Madam

Having examined the drawings, conditions of contract, specifications and bill of quantities for the performance of the above named work, we offer to perform the whole of the said Work in conformity with the said Drawings, Conditions of Contract, Specifications and Bills of Quantities,

We,

(.....

.....)

offer to perform the whole of the said works in conformity with the said drawings, conditions of contract, specifications and bill of quantities, for the sum of

ZW$ .....

in words: .....

.....

or such other sum may be ascertained in accordance with the said conditions.

In the event of there being any error of extension or addition in the priced bill of quantities, we agree to it being corrected with, however, the stated rate being taken as correct.

We undertake to complete and deliver the whole of the work comprised in the contract within the time stated by ourselves in the "Appendix 1" to Form of Tender as attached.

If our tender is accepted we will, if required and within the time stated, provide two good and sufficient sureties or obtain the guarantee of a Bank or Insurance or other Registered Company (to be approved in either case by you) to be jointly and severally bound with us in a sum not exceeding ten percent (10%) of the above named sum for the due performance of the contract under the terms and conditions of the Bond/Deed of Suretyship in the form annexed to the general conditions of contract.

This tender shall remain valid for a period of 60 days (sixty days) from the date mentioned here below, and is covered by attached irrevocable Tender Guarantee of 2% (two percent) of the bid price.

Unless and until a Formal Agreement is prepared and executed, this Tender, together with the written accept-ance thereof by yourself or the Engineer, acting on your behalf shall constitute a binding contract between us.

Signature of tenderer:.....

For and on behalf of: .....

Address:.....

.....

.....

Date:.....

Example 3

TENDER FOR CONSTRUCTION
NABUSENGA IRRIGATION SCHEME

FORM OF TENDER – APPENDIX 1

i)	Tender guarantee	Two percent (2%) of tender value
ii)	Performance guarantee	Ten percent (10%) to be provided within 14 days of request
iii)	Validity of performance guarantee	Until completion certificate
iv)	Minimum amount of Third Party Insurance	ZW$150 000.00 (1US$ = 5 ZW$)
v)	Work to be commenced	Within fourteen (14) days of notification to proceed
vi)	Date of completion of for all practical purposes	.....
vii)	Advance payment	Ten percent (10%) of contract price
viii)	Minimum amount of monthly certificates	Five percent (5%) of tendered sum
ix)	Advance payment guarantee be irrevocable	To cover full amount of advance payment and should ...
x)	Percentage retention	Ten percent (10%) of contract price
xi)	Price variation	Fixed prices; for items to be imported, final value will be the value according to customs rate of exchange on the day of payment.
xii)	Period of validity of tender	Sixty (60) days from the date of closing
xiii)	Penalty clause	One percent (1%) per week of contract value
xiv)	Time within which payment has to be made after receipt of the certificate by the employer	Thirty (30) days after the acceptance of the certificate

Signature of tenderer: .....

For and on behalf of: .....

.....

Address:.....

.....

.....

Date: .....

Example 4

TENDER FOR CONSTRUCTION
NABUSENGA IRRIGATION SCHEME

CERTIFICATE OF VISIT TO SITE

This is to certify that I .....

.....

For and on behalf of.....

.....

Visited the above named site on

.....(Date)

I carefully examined the site and had previously studied the Tender Document.

I have made myself familiar with all local conditions likely to influence the work and cost thereof.

I further certify that I am satisfied with the descrip-tion of the work and that I understand perfectly the work to be done as specified and implied in the execution of the Work.

Signature of tenderer: .....

For and on behalf of: .....

Dated: .....

I certify that the above mentioned visited the site on:

Dated: .....

Signature of engineer: .....

(for and on behalf of the Employer)

2.8. Programme/schedule of works

Tenderers are required to provide, as an attachment to the tender, a programme of all activities and scheduled time of starting and completing each activity until the system is in commission. As an example, for a surface irrigation scheme the activities could be broken down as follows:

- Verification of the design drawings and preparation of working drawings
- Clearing and stripping of pipeline, canal routes and borrow pits
- Excavation of pipeline trench in original ground and of canals in both original ground and embankment sections
- Excavation and earthworks for night storage reservoir
- Excavation of drains
- Earthworks for roads
- Excavations in borrow pit areas
- Batching
- Mixing
- Transporting
- Curing
- Canal lining
- Installation of offtake structures
- Installation of pumping unit
- Land preparation
  - Clear felling
  - Stacking and burning
  - Ripping
  - Secondary clearing
  - Leveling of anthills
  - Land leveling
  - Ploughing
- Fencing
- Testing
- Commissioning

2.9. List of staff

The contractor is required to provide a list of all the staff to be allocated to the construction of a project. The details of each staff member should indicate full name, highest qualification, date of birth, nationality, position to be held on the project, number of years of experience, construction experience and major projects worked on. The staff should include a project manager, site agent, engineers, technicians, pipe fitters and skilled workers. In the evaluation of tenders, particular importance is given to the proposed candidates for the position of project manager and site agent.

2.10. List of equipment and machinery

If the tender is successful, the contractor may be required to provide a list of all the equipment and machinery owned by the firm that will be used on the contract. For each piece of listed equipment the contractor will need to provide the make and model, date of manufacture, its present location, general condition and future work assignments.

A similar list of any equipment the contractor proposes to purchase or lease hire for the purposes of carrying out these works should also be attached.

2.11. Performance characteristics of all equipment to be installed in the project

The contractor may be required to provide and attach to their tender all the technical catalogues and data for all the equipment to be installed in the project. This may include the characteristics curves for the pump and motor, manufacturer's catalogues for pressure regulators, water meters, sprinklers, emitters, PVC pipes and fittings, air relief valve and whatever else is used in the construction of the scheme.

2.12. List of sub-contractors

In the event that the contractor intends to use sub-contractors for any part of the contract works, they should indicate such sub-contractors, giving full details and justification for using the sub-contractor(s). These details should include works to be carried out by each sub-contractor, fax and telephone numbers and contact person. The engineer must approve the sub-contractors. Sub-contractors are not allowed on site without written permission of the engineer. This permission may be withdrawn if, in the opinion of the engineer, the performance of the sub-contractor is below the accepted standards. In such cases the decision of the engineer is final.

2.13. Variations to tender

Should the tenderer desire to make any departures from, and/or modifications to, the *General conditions of contract,* specifications, Bill of Quantities, drawings or desire to qualify their tender in any way, they shall summarize the variant proposals clearly in the format shown in Example 5.

Example 5

VARIATIONS TO TENDER, PROPOSED BY TENDERER

Page Number	Clause Number	Description

Signature: ……..

For and on behalf of: ……

Date: ……

Alternatively, the tenderer may state the variant proposals in a covering letter attached as part of the formal tender. Should the tenderer fail to do either of the foregoing, this may cause the disqualification of the tender submission. If there are no departures or modifications desired, the table in Example 5 should be marked 'nil' and signed by the proposer.

2.14. Company profile

The tenderer must provide a *Company profile.* In the case of a Joint Venture, each participating firm must provide its own profile individually. The company profile must include contractor's identification and contacts, including street and postal addresses, organization of business, a list of partners in case of partnerships, limit of liability and company experience in the last three years.

2.15. Sworn statement to client

Finally, the tenderers fill in a *Sworn statement to client*, committing themselves to the proposals presented to the client. The sworn statement clearly states that they have read and understood the technical specifications and drawings of the said works and that the client has the sole right to verify the information provided. An official, representing the tenderer and stating full name and position, should sign the statement.

Chapter 3
An example of the preparation of a tender document for the construction of a surface irrigation scheme

Nabusenga surface irrigation scheme in Zimbabwe will be used here to illustrate how to write the *Special conditions* and *Technical specifications* for a surface irrigation scheme, for inclusion in the tender document (Agritex, 1990).

3.1. Background and access to the scheme

Nabusenga irrigation scheme is located 100 km east of Binga centre in the Siabuwa communal lands of Binga District of Matabeleland North Province. The scheme can be reached by road from Binga via Siabuwa to Gokwe and Karoi (Figure 1). It is a 15 ha surface irrigation scheme for smallholder farmers and lies on the southern bank of Nabusenga River. Water supply to the scheme will be by gravity flow from the existing Nabusenga dam. Water from this dam is also used to irrigate an existing scheme nearby.

A 1.6 km pipeline will convey water, by gravity, from the dam to a night storage reservoir (NSR) on the edge of the scheme. This pipeline will connect to an existing one that supplies water to the nearby existing scheme. The 15 ha scheme is divided into two blocks, based on their location in relation to the NSR. Block 2 (2.2 ha) is located immediately below the NSR, while Block 1 (12.8 ha) is located a little further away from the NSR.

3.2. Contract drawings

Some works are shown on the following contract drawings:

- NABU/1: Location map (Figure 1)
- NABU/2: Layout of the scheme (Figure 2)
- NABU/8: Typical cross-section of lined canal (Figure 3)
- NABU/11: Diversion structure with sluice gates (Figure 4)
- NABU/12: Saddle bridge (Figure 5)
- NABU/15: Standard drop structure (Figure 6)

3.3. General irrigation scheme layout

Figure 2 presents the layout of Nabusenga surface irrigation scheme. The 1.6 km long conveyance, or main supply pipeline, consists of AC pipes and steel piping for river and gully crossing. It crosses Nabusenga River twice and a deep gully once. Air release valves shall be placed on all high points along the pipeline profile.

The NSR, with a storage capacity of 2 000 m^3, shall be constructed at the highest point of the scheme. The water is distributed within the scheme through two types of canal sections, being 350 and 250 mm base width, for the larger Block 1 (12.8 ha) and one type of canal section, of 250 mm base width, for the smaller Block 2 (2.2 ha) (NABU/8). There are five diversion structures (NABU/11). Drop structures will be installed where the existing land slope exceeds the design canal gradient (NABU/15). Drains will be constructed at the bottom end of the irrigation fields. Infield roads and a perimeter or access road will be constructed. One canal crosses a field road and a culvert shall be constructed at that point. Where the field and perimeter roads cross the field drains, saddle bridges shall be constructed (NABU/12).

Figure 1
Location map of Nabusenga surface irrigation scheme

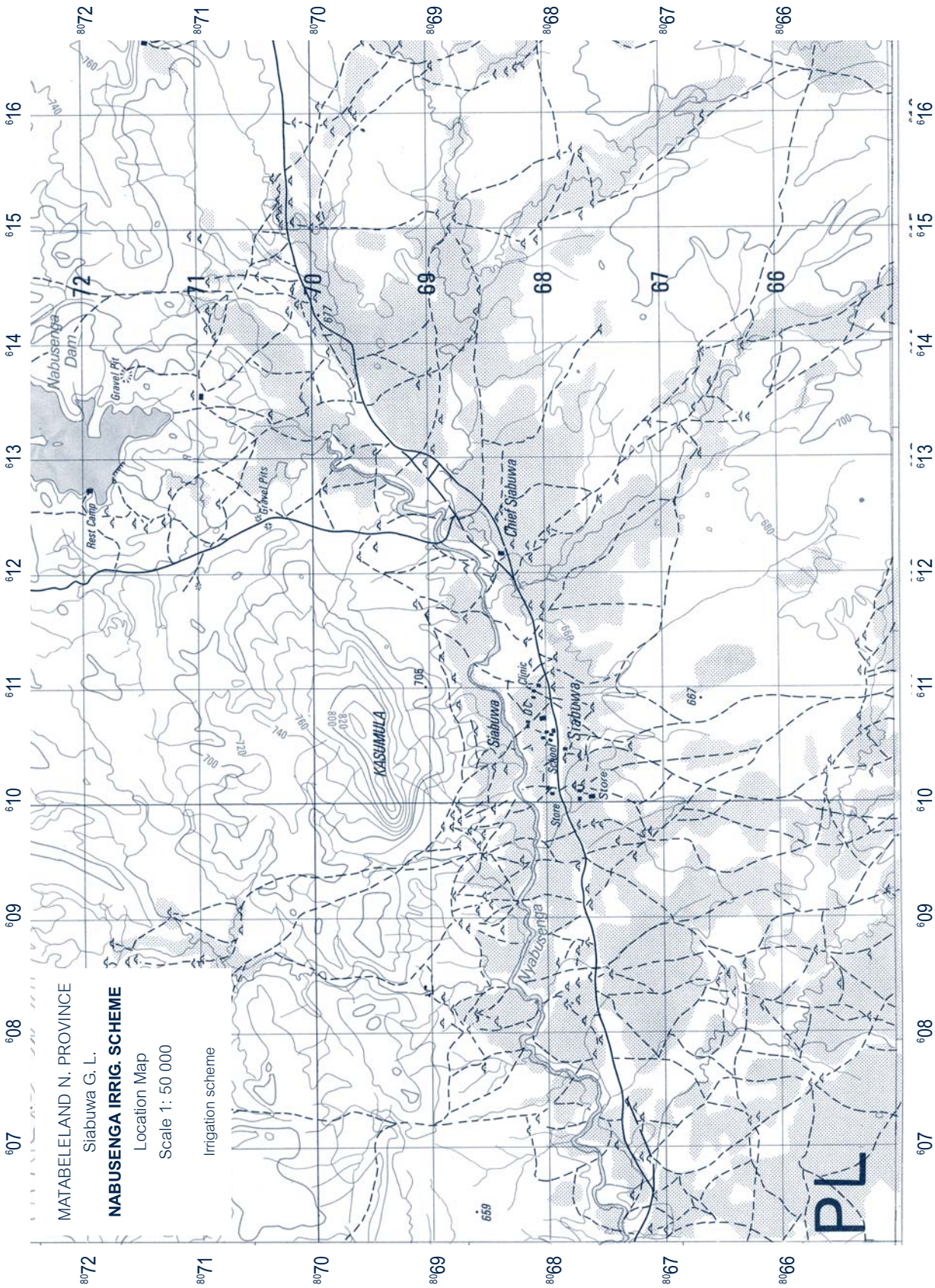

Figure 2
Layout of Nabusenga surface irrigation scheme

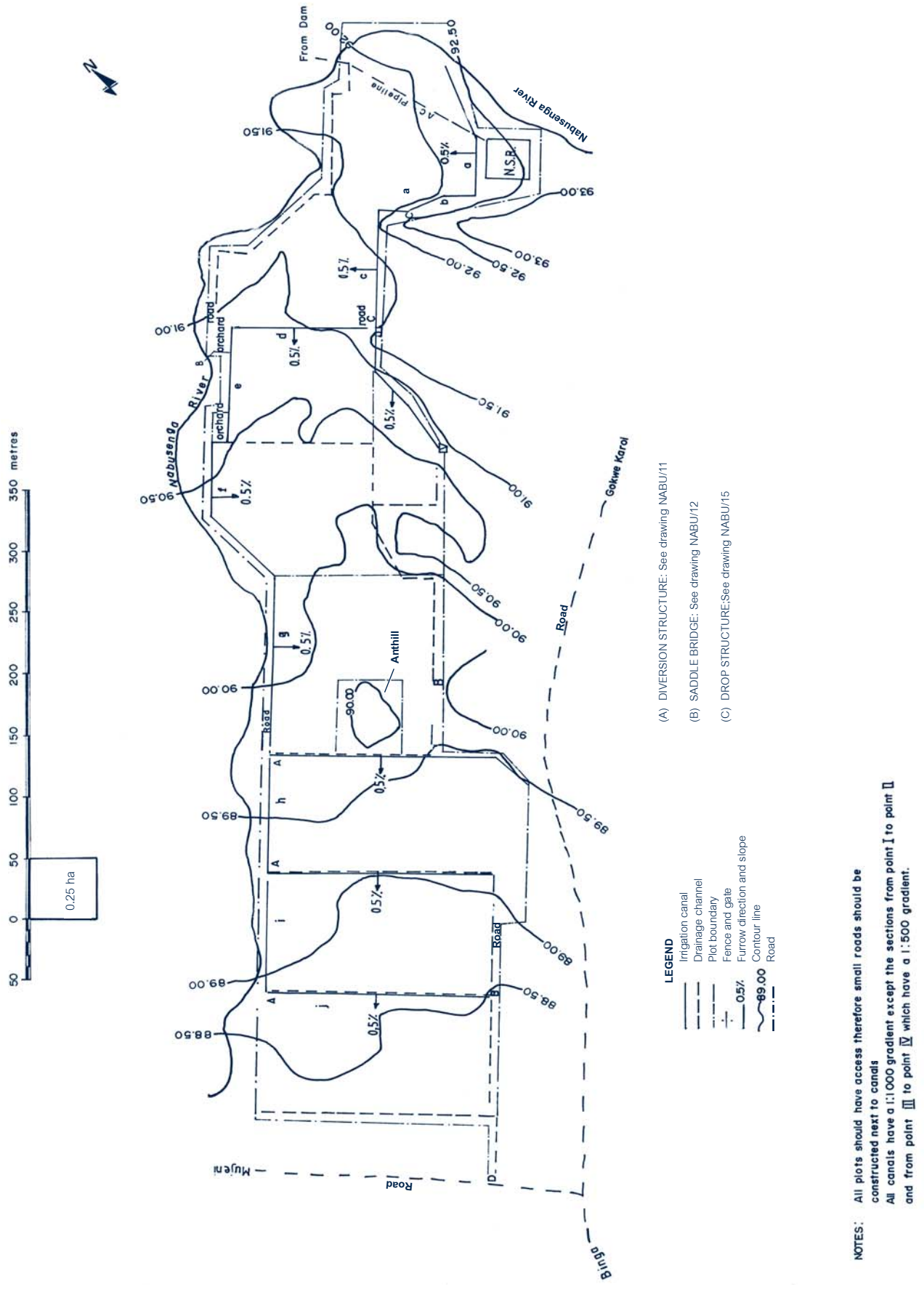

Figure 3
Typical cross-section of a lined canal (NABU/8)

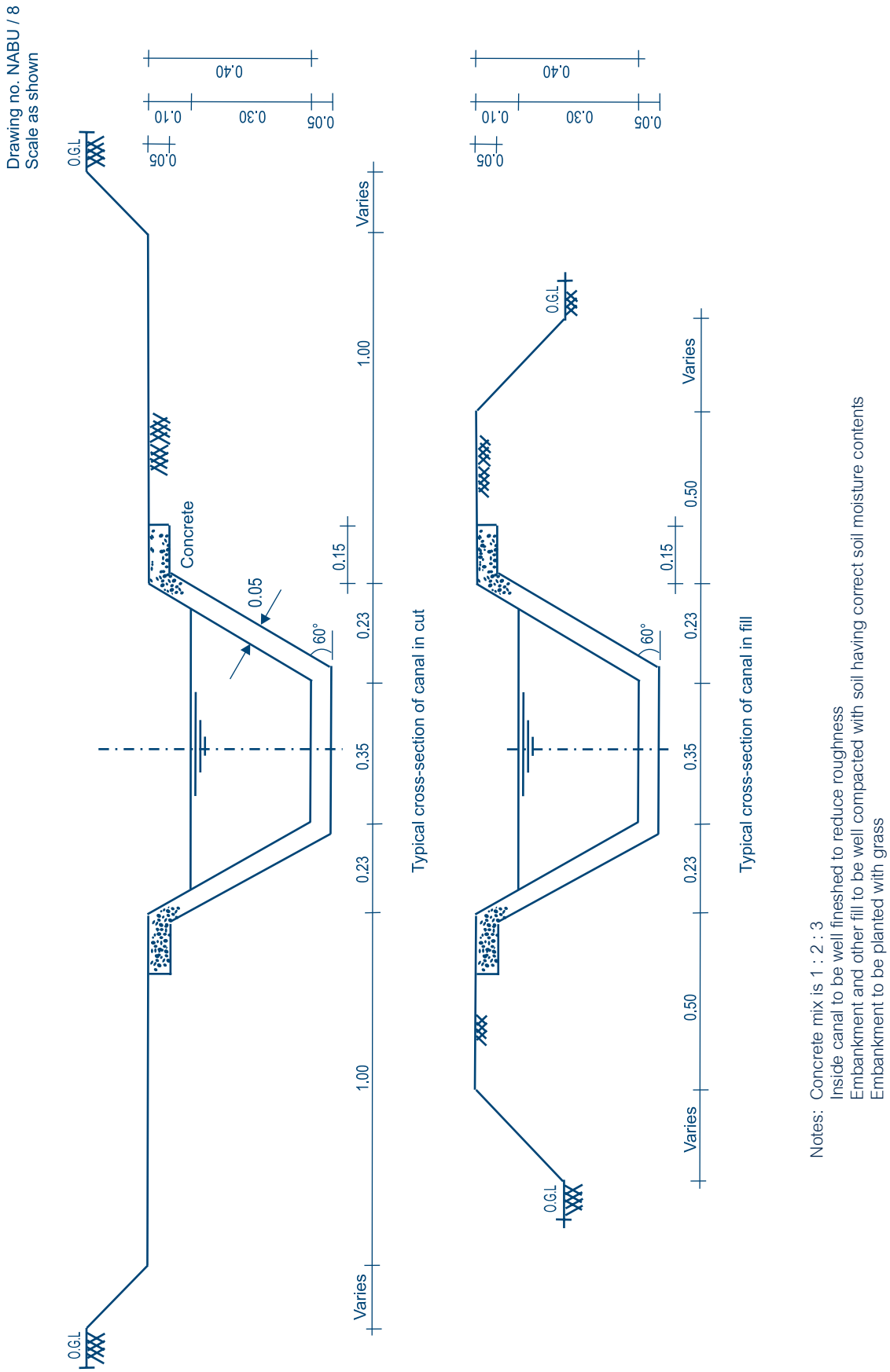

Figure 4
Diversion structure with sluice gates (NABU/11)

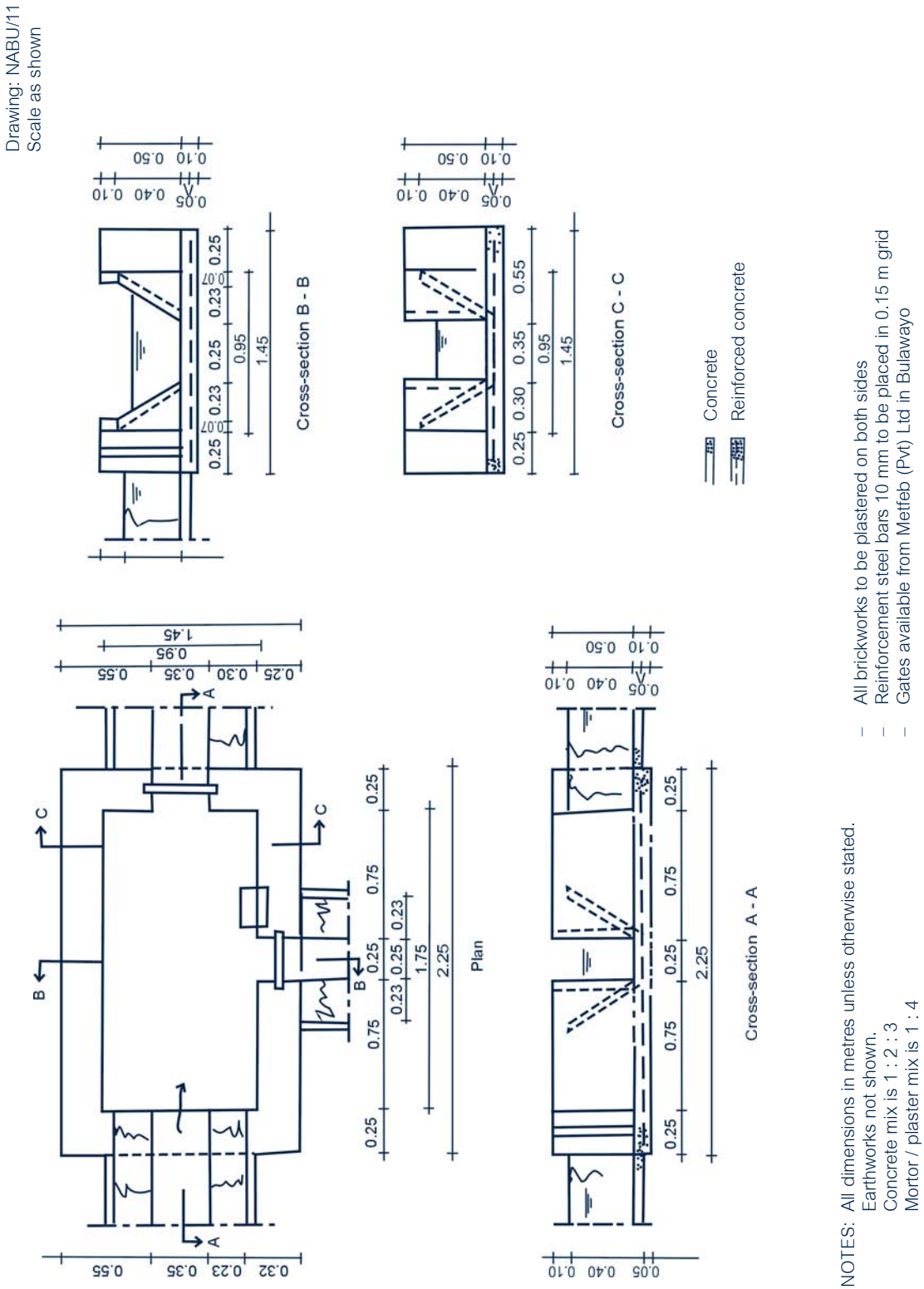

Figure 5
Saddle bridge (NABU/12)

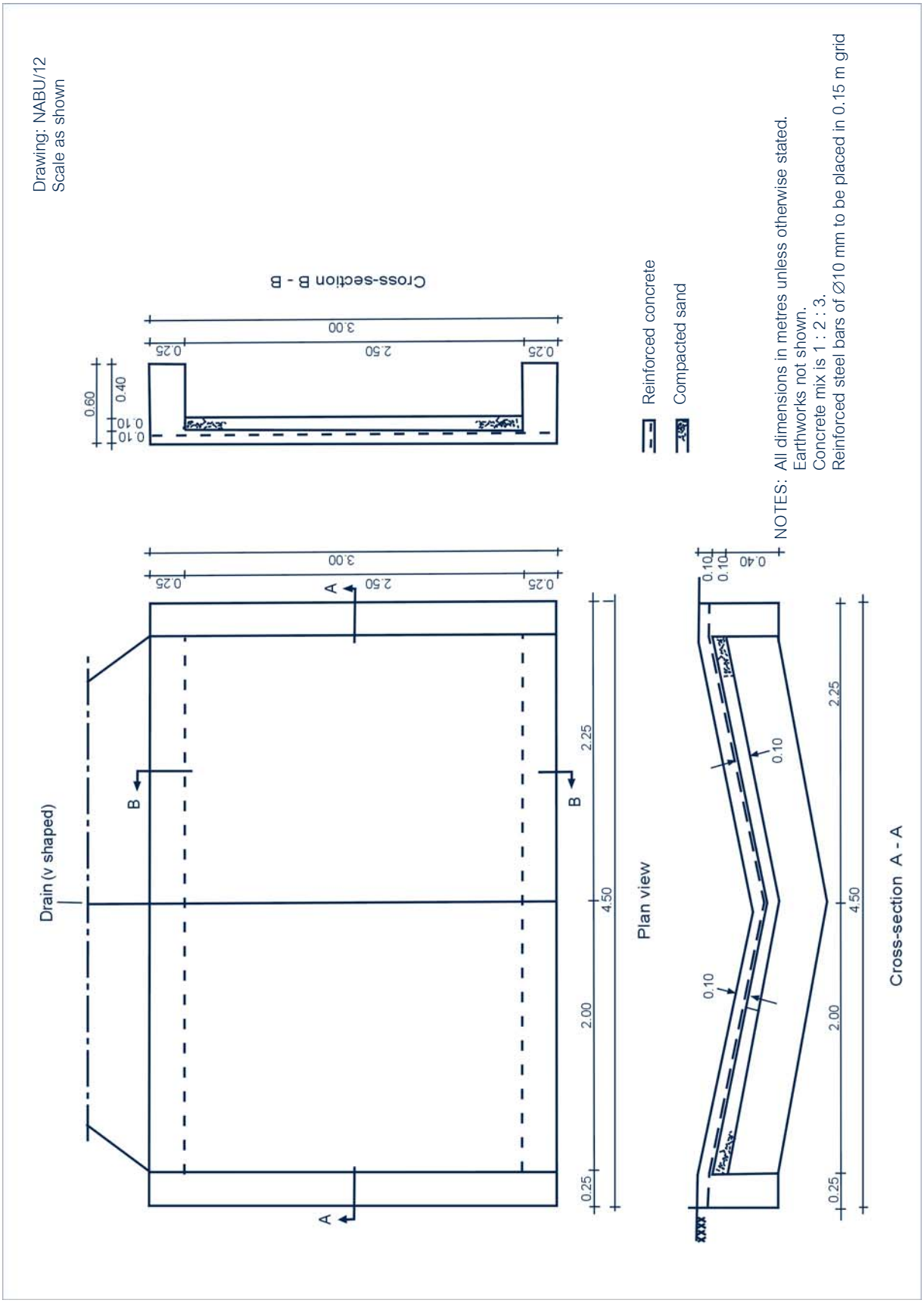

Figure 6

Standard drop structure without stilling basin (NABU/15)

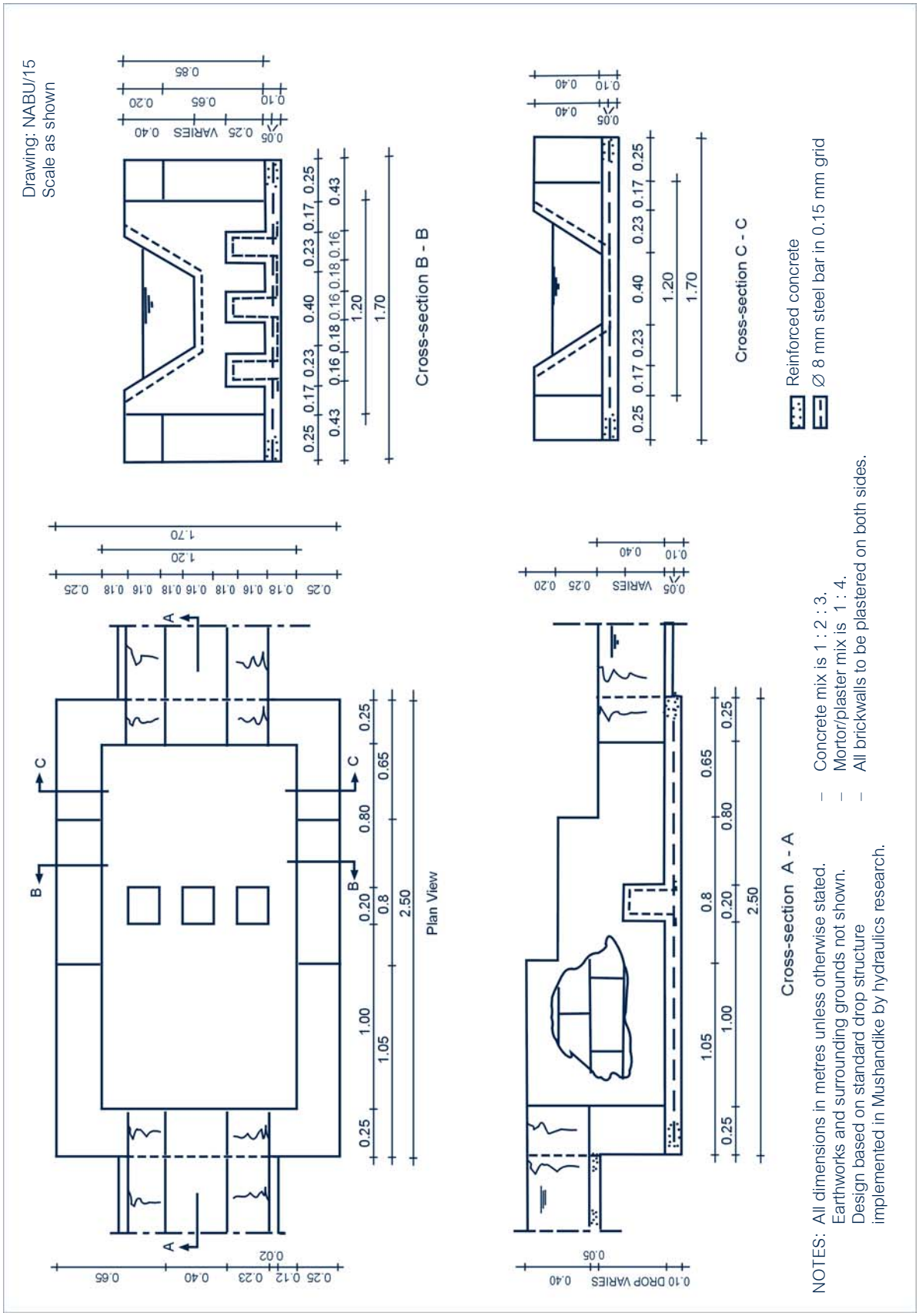

3.4. Special conditions

3.4.1. Materials

Except where otherwise stated or if approved by the engineer, all materials used in the works shall be of the best quality of their respective kinds as specified or described in the specifications and drawings. Wherever possible, the material shall comply with the current issue of the Standards Association of Zimbabwe (SAZ), the British Standard Institution (BSI) or other approved equivalent international standard as noted herein or approved by the engineer.

All material and equipment needed for the construction of the irrigation system shall be new, without flaws or defects, and of quality and performance as specified and shall meet with the requirements of the system. The contractor shall be responsible for the selection of the sources of suitable materials for use in the works and shall be entirely responsible for all risks arising from the selection and working of such sources. The engineer shall approve the sources chosen by the contractor before the contractor may use them. The contractor shall nevertheless be bound to give them up and open new sources, should the material taken from the first sources no longer be of acceptable quality. In the event of the contractor having to open up new sources, they shall have no claim to payment for the exploration and development of the new sources, nor shall they be entitled to any increase in the tendered unit rates or sums. It shall be the contractor's responsibility to ensure that only suitable materials are taken from the approved sources. Should the question of compensation arise in the case of rock, gravel, sand or clay required for the works, the engineer would negotiate with the owners and bear the cost thereof.

The cement used shall be obtained from approved manufacturers and be less than three months old when used. The engineer may arrange for tests to certify that the cement has not deteriorated.

All aggregates for the preparation of concrete should be obtained from sources approved by the engineer. The term 'fine aggregate' (sand) is used to designate aggregates in which the nominal maximum size of particle is 4.75 mm. The sand particles should be smooth, rounded and hard and they should be obtained from natural deposits such as riverbanks. The term 'coarse aggregate' is used to designate aggregates in which the nominal size ranges from 4.75 mm to 40 mm. They should consist of hard, durable rock that is rounded or chunky, and should be free from clay, organic matter, dust and other impurities. The stones should be about the same size.

Clean water should be used for the mixing of all concrete and mortar. It should be from a source approved by the engineer. As a rule, water suitable for drinking is suitable to be used for concrete.

3.4.2. Procurement, packing and delivery

Procurement and transportation of all materials and equipment for the construction works shall be the responsibility of the contractor. Cement should be delivered to the site of the works in properly-sealed bags and, while being loaded, transported and unloaded, be protected from the weather by effective waterproof coverings. Cement shall be delivered to the site at regular intervals in sufficient quantities to enable the work to proceed without delay, but not in such large quantities that would entail excessive storage at the site.

The contractor shall take great care to avoid damage to cement bags, AC pipes, fittings and specials during transportation. Pipes in transit shall be well secured and supported over the entire length and shall not be allowed to project over tailboard of the transporting vehicle. AC pipes and fittings shall not be dropped or thrown to the ground and impact with other pipes or solid objects shall be avoided.

3.4.3. Storage of materials and equipment on the site

The contractor should erect perfectly dry, well-ventilated weather and water-proof sheds, large enough to store sufficient cement to ensure continuity of work. The cement should be used on a first-in-first-out basis. The contractor shall take reasonable care to avoid any damage to the cement bags, AC pipes and fittings during storage and subsequent handling. Storage areas or sheds for AC pipes and fittings shall be in accordance with the manufacturer's recommendations and subject to the engineer's approval. They shall be level and clear of stones, with timber bearers of uniform size placed under the bottom rows of the stacked pipes at intervals of 800 mm. Particular care shall be taken to ensure that no damage occurs to the ends of pipes and fittings in order to avoid subsequent problems of jointing. AC pipe couplings shall be stored lying flat and precautions be taken to prevent damage to the sealing area. Rubber seal rings, gaskets and jointing materials for pipes and fittings shall be stored under cover, protected from direct sunrays, and away from grease and oil.

The contractor shall be deemed responsible for the deterioration of the materials and therefore for the replacement, if judged necessary.

3.4.4. Concrete

Concrete shall be composed of cement, fine aggregate (sand), coarse aggregate (crushed stone) and water, all well mixed and brought to the proper consistency. The aggregates and cement should be measured by volume in suitable gauge boxes or buckets. It can be assumed that a 50 kg bag of cement is equivalent to 40 litres of loose volume and that the yield of the mix is 60% of the loose volume of cement, sand and stone.

The concrete ingredients should be properly mixed in a concrete mixer of the drum type for not less than one and a half minutes after they, except for the full amount of water, are loaded into the mixer. The mixer should be loaded in the following order:

- Coarse aggregates and most of the water
- Cement
- Fine aggregates and the rest of the water

If mixing has to be done by hand, the aggregates and cement first should be mixed thoroughly. The water should be added gradually while continuing the mixing, after which the mixture should be turned over entirely at least three times. Care should be taken not to lose any liquid from the wet concrete.

The concrete should be of such consistency that it could be readily transported, placed and compacted without segregation of the constituent materials. The resulting concrete should be uniform and free from honeycombing (formation of small air pockets). The concrete should be transported as quickly as possible so that the required workability is not affected and that it is not contaminated by, for example, dust or rain. It should be used within 30 minutes of leaving the concrete mixer.

Test cubes should be made and used by the engineer for strength tests. The samples should be taken from the mixers or at the place of deposit. From each sample at least two cubes should be made for testing at 7 days and two for testing at 28 days. Testing should be carried out to the engineer's satisfaction.

Concrete should be protected from the harmful effects of sunshine, wind and running water during the first stages of hardening. The concrete should be covered with wet grain bags or other water-absorbing material as soon as the concrete has set. The grain bags should always be kept wet. After 2-3 days the grain bags should be removed and the canal stretch filled with water, which should stay there for 2-4 weeks. Since the freeboard of the canal is not covered by water it should be watered 3-5 times per day, depending on the weather.

3.4.5. Fencing

The scheme will be fenced. The fencing should consist of 1.20 m high pig netting (diamond mesh) and 4 strands (lines) of barbed wire, the top strand being 1.50 m above the ground level and the others placed at 100 mm intervals below it. Straining posts should be firmly embedded, anchored not more than 400 m apart and at all points of change of direction of the fence line. Standards (w-shaped or rounded) should be fixed not more than 14 m apart, with three droppers (twisted steel rods) equally spaced between every two standards. Holes are drilled in the straining posts and the standards for tying pig netting and to correspond to the required strand spacing and are drilled in the droppers to correspond to the required strand spacing.

Standard gates, having a clear opening of at least 4.25 m, should be erected where indicated by the engineer and should not be hung on straining posts. Gateposts should be secured in a concrete block of not less than 400 mm by 300 mm deep, which should not protrude above ground level.

Measurements for the fencing should be per 100 m of fence and the rate given in the BOQs should include for the supply, delivery and installation of all fencing materials. Measurements for the gates should be the number of gates erected and payment should include for the supply, delivery and erection of gates and gateposts.

3.4.6. Progress reports

The contractor shall provide the engineer with progress reports every 15 days, covering the progress during that period and the total works completed to date. The progress report will indicate:

- Planned progress to date
- Actual progress to date
- Variance between planned progress and actual progress
- Reasons for variance in progress
- Revised work/completion date
- Important issues on which the engineer should be informed

3.4.7. Clearing the site upon completion of works

When the contract works have been completed, the contractor shall at their own expense remove all rubbish, surplus materials and debris, unused material, temporary erections and equipment. The contractor shall make the site and adjoining ground perfectly clean and to the satisfaction of the engineer.

3.5. Technical specifications

3.5.1. General

An existing 394 m AC pipeline delivers water from the dam to a nearby scheme. Water to the proposed 15 ha Nabusenga scheme shall be conveyed by 1 617 m AC pipeline, leading from the existing pipe to the NSR.

Water from the NSR will be distributed within Block 1 through 980 m of canals of 350 mm base width and 725 m of canals of 250 mm base width, and within Block 2 through 600 m of canals of 250 mm base width. The canals shall have gradients of 1:500 and 1:1000 and side slopes of 60°. There are three diversion structures for Block 1 and two for Block 2. Drop structures shall be installed where the existing land slope exceeds the canal gradient. Water-measuring devices shall be installed immediately downstream of the NSR and offtake structure for Block 1 and 2 respectively. One canal crosses the field road and a culvert shall be constructed at that point. The total length of V-shaped drains is estimated to be 1 400 m. The length of the 5 m wide access or perimeter road is 1 600 m. The total length of the 2.5 m wide field roads is 650 m. Saddle bridges will be constructed where the roads cross the drains.

3.5.2. Earthworks

Specifications for earthworks for a surface irrigation scheme refer to:

- Clearing and stripping of pipeline, canal routes and borrow pits
- Excavation of pipeline trench in original ground
- Excavation and earthworks for night storage reservoir
- Earthworks for canals
- Excavation of drains
- Earthworks for roads
- Excavations in borrow pit areas

Clearing and stripping

The contractor should remove all scrub, stumps, roots, bushes and trees from designated areas, such as the area for the night storage reservoir and the canal alignments. The total area that the contractor shall clear and strip is 20 ha. All materials collected should be dried and burned.

Removal of topsoil is necessary for the reservoir, but may not be necessary for the canals, unless the topsoil is unsuitable, for example where it contains organic matter. The engineer should advise on the works to be carried out.

Excavation of pipeline trench

The width of the trench at the depth equivalent to the crown of the pipe should be at least 30 cm greater than the nominal diameter of the pipe. The part of the trench above the crown should be of a convenient width. In areas where there is no road crossing, the minimum recommended cover over the pipe should be at least 60 cm, while for areas under roadways it should be at least 75 cm, in order to avoid the anticipated load damaging the pipe.

The farmers participating in the project shall do all the excavation of trenches. The work shall be carried out under the strict supervision of the engineer. Involving the farmers is intended to make them feel more responsible for their own project and get familiar with the various components, for better operation and maintenance of the scheme later.

Excavation and earthworks for night storage reservoir

The NSR shall have a capacity of 2 000 m^3. It is square in shape and consists of a 168 m long earthen embankment. Its depth is 1.5 m plus a freeboard of 0.5 m. The length and width at the bottom is 34 m. The work shall include the stripping of the foundation, excavation of unsuitable material and excavation of the cut-off trench up to a normal depth of 1.50 m.

The embankments, including the core trench, should be properly compacted, as described under earthworks for canals. Proper bonding of the embankment with the foundation should be ensured. Embankments should be constructed at side slopes given on the design drawings.

Earthworks for canals

Fill material for the canal embankments should be placed in horizontal layers not exceeding 200 mm loose thickness and compacted either manually or with equipment to achieve 95% of the maximum dry density of the material. Regular control testing should be carried out to check the compaction achieved. Proper compaction requires the material to be of the correct moisture content. If the moisture content of fill is above or below that required, the fill should be allowed to dry out or be wetted, after which it should be re-compacted. Completed layers of fill material should be covered by the subsequent layer within 24 hours.

Where necessary, excavations shall be made to alignments and gradients as shown on the design drawings or as directed by the engineer. To achieve this, steel templates shall be used to shape the canals. Excavations shall be made in original ground or in previously placed earthfill embankments. If during excavations the canal embankment is disturbed, it should be re-compacted.

Where excess excavation shall occur, and not for reasons of bad ground, the contractor may opt to make up excavated profile to the specified payment line by hand-tamping selected and moisture conditioned earthfill. The engineer shall first approve the material, which should be of low to medium plasticity.

The 980 m long 350 mm base wide canals in Block 1 have a gradient of 0.1% or 0.001 or 1:1 000 (which is 1 m drop every 1000 m length), while the 725 m long 250 mm base wide canals have a gradient of 0.2% or 0.002 or 1:500 (which is 2 m drop for every 1000 m length or 1 m drop for every 500 m length). The canals in Block 2 have a gradient of 0.2%, a base width of 250 mm and a length of 600 m. As the existing land slope exceeds the proposed canal gradients, a number of drop structures shall be needed. The exact number of drop structures shall be determined during construction based on the profiles.

Excavation of drains

Construction of V-shaped field drains with a minimum depth of 400 mm is required at the lower end of every field. The total length will be 1 400 m. They shall have side slopes of 1:3. Saddle bridges will be constructed, which allow farm implements, people and vehicles to cross the drains easily. The contractor should excavate the drains at almost the same gradients as for the canals.

Earthworks of roads

Construction of 2.5 m x 650 m field roads and 5 m x 1 600 m perimeter roads is required. Most of the material excavated during drain construction shall be used as fill for the roads. The contractor should construct roads with the correct materials, both hard and soft, and with the correct side slope to allow for drainage.

Excavations in borrow pits

The contractor shall obtain materials required for earthworks from approved borrow pits. Both the contractor and the engineer shall agree on the sites. The engineer shall test the material in the proposed borrow pits and shall have the final say on the selected borrow pit. Before opening any borrow pit the contractor shall remove topsoil to a depth of 150 mm.

3.5.3. Concrete works

During the progress of the construction of concrete works, the engineer shall from time to time determine the exact proportions in which the different ingredients are to be mixed. The concrete shall be divided into a number of classes, each designated with a compound reference number. The first number shall specify the normal weight of cement in kg/m^3 of finished concrete while the second number shall specify the maximum size of the aggregate in mm. For example, concrete numbered as 300/20 class means 300 kg/m^3 of cement of finished concrete and maximum aggregate size of 20 mm. The ratio of cement:sand:stone for concrete shall be 1:2:3 corresponding to Grade 15, which is recommended for lining canals (Cement and Concrete Institute, 1986). The cement to water ratio should relate to the one common for the required concrete, but could be determined by trial mixes in case of doubt or unsuitable concrete. The ratio should be within a range of 10% from the required one. For Grade 15 concrete, the cement:water ratio should be 1.45:1.

Canal lining

All the canals shall be concrete-lined to minimize seepage losses. The thickness of the concrete lining shall be as shown on the design drawings or as directed by the engineer. Where a completed section has a thickness less than that specified, it should be removed and replaced. Plastering, or other methods of building up the lining thickness should not be allowed.

Concrete canal linings should be placed in panels of a maximum of 3 m long and be constructed in alternate bays, so that at least 24 hours elapse between the completion of one panel and the start of lining of an adjacent panel. This is in order to maintain uniform spacing for the joints that will be introduced later on.

In forming the concrete (screeding operation) at least three passes with a wooden plank, or any other method chosen by the contractor and approved by the engineer, are necessary in order to maintain the shape and the inside of the canal. After completing the required number of passes, the concrete should immediately be floated (smoothening of the surface with a wooden plank) and troweled to produce the specified finish. Striking off, or removal of any concrete from the consolidated surface by means other than those used in the construction, is not permitted.

Structures

Construction of the following structures is needed:

- Two measuring structures (cut-throat flumes)
- One canal-road crossing
- Five diversion structures, three in area 1 and two in area 2
- Three saddle bridges or drain-road crossings
- Drop structures

Construction of the structures shall be according to details shown on the design drawings and/or as directed by the engineer. The contractor shall ensure that no stagnant pools of water exist at the completed structure, as these are breeding places of mosquitoes and aquatic snails. As an example, details of the cut-throat flume are given below.

Cut-throat flumes shall be installed at the head of the field canals, immediately downstream of the NSR for Block 1 and downstream of the diversion structure for Block 2. The flume will function as a dual measuring and control structure of the water flow in the canals. The flume shall have a length of 2 m and a throat width of 0.16 m and 0.13 m for Block 1 and 2 respectively. The upstream depths shall be 0.40 m and 0.26 m and the downstream depths 0.30 m and 0.20 m for Block 1 and 2 respectively. The contractor shall take notice of the importance of the throat width and a steel angle shall be embedded in concrete at this section to fix the width. More details are given in the design drawing.

Conveyance pipeline

The conveyance line supplying water to the irrigation scheme consists of an existing and a proposed pipeline. The existing pipeline consists of 394 m AC pipes, 225 mm diameter Class 18, leading from the dam. The proposed pipeline consists of 917 m AC pipes, 250 mm diameter Class 6, and 700 m AC pipes, 200 mm diameter Class 6, connecting to the existing pipeline. A GI reducer and related short collar joints shall be needed for the connection. The pipeline crosses the Nabusenga River twice. One crossing is 100 m wide, while the other is 25 m wide. Galvanized Iron (GI) pipes of 250 mm and 200 mm diameter shall be used to cross the river. The 15 m wide gully crossing shall be of 200 mm diameter GI pipes. The GI pipes shall be embedded in concrete on either side of both the river and the gully. GI short collar joints shall be used to connect the GI to AC pipes. Furthermore, two offtake structures will be constructed and five 250 mm sluice valves and two air valves shall be installed.

3.5.4. Land clearing and land preparation

The land clearing and land preparation activities to be carried out by the contractor comprise some or all of the following activities:

- Clear felling
- Stacking and burning
- Ripping and secondary clearing
- Removal of anthills
- Land leveling
- Ploughing

The objective of these activities is to clear the land and to prepare a level field ready for planting with crops.

The costs shall be given on a per hectare basis. The exception might be the leveling of anthills, which would be done on day-works basis. A list of equipment to be used for these activities should be provided by the contractors.

Clear felling

The ground within the scheme area should be cleared of all trees, stumps, roots, shrubs and other objectionable material, as instructed by the engineer, to permit satisfactory performance of the works. The Nabusenga project area is 15 ha net, it has sparse vegetation as the area is presently utilized for dryland cropping. Therefore, the clear felling operation is considered to be relatively light. The clearing shall be done within the boundary lines specified by the engineer, no trees shall be cut outside the designated area.

Stacking and burning

After felling, all woody plant material, scrub, brushwood, stumps and roots shall be gathered into piles or windrows for burning. The contractor shall be responsible for the burning of all vegetative matter so stacked. The construction of windrows or stacks shall be carried out in such a manner as to minimize burning areas. All unburned plant material and other material shall be removed from the delineated clearing area and deposited outside the perimeter line, in selected places and in a manner approved by the engineer. Alternatively, farmers may opt to save the wood for home use. In this case, they should collect the wood from the specified area within a set time mutually agreed upon by the contractor and the engineer, in order to avoid disruptions to the contractor.

Ripping and secondary clearing

After the land has been cleared of all bush, the area should be ripped to a depth of not less than 350 mm. The objective should be to remove and bring to the surface all stumps and roots that were not removed by the felling process. During the secondary cleaning, all uprooted plant material should be gathered and burnt or removed from the project site.

Anthill removal

Anthills should be demolished before land levelling and the work should be carried out on a day-works basis. The anthills should be reduced to the surrounding ground level and all material spread evenly around the original site or deposited in nearby depressions.

Land levelling

After the removal of anthills, all land should be levelled in sections delineated by the canals or other boundaries. The 'Plane method' was used to calculate the cut and fill. Generally, more cut than fill shall be required, as disturbed soil has reduced density that will settle in time to below the calculated fill elevations. The total volumes of cut and fill are approximately 7 195 m^3 and 5 736 m^3 respectively. The resultant furrow gradient shall be 0.5% and the direction of furrows as indicated on the design drawings. Land levelling operations shall be carried out using a motorized grader, and finally with a land plane. Removal of soil should be limited to not more than 100 mm of topsoil per cut.

Ploughing

The cleared area of 15 ha net should be ploughed to a depth of not less than 250 mm with a disc plough. The resultant tilth should be that of seedbed ready for planting.

3.6. Bill of Quantities

Tables 2 and 3 are BOQs prepared for the Nabusenga surface irrigation scheme.

The tenderer should also provide a schedule for equipment hire charges for day-works, including the type of equipment and hire rate. An example is given in Table 4.

Table 2
Bill of Quantities for concrete and form works operations for canal lining

Item no.	Description	Number or quantity	Unit	Unit rate or price	Total amount
1	Blinding concrete under structure slabs, etc., as ordered, class 300/20	10	m^3		
2	Outlet pipe encasement concrete, class 330/20	20	m^3		
3	Canal lining concrete, class 330/20, including compaction:				
	a. unreinforced	475	m^3		
	b. reinforced	25	m^3		
4	Screeding and finishing canal	9 500	m^2		
5	Miscellaneous concrete class 330/20 for structures:				
	a. Less than 1 m^3	10	m^3		
	b. Greater than 1 m^3	45	m^3		
6	Addition to or deduction from all concrete rates for increase or decrease in cement content per m^3	100	10 kg/m^3		
7	Manufacturing and placing precast concrete 360/20, including all form work	50	m^3		
8	Cutting out sample section and replacing with concrete	10	No.		
	Total Part 2: Concrete and form work operations to be carried forward to summary				

Table 3
Bill of Quantities for land clearing and preparation

Item no.	Description	Number or quantity	Unit	Unit rate or price	Total amount
1	Clear felling area	15	ha		
2	Stacking and burning	15	ha		
3	Secondary clearing	15	ha		
4	Ripping	15	ha		
5	Land levelling	15	ha		
6	Ploughing	15	ha		
7	Removal of anthills with D6 or equivalent	20	hrs		
	Total Part 1: Land clearing and preparation to be carried forward to summary				

Table 4
Example of schedule for equipment hire charges

Description	Type, size or mark number	Hire rate (ZW$)	Unit
Dozer			per kW per hour
Grader			per kW per hour
Scraper			per kW per hour
Front end loader			per kW per hour
Excavator			per kW per hour
Water bowser			per m^3 per hour
Tipper			per m^3 per hour
Compactor			per T per hour
Tractor			per hp per hour
Compressor			per cfm per hour
Concrete mixer			per 1 per hour

Chapter 4

An example of the preparation of a tender document for the construction of a drag-hose sprinkler irrigation scheme for smallholders

This chapter provides an example of *Special conditions* and *Technical specifications* that were prepared for the construction of a drag-hose sprinkler irrigation scheme for smallholders in Zimbabwe, called "Bonde (Block A) smallholder irrigation scheme".

4.1. Background and access to the scheme

The project lies on the right bank of Bonde river in Chamutsa Ward, Buhera District, Manicaland Province, as shown on BO.01 (Figure 7). The scheme is approximately 14 km from Birchenough Bridge. It is a smallholder irrigation scheme of 600 hectares, to be developed in phases. The second phase is the construction of Block A (160 ha), for which this tender document was prepared.

The water supply for the proposed irrigation scheme will be released from Ruti Dam and abstracted at an existing pick-up weir on the Deure river, from where it will be pumped uphill through a 3.6 km pressure main to a high point. From there the water is conveyed by a 6.1 km canal, partly becoming a siphon feeding Block B of the irrigation scheme, and ending in a night storage reservoir (NSR), which is sited on the right bank of the Bonde river below which Block A is situated.

A feeder pipeline for Blocks A, C1 and C2 starts from the NSR. A pipeline feeding Block A branches off before crossing the Deure river. The feeder pipeline for Blocks C1 and C2 branches at the distribution box into the pipelines for the two respective blocks.

This document covers the works to be implemented after the valve outlets of the supply line to Block A, which is the second phase of construction.

4.2. Contract drawings

Part of the works are shown on the following contract drawings (Agritex, 1993):

- BO.01: Location map (Figure 7)
- BO.02: Layout of the sub-block A1 (Figure 8)
- BO.15: Connection of gate valves, 2 inch or less, to a lateral pipeline (Figure 9a)
- BO.16: Drain valve and manhole (Figure 9b)
- BO.17: Brass garden tap connected to a galvanized riser and lateral pipe (Figure 9c)
- BO.18: Sprinkler mounted on steel risers supported by tripods (Figure 9d)
- BO.19: Twin gate valve assembly for CI valves (Figure 10a)
- BO.20: CI gate valve, 3 inch and above, and valve chamber (Figure 10b)
- BO.21: Section through a CI gate valve and chamber (Figure 10c)
- BO.22: Position of gate valves controlling flow into lateral pipelines (Figure 10d)

4.3. General irrigation scheme layout

The scheme consists of four sub-blocks, each made up of 40 fields of one hectare each. Each sub-block is served by a separate pumping station. The four pumping stations are served by one supply line (suction) from the NSR and pump into four separate main lines serving their respective sub-blocks.

From each of the four main pipelines, secondary pipelines of various sizes and lengths supply the lateral pipelines through valve assemblies shown in drawing BO.15 (Figure 9a). At 12 m intervals, Galvanized Iron (GI) riser pipes bearing garden taps are installed, as shown in drawing BO.17 (Figure 9c).

From the garden taps water will be supplied to the sprinklers through 20 mm hoses, seven bar pressure rated. The sprinklers are mounted on GI riser pipes supported by tripods, as shown in drawing BO.18 (Figure 9d).

Figure 7

Location map of the Bonde drag-hose sprinkler irrigation scheme (BO/13)

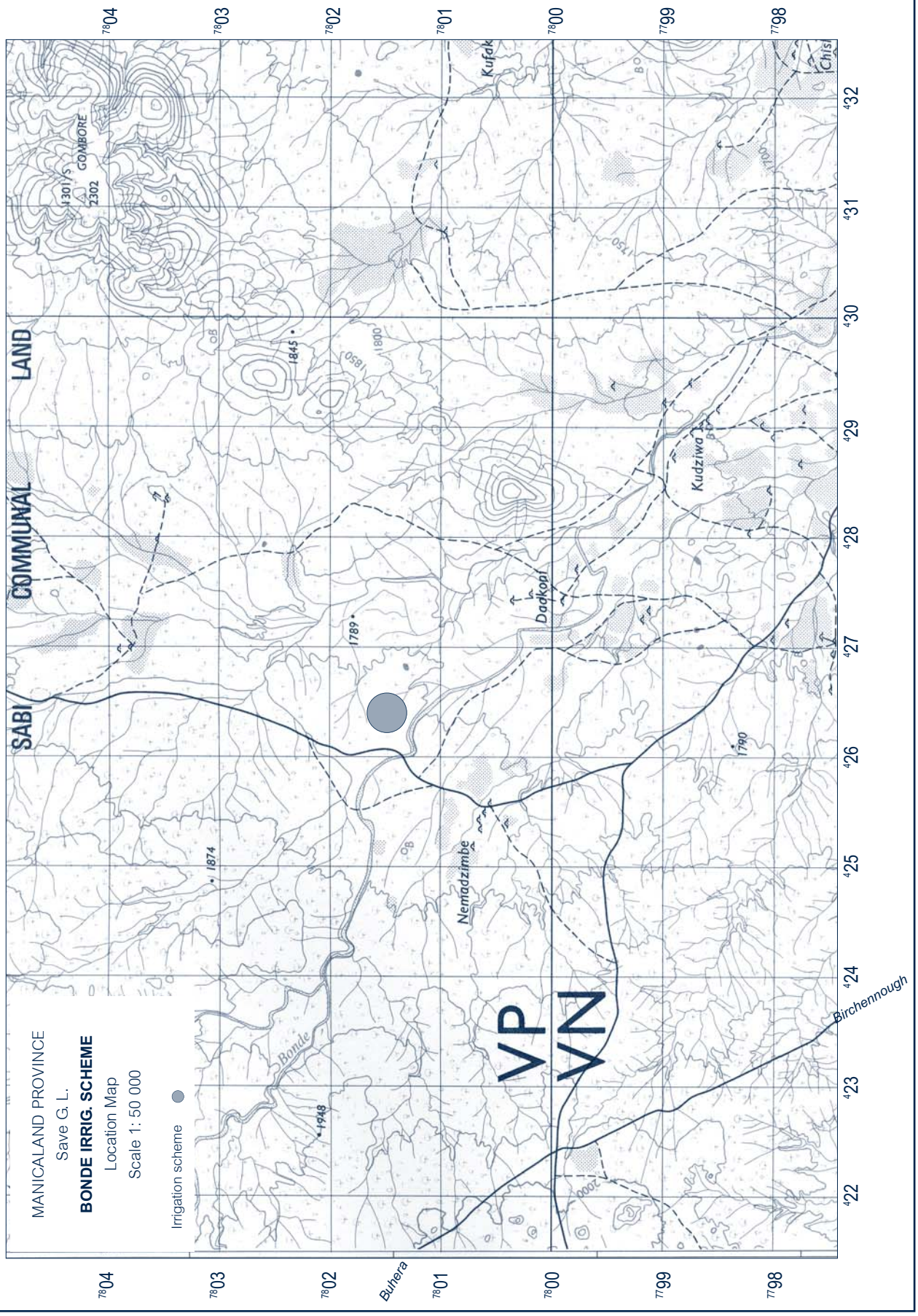

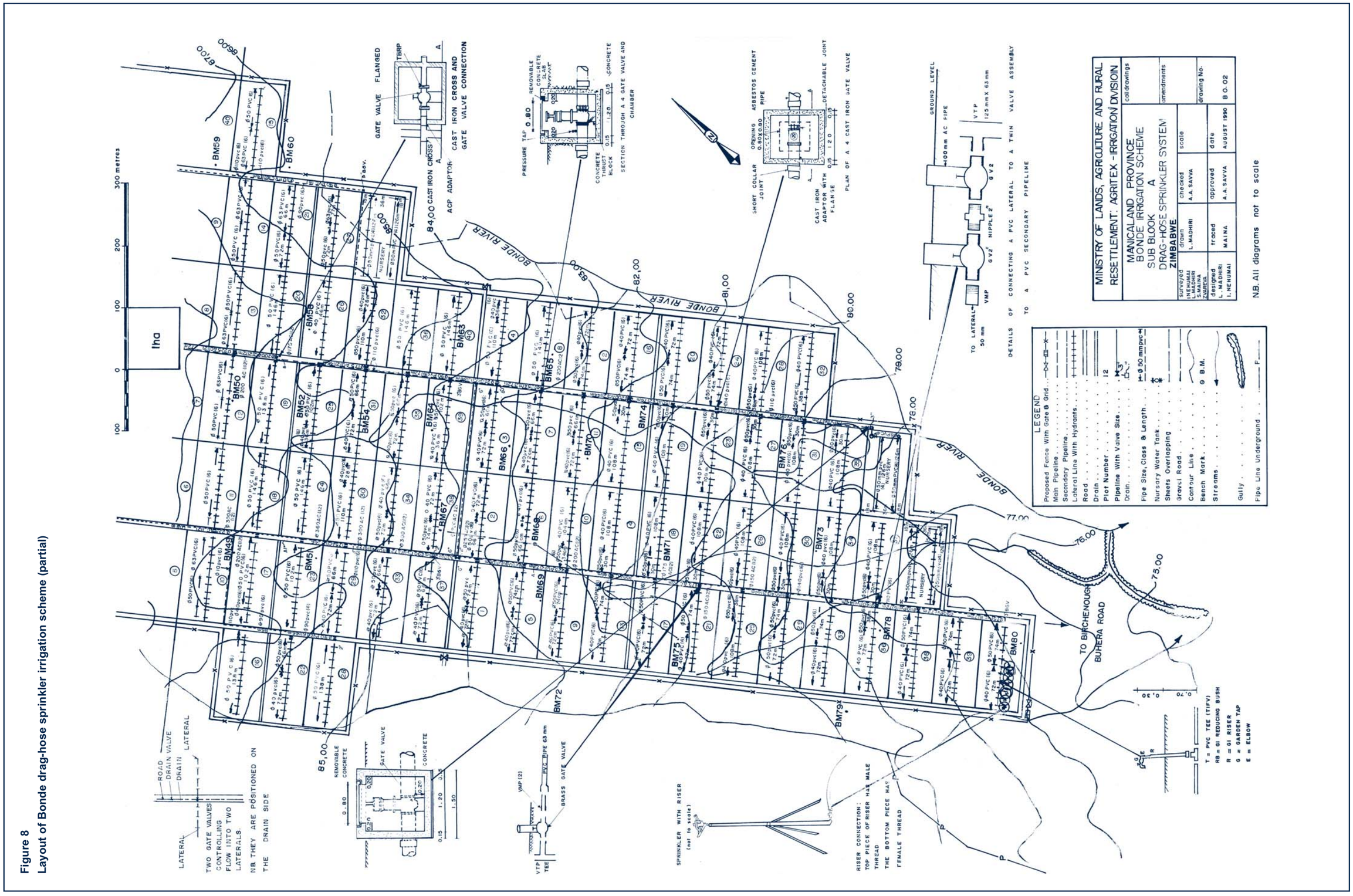

Figure 8
Layout of Bonde drag-hose sprinkler irrigation scheme (partial)

Figure 9

Drawings BO.15, BO.16, BO.17 and BO.18 indexed in the tender document as part of the drag-hose irrigation scheme tender specifications

Figure 9a

DRAWING NO. BO.15

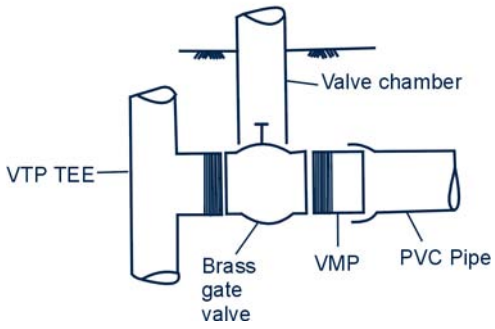

Figure 9b

DRAWING NO. BO.16

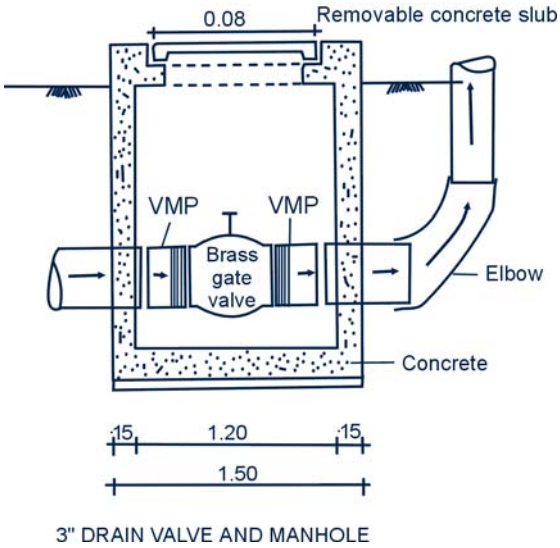

Figure 9c

DRAWING NO. BO.17

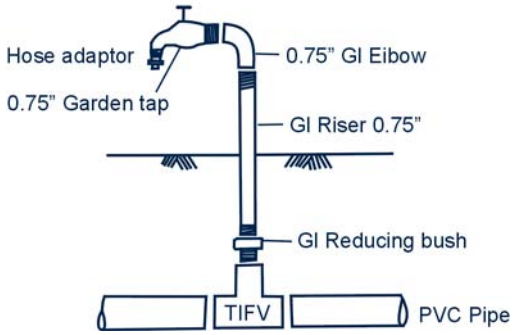

Figure 9d

DRAWING NO. BO.18

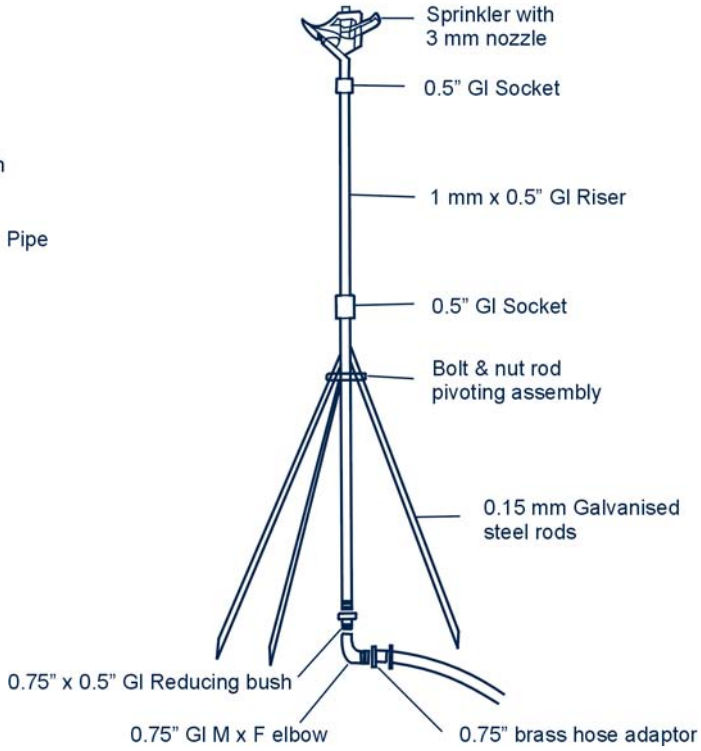

Figure 10

Drawings BO.19, BO.20, BO.21 and BO.22 indexed in the tender document as part of the drag-hose irrigation scheme tender specifications

Figure 10a

DRAWING NO. BO.19

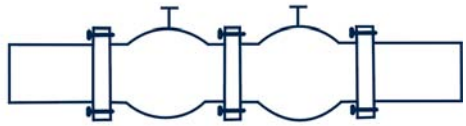

DETAILS OF TWO CAST IRON VALVES

Figure 10b

DRAWING NO. BO.20

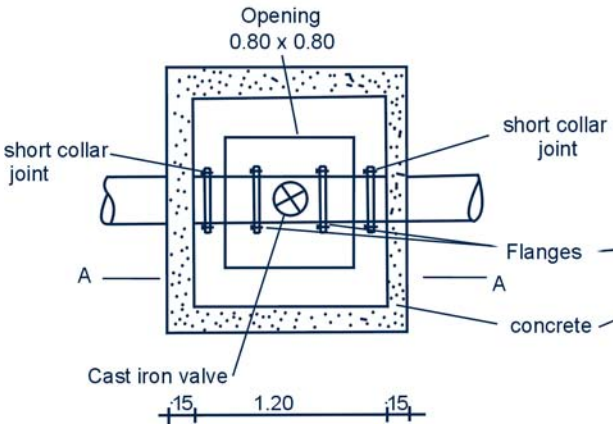

Figure 10c

DRAWING NO. BO.21

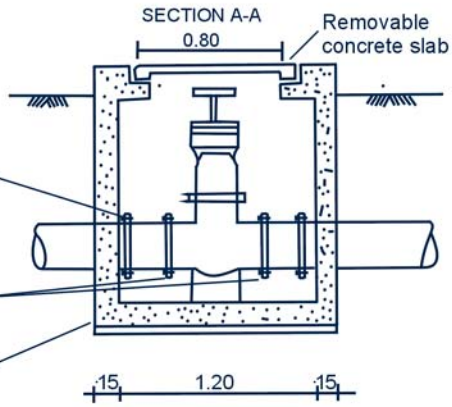

SECTION THROUGH A 4 GATE VALVE & CHAMBER

Figure 10d

DRAWING NO. BO.22

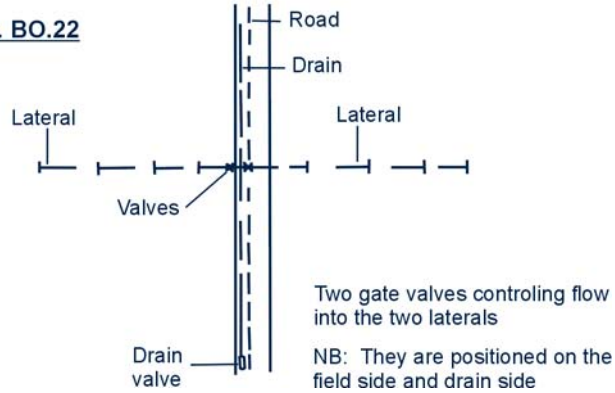

4.4. Special conditions

4.4.1. Materials

The scheme shall be constructed using Asbestos Cement (AC) and uPVC pipes, 6 inch (150 mm), 4 inch (100 mm) and 3 inch (75 mm), Cast Iron (CI) gate valves, 3 inch, 2 inch and 1½ inch brass gate valves, AC and uPVC fittings, sprinklers, and other fittings. The pipes and fittings shall be of the type specified, as included in the BOQ or shown on the drawings.

Except where otherwise stated or approved by the engineer, all materials used in the works shall be of the best quality of their respective kinds, as specified or described in the specifications, and the drawings and shall comply wherever possible with the current issue of the appropriate standards of the Standard Association of Zimbabwe, the British Standard Institution ISO or other approved equivalent international standard as noted herein or approved by the engineer.

All materials and equipment needed for the system shall be new, without flaws or defects and of quality and performance as specified and shall meet the requirements of the system.

Whenever any material is specified by name or number thereof, such specification shall be deemed to be used for the purpose of facilitating a description and establishing quality of the material and shall be deemed and construed to be followed by the words 'or approved equivalent'.

All materials and equipment included in the works of the irrigation scheme shall be guaranteed by the tenderer against all defects of materials, equipment and workmanship for a period of one year from the date of acceptance of the irrigation system.

4.4.2. Procurement, packing and delivery

The uPVC pipes shall be provided to the contractors by the client, all other materials and equipment shall be provided by the contractor unless otherwise stated herein.

Transportation of all materials and equipment for the construction of the irrigation scheme to the project site shall be the responsibility of the contractor. The uPVC pipes shall be collected from the client's stores as and when advised by the engineer. Once the materials and equipment have been offloaded at the project site, careful examination of the materials and equipment for damage, etc., shall be done by both the contractor and the engineer or their representative staff.

The contractor shall take all care to avoid damage to pipes, fittings and specials during transportation to the site of the works. Pipes in transit shall be well secured and supported over their entire length and not allowed to project over the tailboard of the transporting vehicle. Pipes shall not be dropped or thrown to the ground and impact with other pipes or solid objects shall be avoided. uPVC pipes of any diameter and AC pipes of up to 100 mm nominal bore may be lifted by hand using skids. AC pipes of 150 mm and over shall be lifted using skids and ropes. All fittings shall be handled with care to avoid damage. They shall not be thrown, dropped or subjected to impact with other objects.

4.4.3. Storage of materials and equipment on the site

The contractor shall take all reasonable care to avoid any damage to the pipes, fittings and specials during storage and subsequent handling, laying and jointing and the manufacturer's instruction in this regard shall be strictly adhered to. Particular care should be taken to ensure that no damage occurs to the ends of pipes and fittings to avoid subsequent problems of joining.

Storage areas or sheds shall be in accordance with the manufacturer's recommendations and subject to the approval by the engineer. They shall be level and clear of stones. Timber bearers of uniform size shall be placed under the bottom rows of pipes in a stack at intervals of 800 mm. No stack of uPVC pipes shall be more than 2.5 m high. All storage areas shall be secure from pilfering or theft. Shade covers shall be provided for stacks of uPVC pipes and fittings to prevent their exposure to the direct rays of the sun at all times. AC pipe couplings shall be stored lying flat and precautions taken to prevent damage to the sealing ring area. Rubber seal rings for AC pipes, gaskets, jointing materials for pipes and fittings shall be stored under cover, protected from direct rays of the sun and away from grease and oil.

The contractor shall be deemed responsible for any deterioration of the materials and therefore for the replacement thereof.

4.4.4. Working drawings and As built or Record drawings

The design drawings included in the tender documents are diagrammatic. The contractor should verify these as per actual field situation and should prepare *Working drawings* with all required details to assist in implementing the works properly and accurately. The engineer will approve such working drawings before being implemented.

The contractor will update the working drawings on a daily basis as per the actual situation in the field. The engineer should approve any modifications, big or small. These drawings, which show the actual field situation and the system as it is built, will be the basis for preparing the *As built drawings* or *Record drawings*. The contractor will submit two copies on a reproducible form (tracing) of the *As built drawings* to the engineer, within a month of commissioning the system.

4.4.5. Trenching and back-filling

Casual workers and the farmers participating in the project shall carry out the excavation of trenches, under strict supervision from personnel designated by the client. Placement of all AC and uPVC pipes along the trenches shall be done after completion of trench excavations. Casual workers and the farmers participating in the project shall do the back-filling work.

In addition to the trenching and back-filling works, the client shall provide the contractor with a number of farmers to be used during the construction on the site as unskilled labourers. The involvement of the farmers is intended to make the farmers feel more responsible for their own project. The contractor shall specify the number of unskilled labourers required.

4.4.6. Pipe laying

AC pipes

No pipes shall be laid without the engineer's approval to do so for that section of works. The AC pipes shall be laid in accordance with the manufacturer's instructions. Before laying each pipe and coupling, it shall be inspected to ensure that no damaged item be laid in the line. Pipes with chipped ends shall be carefully examined for hair cracks by moistening the damaged end of the pipe with paraffin and by visual inspection. Any damaged item shall be put aside for possible repair and later use.

When laying is about to commence, the sealer rings shall be fitted into the joint couplings. The grooves in the couplings are to be thoroughly cleaned and the rings inserted with the cavities facing towards the centre of the joint. The inside of the pipe shall then be checked for cleanliness and any dirt or debris removed. The coupling shall be fitted by sliding it into the spigot end of the pipe until it is stopped by the centre rubber. This may be done by hand or by placing a timber batten across the coupling face and using a crowbar in such a way as to avoid damaging the coupling or pipe.

After the joint has been assembled, the pipe shall be lowered into the trench with the attached coupling facing in the direction of lay. The joint with the adjacent pipe shall then be made by sliding the spigot end into the previously laid pipe with the aid of timber battens and crowbars. Particular attention shall be paid to ensuring that the pipe is supported at all times along its barrel and that at no stage it is supported on the joint coupling.

uPVC pipes

No pipes shall be laid until the engineer's approval to do so has been obtained for the section or the works. The uPVC pipes shall be laid strictly in accordance with the manufacturer's instructions. Before laying each pipe or fitting, it shall be inspected to ensure that no damaged item be installed in the line. Any item found to be damaged shall be put aside for possible repair and later use, in the case of a pipe, as a make up piece. Any burrs and sharp ends shall be smoothened with a rasp to facilitate jointing.

When laying is about to commence, both ends to be joined shall be cleaned to remove dirt, soil, grit, oil or grease. The inside of the socket and the outside of the spigot shall be lightly sand-papered. The uPVC shall be cut with a handsaw or other equivalent means in such a manner as to ensure a square (straight) cut. Burrs at the ends shall be removed prior to installation so that a smooth unobstructed flow will be obtained.

All uPVC to metal joints shall be made with adapters of the same basic materials as the uPVC pipes, wherever possible. The solvent recommended by manufacturer shall be used. The solvent-weld joints shall be made in the following manner:

a) Thoroughly clean the mating pipe

b) Apply a uniform coat of solvent to the outside of the pipe

c) Apply solvent to the fitting in a similar manner

d) Reapply a light coat of solvent to the pipe and quickly insert it into the fitting

e) Give the pipe or fitting a quarter turn to ensure even distribution of the solvent and make sure that the pipe is inserted to full depth of the fitting socket

f) Hold in position for 15 seconds

g) Wipe off excess solvent that appears at the outer shoulder of the fitting

Care should be taken not to use excess amounts of solvent. The joints should be allowed to set for at least 24 hours before pressure is applied to the system.

Pipes shall be laid true to the lines, with the socket facing in the direction of lay. The joint with the adjacent pipe shall then be made by sliding the spigot end into the previously laid pipe.

4.4.7. Keeping pipelines clean

Every reasonable precaution shall be taken to prevent entry of any foreign matter and water into the pipes. At the end of each day's work, or at any time when work is suspended for a significant period, the last laid section of each pipeline shall be plugged, capped or otherwise tightly closed with a cloth or plastic sheet until laying recommences.

4.4.8. Flushing

After all pipes, gate valves and lateral pipelines are in position and connected to a given section and all necessary division work has been completed, but prior to the connection of the sprinklers to the system, all valves should be opened and the full head of water should be used to flush out the system.

4.4.9. Pressure testing

After the completion of the installation of the sprinkler system and after flushing, the whole system shall be pressure-tested for up to twelve hours and in the presence of the engineer. All joints of pipes and fittings shall remain uncovered during the testing. Any major breakdown, requiring shutdown, shall cause the test to be repeated.

The procedure to be followed for testing the mainline is as follows:

a) Back-fill partially the pipes to be tested, leaving the sockets uncovered; all joints and connection points to be left uncovered for leakage inspection

b) Flush the mainline with water in order to get rid of soil and other dirt

c) Open the valves to remove any entrapped air

d) Pump pressurize the line to normal operating pressure

e) Leave the system pressurized for up to 12 hours

f) Check for leakages; any drop of pressure, even of small value, is the result of a leakage

g) Repair the leakage and leave the system for 24 hours if solvent-welding was used for repairs

h) Repeat the pressure test

During the testing, the contractor shall set the pressure in the system by adjusting the gate valves at the head of the secondary pipelines so that optimum sprinkler pressure is achieved. The wheel of the setting valve shall be removed after setting optimum pressure. Should any pipeline fail to operate within the specified operating range, the contractor shall investigate the causes of such failure, report the results to the engineer and undertake such remedial work as the engineer may direct. Should such failure be the result of an error in the engineer's design, the cost of such remedial work shall be borne by the client. Otherwise it shall be at contractor's own expense.

4.4.10. Timing/Scheduling of works

The contractor shall present in their tender a schedule of all activities for completing the scheme. Among other things, the contractor will state the delivery time of all the materials to site. The contractor shall be penalized for failure to complete the tendered works as stated under the general conditions.

Upon the testing and acceptance of the system, and within the warranty period of 12 months, the contractor shall repair any reported faulty equipment and breakages within three (3) days. If the contractor does not respond within the specified time, the client carries out the repairs, the cost of which is deducted from the 10% retention.

4.4.11. Workmanship

All workmanship shall be of the best quality appropriate to each category of work.

4.4.12. Variation order

Changes in construction, which were not envisaged in the design stages or at the time of acceptance of the tender but are necessary for the proper operation of the system, can be made upon the instruction of the engineer in writing. There has to be a written response from the contractor, stating the costs of such changes. Upon approval by the engineer, the contractor can commence or continue with construction of the necessary works.

4.4.13. Progress reports

The contractor shall provide the engineer with progress reports every 15 days, covering the progress during that period and the total works completed to date. The progress report will indicate:

- Planned progress to date
- Actual progress to date
- Variance between planned progress and actual progress
- Reasons for variance in progress
- Revised work/completion date
- Important issues on which the engineer should be informed

4.4.14. Clearing the site upon completion of works

When the contract works have been completed, the contractor shall at their own expense remove all rubbish, surplus materials and debris, unused material, temporary erections and equipment. The contractor shall make the site and adjoining ground perfectly clean and to the satisfaction of the engineer.

4.5. Technical specifications

4.5.1. General

The four sub-blocks are served by four separate mainlines:

- The main pipeline serving sub-block A1 consists of 130 m of 300 mm AC (12) pipe, reducing to a 250 mm AC (12) pipe over the remaining 512 m
- The main pipeline serving sub-block A2 consists of 156 m of 300 mm AC (12) pipe, reducing to a 250 mm AC (12) pipe for the remaining 296 m
- The main pipeline serving sub-block A3 consists of 326 m of 300 mm AC (12) pipe, reducing to a 250 mm AC (12) pipe for the remaining 296 m
- The main pipeline serving sub-block A4 consists of 566 m of 300 mm AC (12) pipe, reducing to a 250 mm AC (12) pipe for the remaining 288 m

From the four main pipelines serving the four sub-blocks, are secondary pipelines of various sizes and lengths of AC and uPVC branch. These secondary pipelines supply the lateral pipelines through valve assemblies. At 12 m intervals GI risers bearing ¾ inch brass garden taps are installed, as shown in drawing BO.17 (Figure 9c.)

Water will be supplied through 32 m long hoses, 20 mm in diameter and seven bar pressure rated, to sprinklers which are mounted on GI risers supported by tripods, as shown in drawing BO.18 (Figure 9d.)

4.5.2. Materials and equipment

Pipe work and fittings

AC pipes and fittings

Each length of pipe shall bear markings identifying the size, type and pressure rating of the pipe. Each 4 m length shall be fitted with two rubber sealing rings installed as specified by the manufacturer. Both the pipes and joints shall show no manufacturing defects or transport damage. All AC pipes and fittings shall be provided by the contractor and be fitted as shown on tender drawings.

uPVC pipes and fittings

All uPVC pipes and fittings shall be polyvinyl chloride semi-rigid. The sizes and working pressure ratings shall be as shown on the tender drawings. All pipes shall be solvent-weld and will be supplied by the client in the length of 6 m and at appropriate sizes and pressure ratings. uPVC pipes and fittings exposed to the sun should be painted with suitable sunray protection material.

Each length of pipe shall bear markings identifying the size, type and pressure rating. The pipes shall be smooth finished both inside and outside and bear no evidence of interior scratches, grooves, or any other manufacturing or handling damage. The inside shall show no evidence of blisters, grooves or other extrusion marks. All uPVC fittings shall be of the same basic material of the uPVC. Thrust blocks have to be placed at all points where the pipeline changes direction (elbows, tees, etc.).

Water (garden) taps on risers

Water (garden) taps shall be brass and ¾ inch in diameter and equipped with ¾ inch brass hose adapters. These will be connected to a 1.0 m GI riser through a GI elbow, as shown in drawing BO.17 (Figure 9c.) The contractor shall provide all the water taps.

Hoses

The hoses to be used for this irrigation system shall be 32 m long, 20 mm in diameter, reinforced and seven bar pressure rated. Joining of two or more hoses to form a 32 m length shall not be acceptable. The client shall provide all hoses.

Risers and tripods

The risers shall be ½ inch in diameter of galvanized steel (GS) pipe provided in two sections of one metre, each connected through a ½ inch GS socket. At 60-80 mm below the socket, three steel plates of about 2.5 mm wide shall be bent and welded to the riser. Holes at the end of each bent plate shall allow the use of bolts and nuts to connect the three legs with which to construct the tripod. A solid steel cross can be used instead of the bent plates. Each leg shall be made of a GS rod of 15 mm diameter. At about 65 mm from the top, a hole shall be drilled to each leg for connection to the place by bolt and nut, to make arrangement allowing opening, closing and adjustment of the tripod.

Each leg shall be bent at the end so that when it is firmly pushed in the ground the elbow, at the bottom of the riser, shall rest on the ground. All parts of the tripod and riser shall be galvanized, as shown in drawing BO.18 (Figure 9d).

The 20 mm hose shall be connected to the riser of the tripod through a 20 mm brass hose adapter and clip. The contractor shall supply the riser and tripods.

4.5.3. Sprinklers

All sprinklers shall be mounted on risers, supported by tripods as shown in drawing BO.18 (Figure 9d). The full circle impact sprinklers shall be capable of covering a wetted diameter of at least 24.0 m with a discharge of 0.63-0.68 m^3/hr at 3.0 bar (300 kPa) through a 3-3.2 mm diameter nozzle. All sprinklers shall be of the same speed of revolution. A maximum deviation of 5% from the mean speed of revolution can be accepted. The contractor shall supply the sprinklers. The sprinkler performance table should be submitted with the tender.

4.5.4. Gate valves

The position of each gate valve required is shown on the design map. All gate valves are 3 inch in diameter and above (except for the drain valves) and shall be of cast iron body and flanged. Gate valves up to 3 inch in diameter (including 3 inch drain valves) shall be of brass body with a hand wheel double disc parallel seat and bronze ring stem. The internal parts of the gate valve shall be removable without disconnecting the body from the pipe system. All gate valves shall be installed underground. All gate valves connected to the lateral pipelines shall be positioned on the field site, as shown in drawing BO.22 (Figure 10d).

4.5.5. Spares and tools

The contractor is required to provide the following spares and tools:

- 160 sprinklers
- 4 sets of tools for repairing sprinklers
- 8 extra gate valves of each size fitted on the system
- 160 water taps with hose adapters
- 160 hose adapters
- 2 hand saws and 20 blades
- 160 hose clips
- 2 sets each of the following: screwdrivers, pipe ranges, spanners necessary for the sizes used during fitting of the system

4.5.6. Pressure gauges

The contractor shall provide glycerin-filled pressure gauges of 2.5 inch face diameter. Those installed on the pipe network will have an installation adapter and will register pressures ranging from 0-10 bars. Portable pressure gauges shall be provided with male adapters and shall register pressure ranging from 0-5 bars.

4.5.7. Valve chambers

Manholes or valve chambers for 3 inch and 4 inch gate valves shall be built to the detail shown in drawing BO.20 (Figure 10b) and BO.21 (Figure 10c) respectively. The drain valve chambers are required at each end of a secondary pipeline.

The walls of the manholes and drain valve chambers shall be constructed using bricks and mortar of approved quality. The bricks shall be well soaked in water immediately before being laid and the course of the bricks laid shall be well wetted before fresh bricks are laid upon it. The manhole and the drain valve chambers shall be 1.5 m^2 and 1.2 m deep, leaving 0.2 m extending above ground level. The chamber shall have a 0.8 m^2 removable slab on top. Exposed external faces of brickwork shall be rendered with a 10 mm thick (1 part cement to 3 parts sand) plaster to 150 mm below ground level. Mortar for brickwork and plaster shall be composed of one part of ordinary Portland cement (PC 15) to three parts of sand as specified herein.

The design calls for drain valves in chambers at the end of all the secondary pipelines serving the four sub-blocks A1, A2, A3 and A4. Bricks for manholes (chambers) shall be burnt-clay building bricks to CAS 221 and all building materials shall be provided by the contractor. The valve chambers for the 1 ½ inch brass gate valves controlling the supply to the laterals should be made of one metre long PVC pipe, 110 mm in diameter and Class 4.

4.5.8. Valve keys

In order to operate the gate valves installed underground, four valve keys shall be required for each of the valve sizes installed in the system. Each valve key shall have a stem of 1.5 m length made of GI pipe with a diameter of 25 mm and a 0.5 m long handle of the same size connected to the stem in T-form. The lower end of the stem should form a two-prong fork, which fits on the gate valve.

4.5.9. Pumping station

Of the four pump houses required, two have already been constructed. Therefore the tenderers are required to quote for two houses, as specified in drawing BO.23. The contractor is also required to construct the foundation of each pumping unit, as specified in drawing BO.24.

The reader is referred to Figure 11 ans 12 showing the constructed pump house and pumping unit respectively.

Figure 11
Completed pump house at Bonde irrigation scheme

Figure 12
Completed pumping unit at Bonde irrigation scheme

All four pump houses need to be fully equipped with five pumping units and motors each. All electrical works, including the panels, the power correction units as well as the connection to the National Supply lines, should be included in the tenderer's offer. The foundation requirements of each of the pumps are specified in drawing BO.24. The layout of the pumps and motors in each pump house is specified in drawing BO.23.

Each pumping unit should be provided with isolation valves, both at the suction and delivery points, air valve, non-return valve and glycerin-filled pressure gauge at delivery. Each unit should be capable of delivering 75 m^3/hr at a head of 39 m with the highest possible efficiency. Quality and performance of the pump should conform to a national or international standard, such as ISO 5548-1973.

The pump will be directly driven by an electric motor. The electric panel should have an enclosure containing all electrical wiring and controls. The panel will also include, in addition to the starter and reset button, a voltmeter, ammeter, low pressure cut-out switch, earthing and protection against lightning and steel roof for weather protection. The contractor will verify with the national electricity authority company the capacity of the existing transformer and its ability to take the load of the required pumping unit. The contractor should perform all connections and installations of the cable from the transformer to the pumping unit.

4.5.10. Concrete works

The cement used throughout the works shall be normal Portland Cement 15, obtained from approved manufacturers, and shall comply with the Central African Standard No. A. 46:1972 "Portland Cement". All the aggregates for use in concrete shall conform in all respects with the requirements of the Central African Standard No. 223:1978 "Aggregates from natural sources for concrete". The sand for concrete, mortar or plaster shall be clean and free from clay, silt, chemical salts and organic matter. The sand for use in mortar and plastering shall conform in all respects with the British Standards BS1198-1200 "Building standards for natural sources". Clean fresh water shall be used for mixing all concrete and mortar.

In all works that involve the use of concrete, the concrete shall be protected during the first stage of hardening from harmful effects of sunshine, drying winds and running water. A layer of absorbent material covering the concrete shall be kept constantly moist by spraying it with water, as necessary, for two weeks, or such periods as may be recommended by the engineer.

4.5.11. Nurseries

The design calls for the establishment of six nursery areas to be irrigated using a 50 m^3 water tank for each nursery area connected to the water taps by uPVC buried pipes. For each nursery area, one hose per lateral pipeline shall be required and shall be provided by the contractor. The contractor will construct the 50 m^3 water tanks and provide the risers and water taps as well as the fittings. The employer will provide uPVC pipes, uPVC fittings and garden hoses.

4.6. Bill of Quantities

Table 5 is the BOQ for the Bonde smallholder drag-hose sprinkler irrigation scheme.

Table 5

Bill of Quantities for the Bonde smallholder drag-hose sprinkler irrigation scheme

Item		Quantity	Unit	Unit cost	Total cost
1. PVC and AC piping					
1.1.	PVC pipe, 50 mm class 6	756	m		
1.2.	PVC pipe, 40 mm class 6	1 824	m		
1.3.	AC pipe, 300 mm class 12	1 120	m		
1.4.	AC pipe, 250 mm class 12	2 576	m		
1.5.	AC pipe, 225 mm class 12	512	m		
1.6.	AC pipe, 200 mm class 12	1 088	m		
1.7.	AC pipe, 175 mm class 12	652	m		
1.8.	AC pipe, 150 mm class 12	1 036	m		
2. Fittings					
2.1.	Cast iron elbow 90°, 300 mm diameter	2	each		
2.1.	Steel elbow 90°, 250 mm diameter P1 x 6 inch F2	3	each		
2.2.	Cast iron elbow 90°, 250 mm diameter	2	each		
2.3.	Cast iron elbow 90°, 150 mm diameter	2	each		
2.4.	Steel elbow 90°, 150 mm diameter P x 3 inch F	1	each		
2.5.	Short collar joints, 300 mm diameter	10	each		
2.6.	Short collar joints, 250 mm diameter	41	each		
2.7.	Short collar joints, 225 mm diameter	17	each		
2.8.	Short collar joints, 200 mm diameter	28	each		
2.9.	Short collar joints, 175 mm diameter	18	each		
2.10.	Short collar joints, 150 mm diameter	20	each		
2.11.	Steel tee, 300 mm diameter P x 6 inch F x 6 inch	4	each		
2.12.	Steel tee, 300 mm diameter P x 6 inch F x 250 mm P	1	each		
2.13.	Steel tee, 250 mm diameter P x 1.5 inch T3 x 250 mm P	2	each		
2.14.	Steel tee, 250 mm diameter P x 1.5 inch T x 200 mm P	1	each		
2.15.	Steel tee, 200 mm diameter P x 1.5 inch T x 200 mm P	1	each		
2.16.	Steel tee, 200 mm diameter P x 6 inch F x 4 inch F	1	each		
2.17.	Steel tee, 225 mm diameter P x 4 inch F x 150 mm P	1	each		
2.18.	Steel tee, 225 mm diameter P x 2 inch F x 200 mm P	1	each		
2.19.	Steel tee, 150 mm diameter P x 1.5 inch T x 4 inch F	3	each		
2.20.	Steel tee, 150 mm diameter P x 1.5 inch T x 150 mm P	1	each		
2.21.	Steel cross, 250 mm P x 1.5 inch T x 250 mm P x 1.5 inch T	6	each		
2.22.	Steel cross, 250 mm P x 1.5 inch T x 225 mm P x 1.5 inch T	4	each		
2.23.	Steel cross, 250 mm P x 1.5 inch T x 200 mm P x 1.5 inch T	2	each		
2.24.	Steel cross, 225 mm P x 1.5 inch T x 225 mm P x 1.5 inch T	3	each		
2.25.	Steel cross, 225 mm P x 1.5 inch T x 200 mm P x 1.5 inch T	3	each		
2.26.	Steel cross, 200 mm P x 1.5 inch T x 200 mm P x 1.5 inch T	8	each		
2.27.	Steel cross, 200 mm P x 1.5 inch T x 175 mm P x 1.5 inch T	5	each		
2.28.	Steel cross, 200 mm P x 1.5 inch T x 150 mm P x 1.5 inch T	1	each		
2.29.	Steel cross, 175 mm P x 1.5 inch T x 175 mm P x 1.5 inch T	4	each		
2.30.	Steel cross, 175 mm P x 1.5 inch T x 150 mm P x 1.5 inch T	1	each		
2.31.	Steel cross, 175 mm P x 1.5 inch T x 4 inch F x 1.5 inch T	4	each		
2.32.	Steel cross, 150 mm P x 1.5 inch T x 150 mm P x 1.5 inch T	3	each		
2.33.	Steel cross, 150 mm P x 1.5 inch T x 4 inch F x 1.5 inch T	2	each		
2.34.	Steel cross, 150 mm P x 1.5 inch T x 5 inch F x 1.5 inch T	2	each		
2.35.	Steel reducer, 300 mm P x 6 inch F	1	each		
2.36.	Steel reducer, 250 mm P x 6 inch F	10	each		
2.37.	Steel reducer, 150 mm P x 4 inch F	1	each		
2.38.	Steel reducer, 150 mm P x 3 inch F	1	each		
2.39.	Cast iron flange adapter, 150 mm x 6 inch F	1	each		
2.40.	Cast iron gate valves, 6 inch	15	each		
2.41.	Cast iron gate valves, 4 inch	1	each		

Item		Quantity	Unit	Unit cost	Total cost
2.42.	Cast iron gate valves, 3 inch	2	each		
2.43.	Brass gate valves, 3 inch	10	each		
2.44.	Brass gate valves, 2 inch	3	each		
3.	**Laterals, sprinklers**				
3.1.	Brass gate valves, 1.5 inch	160	each		
3.2.	Galvanized iron (GI) reducing bushes, 2 x 0.75 inch	258	each		
3.3.	GI reducing bushes, 1.5 inch x 0.75 inch	1 200	each		
3.4.	GI reducing bushes, 1.25 inch x 0.75 inch	462	each		
3.5.	GI risers, 1 m x 0.75 inch	1 920	each		
3.6.	GI elbows, 0.75 inch	1 920	each		
3.7.	Garden taps with brass hose adapters, 0.75 inch	1 920	each		
3.8.	GI tripods with 2 m (2x1m lengths), 0.5 inch riser	1 920	each		
3.9.	GI sockets, 0.5 inch	1 920	each		
3.10.	GI reducing bushes	1 920	each		
3.11.	GI elbows, male and female threaded, 0.75 inch	1 920	each		
3.12.	Brass hose adapters, 0.75 inch	1 920	each		
3.13.	Sprinkler, 3.0 mm nozzle on tripod and 2 m 0.5 inch riser	1 920	each		
3.14.	Hoses, 20 mm rated at 7 bar, 32 m each	1 920	each		
3.15.	Hose clips	3 840	each		
4.	**Trenching, back-filling**				
	Unskilled labour	810	workday		
5.	**Setting out**				
5.1.	Skilled labour	11	workday		
5.2.	Semi-skilled labour	11	workday		
5.3.	Unskilled labour	55	workday		
6.	**Pipe laying**				
6.1.	Skilled labour	11	workday		
6.2.	Unskilled labour	22	workday		
7.	**Access roads and drains**	112	mach.hr		
8.	**Fencing, 1 800 m**				
8.1.	Barbed wire, 4 lines	1 800	m		
8.2.	Corner posts	4	each		
8.3.	Gate, large 4.25 m	4	each		
8.4.	Skilled labour	14	workday		
8.5.	Unskilled labour	140	workday		
9.	**Pumping plant**				
9.1.	Pumphouse	2	lump sum		
9.2.	Suction pipe, complete with screen, non-return valve	2	each		
9.3.	Pressure gauge, flow meter, etc.	2	each		
9.4.	Centrifugal pump (Q = 75 m^3/hr, h = 39 m, Eff. = 60%)	2	each		
9.5.	18 kW motor (Eff. = 88%)	2	each		
9.6.	Skilled labour	-	lump sum		
9.7.	Unskilled labour	-	lump sum		
10.	**Toilet, storage structures, etc.**		lump sum		
	SUB-TOTAL				
	CONTINGENCIES 10%				
	TOTAL				

Note: P = Plain; F = Flanged; T = Threaded

Chapter 5

An example of the preparation of a tender document for the construction of a drip irrigation scheme for smallholders

This chapter provides an example of *Special conditions* and *Technical specifications* that were prepared for the construction of a drip irrigation scheme for smallholders in Zimbabwe, called "Hama-Mavhaire drip irrigation scheme".

5.1. Background and access to the scheme

The scheme is located in Mvuma District in the Midlands Province. The area can be accessed by a dust road that branches to the right at the 267.5 km peg on the Harare-Masvingo road. It is about 20 km from the main road and the turn-off to the scheme is only 30 km from Masvingo town. It is located next to an existing 92 ha drag-hose sprinkler irrigation scheme.

The scheme will be a drip irrigation scheme of a total area of 5 hectares, shared by 10 farmers with a holding of 0.5 ha each. The water for the proposed irrigation scheme will be pumped from the existing Hama-Mavhaire dam, which also supplies water to the existing sprinkler irrigation scheme. A separate pumping unit has to be installed for the drip system.

This document covers all the works for installing a pumping unit, connection to the electricity, filtering system, a pipe line for conveying and distributing the water to the farms and all the farm piping, equipment, driplines etc., as described in the tender documents and shown in the drawings.

5.2. Contract drawings

The works are shown on the contract drawings included in the tender documents amongst which are the following:

- Location map (Figure 13)
- Layout of the scheme (Figure 14)

5.3. General irrigation scheme layout

The scheme consists of 10 fields of about 0.5 ha each (Figure 14). The field sizes are as follows:

- Fields 1 - 7 are 72 m x 72 m
- Fields 8 and 9 are 36 m x 144 m
- Field 10 is made of two blocks of 36 m x 36 m for each block
- Between each field there is a pathway of 3 m

There will be only one pumping unit at the dam with a floating suction pipe and strainer. The pumping unit will be on a movable base with wheels. The major components on the main line are the filtering unit and the connection offtakes to each farm. There are 10 such offtakes, one for each farm, and each includes a fertilizer injector, pressure regulator, filter, etc., as shown on the details of the drawing. Each field is subdivided into six plots and each plot will be 12 m wide and 72 m long. Within each field there will be 6 valve assemblies serving the six identical irrigation plots through manifolds in the middle of the field (except for fields 8 and 9 in which the manifolds are along the boundary). The driplines, which are connected to the manifolds, serve both sides of the plot and are 36 m in length. It is expected to have 8 beds at each side of the manifold and hence 8 driplines of 36 m length. Thus each plot will have 16 beds (8 at each side) with one 36 m dripline per bed. Some differences exist in fields 8 and 9, where the shape of each of the six irrigation plots is 24 m x 36 m. However, each plot still has 16 driplines of 36 m length. The flow in each irrigation plot is estimated to be about 3 m^3/hr.

5.4. Special conditions

5.4.1. Protection of existing services and structures

Before commencing the works, the contractor shall obtain at their own cost any necessary licence and full information from respective authorities with regard to the position of all existing services and structures. The contractor has to exercise utmost care when working in the area. Before commencing the works they should forward a notice to the responsible authority outlining their intentions to work near the services or structures. The contractor should obtain written approval and must proceed in accordance to the requirements of the responsible authority. Any damages caused by the contractor to the services or structures due to their own negligence should be reported immediately to the responsible authority. The contractor will carry out the repairs at their own expense.

Figure 13
Location map of Hama-Mahvaire drip irrigation scheme

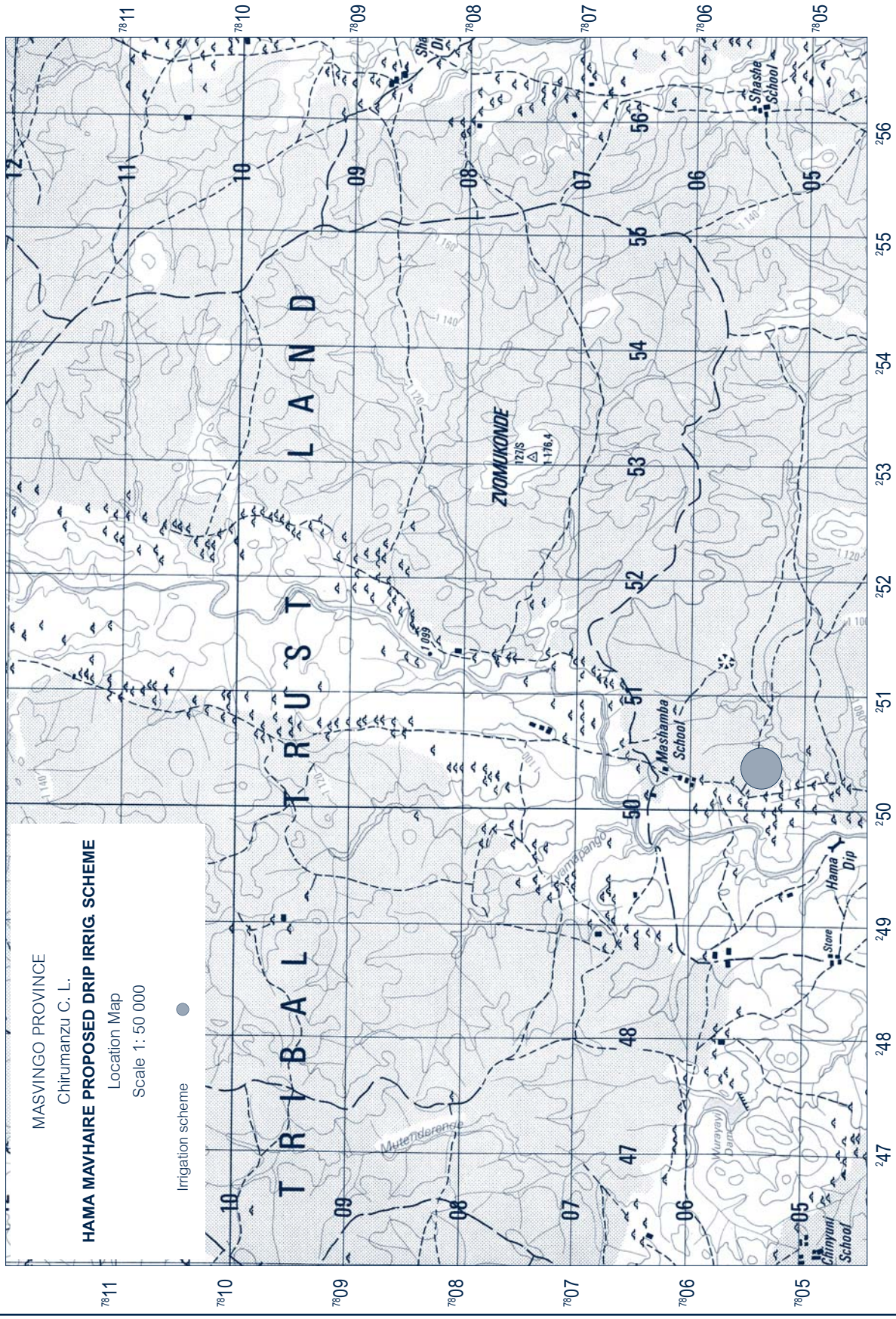

Figure 14
Layout of Hama-Mavhaire drip irrigation scheme

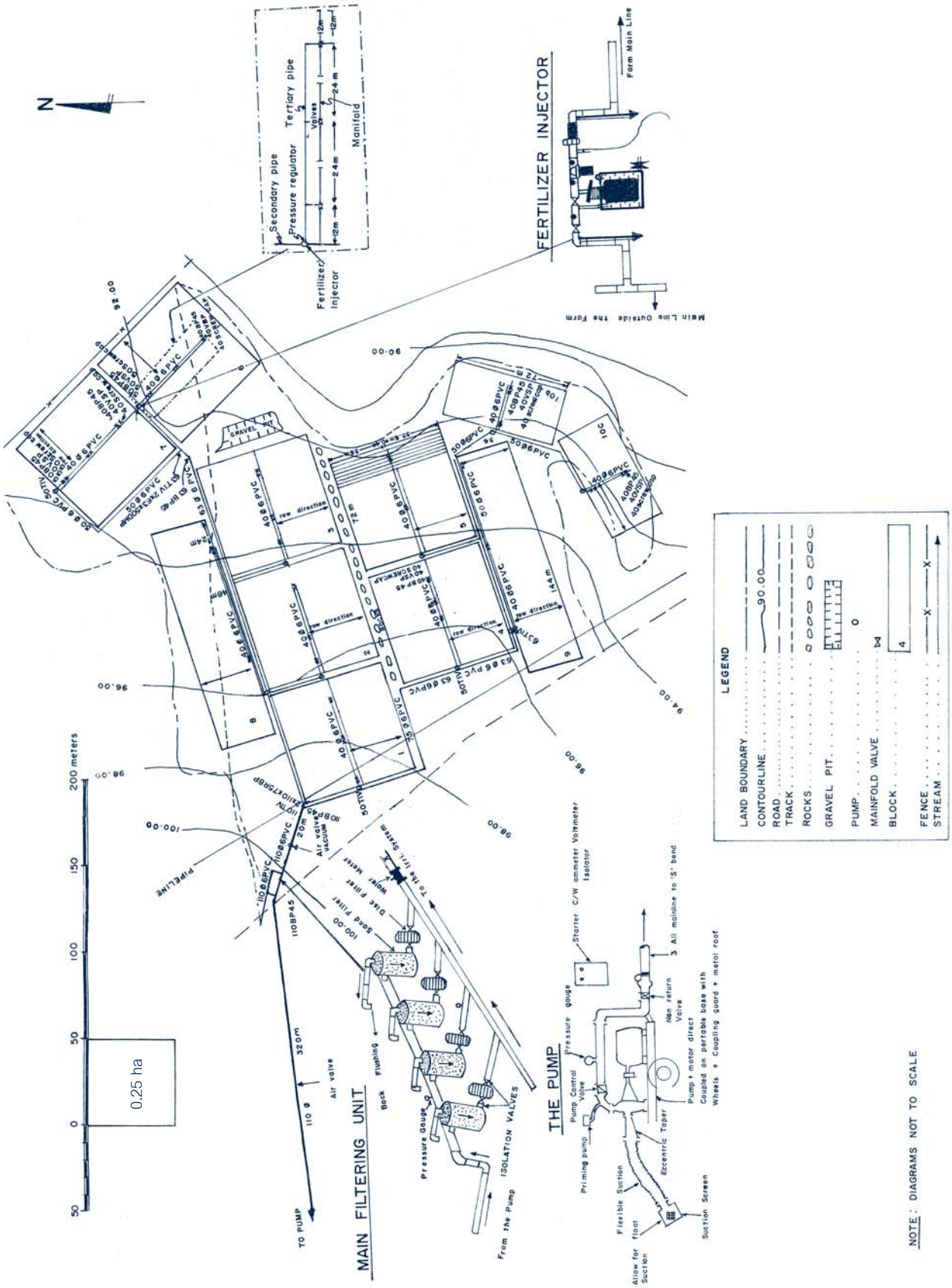

The contractor should take care of the existing supply line to the drag-hose sprinkler irrigation scheme. This line passes through the area of the drip irrigation scheme and the contractor will be held responsible for any damages and be asked to repair them to the full satisfaction of the engineer.

5.4.2. Sign board

The contractor shall supply and erect, at an approved site, a sign board which shall, regarding size, painting, decorating and details, comply with the requirements for the Standard Board recommended by the Zimbabwe Association of Consulting Engineers. The description of the project and the names of employer, engineer, contractor and sub-contractors to be painted on the board shall be as shown on the drawing supplied to the successful tenderer.

5.4.3. First aid outfit

The contractor shall provide on the site of the works an adequate and easily accessible *first aid outfit*, as required in terms of the Workmen's Compensation Act of Zimbabwe, Chapter 269, or any amendments thereto.

5.4.4. Materials

The scheme shall be constructed using uPVC pipes and fittings. Only the first portion of the mainline of about 48 m length (between the pump and the connection to the uPVC main) will be 3 inch diameter aluminium pipe. The pipes and fittings shall be of the type specified in the BOQ or shown on the drawings.

Except where otherwise stated or approved by the engineer, all materials used in the works shall be of the best quality of their respective kinds, as specified or described in the specifications and the drawing, and shall comply wherever possible with the current issue of the appropriate Standard Association of Zimbabwe, the British Standard Institution or other approved equivalent international standard as noted herein or approved by the engineer.

All materials and equipment needed for the system shall be new, without flaws or defects and of the quality and performance as specified and shall meet the requirements of the system.

Whenever any material is specified by name or number, such specification shall be deemed to be used for the purpose of facilitating a description and establishing quality of the material and shall be deemed and construed to be followed by the words "or approved equivalent".

All materials and equipment included in the works of the irrigation scheme shall be guaranteed by the tenderer against all defects, workmanship, for a period of one year from the date of acceptance of the irrigation system.

5.4.5. Procurement, packing and delivery

All uPVC pipes, materials and equipment required for this scheme shall be provided by the contractor unless otherwise stated herein.

Transportation of all materials and equipment for the construction of the irrigation scheme to the project site shall be the responsibility of the contractor. Once the materials and equipment have been offloaded at the project site, careful examination of the materials and equipment for damage, etc., shall be carried out by both the contractor and the engineer or their representative staff.

The contractor shall take all due care to avoid damage to pipes, fittings and specials during transportation to the site of the works. The pipes in transit shall be well secured and supported over their entire length and not be allowed to project over the tailboard of the transporting vehicle. Pipes shall not be dropped or thrown to the ground and impact with other pipes or solid objects shall be avoided. uPVC pipes of any diameter may be lifted by hand. All fittings shall be handled with care to avoid damage. They shall not be thrown, dropped or subjected to impact with other objects.

5.4.6. Storage of materials and equipment on site

The contractor shall take all reasonable care to avoid any damage to the pipes, fittings and specials during storage and subsequent handling, laying and jointing. The manufacturer's instructions in this regard shall be strictly adhered to. Particular care should be taken to ensure that no damage occurs to the ends of pipes and fittings to avoid subsequent problems of joining.

Storage areas or sheds shall be in accordance with the manufacturer's recommendations and subject to the approval by the engineer. Storage areas shall be level and clear of stones. Timber bearers of uniform size shall be placed under the bottom rows of stacked pipes at intervals of 800 mm. No stack of uPVC pipes shall be more than 2.5 m high. All storage areas shall be secure from pilfering or theft. Shade covers shall be provided for stacks of uPVC pipes and fittings to prevent their exposure to the direct rays of the sun at all times.

In addition to the above, contractor shall be deemed responsible for any deterioration of the materials and therefore for the replacement.

5.4.7. Working drawings and As built or Record drawings

The design drawings included in the tender documents are diagrammatic. The contractor should verify these as per actual field situation and should prepare *Working drawings* with all required details to assist in implementing the works properly and accurately. The engineer will approve such working drawings before implementation.

The contractor will update the working drawings on a daily basis as per the actual situation in the field. The engineer should approve any modifications, big or small. These drawings, which show the actual field situation and the system as it is built, will be the basis for preparing the *As built drawings* or *Record drawings.* The contractor will submit two copies on a reproducible form (tracing) of the *As built drawings* to the engineer, within a month of commissioning the system.

5.4.8. Trenching and back-filling

The farmers participating in the project shall do all the excavation of trenches. The work shall be carried out under strict supervision of personnel designated by the client. Placement of all uPVC pipes along the trenches shall be done after completion of trench excavations.

The farmers participating in the project shall do back-filling work. In the addition to the excavation and back-filling works, the client shall provide the contractor with a number of unskilled labourers to be used during the construction on the site. The involvement of the farmers is intended to make the farmers feel more responsible for their own project. The contractor shall specify the number of unskilled labourers required.

5.4.9. Pipe laying and connection

No pipes shall be laid until the engineer's approval has been obtained for the section of the works. uPVC pipes shall be laid strictly in accordance with the manufacturer's instructions. Before laying each pipe or fitting, it shall be inspected to ensure that no damaged item be installed in the line. Any item found to be damaged should be put aside for possible repair and later use, in the case of a pipe, as a make up piece. Any burrs and sharp ends shall be smoothened with a rasp to facilitate jointing.

When laying is about to commence, both ends to be joined shall be cleaned to remove dirt, soil, grit, oil or grease. The inside of the socket and the outside of the spigot shall be lightly sand-papered. The uPVC shall be cut with a handsaw or other equivalent means in such a manner as to ensure a square (straight) cut. Burrs at the ends shall be removed prior to installation so that a smooth unobstructed flow will be obtained.

All uPVC to metal joints shall be made with adapters of the same basic materials as the uPVC pipes wherever possible. The solvent recommended by manufacturer shall be used. The solvent-weld joints shall be made in the following manner:

a) Thoroughly clean the mating pipe

b) Apply a uniform coat of solvent to the outside of the pipe

c) Apply solvent to the fitting in a similar manner

d) Reapply a light coat of solvent to the pipe and quickly insert it into the fitting

e) Give the pipe or fitting a quarter turn to ensure even distribution of the solvent and make sure that the pipe is inserted to full depth of the fitting socket

f) Hold in position for 15 seconds

g) Wipe off excess solvent that appears at the outer shoulder of the fitting

Care should be taken not to use excess amounts of solvent. The joints should be allowed to set for at least 24 hours before pressure is applied to the system.

Pipes shall be laid true to the lines, with the socket facing in the direction of lay. The joint with the adjacent pipe shall then be made by sliding the spigot end into the previously laid pipe.

5.4.10. Keeping pipelines clean

Every reasonable precaution shall be taken to prevent entry of any foreign matter and water into the pipes. At the end of each day's work, or at any time when work is suspended for a significant period, the last laid section of each pipeline shall be plugged, capped, or otherwise tightly closed with a cloth or plastic sheet until laying recommences. If the pipe end is left open, and rain comes during the night, soil and dirt will enter the line and may not be easy to flush out. Furthermore, small animals such as rats may enter the line if it is left open.

5.4.11. Flushing

Flushing the system will be done in three stages:

Stage 1 : After installing the mains and offtake valves for each farm (before installing the field filters), a full head of water should be used to flush out the line. At first only the flushing point of the main is left open so the water will flush out with high speed any soil trapped in the line. Then the flushing point of the main is closed

and the offtake valves to each field are opened all together.

Stage 2 : After completing the installation of the sub-mains and the manifolds in each field, including the grommet connection with a piece of blank polyethylene dripline (before connecting to the driplines), flush the lines. At the beginning the flushing point of each sub-main is opened (one by one). When the soil and other dirt have been flushed away, the flushing point is closed and valves for each manifold are opened.

Stage 3 : A final flushing is done after the installation of the driplines. The end of the driplines for each manifold is left open. Water is allowed to go to one manifold at a time in order to have better flushing.

5.4.12. Pressure testing

After the installation of the mainline, the lines, including the sub-main line, are pressure tested. The pressure test may be done by using a hand pump. The pipe length to be tested at any time should not exceed 300 m. The pressure test should be done at 7 bar. The duration of the test should be 12 hours.

The procedure to be followed for testing the mainline is as follows:

a) Partially back-fill the pipes to be tested, leaving the sockets uncovered; all joints and connection points to be left open for leakage inspection

b) Flush the mainline with water to get rid of the soil and other dirt

c) Refill the mainline with water

d) Open the valves to remove any entrapped air

e) Using a hand pump pressurize the line to the required operating pressure

f) Leave the system pressurized for up to 12 hours

g) Check for leakages; any drop of pressure, even of small value, is the result of a leakage

h) Repair the leakage and leave the system for 24 hours if solvent-welding was used for repairs

i) Repeat the pressure test after filling the line with water; if the pressure does not drop from the original set value, within 12 hours then the test is considered a success

Should any pipeline fail to operate within the specified operating range, the contractor shall investigate the causes of such failure, report the results to the engineer and undertake such remedial work as the engineer may direct. Should such failure be the result of an error in the engineer's design, the cost of such remedial work shall be borne by the client. Otherwise it shall be at contractor's own expense.

5.4.13. uPVC – dripline connections

The contractor will connect the driplines to uPVC by using grommets. Drilling holes on the uPVC manifold for installing the grommets should be done with great care. The diameter of the drilled hole should be such that the rubber ring is tightly fixed in order to avoid water leakage. Holes with irregular shape and blisters should be avoided.

A piece of blank PE dripline of 1-2 m length and about 1 mm wall thickness should be used after the grommet connection. A connector with a lock-in plastic attachment is always left at the end of blank PE line in order to connect the dripline carrying the emitter.

The engineer reserves the right to instruct the contractor to remove any uPVC manifold if the grommet connections (due to bad drilling of holes, use of low quality rubber or due to unsuitable grommets) are not satisfactory. Such removal and replacement will be at no cost to the client.

5.4.14. Timing/Scheduling of works

The contractor shall present in their tender a schedule of all their activities for completing the scheme. Among others, the contractor will state the delivery time of all the materials to site. The contractor shall be penalized for failure to complete the tendered works as stated under the general conditions.

Upon the testing and acceptance of the system, and within the warranty period of 12 months, the contractor shall repair any reported faulty equipment and breakages within three (3) days. If the contractor does not respond within the specified time, the client carries out the repairs, the cost of which is deducted from the 10% retention.

5.4.15. Workmanship

All workmanship shall be of the best quality appropriate to each category of work.

5.4.16. Variation order

Changes in construction, which have not been envisaged in the design stages or at the time of acceptance of the tender but which are necessary for the proper operation of the system, can be made upon the instruction of the engineer in writing. There has to be a written response from the contractor, stating the costs of such changes. Upon approval

by the engineer, the contractor can commence or continue with construction of the necessary works.

5.4.17. Progress reports

The contractor shall provide the engineer with progress reports every 15 days covering the progress during that period and the total works completed to date. The progress report, will indicate:

- Planned progress to date
- Actual progress to date
- Variance between planned progress and actual progress
- Reasons for variance in progress
- Revised work/completion date
- Important issues on which the engineer should be informed

5.4.18. Clearing the site upon completion of works

When the contract works have been completed, the contractor shall, at their own expense, remove all rubbish, surplus materials and debris, unused material, temporary erections and equipment. The contractor shall make the site and adjoining ground perfectly clean and to the satisfaction of the engineer.

5.5. Technical specifications

5.5.1. General

The mainline consists of:

- 48 m portable aluminium pipe of 3 inch diameter
- 200 m uPVC pipe of 110 mm diameter (Class 6)
- 320 m uPVC pipe of 110 mm diameter (Class 4)
- 245 m uPVC pipe of 75 mm diameter (Class 6)
- 278 m uPVC pipe of 63 mm diameter (Class 6)
- 365 m uPVC pipe of 50 mm diameter (Class 6)

From the mainline there will be connection to sub-mains for each field through an offtake of 40 mm. There are 10 such offtake connections consisting of:

- Ball valve 1 inch (opening or closing the water)
- Gate Valve 1 inch
- Fertilizer injector
- Filter 1 inch, 130 micron, disc filter
- Pressure regulator ¾ inch spring type

The 40 mm sub-mains cross the middle of each field, except for long fields 8 and 9, and supply water to the six irrigation valve assemblies (irrigation plots) in each field. Each irrigation valve supplies a PVC manifold of 40 mm 6 bar, on which the driplines are connected via grommets.

The following will be used for the sub-mains and manifolds:

- 80 m uPVC pipe of 50 mm diameter (Class 6)
- 1 628 m uPVC pipe of 40 mm diameter (Class 6)

A total number of 60 irrigation valve assemblies will be needed for the ten fields and about 34 600 m of dripline with emitters will be installed.

5.5.2. uPVC pipe work and fittings

All uPVC pipes and fittings shall be polyvinyl chloride semi-rigid. The sizes and working pressure ratings shall be as shown in the BOQ. All uPVC pipes shall be solvent-weld for pipes less than 63 mm diameter in the length of 6 m, and of appropriate sizes and pressure ratings. PVC pipes and fittings exposed to the sun should be painted with sunrays protection material.

Each length of pipe shall bear markings identifying the size, type and pressure rating. The pipes shall be smooth finished both inside and outside and shall show no evidence of interior scratches, grooves, or any other manufacturing or handling damage. The inside shall show no evidence of blisters, grooves or other extrusion marks. All uPVC fittings shall be of the same basic material of the uPVC. Thrust blocks have to be placed at all points where the pipeline changes direction (elbows, tees, etc.).

5.5.3. Aluminium pipes

Aluminium pipes should be of the extruded type, with hardness T/6, as supplied by Almin Industries with the following specifications:

- Outside Diameter (OD) = 76.2 mm (3 inch)
- Wall thickness = 1.28 mm
- Weight = 0.817 kg/m

5.5.4. Galvanized Iron pipes

GI pipes should be of medium steel, class B, conforming to SAZ or equivalent for GI pipes. No GI pipe shall be used downstream of the head of the system.

5.5.5. Driplines

Driplines must be made of low-density polyethylene (LDPE) and should be of a hose of nominal 16 mm diameter. The wall thickness of the tube should not be less than 0.6 mm. Technical specifications should be submitted with the tender.

5.5.6. Emitters

Emitters should be in-line, non-pressure compensating and with approximate flow of 2 litres/hr at 1 bar pressure, spaced at 0.4 m interval. This will correspond to 5 litres/hr per running metre of dripline. Flow versus pressure charts of the dripline should be submitted.

5.5.7. Gate valves

Gate valves of 3 inch diameter and above shall be made of cast iron, double flanged, parallel double disc seat, with non-rising stem. Gate valves of less than 3 inch diameter will be of brass body with the ability to remove the internal parts without disconnecting the body from the pipe system.

5.5.8. Ball valves

Ball valves should be of quarter turn, made from nickel-plated brass and Teflon type.

5.5.9. Air release valves and vacuum breakers

Air release valves and vacuum breakers can be of cast iron, plastic or aluminium bodies with plastic valve mechanism. The range of operating pressure is to be 0.5 to 8.0 bar. Contractors should indicate in the BOQ the type of material for which they are pricing.

5.5.10. Pressure gauges

The contractor shall provide glycerin-filled pressure gauges of 2.5 inch face diameter. Those installed on the pipe network will have an installation adapter and will register pressures ranging from 0-10 bars. Portable pressure gauges shall be provided with male adapters and shall register pressure ranging from 0-2.5 bars.

5.5.11. Pressure regulators

The pressure regulators shall be single spring (11 m spring) fitted, enabling a constant downstream pressure regardless of the upstream pressure. The regulators should be durable and robust.

5.5.12. Sand filters

Sand filter vessels should be made of steel, epoxy coated, and capable of withstanding an 8 bar pressure. The filtering media should be crushed graded basalt, granite or washed river sand.

There should be four identical units, each capable of filtering 15 m^3/hr with a pressure drop of less than 1 m. The four units should be pre-assembled on a rigid steel frame, made either of pressed steel or channel iron. Backwash valves shall be of the hydraulic type, with manual control for backwashing each filter separately. All connecting PVC pipe work, if used, should be class 16. Each vessel will be equipped with an air release valve. Pressure gauges will be installed at the inlet and outlet headers. The whole unit should be on a concrete base of 20 cm thickness. The concrete should be Grade 25.

5.5.13. Disc filters

Disc filters (there is one for each sand filter) should be of multi-grooved type and having a filtering capacity of 15 m^3/hr for each unit with a drop of pressure of less than 2 m. The disc should be 130 micron. The filters are installed after the sand filtering unit. Isolation ball valves should be installed for allowing individual washing of each filter without interrupting the irrigation. Pressure gauges should be installed before and after for monitoring the clogging conditions and need for cleaning. A water tap and hose should be provided for cleaning the filters. Infield filters should have a flow capacity of 4 m^3/hr and be of 130 micron.

5.5.14. Fertilizer injectors

The fertilizer injector should be a closed tank with a bladder inside. The tank may be made of steel, capable of withstanding 8 bar pressure and of 10 litres capacity. It should allow the injection of fertilizer based on the differential pressure. The fertilizer solution being in the bladder does not get mixed with water coming into the tank and hence the outgoing solution will have a constant concentration.

5.5.15. Water meters

The water meters shall be made of a cast iron body with brass movable internal parts, a strong glass cover for the measuring unit and a second cast iron cover for the class for the protection of the meter from external damage. The meter should be capable of measuring a continuous flow of 35 m^3/hr with an accuracy of $\pm$ 2% and a head loss of less than 0.5 m. Head loss charts for the water meter should be submitted with the tender. The meter should be capable of

registering the total quantity of water passed and the needle turning around recording 1000 litres each round.

5.5.16. Pumping station

The pumping unit will be portable and mounted on a trailer with wheels. It will consist of an end-suction centrifugal pump capable of delivering 35 m^3/hr at 55 m head at the highest possible efficiency. The pump will be directly driven by an electric motor. The electric panel should have an enclosure containing all electrical wiring and controls. The panel will also include, in addition to the starter and reset button, a voltmeter, an ammeter, low pressure cut-out switch, earthing and protection against lightning and steel roof for weather protection. The pumping unit will have a flexible rubber suction hose, a suction screen with deflector (cover to allow suction from down and aside) and a float to allow floating suction from about 1 m below the water level. The pump will also be equipped with a priming hand pump. The contractor should do all the connections and installation of the cable from the transformer to the pumping unit.

5.6. Bill of Quantities

Tables 6-9 give the BOQs for the Hama-Mavhaire drip irrigation scheme.

Table 6
Bill of Quantities for the booster pump, filtration and establishment

Item no.	Description	Number or quantity	Unit	Unit rate or price	Total amount
	Supply, installation, testing and commissioning				
1	Portable pumpset 35 m^3/h to 55 m c/w starter	1	No.		
2	Suction and delivery fittings	1	No.		
3	Electrical connection from transformer DB to pump	1	No.		
4	Sand and disc filtration unit for 35 m^3/h (4x20 inch units) with connection piping, pressure gauges etc as per specifications and drawings	1	No.		
5	3 inch flow meter	1	No.		
6	Establishment cost	1	Lump sum		
	Total part 1: booster pump, filtration and establishment				

Table 7
Bill of Quantities for the mainline

Item no.	Description	Number or quantity	Unit	Unit rate or price	Total amount
	Supply, installation, testing and commissioning				
1	Aluminium pipe 3 inch x 6 m	48	m		
2	PVC pipe 110 mm, Class 16	2	m		
3	PVC pipe 110 mm, Class 6	200	m		
4	PVC pipe 110 mm, Class 4	320	m		
5	PVC pipe 75 mm, Class 6	245	m		
6	PVC pipe 63 mm, Class 6	278	m		
7	PVC pipe 50 mm, Class 6	365	m		
8	3 inch TD flange x 4 inch TD flange S bend x 1m	1	No.		
9	3 inch Wafer type return valve	1	No.		
10	3 inch TD flange x hook & band assembly x 1m	1	No.		
11	110 BP90 degree bend	4	No.		
12	110 BP45 degree long bend	2	No.		
13	110 TCPTBRP PVC flange adapter	3	No.		
14	110 x 1 inch Saddle	2	No.		
15	1 inch GI stub x 1 m	2	No.		
16	1 inch Gate valve	2	No.		
17	1 inch Dual purpose air valve	2	No.		

Item no.	Description	Number or quantity	Unit	Unit rate or price	Total amount
18	110 TIV equal tee	1	No.		
19	75 TIV equal tee	1	No.		
20	63 TIV equal tee	3	No.		
21	110 x 75 DIVP reducing bush	2	No.		
22	75 x 63 DIVP reducing bush	3	No.		
23	63 x 50 DIVP reducing bush	6	No.		
24	75 BP90 degree long bend	2	No.		
25	63 BP90 degree long bend	1	No.		
26	63 BP90 degree long bend	1	No.		
27	50 BP90 degree long bend	1	No.		
28	50 BP90 degree long bend	7	No.		
29	50 VSP threaded male adapter	6	No.		
30	1¼nch PVC female threaded end cap	6	No.		
31	PVC solvent cement 500 ml	8	No.		
32	4 inch Bolt and gasket sets	4	No.		
33	3 inch Bolt and gasket sets	2	No.		
34	Concrete for filter bases and thrust blocks	–	Lump sum		
		Total part 2: mainline			

Table 8
Bill of Quantities for the infield works

Item no.	Description	Number or quantity	Unit	Unit rate or price	Total amount
	Supply, installation, testing and commissioning				
1	PVC pipe 32 mm Class 16	153	m		
2	PVC pipe 40 mm Class 16	24	m		
3	PVC pipe 40 mm Class 6	1 628	m		
4	PVC pipe 50 mm Class 6	80	m		
5	75 TIV 90 degree tee	3	No.		
6	63 TIV 90 degree tee	1	No.		
7	50 TIV 90 degree tee	8	No.		
8	40 TIV 90 degree tee	31	No.		
9	40 VSP threaded male adapter	71	No.		
10	32 GIV 90 degree elbow	72	No.		
11	40 GIV 90 degree elbow	120	No.		
12	32 PVC unions	70	No.		
13	75 x 63 DIVP reducing bush	3	No.		
14	63 x 50 DIVP reducing bush	4	No.		
15	¾nch Reinforced hose	40	m		
16	¾nch Hose clips	70	No.		
17	¾nch Poly and male thread adapter	20	No.		
18	¾nch Disc filter	10	No.		
19	PTFE Tape	50	No.		
20	Start connector with grommet	960	No.		
21	14 mm ID polypipe	1 440	m		
22	Poly x drip insert connector	960	No.		
23	Drip x drip insert connector	200	No.		
24	End closure of dripline	960	No.		
25	Steel support peg x 1.5 m	82	No.		
26	Dripline 0.6 mm wall thickness, max 5 l/h/m	34 560	m		
		Total part 3: infield works			

Table 9

Bill of Quantities for the spare parts

Item no.	Description	Number or quantity	Unit	Unit rate or price	Total amount
	Supply (ONLY) to AGRITEX stores				
1	PVC pipe 32 mm, Class 16	12	m		
5	40 BP45 degree long bend	4	No.		
6	40 VSP threaded male adapter	4	No.		
8	1 inch Parallel socket	1	No.		
23	Drip x drip insert connector	100	No.		
26	Dripline 0.6 mm wall thickness, max 5 l/h/m	2 000	m		
		Total part 4: spare parts			

References

Agritex. 1990. *Nabusenga irrigation scheme: feasibility and design report.* Unpublished.

Agritex. 1993. *Bonde (Block A) smallholder irrigation scheme: feasibility study.* Unpublished.

Cement and Concrete Institute. 1986. *Concrete construction. A handbook.* Harare.

Council of South African Bureau of Standards (SABS). 1976. *Standards specifications for components of Unplasticized polyvinyl chloride (uPVC) pressure pipes for potable water.* Pretoria. 55 p.

International Standard 2548. 1973. *Centrifugal, mixed and axial pumps – Code of acceptance tests – Class C.*

International Standard 8026. 1985. *Irrigation equipment – Irrigation sprayers – General requirements and test methods.*

International Standard 8224/1. 1985. *Traveller irrigation machines Part 1. Laboratory and field test methods.*

International Standard 8224/2. 1985. *Traveller irrigation machines Part 2. Softwall hose and couplings - Test methods.*

International Standard 7749/1. 1986. *Irrigation equipment – Rotating sprinklers – Part 1: Design and operation requirements.*

International Standard 7749/2. 1990. *Irrigation equipment – Rotating sprinklers – Part 2: Uniformity of distribution and test methods.*

International Standard 9260. 1991. *Agricultural irrigation equipment – Emitters – Specifications and test methods.*

Zimbabwe Institute of Engineers (ZIE) and the Construction Industry Federation of Zimbabwe (CIFZ). 1995. *Project management course handbook.* Harare.

Zimbabwe Institute of Engineers (ZIE) in association with the Construction Industry Federation of Zimbabwe (CIFZ). 1997. *Construction site management course handbook.* Harare. 62 p.

Zimbabwe Institute of Engineers (ZIE) and the Federation of Civil Engineering Contractors of Zimbabwe Association of Consulting Engineers. 1984. *Zimbabwe General conditions of contract (ZGCC)*. Fourth edition. Harare. 31 p.