HYUNDAI
HEAVY INDUSTRIES CO.,LTD.

WARNING

INSTALLATION SHOULD ONLY BE PERFORMED BY QUALIFIED INSTALLATION PERSONNEL AND MUST CONFORM TO ALL NATIONAL AND LOCAL CODES

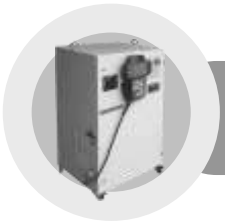

Hi5 Controller Function Manual

Stationary Tool Interpolation

HYUNDAI
HEAVY INDUSTRIES CO.,LTD.

HYUNDAI
HEAVY INDUSTRIES CO.,LTD.

HYUNDAI
HEAVY INDUSTRIES CO.,LTD.

HYUNDAI
HEAVY INDUSTRIES CO.,LTD.

The information included in this manual is the property of HHI.
This manual may not be copied, in part or in full, without prior written authorization from HHI.
It may not be provided to any third party, nor used for any other purposes.

HHI reserves the right to modify the content of this manual without prior notification.

Printed in Korea – Jul. 2013. 1st Edition
Copyright ⓒ 2013 by Hyundai Heavy Industries Co., Ltd

HYUNDAI
HEAVY INDUSTRIES CO.,LTD.

Contents

1. Overview 1-1

1.1. Concept of the stationary tool interpolation 1-2
1.2. Operation sequence 1-3

2. Related Functions 2-1

2.1. Setting and teaching methods 2-2
2.1.1. Stationary tool coordinate system registration 2-2
2.1.2. Stationary tool number selection 2-3
2.1.3. Display of the currently selected tool number 2-3
2.1.4. Stationary tool interpolation jog function 2-4
2.1.5. Linear interpolation programming method 2-4
2.1.6. Example of program preparation 2-5

HYUNDAI
HEAVY INDUSTRIES CO.,LTD.

HYUNDAI
HEAVY INDUSTRIES CO.,LTD.

1

Overview

1.1. Concept of the stationary tool interpolation

The stationary tool interpolation function can be applied in a way that a stationary tool, fixed to a location outside a robot, performs linear and circular interpolation operations on a workpiece. The operator needs to designate the teaching position corresponding to the stationary sealing tool, as shown below, and prepares a robot program by creating interpolation steps for the stationary tool. Then, According to thus created program, the robot will operate to allow the stationary tool to create a linear or circular trajectory for the workpiece.

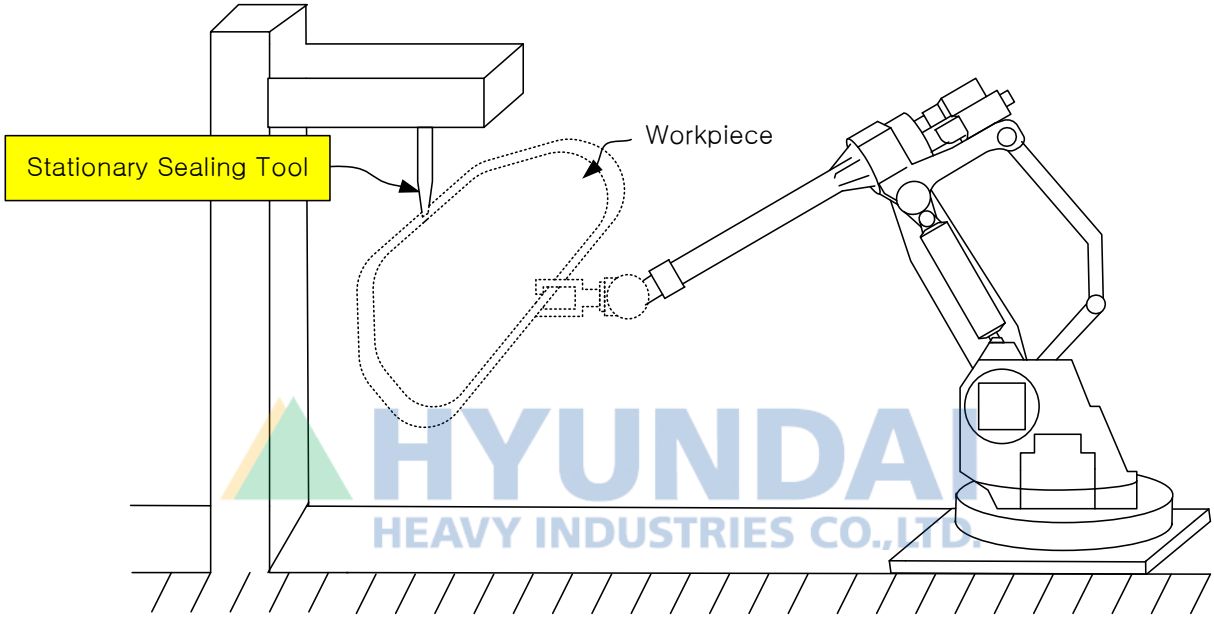

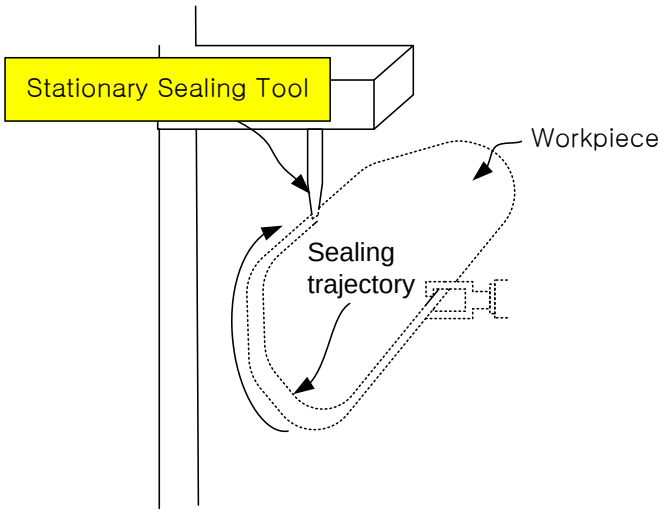

1.2. Operation sequence

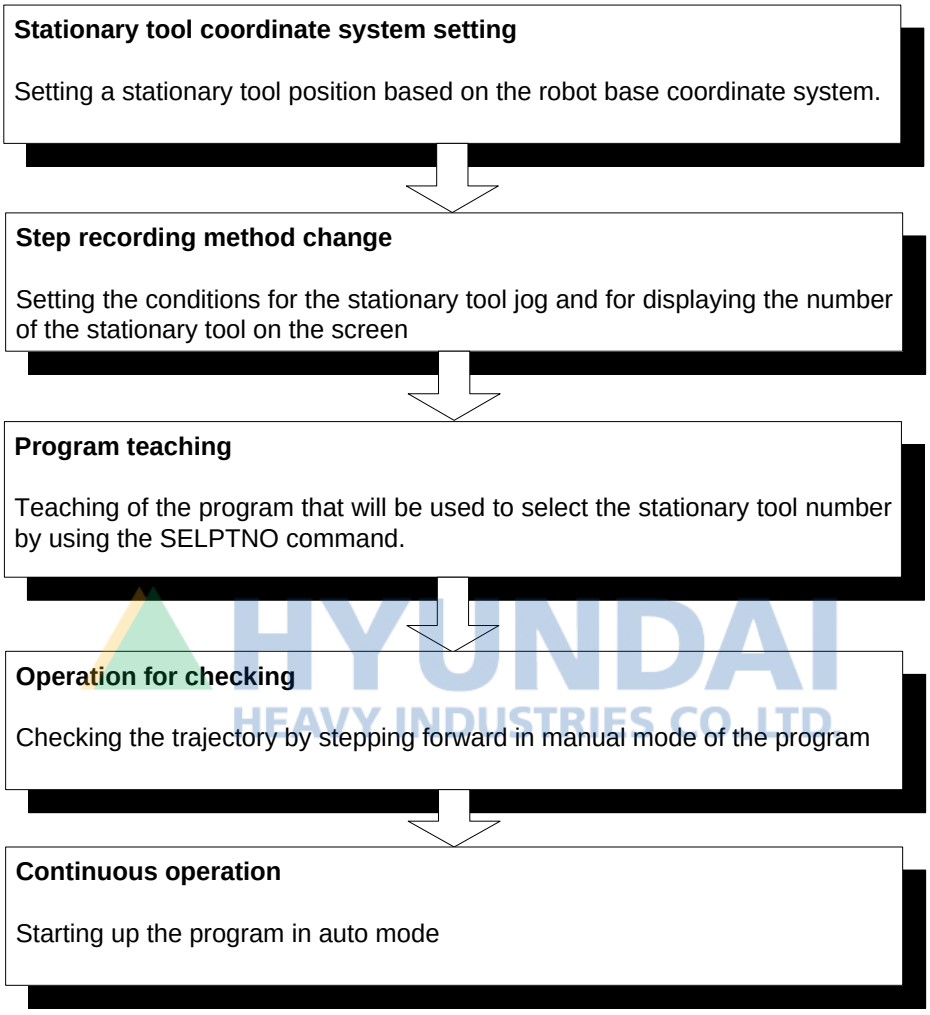

HYUNDAI HEAVY INDUSTRIES CO.,LTD.

HYUNDAI
HEAVY INDUSTRIES CO.,LTD.

2 Related Functions

HYUNDAI
HEAVY INDUSTRIES CO.,LTD.

2.1. Setting and teaching methods

2.1.1. Stationary tool coordinate system registration

A stationary tool installation position needs to be registered as the reference position for the base coordinate system. In general, it is possible to locate the position of a stationary tool by matching the TCP between the stationary tool and a robot tool.

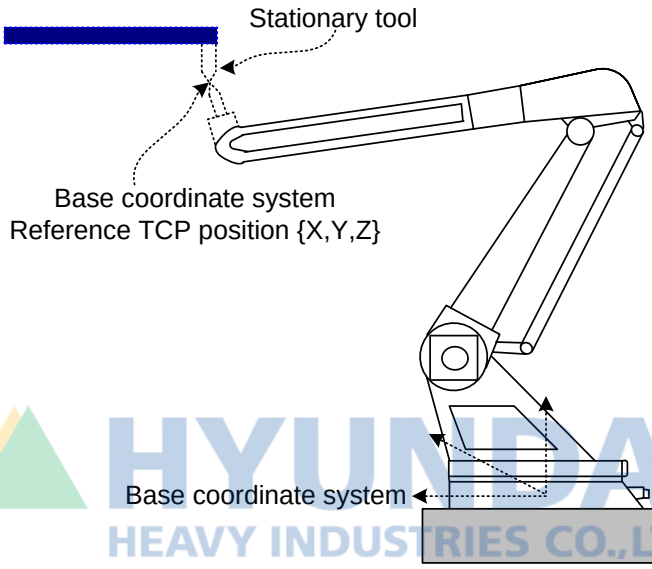

HYUNDAI
HEAVY INDUSTRIES CO.,LTD.

Select 『[F2]: System』 → 『2: Control parameter』 → 『7: Coordinate registration』→ 『2: Stationary tool coordinate』. Pressing the Auto Setting (F1) key will allow the current TCP value to be entered. For saving the set value, it is required to press the Complete (F7) key and exit the menu.

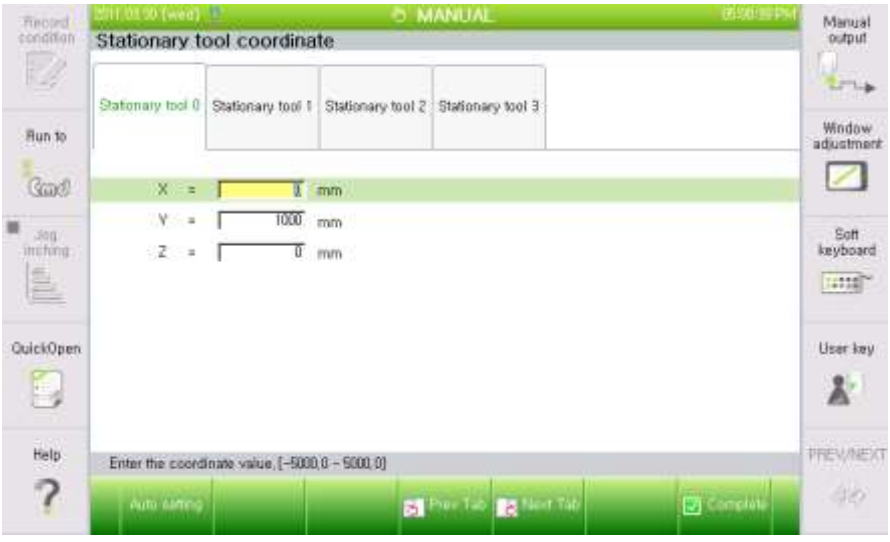

2.1.2. Stationary tool number selection

This is a method for selecting a stationary tool number at the program.
For the stationary tool number, the SELPTNO command needs to be used.

SELPTNO TN=Parameter 1		Remarks
Parameter1 (Tool No.)	Stationary tool number selection	Setting range: 0~3

2.1.3. Display of the currently selected tool number

In order to check a stationary tool number, which is selected using the SELPTNO command, from the teaching pendant, it is required to shift to ‘Stationary tool’ at the “8: Interpolation base” item.

If ‘Robot tool’ is selected for ‘Interpolation base’, a robot tool number will be displayed on the teaching pendant. If ‘Stationary tool’ is selected for interpolation base, a stationary tool number will be displayed on the teaching pendant.

2.1.4. Stationary tool interpolation jog function

When “stationary tool” is selected for “interpolation base”, a tool’s end part will be fixed based on the stationary tool position when jogging for the rectangular coordinate system or the tool coordinate system. By going through the process, it will be possible to perform teaching that requires change of pose while the position is fixed.

2.1.5. Linear interpolation programming method

As a stationary tool number is to be changed through the SELPTNO command, the SELPTNO command must be recorded prior to the MOVE command in order to set the stationary tool number. In the same context, the SELPTNO command should be used when needed to change a stationary tool number.

For commanding the stationary tool linear interpolation, the MOVE SL command should be used. The user can shift to the MOVE SL command for the use, or record the MOVE command first before changing to the MOVE SL command to apply interpolation.

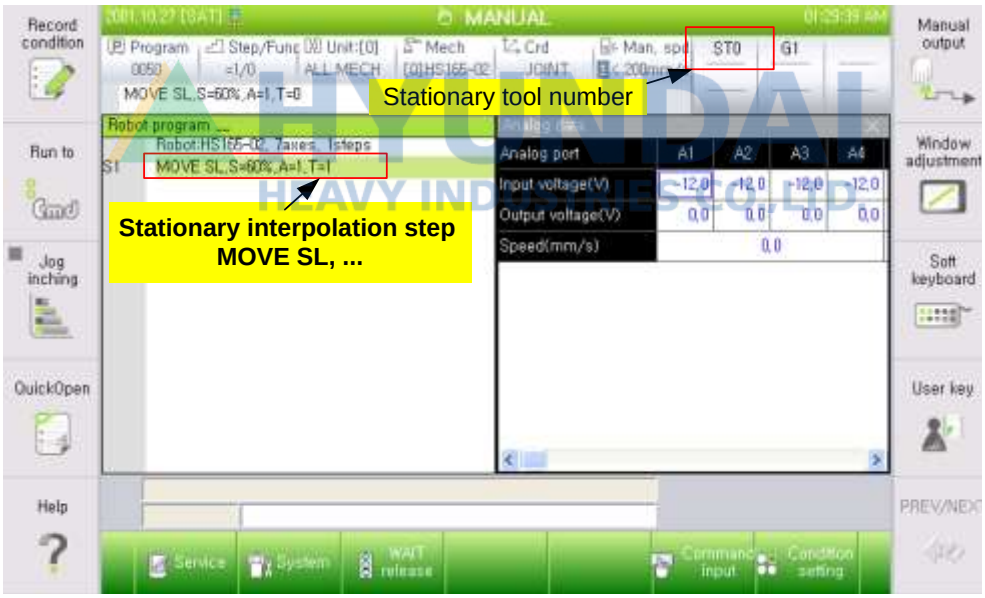

If a stationary tool value set for the SELPTNO command is wrong, it will lead to abnormal operation. Users should pay attention to it.

2.1.6. Example of program preparation

(1) Linear interpolation (MOVE SL)

While the robot is handling a workpiece, if a stationary sealing tool needs to be used for its outer area, the user needs to move the robot to perform teaching by matching the workpiece position to the sealing tool. For example, if sealing needs to be applied from S1 to S2 in a linear line as shown below, the user needs to record Step 1 as shown in Figure b), and, considering that movement to S2 needs to take place by applying the stationary tool interpolation, the teaching for S2 can be performed by moving the position and pose of the robot as shown in Figure c).

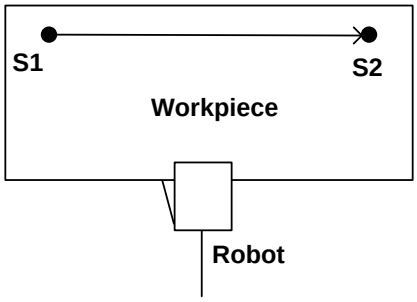

a) Required sealing trajectory

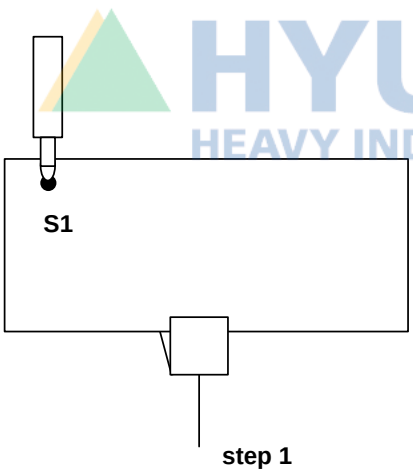

b) Step 1 teaching position

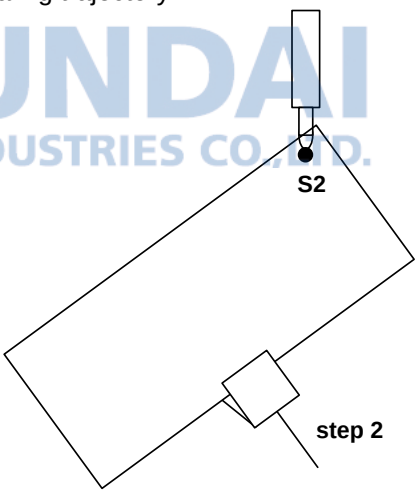

c) Step 2 teaching position

HYUNDAI HEAVY INDUSTRIES CO.,LTD.

According to the teaching program, the robot will move in a way to allow the stationary tool to move in a linear line on the workpiece.

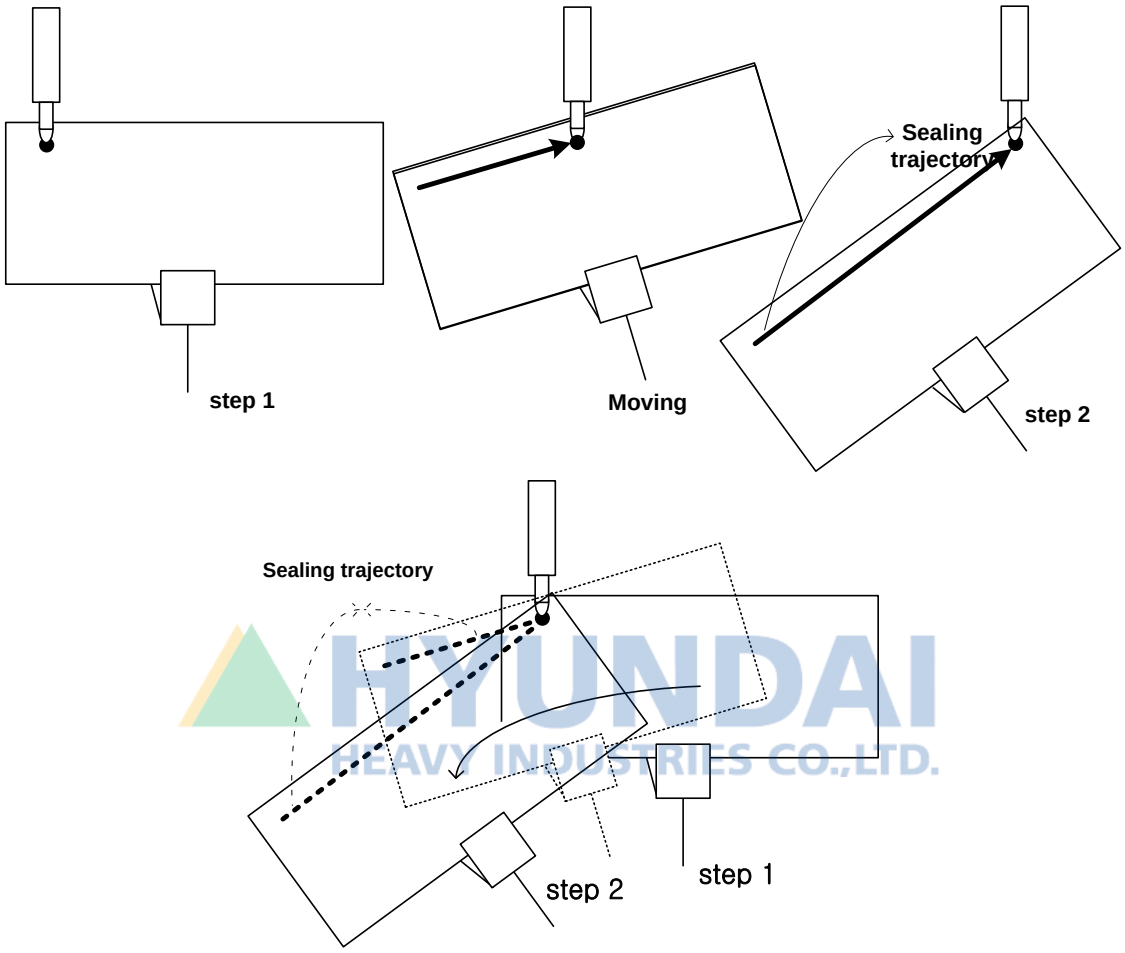

HYUNDAI HEAVY INDUSTRIES CO.,LTD.

(2) Circular interpolation (MOVE SC)

The stationary tool interpolation function also supports circular interpolation. As shown below, the desired steps need to be recorded by applying circular interpolation

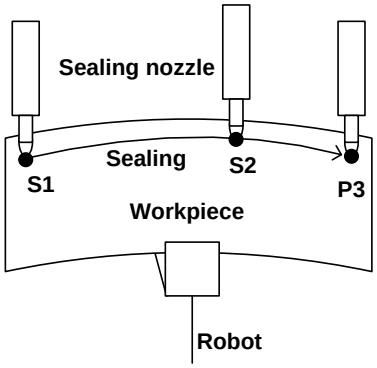

As shown above, after the teaching for Step 1 is performed, the teaching for Step 2 needs to be carried out by applying circular interpolation. Then, the teaching for Step 3 needs to be performed in a way to allow Step 3 to become a step that can be referred to suitably for the circular interpolation. When it comes to the steps for which the teaching is performed for the stationary tool circular interpolation, the robot will move to allow the stationary tool to move in a circular line on the workpiece.

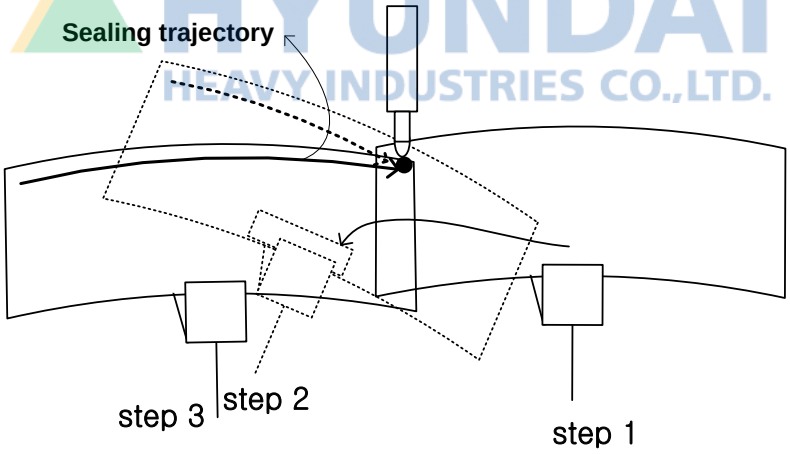

HYUNDAI HEAVY INDUSTRIES CO.,LTD.

HYUNDAI
HEAVY INDUSTRIES CO.,LTD.

HYUNDAI
HEAVY INDUSTRIES CO.,LTD.

- **Head Office**
  Tel. 82-52-202-7901 / Fax. 82-52-202-7900
  1, Jeonha-dong, Dong-gu, Ulsan, Korea

- **A/S Center**
  Tel. 82-52-202-5041 / Fax. 82-52-202-7960

- **Seoul Office**
  Tel.82-2-746-4711 / Fax. 82-2-746-4720
  140-2, Gye-dong, Jongno-gu, Seoul, Korea

- **Ansan Office**
  Tel.82-31-409-4945 / Fax.82-31-409-4946
  1431-2, Sa-dong, Sangnok-gu, Ansan-si, Gyeonggi-do, Korea

- **Cheonan Office**
  Tel.82-41-576-4294 / Fax.82-41-576-4296
  355-15, Daga-dong, Cheonan-si, Chungcheongnam-do, Korea

- **Daegu Office**
  Tel.82-53-746-6232 / Fax.82-53-746-6231
  223-5, Beomeo 2-dong, Suseong-gu, Daegu, Korea

- **Gwangju Office**
  Tel. 82-62-363-5272 / Fax. 82-62-363-5273
  415-2, Nongseong-dong, Seo-gu, Gwangju, Korea

- **본사**
  Tel. 052-202-7901 / Fax. 052-202-7900
  울산광역시 동구 전하동 1 번지

- **A/S 센터**
  Tel. 82-52-202-5041 / Fax. 82-52-202-7960

- **서울 사무소**
  Tel. 02-746-4711 / Fax. 02-746-4720
  서울특별시 종로구 계동 140-2 번지

- **안산 사무소**
  Tel. 031-409-4945 / Fax. 031-409-4946
  경기도 안산시 상록구 사동 1431-2 번지

- **천안 사무소**
  Tel. 041-576-4294 / Fax. 041-576-4296
  충남 천안시 다가동 355-15 번지

- **대구 사무소**
  Tel. 053-746-6232 / Fax. 053-746-6231
  대구광역시 수성구 범어 2 동 223-5 번지

- **광주 사무소**
  Tel. 062-363-5272 / Fax. 062-363-5273
  광주광역시 서구 농성동 415-2 번지

HYUNDAI HEAVY INDUSTRIES CO.,LTD.