
VOLVO

2

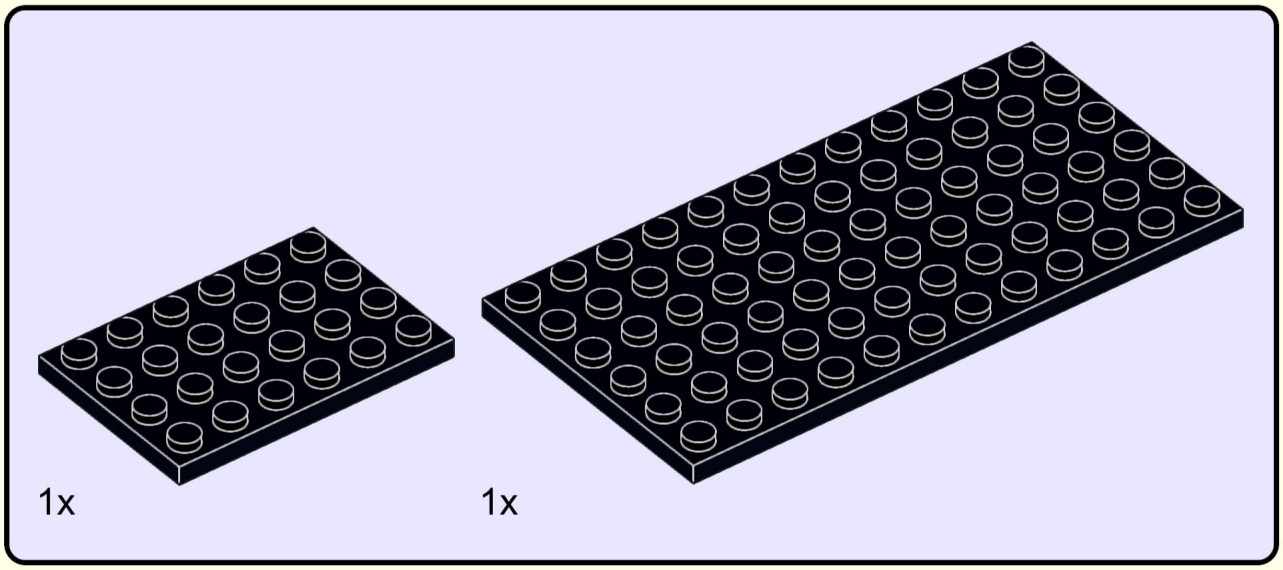

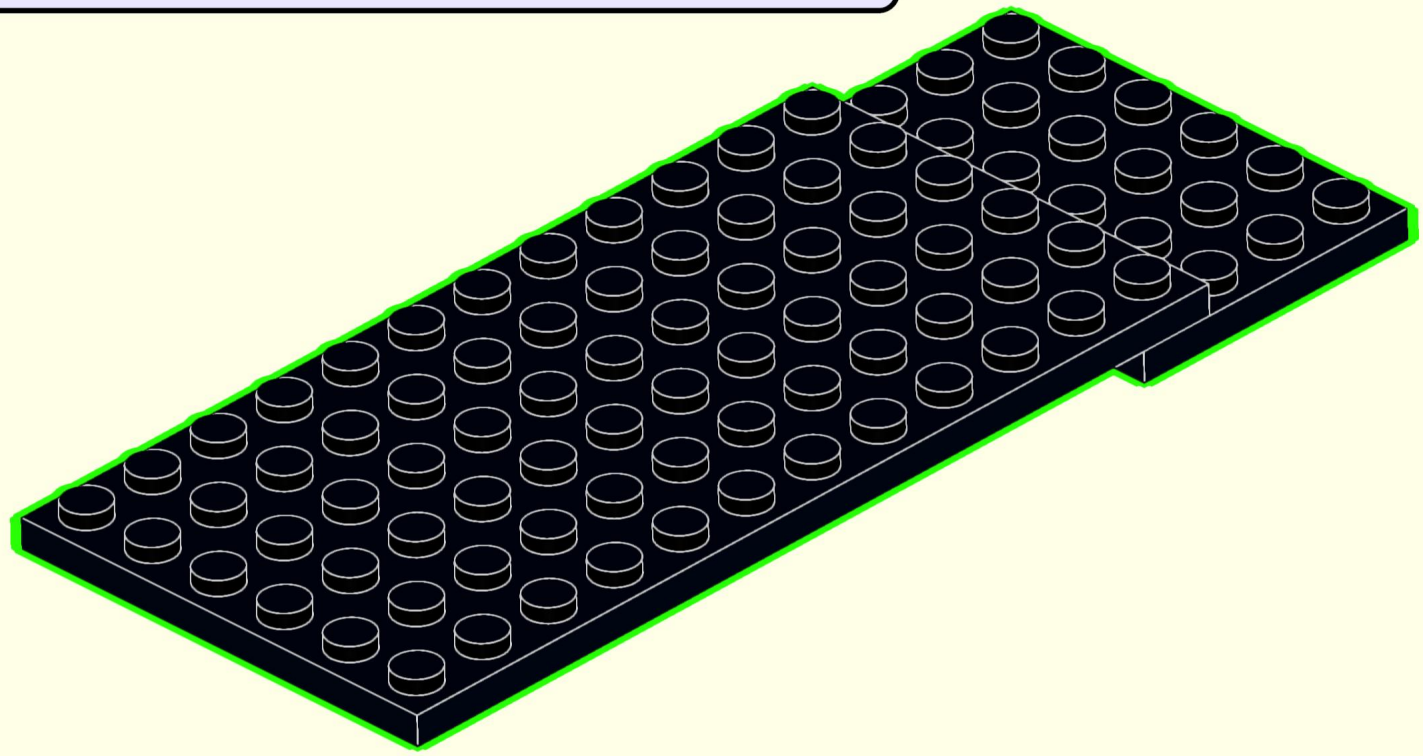

3

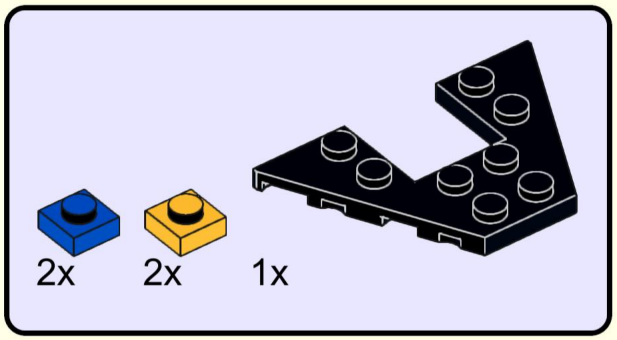

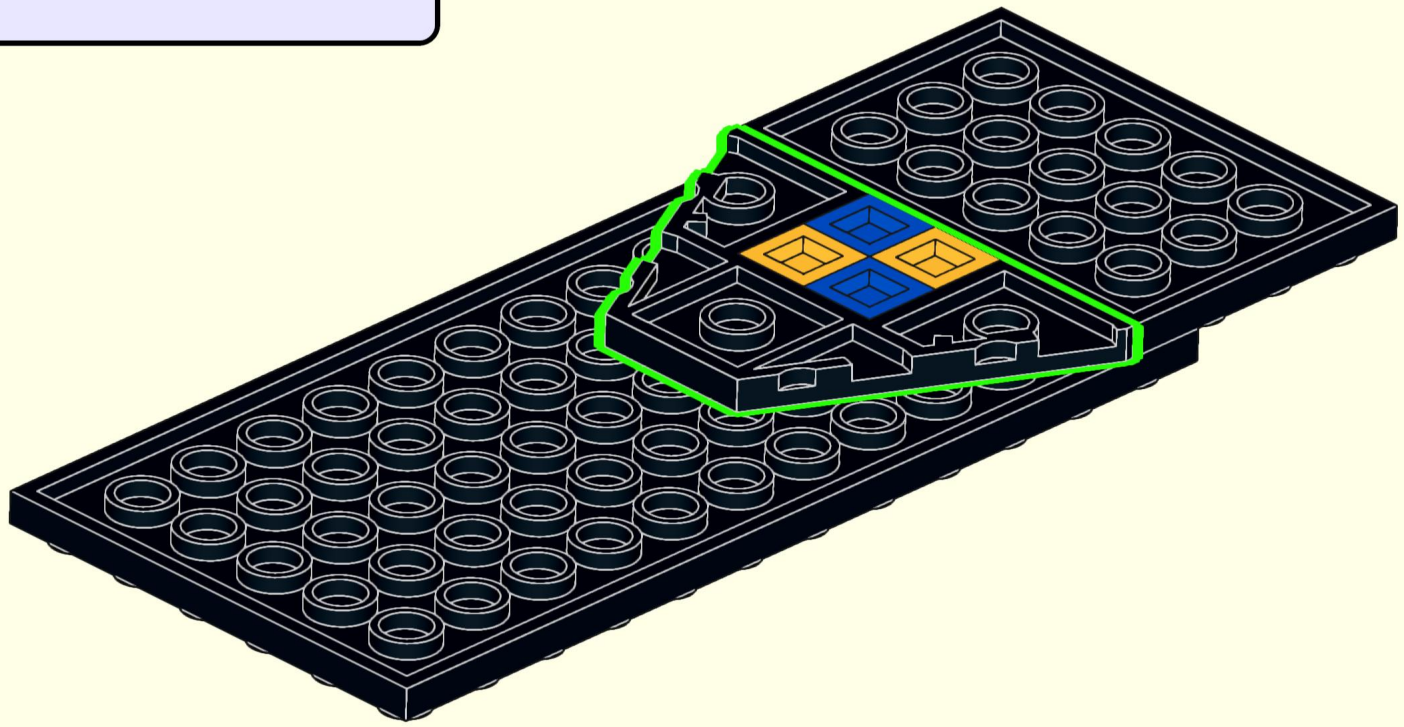

4

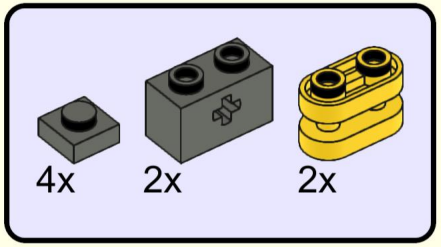

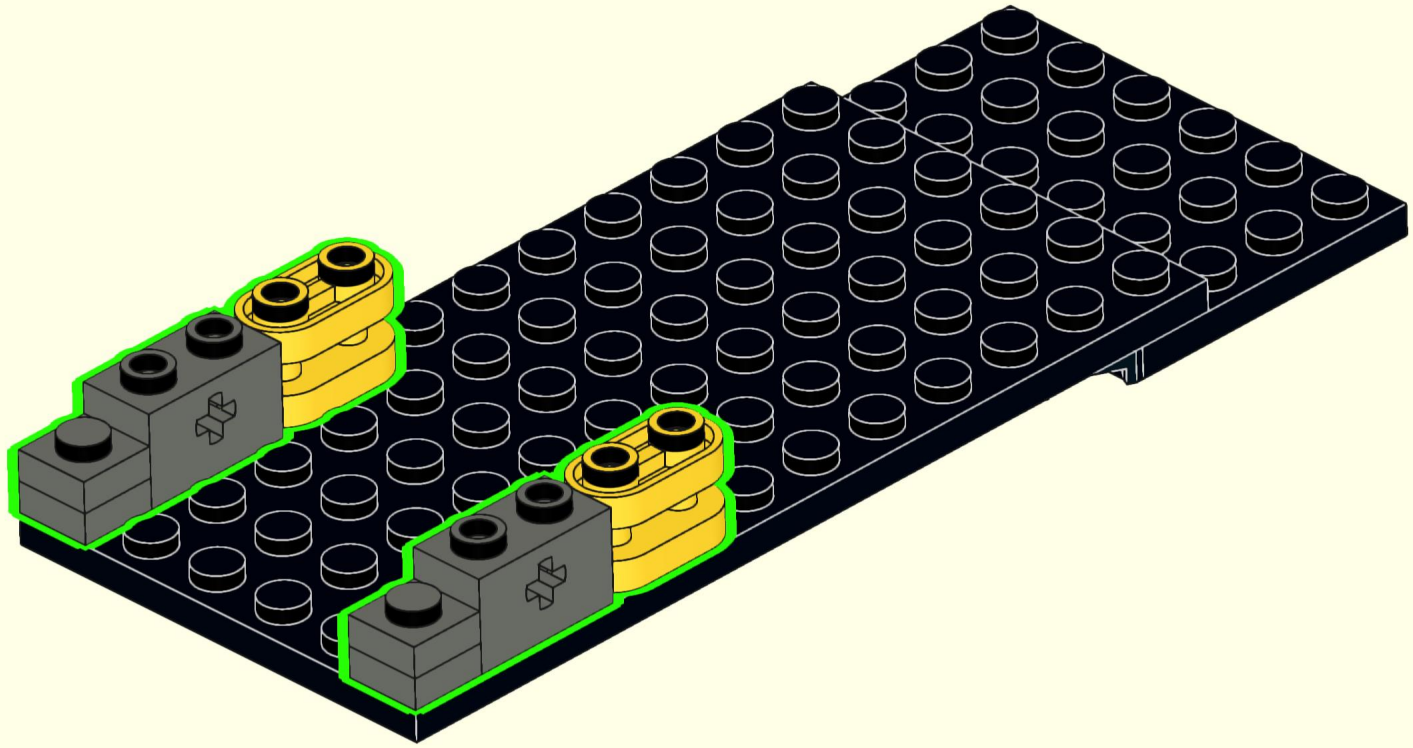

5

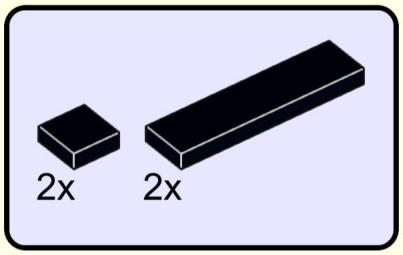

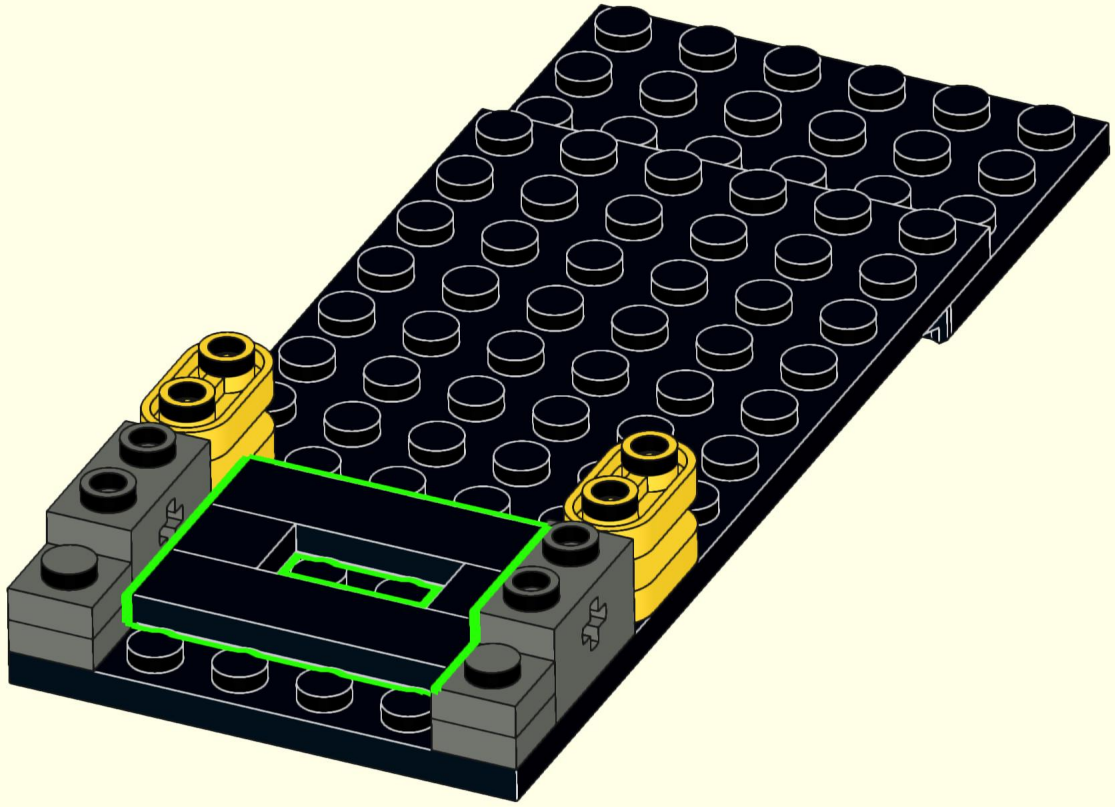

6

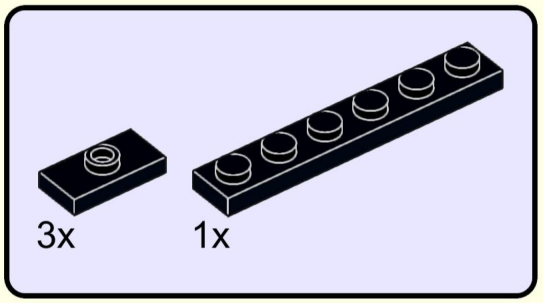

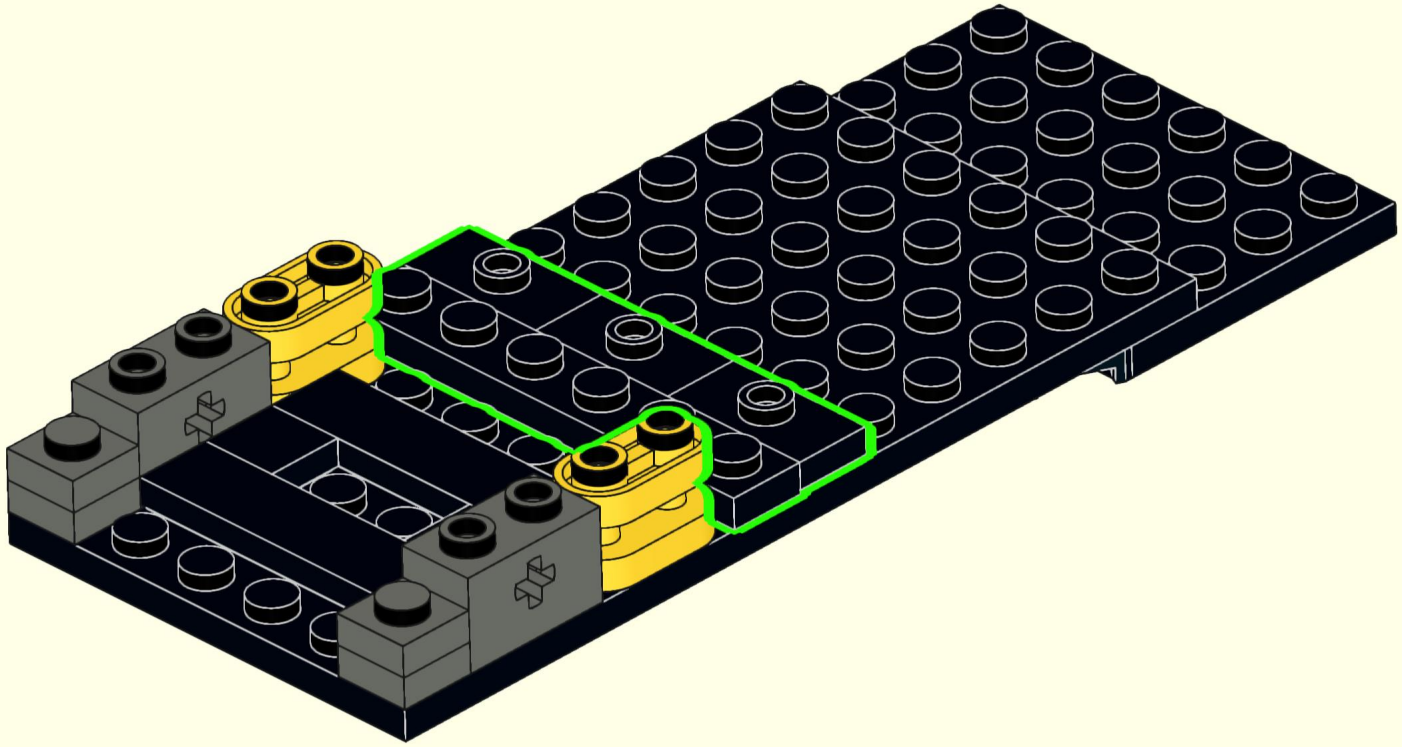

7

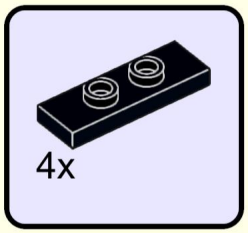

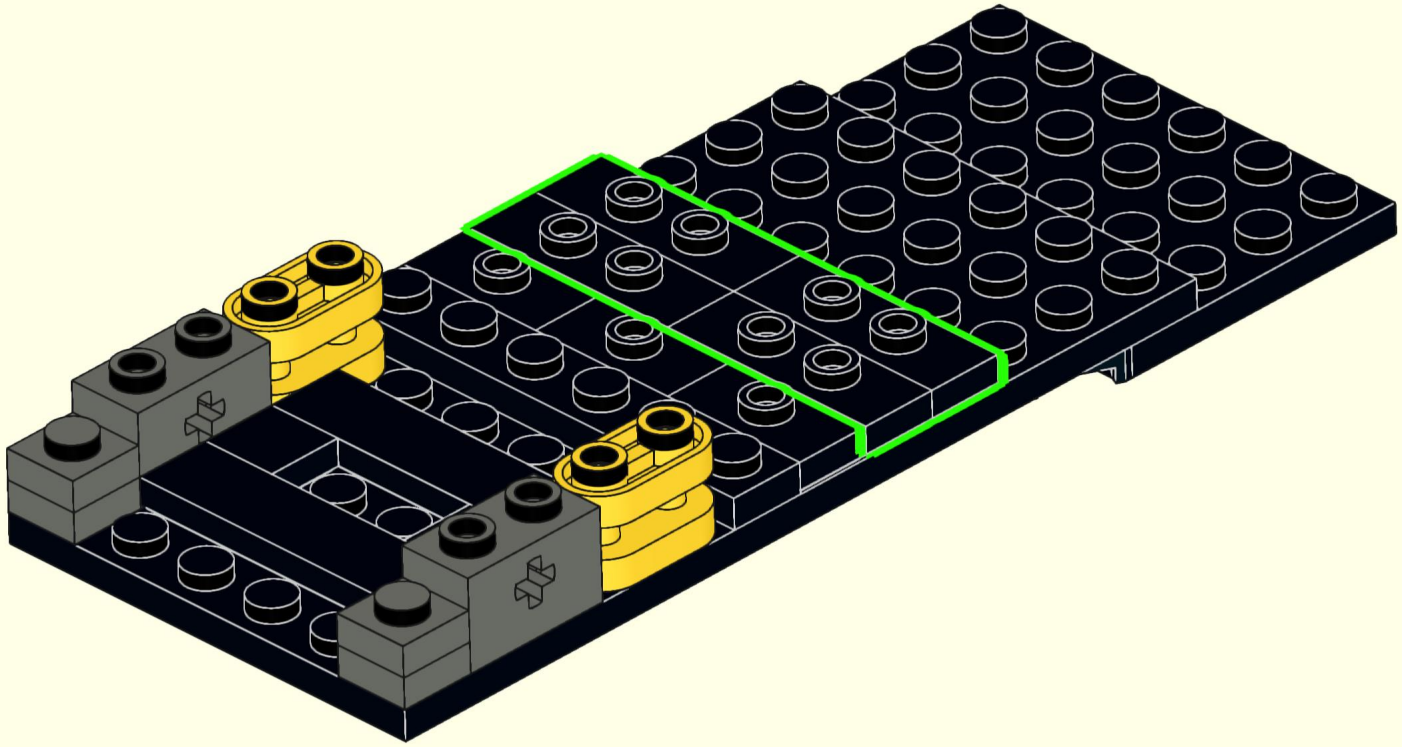

8

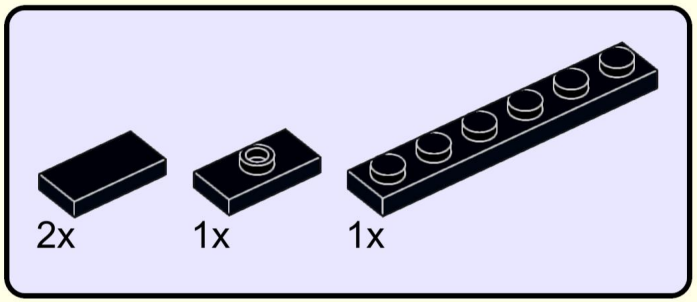

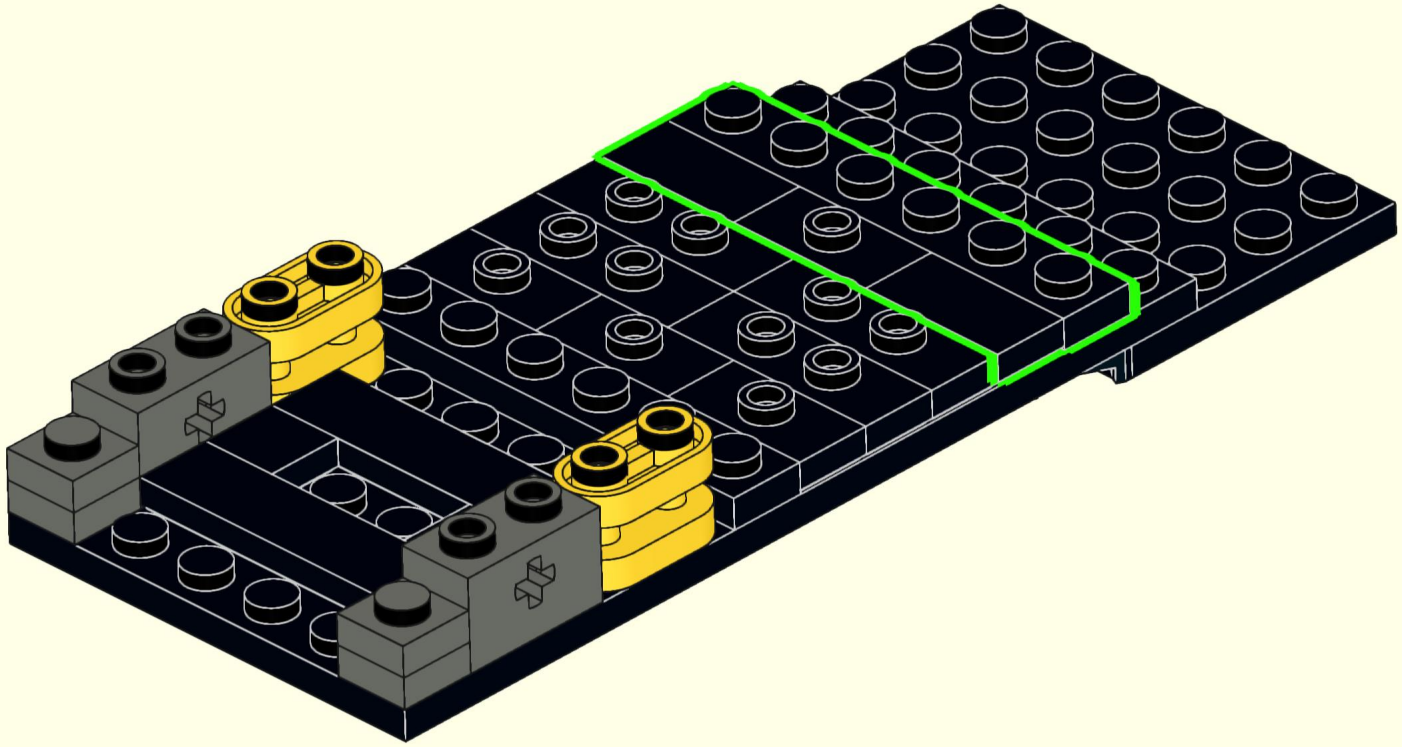

9

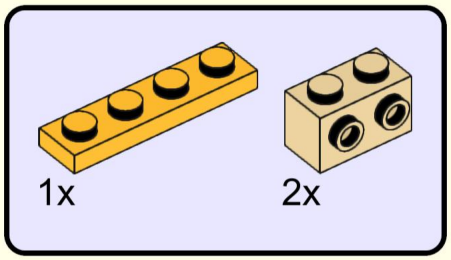

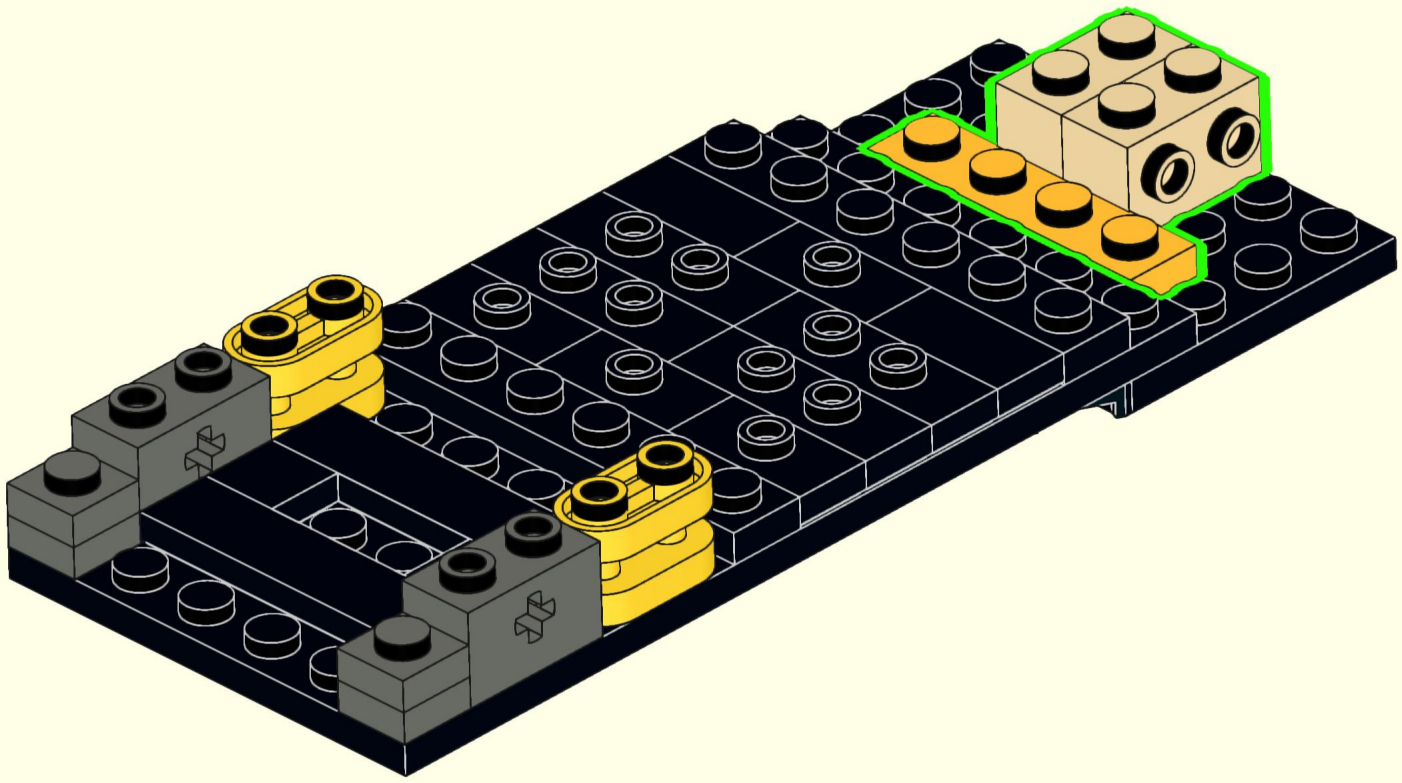

10

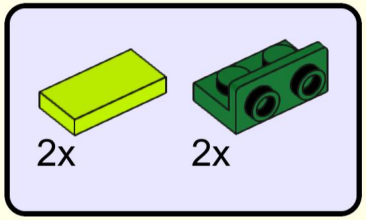

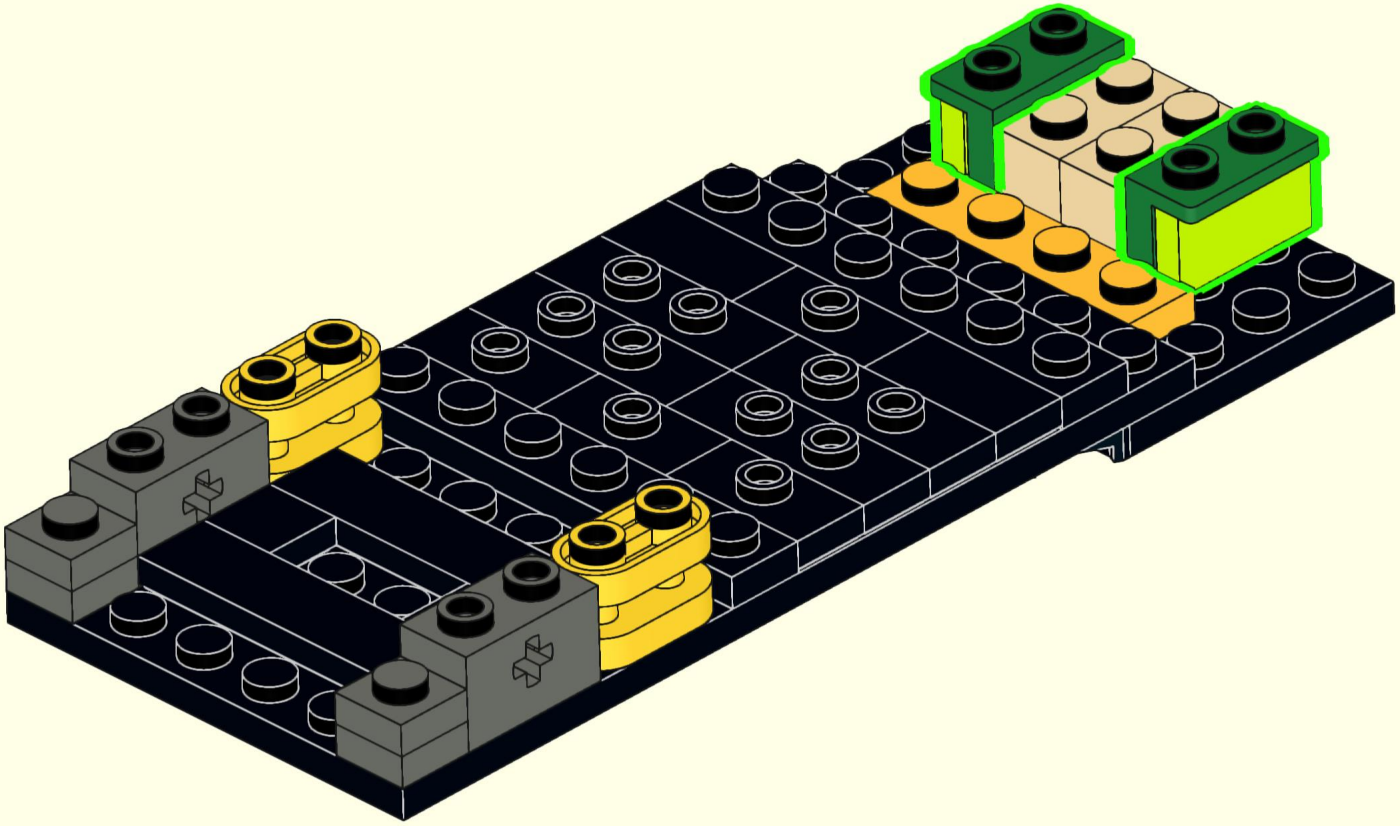

11

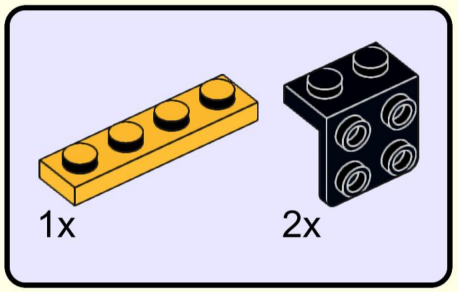

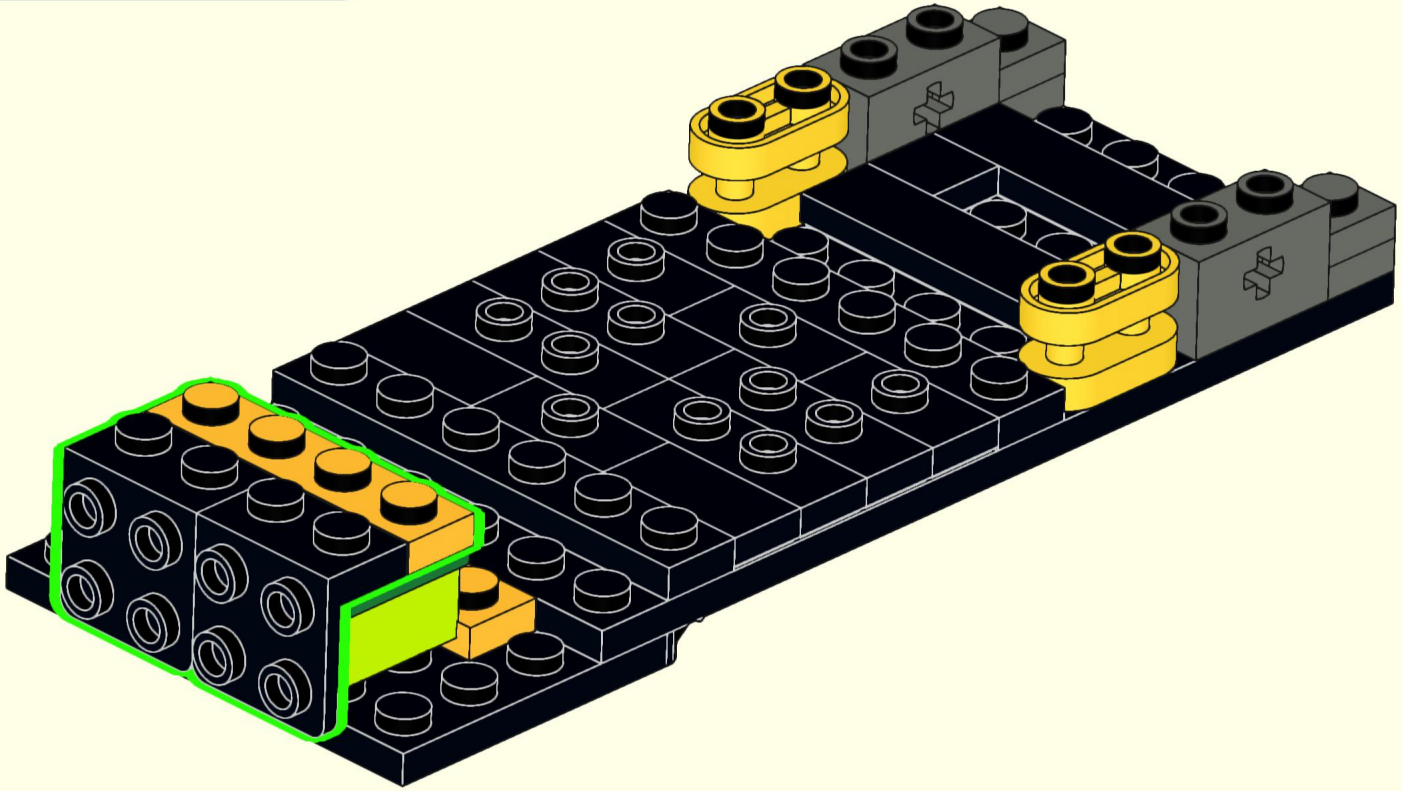

12

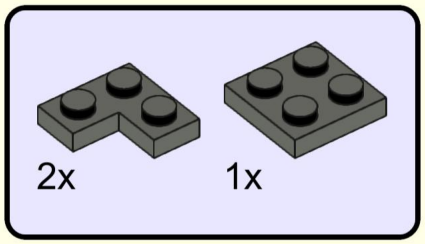

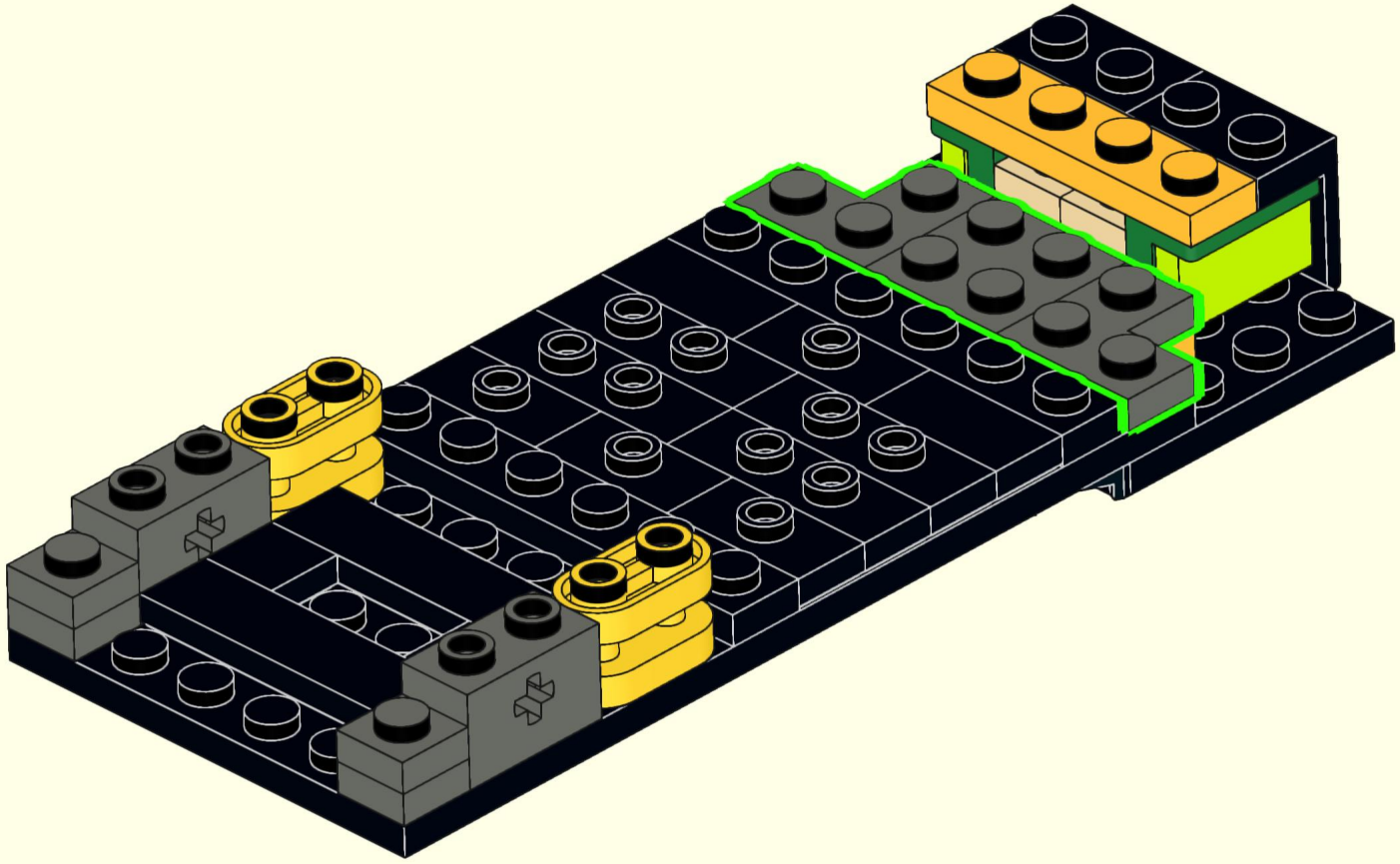

13

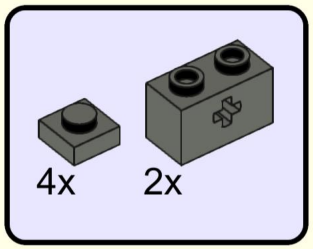

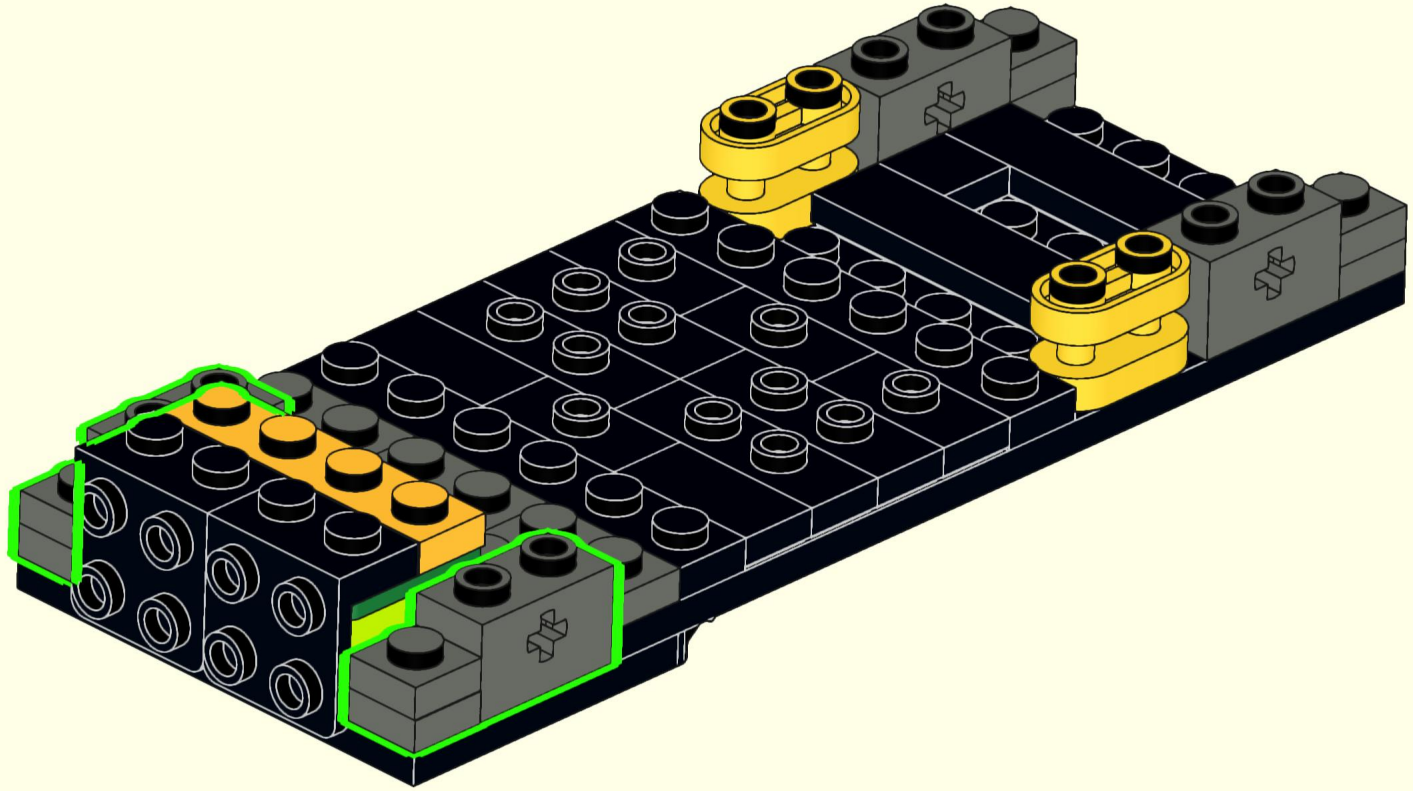

14

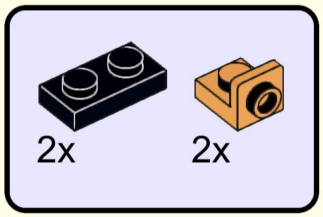

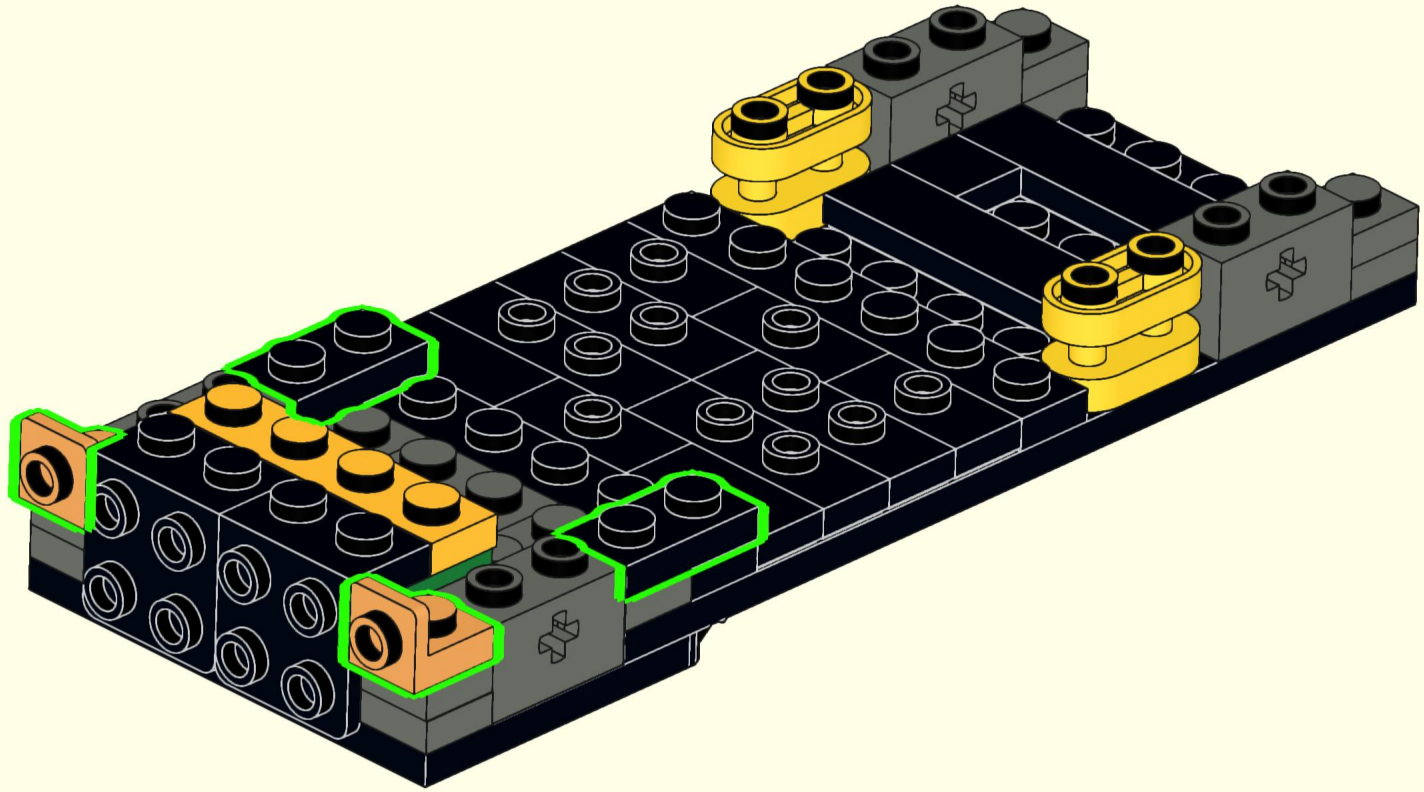

15

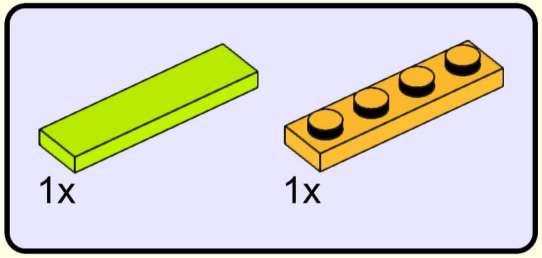

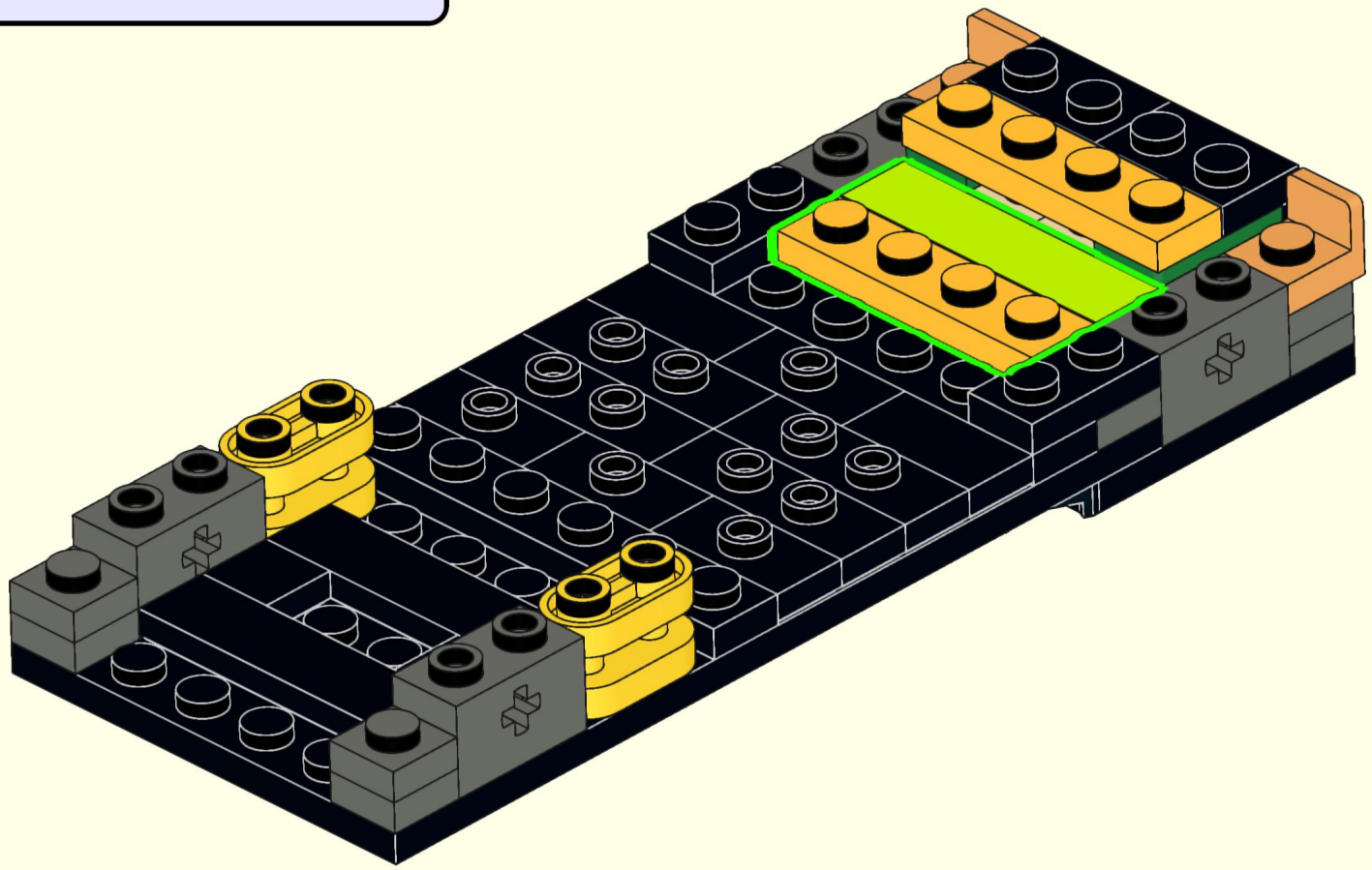

16

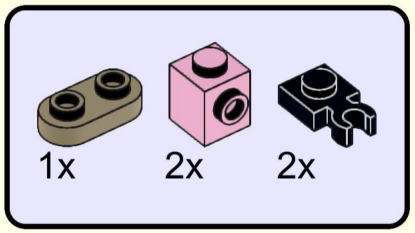

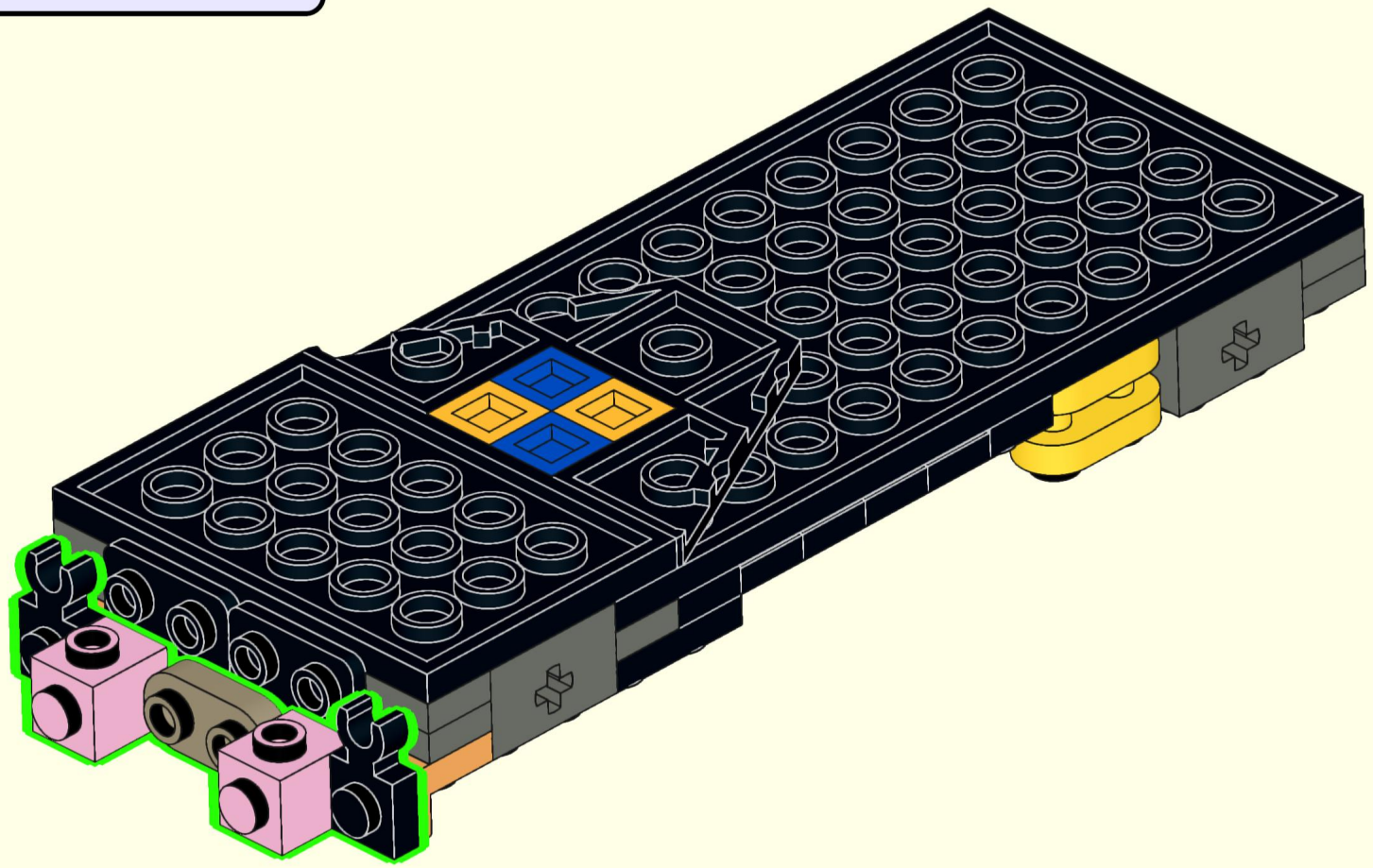

17

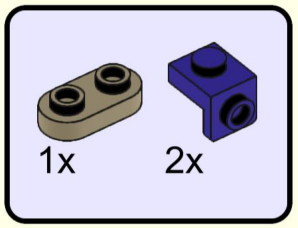

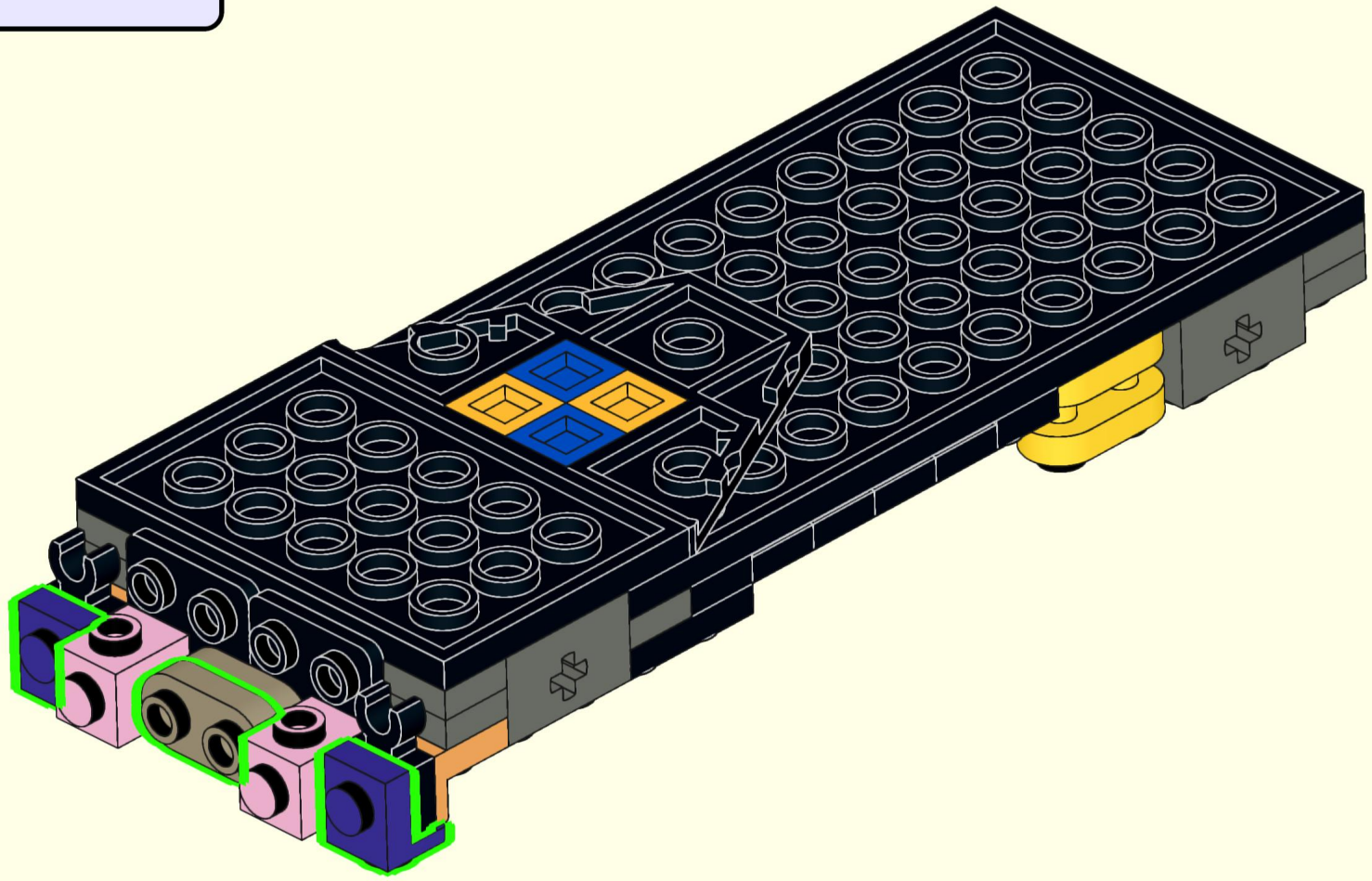

18

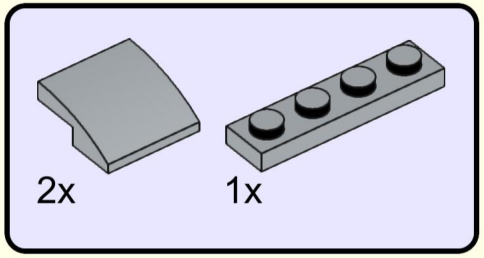

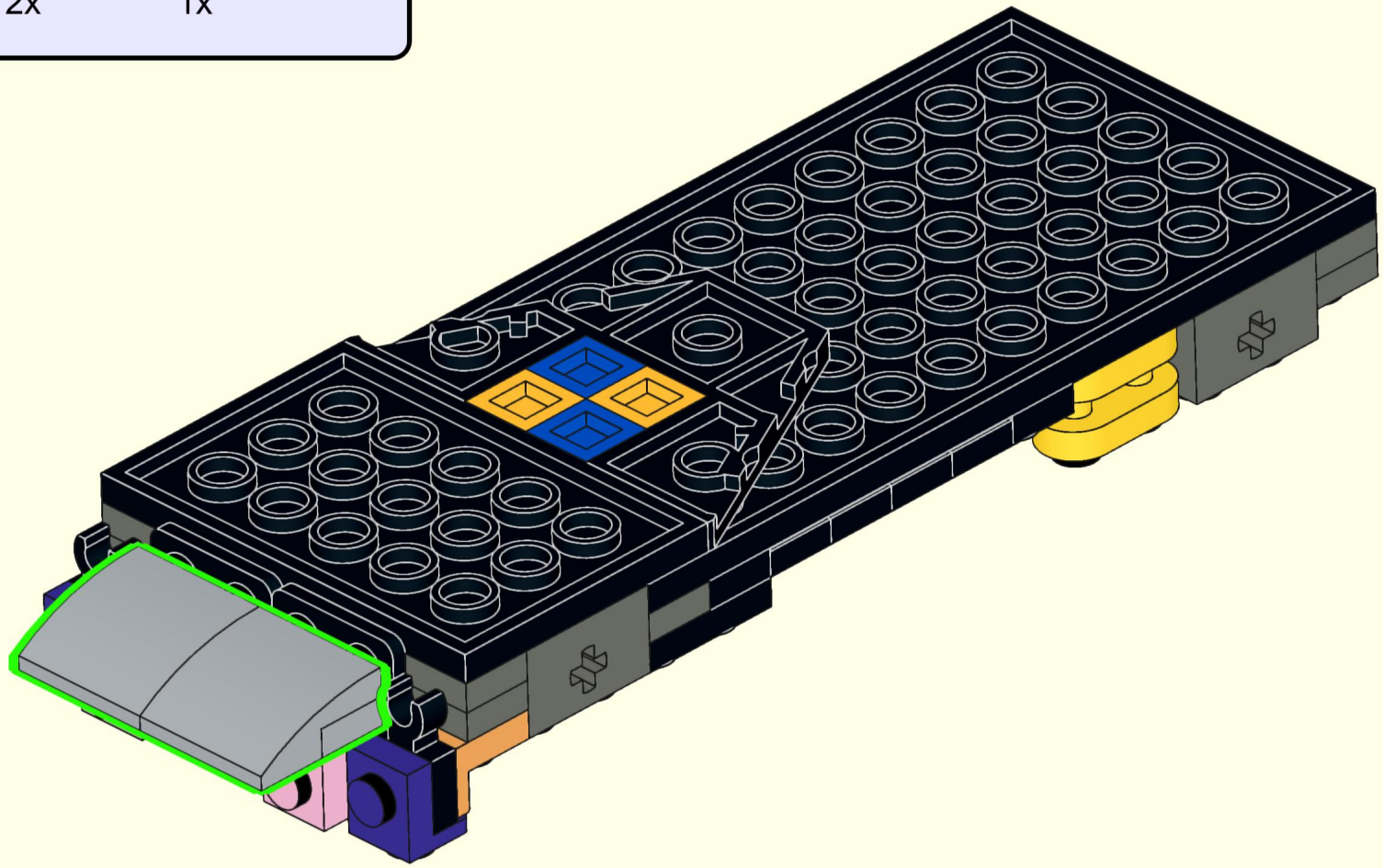

19

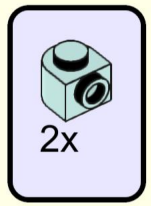

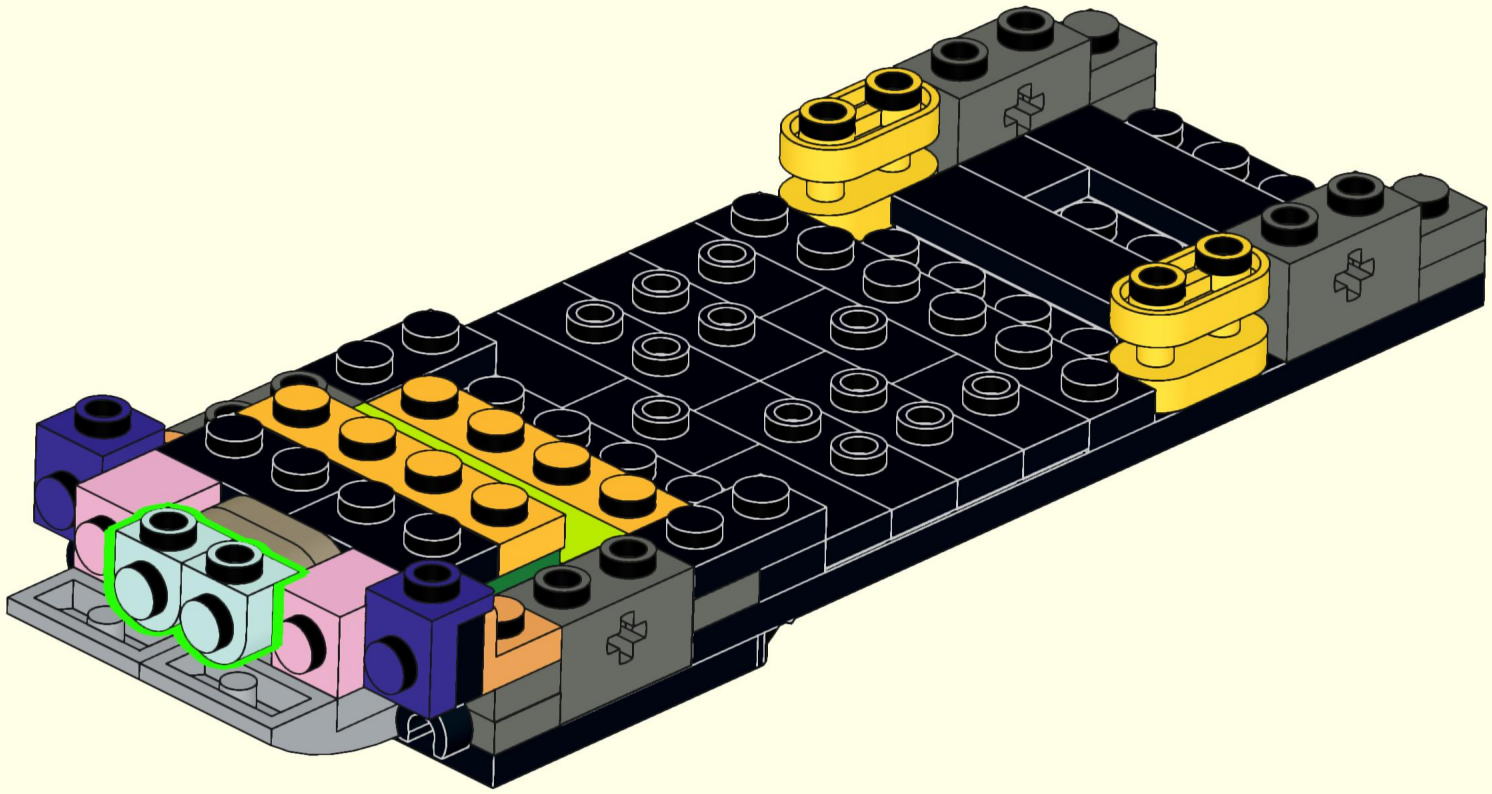

20

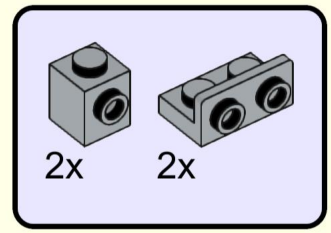

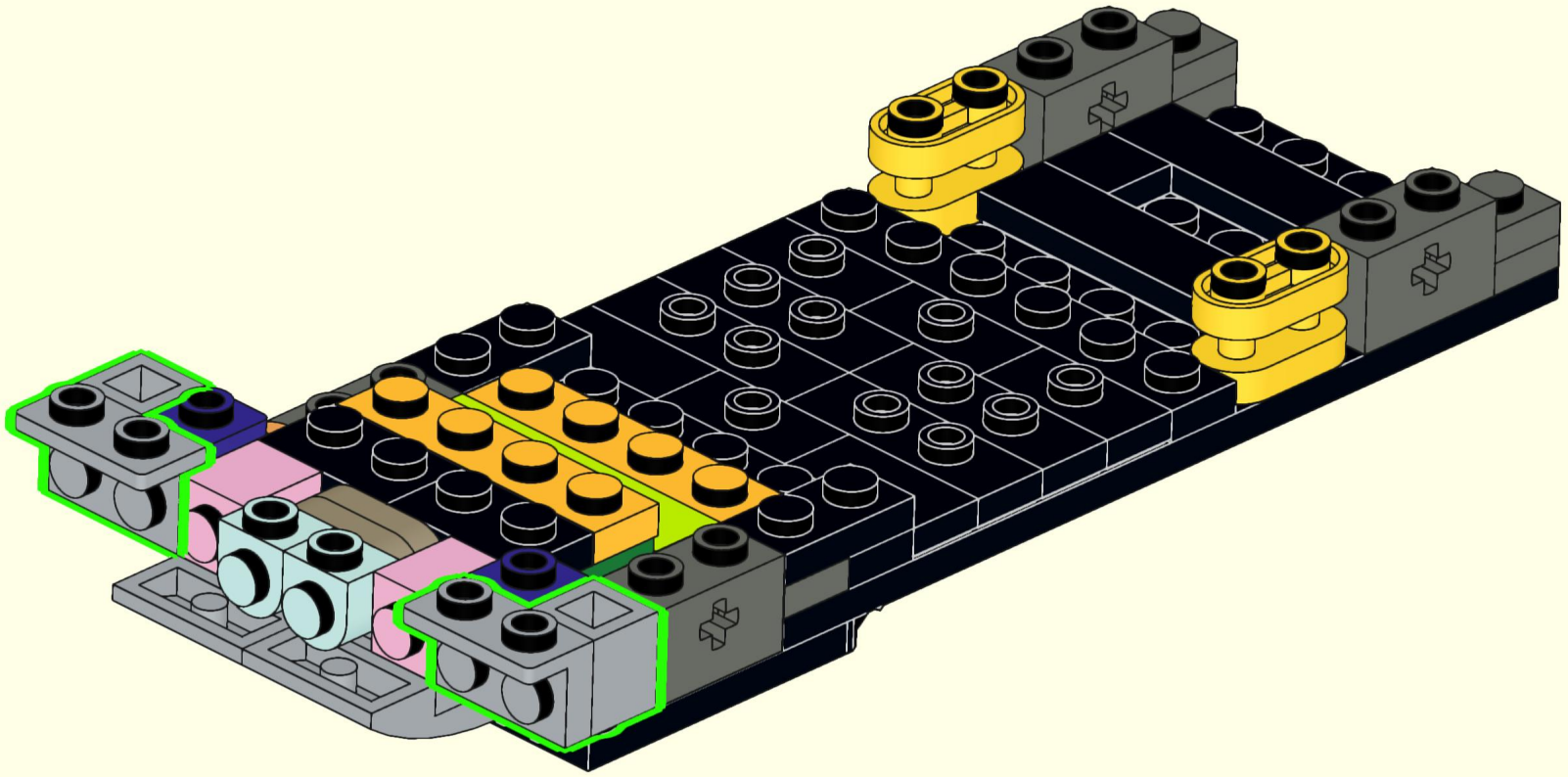

21

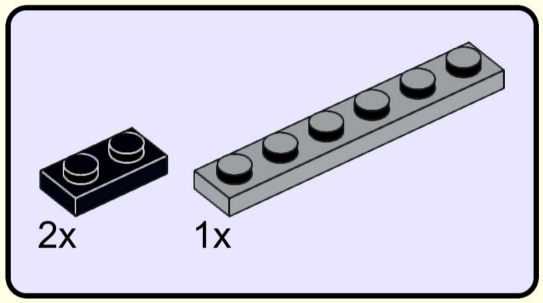

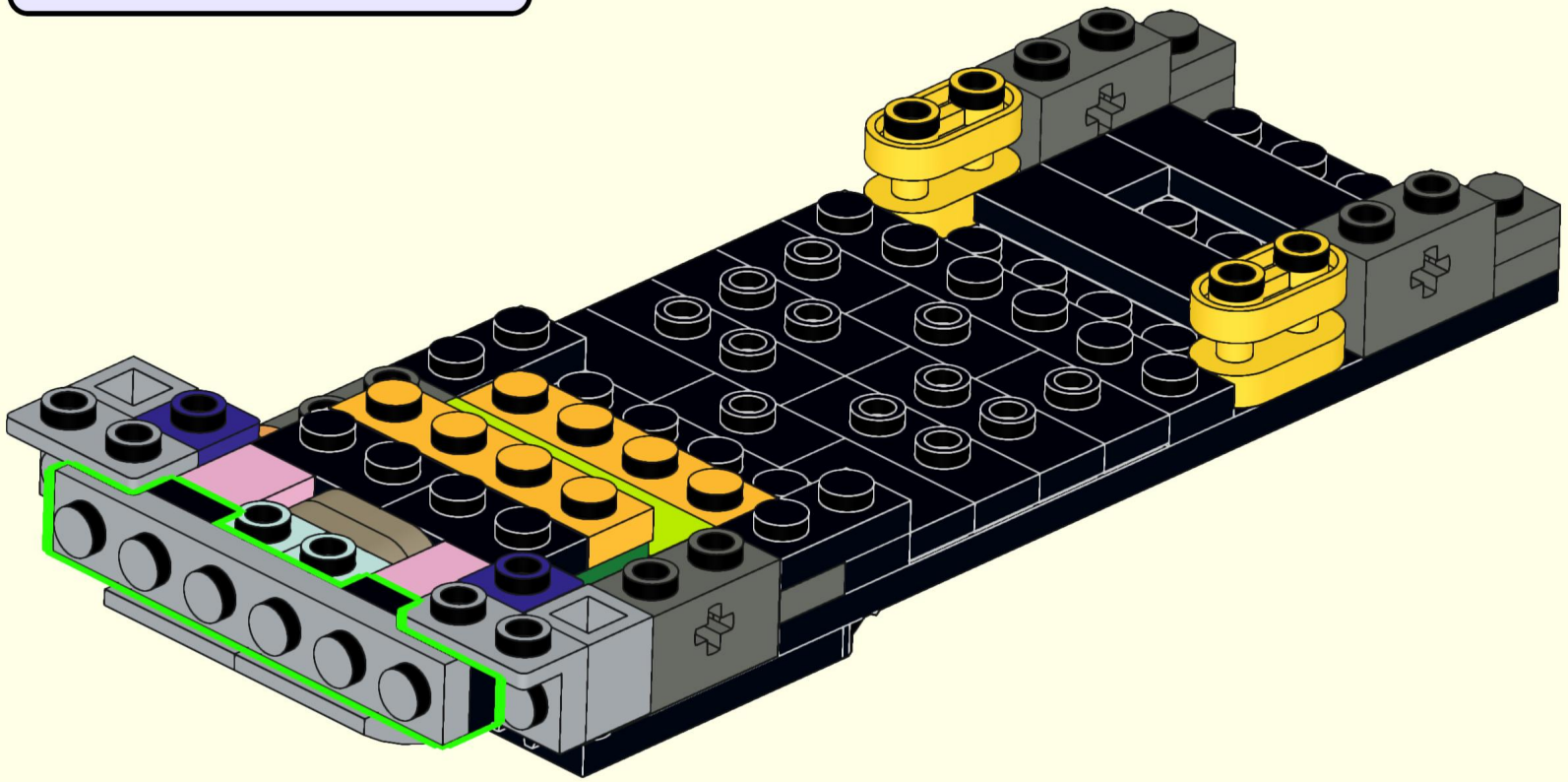

22

2x

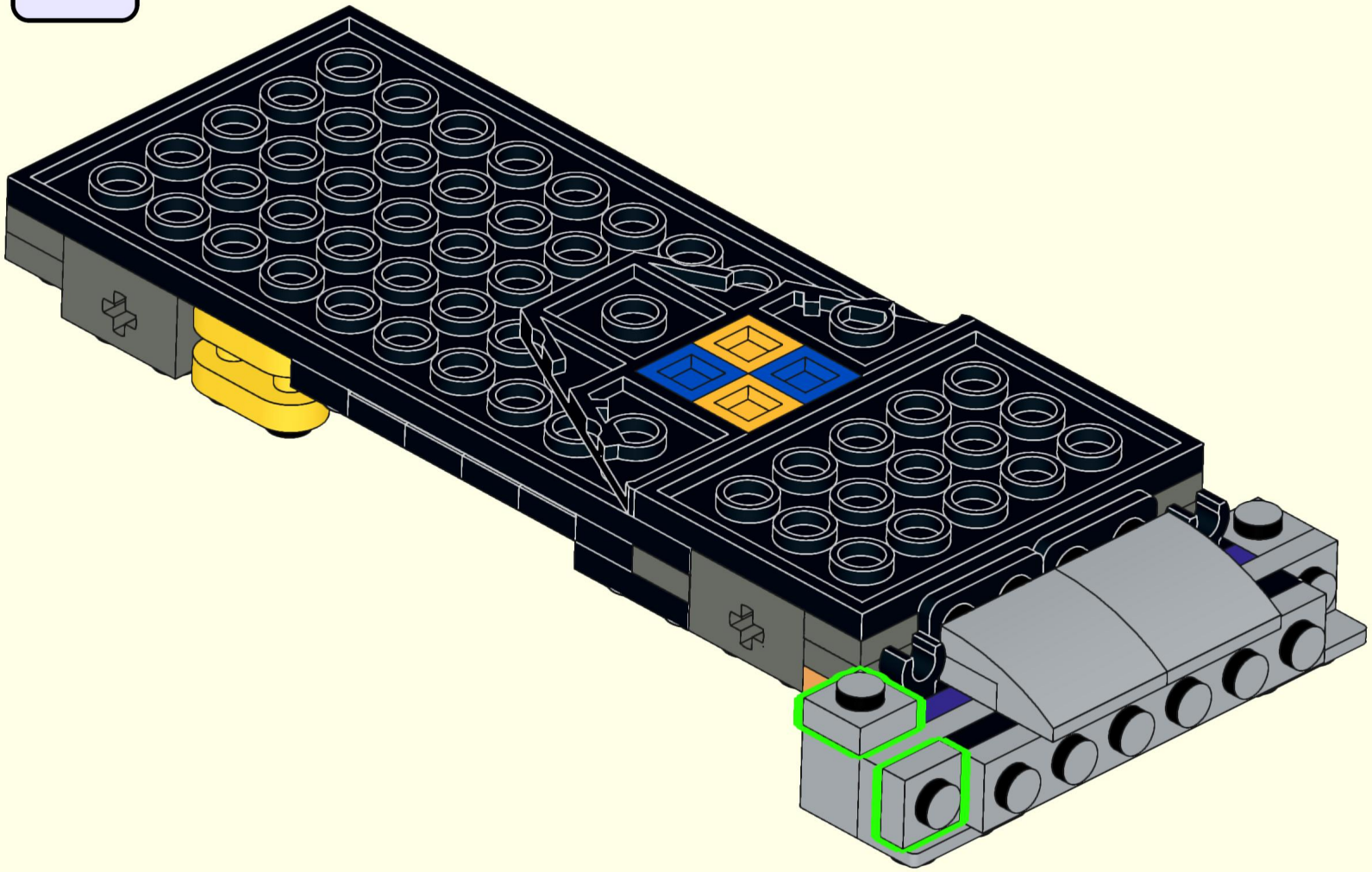

23

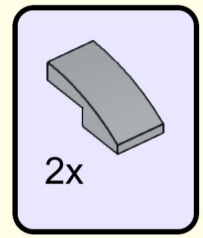

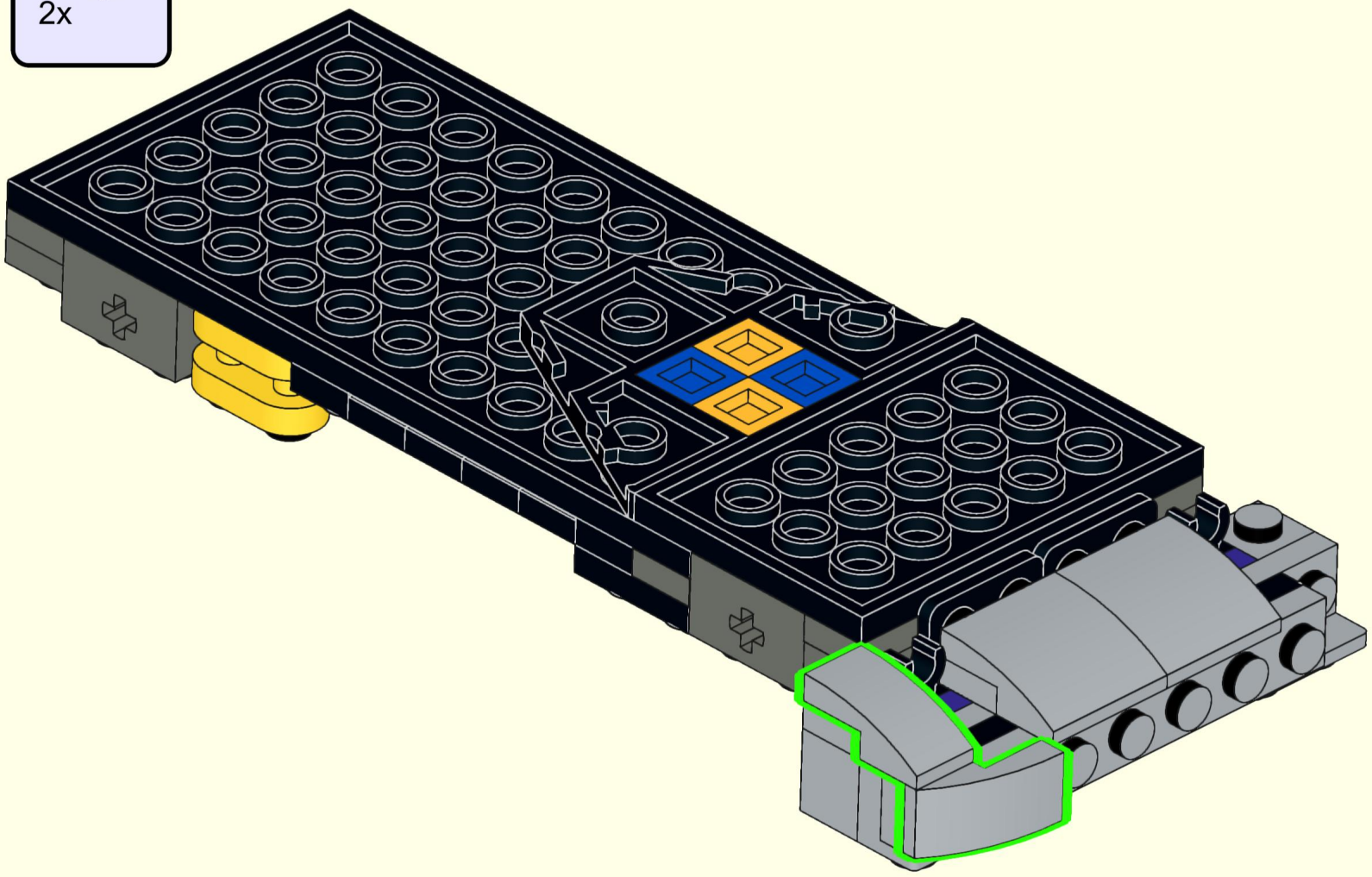

24

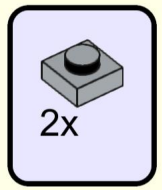

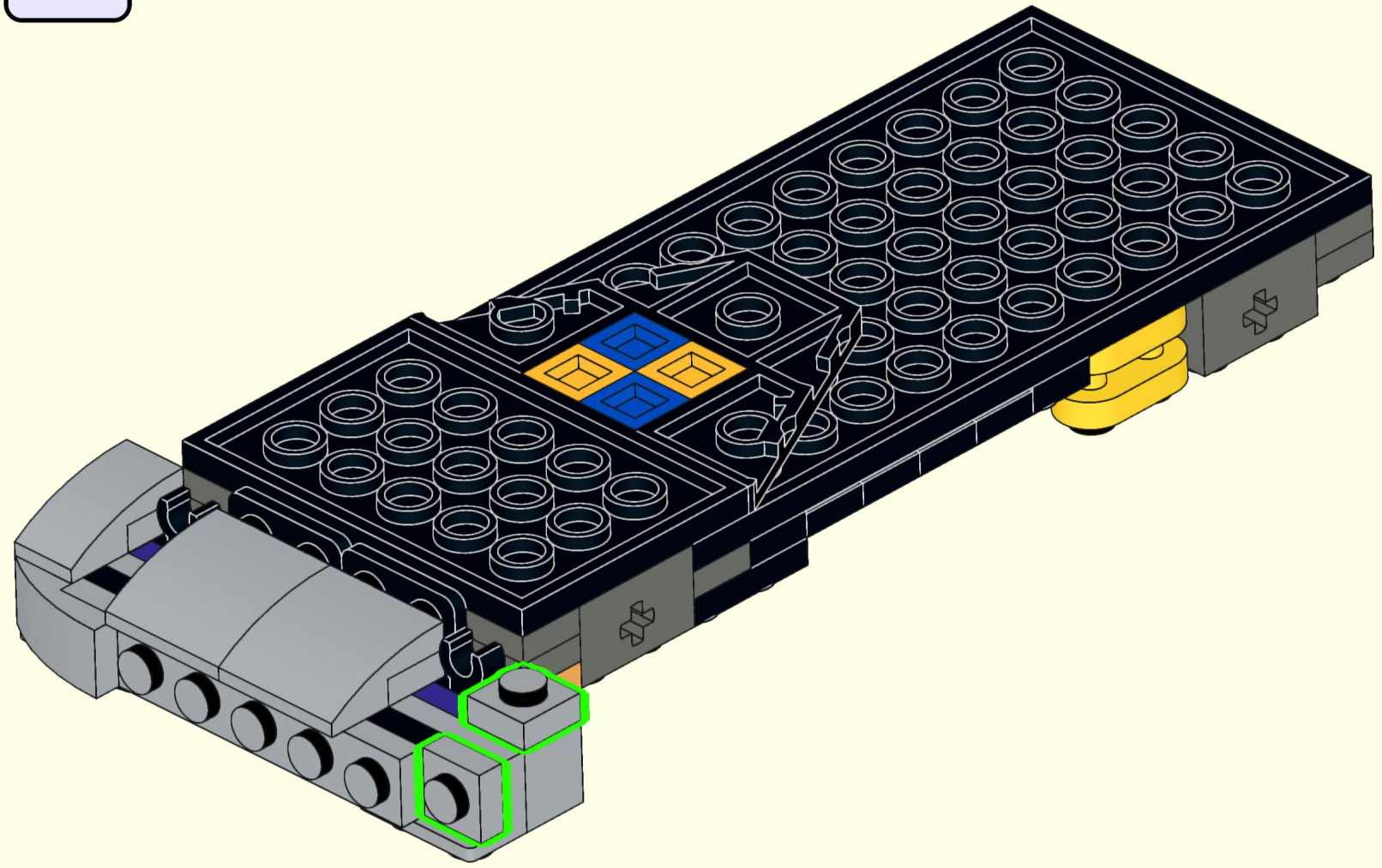

25

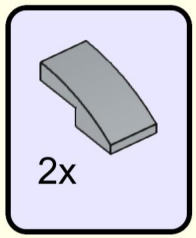

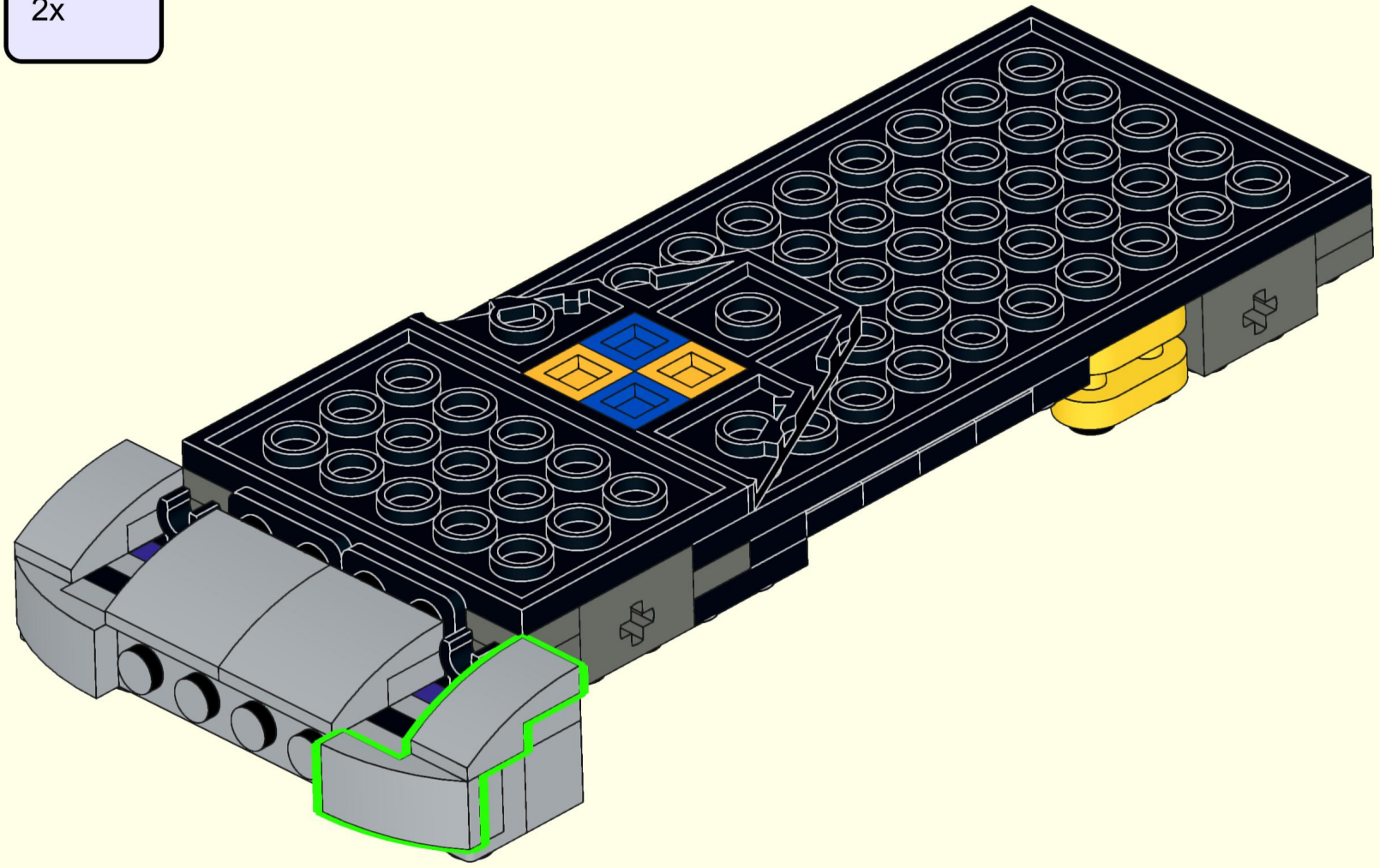

26

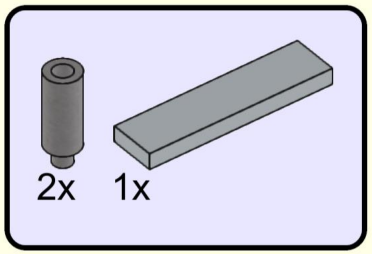

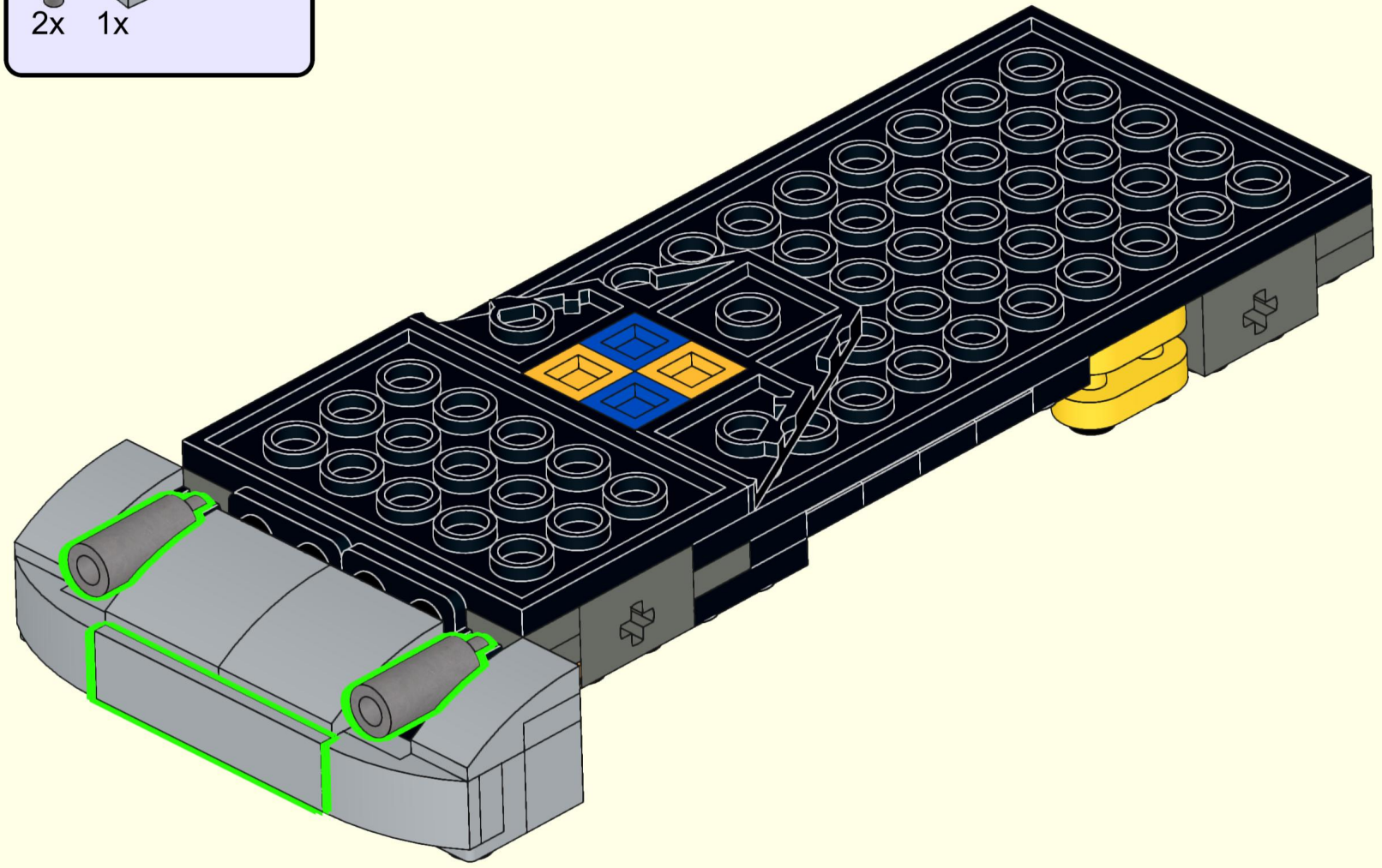

27

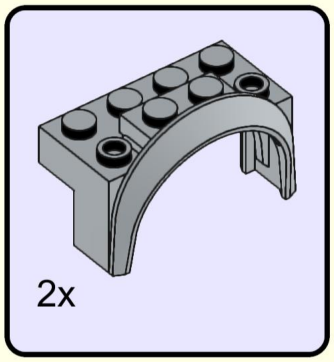

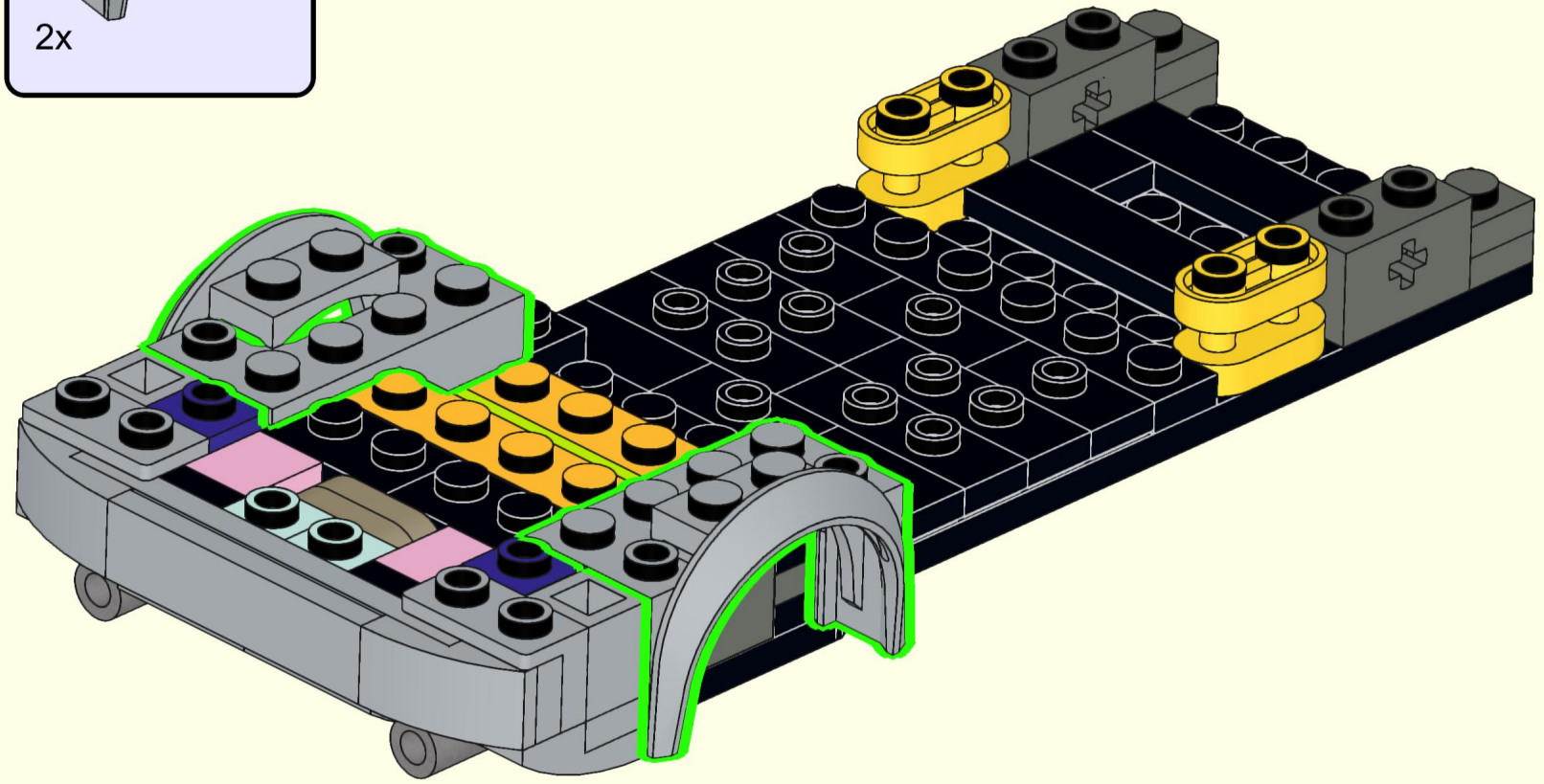

28

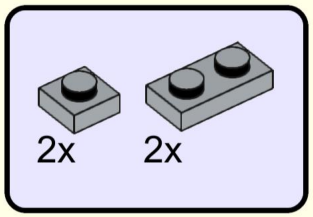

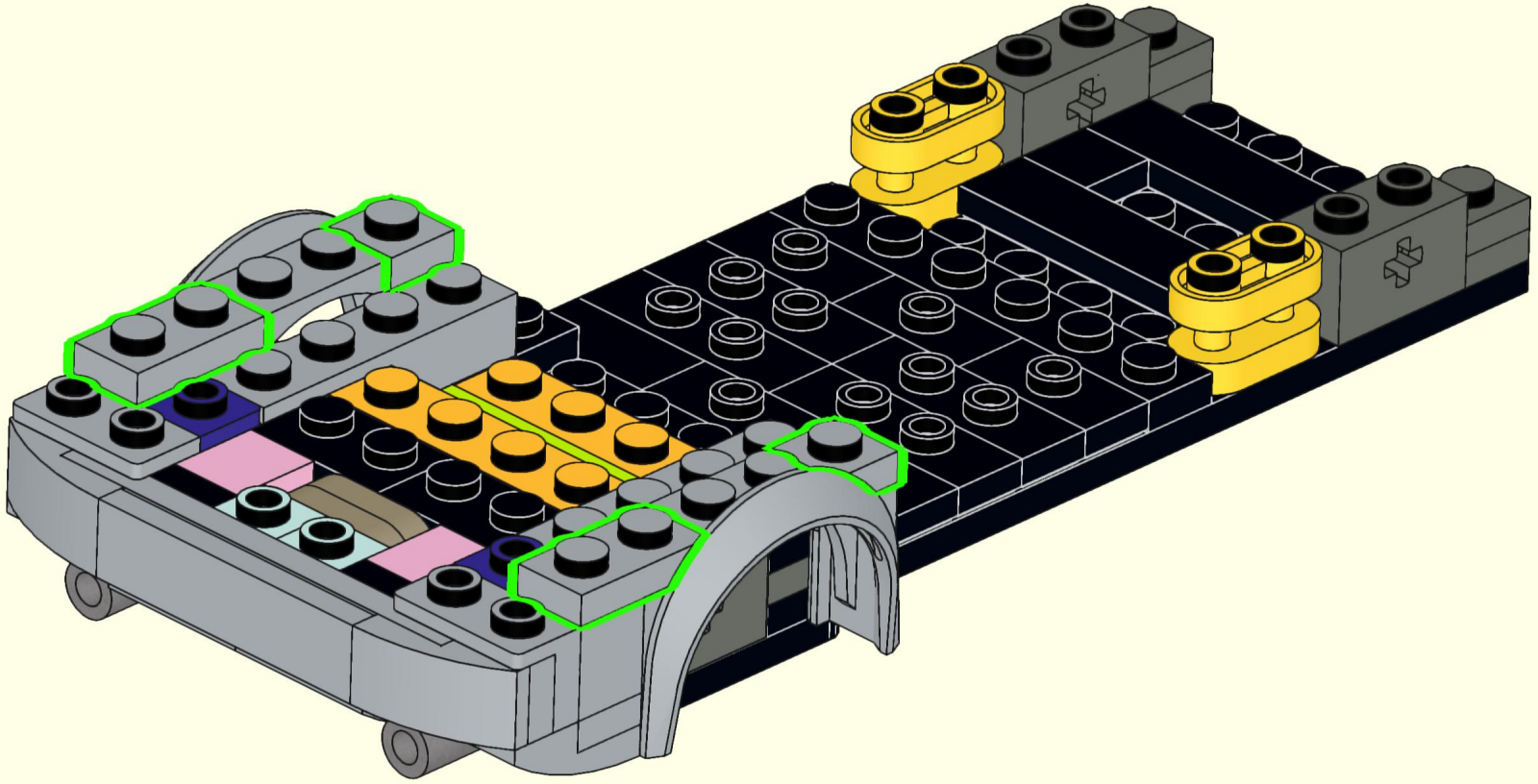

29

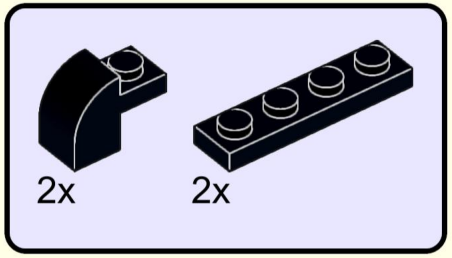

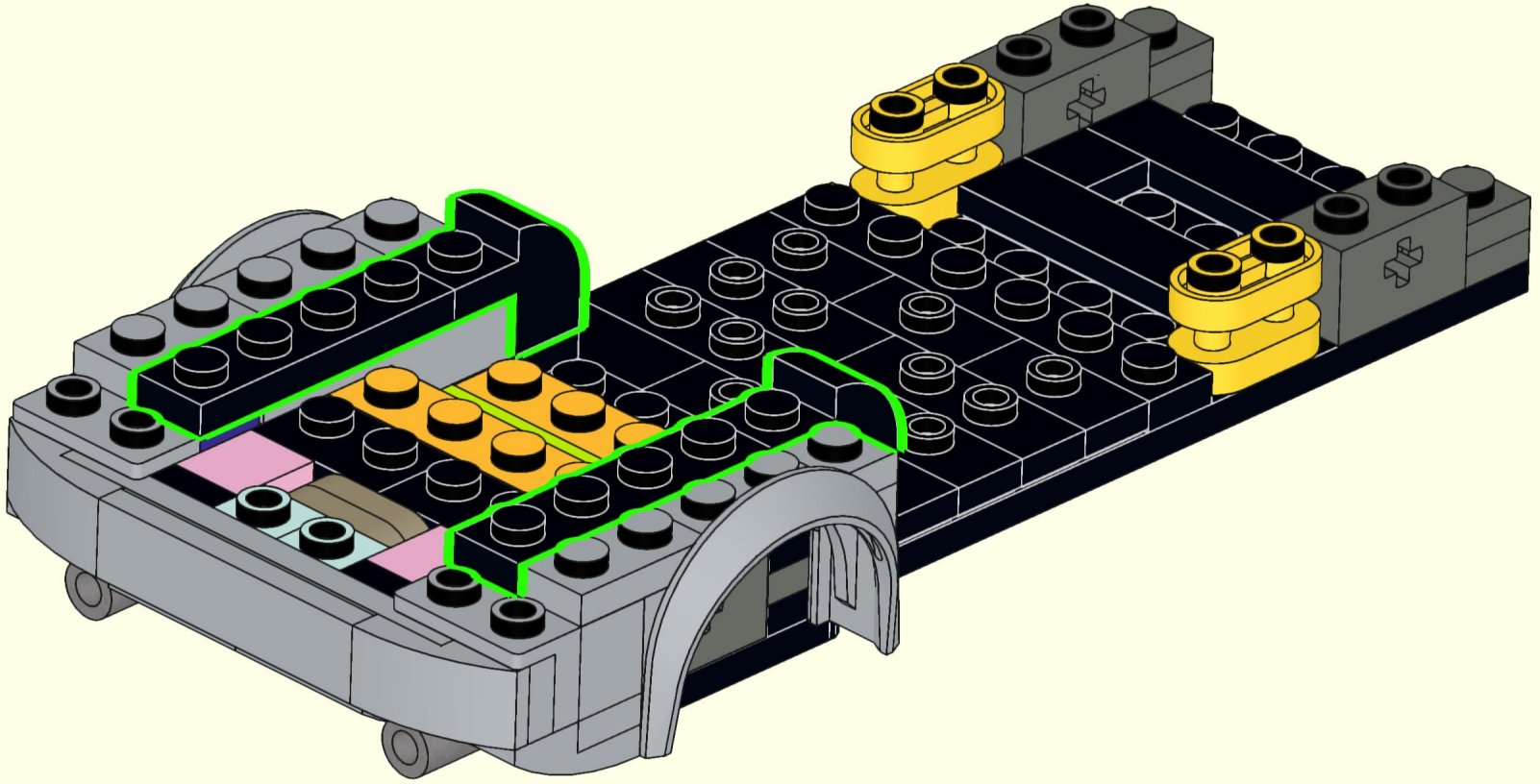

30

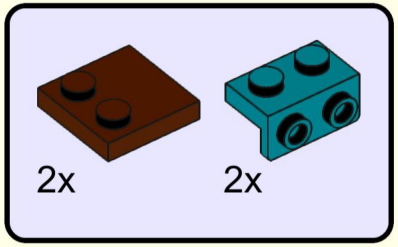

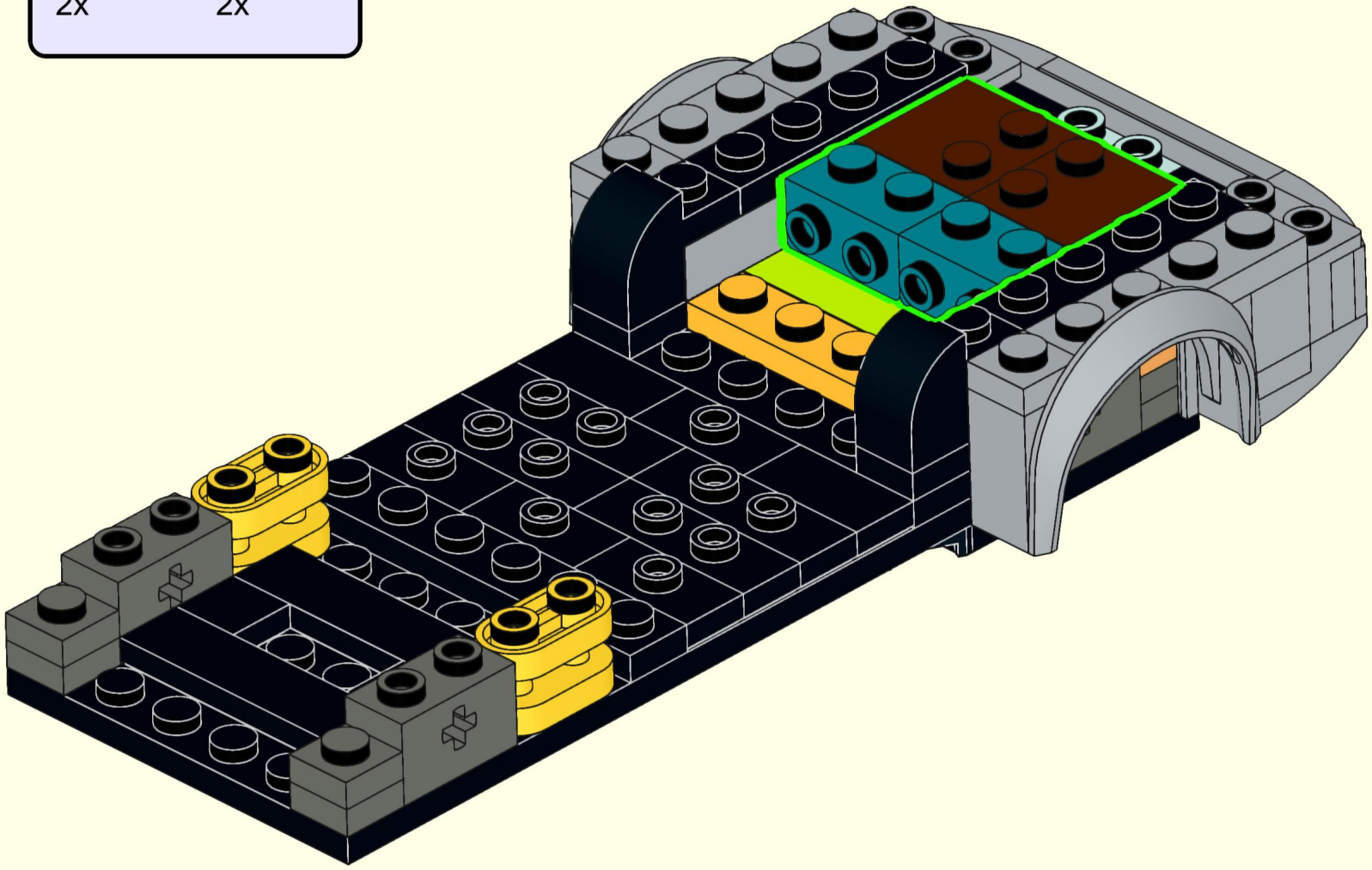

31

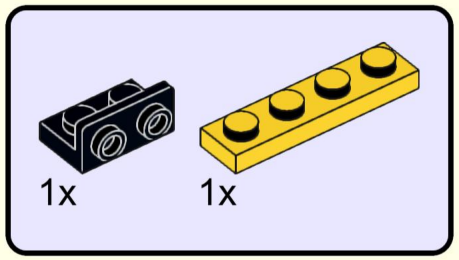

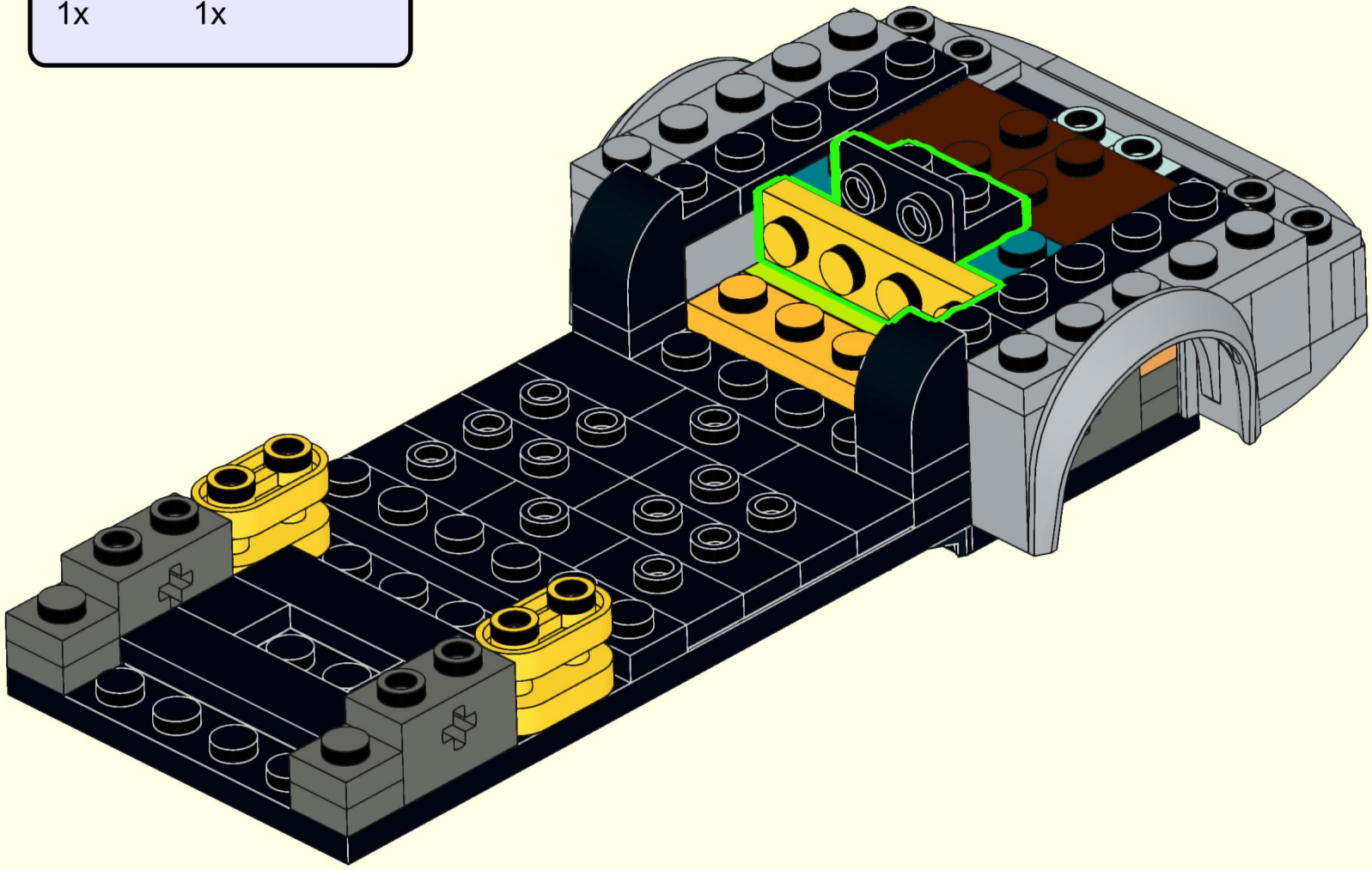

32

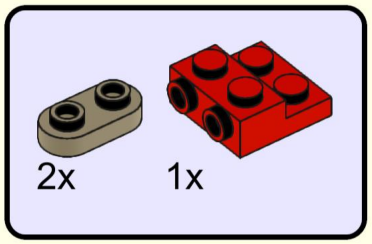

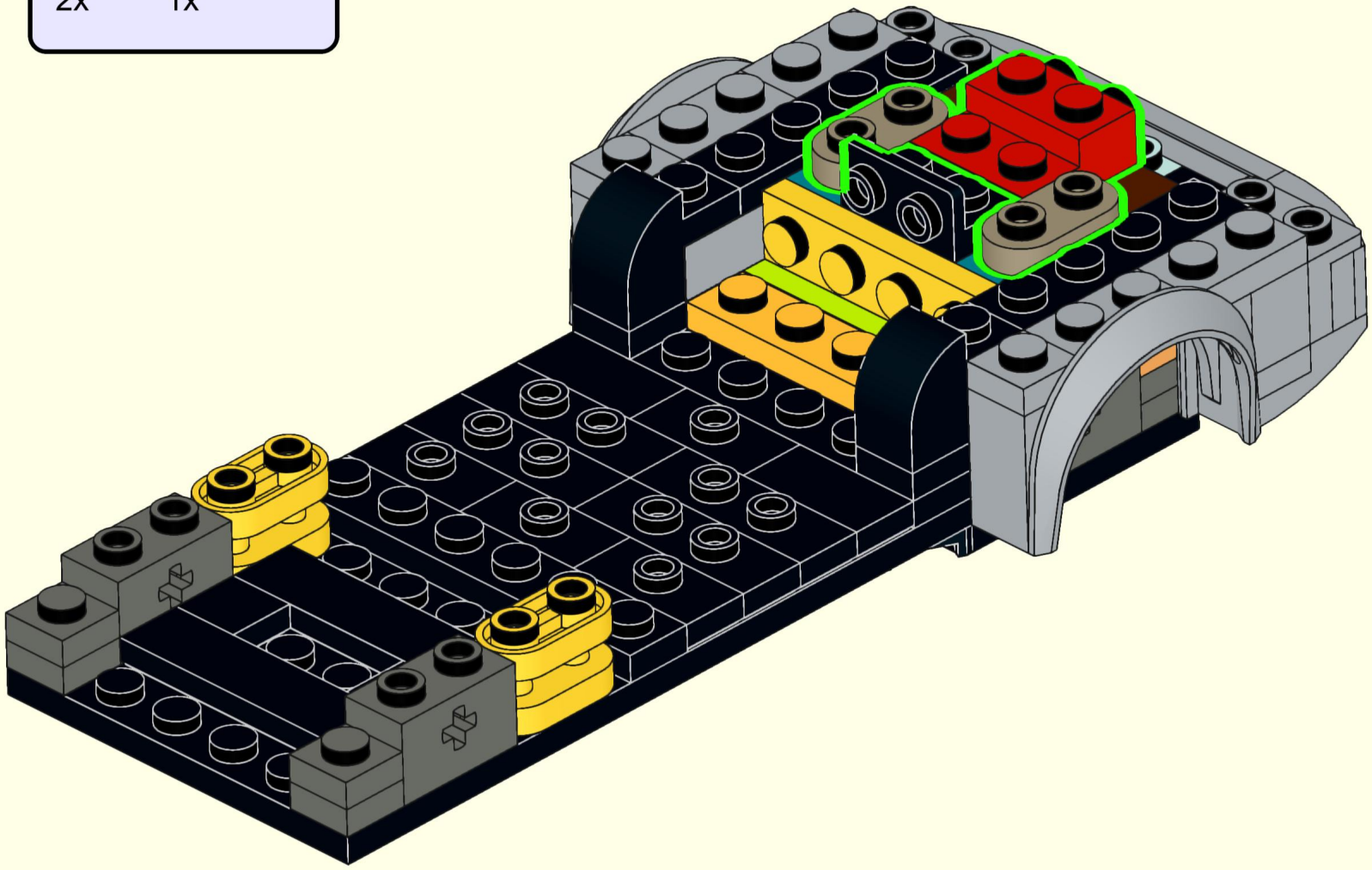

33

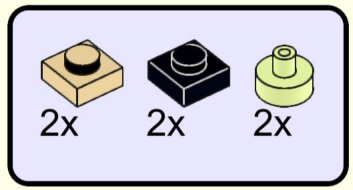

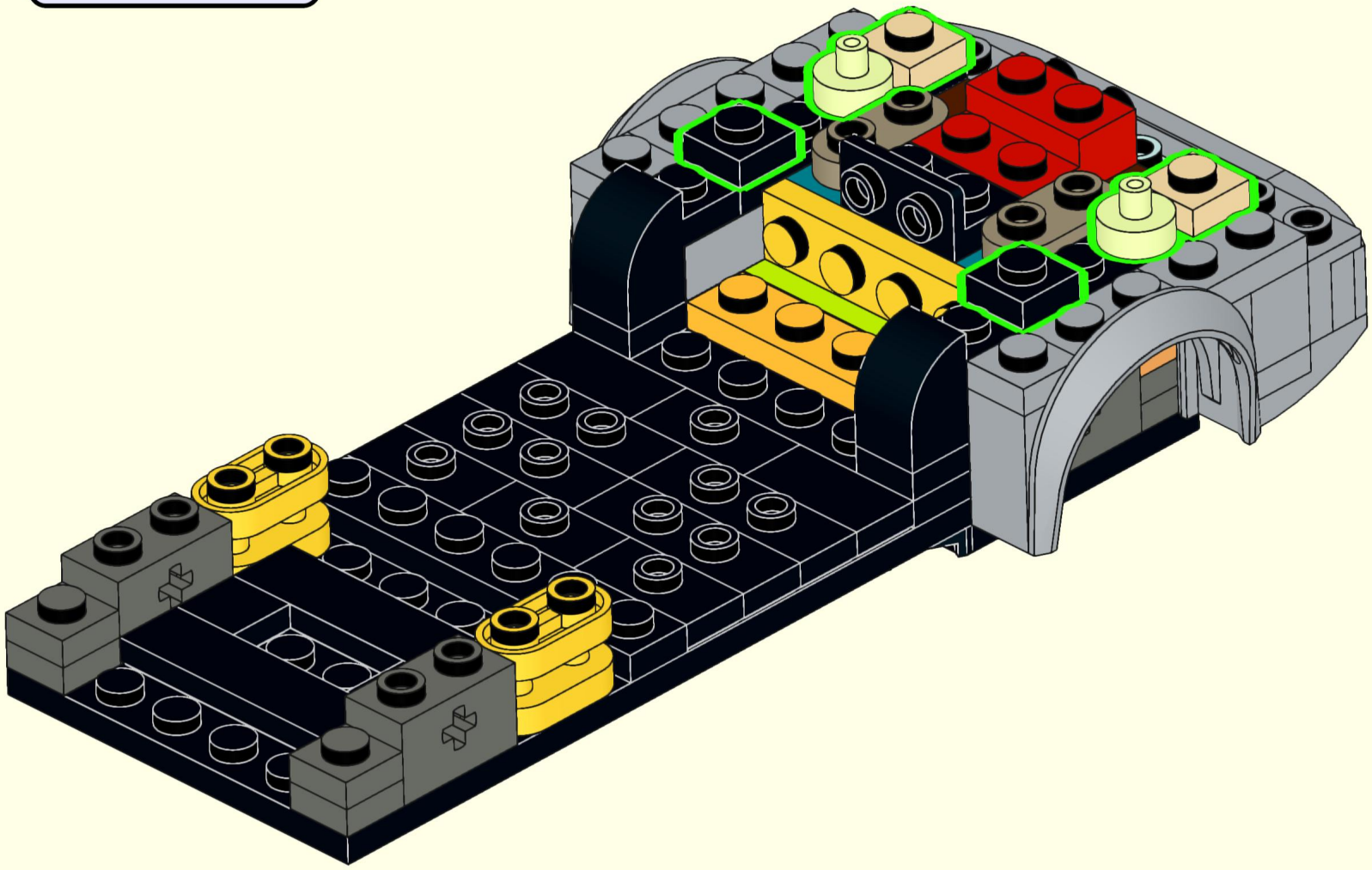

34

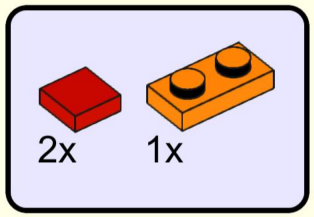

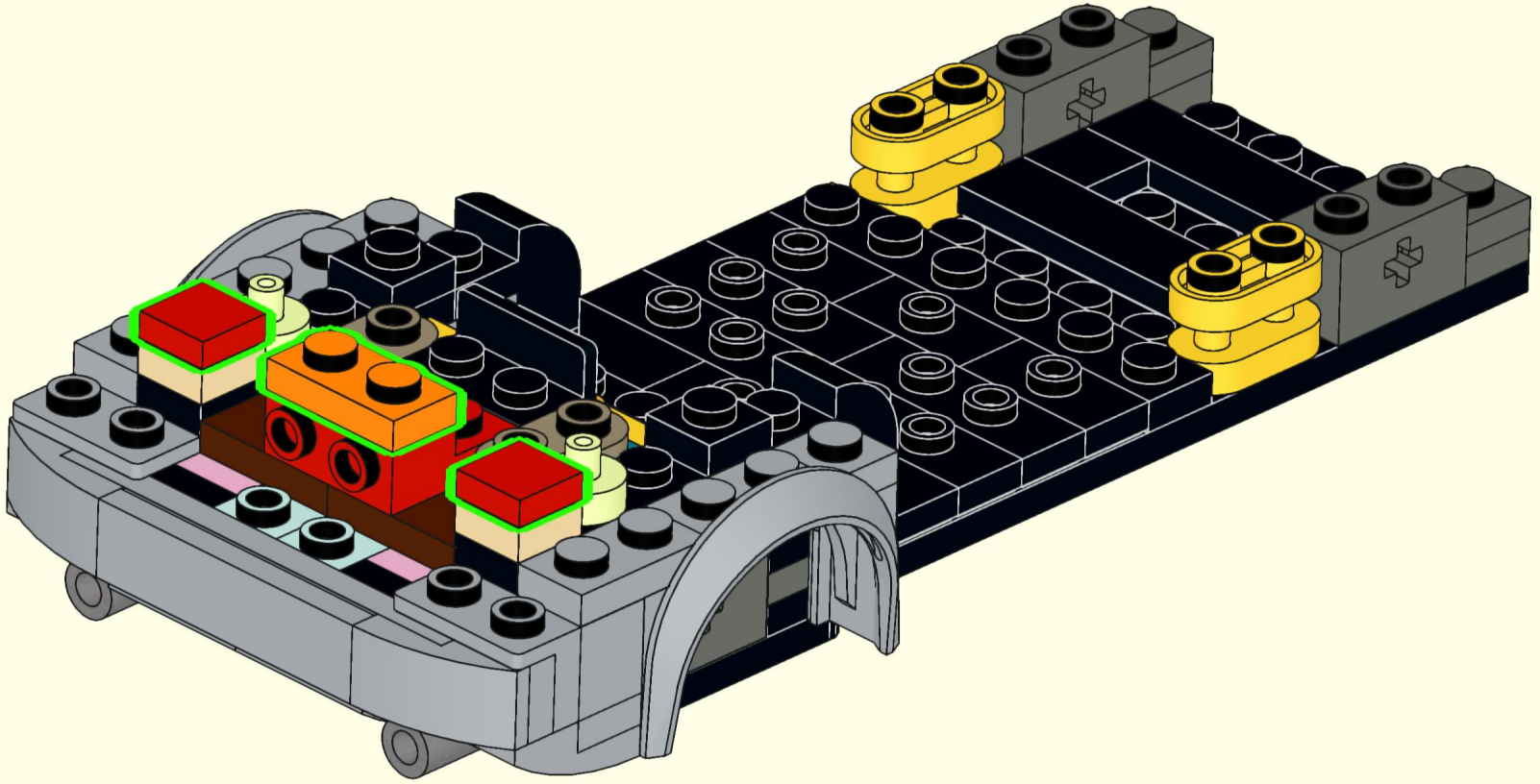

35

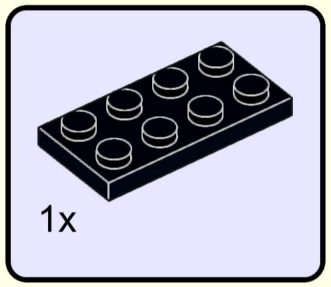

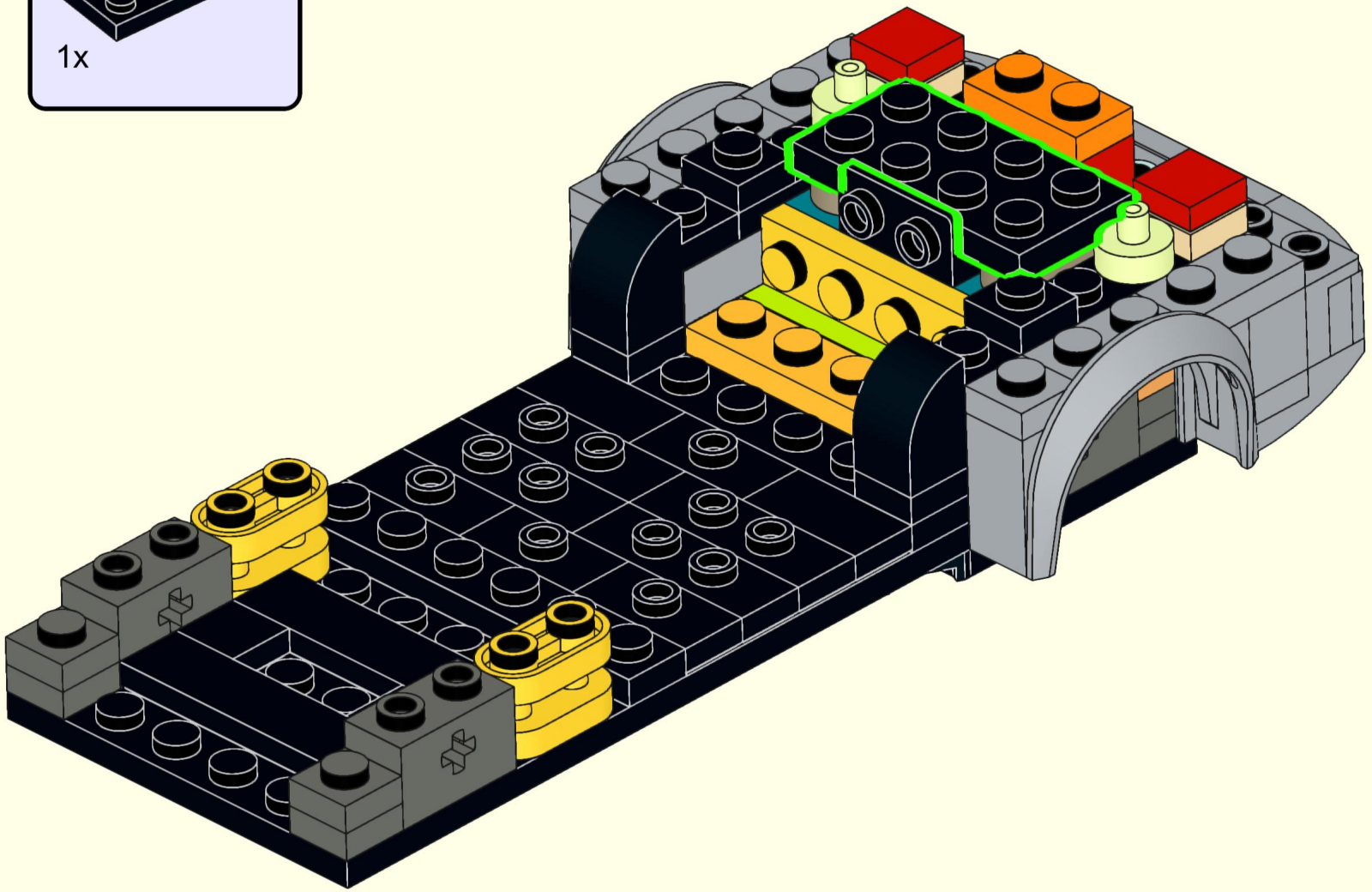

36

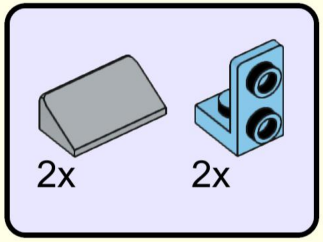

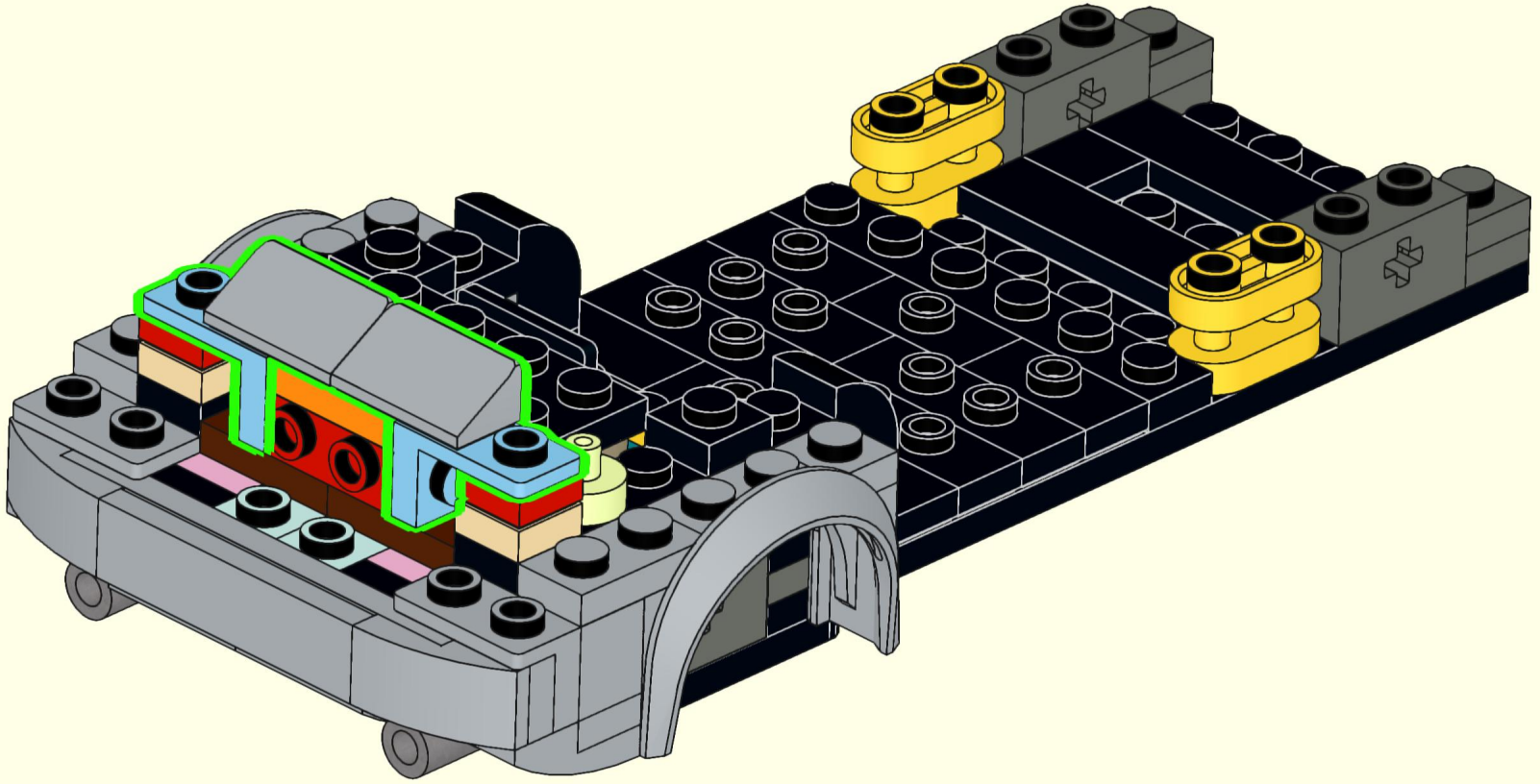

37

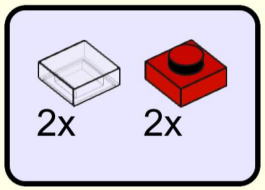

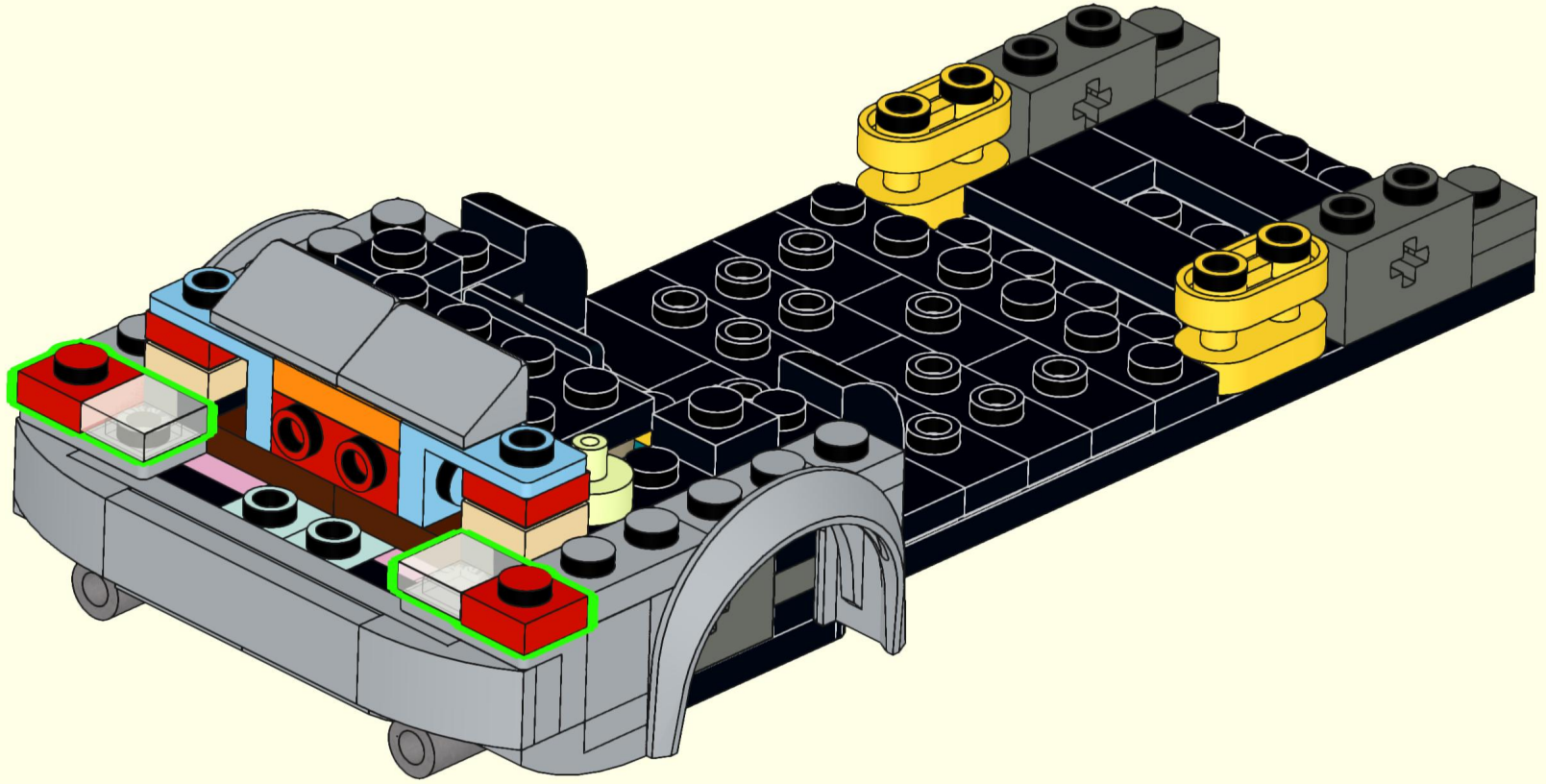

38

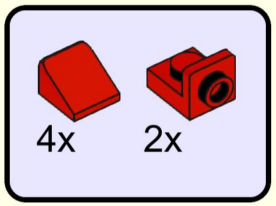

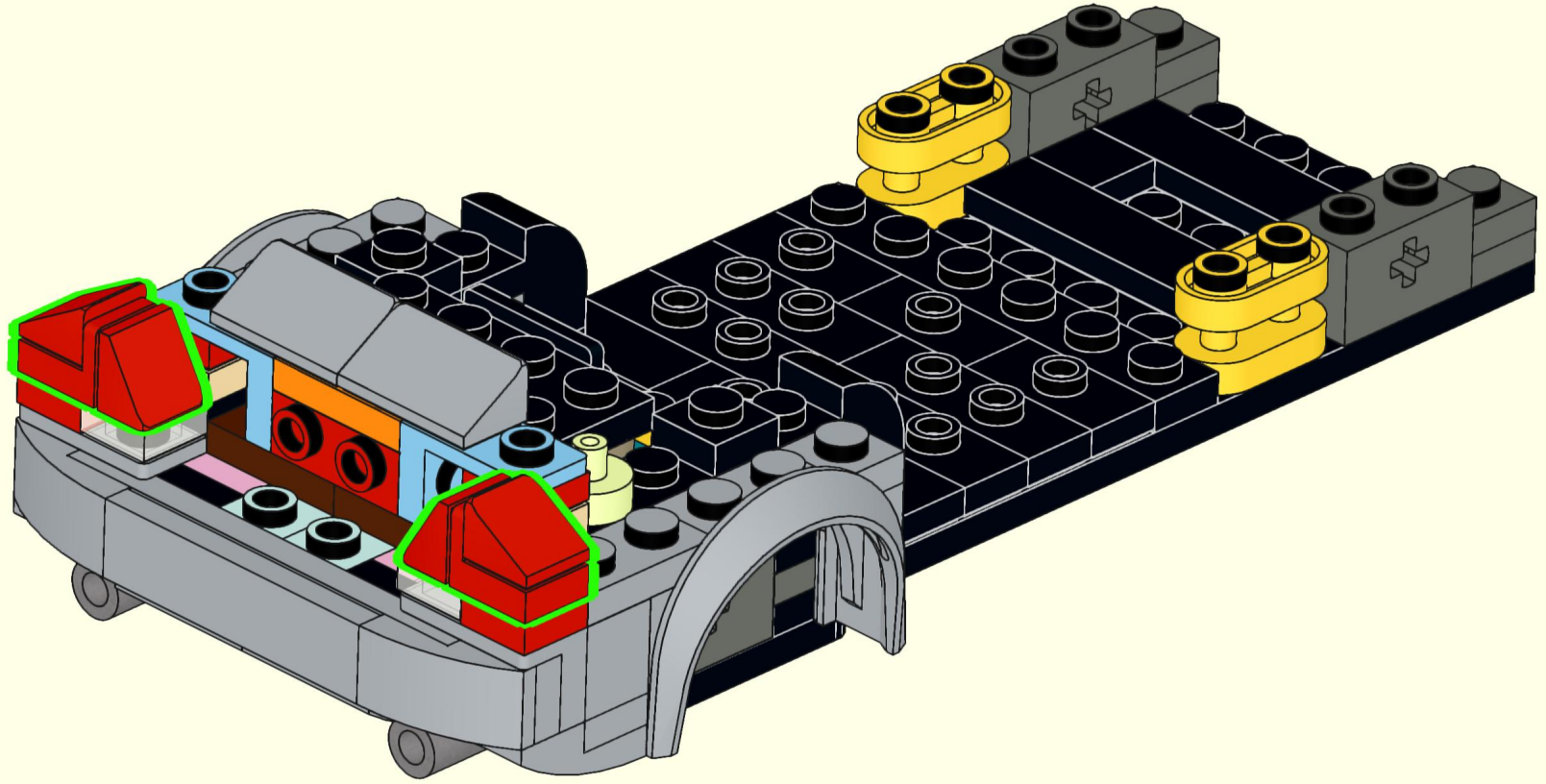

39

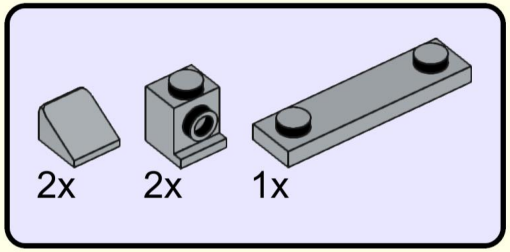

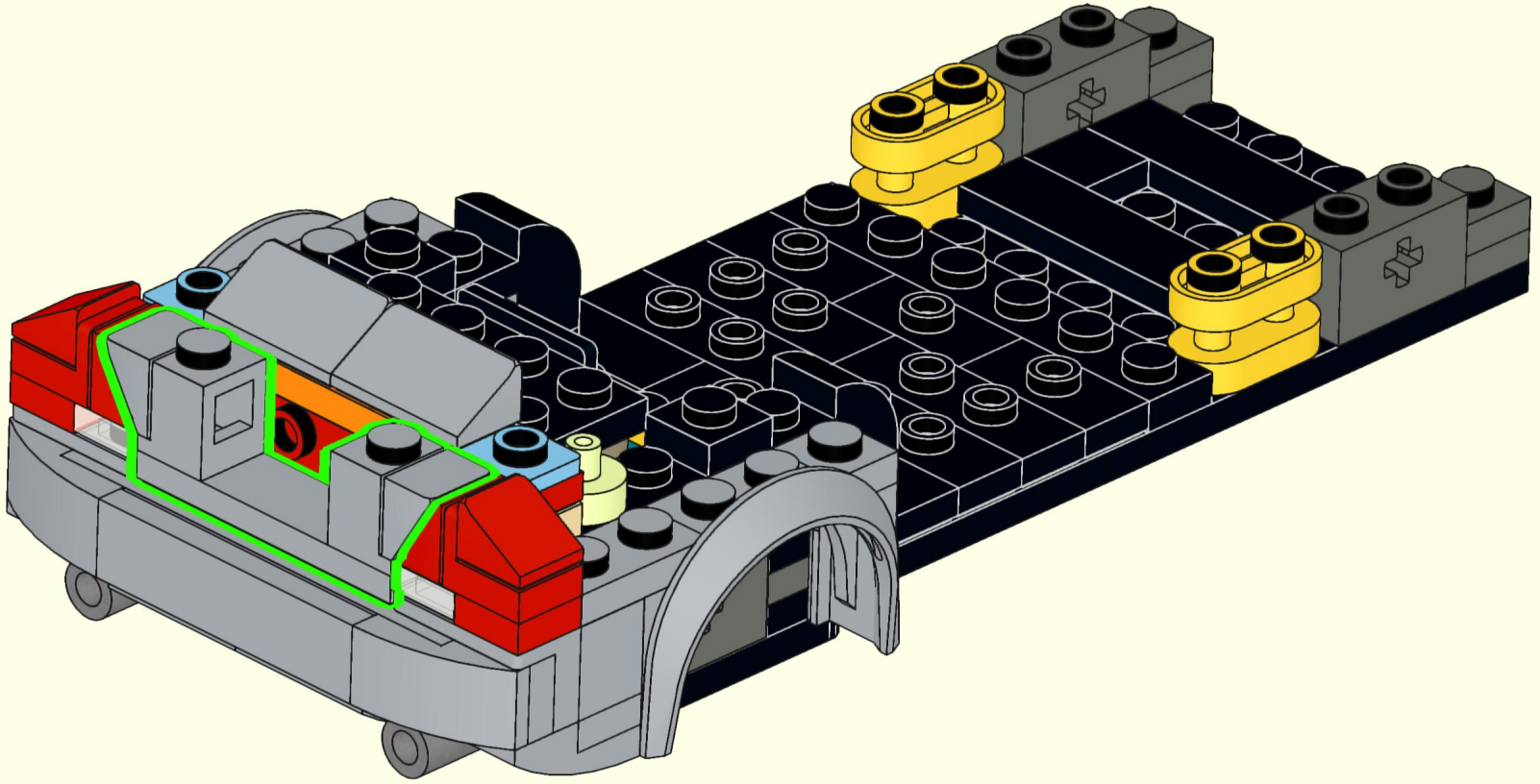

40

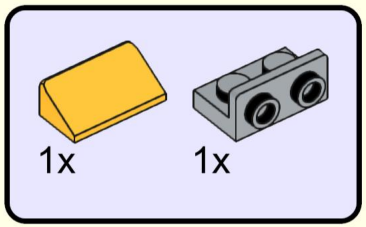

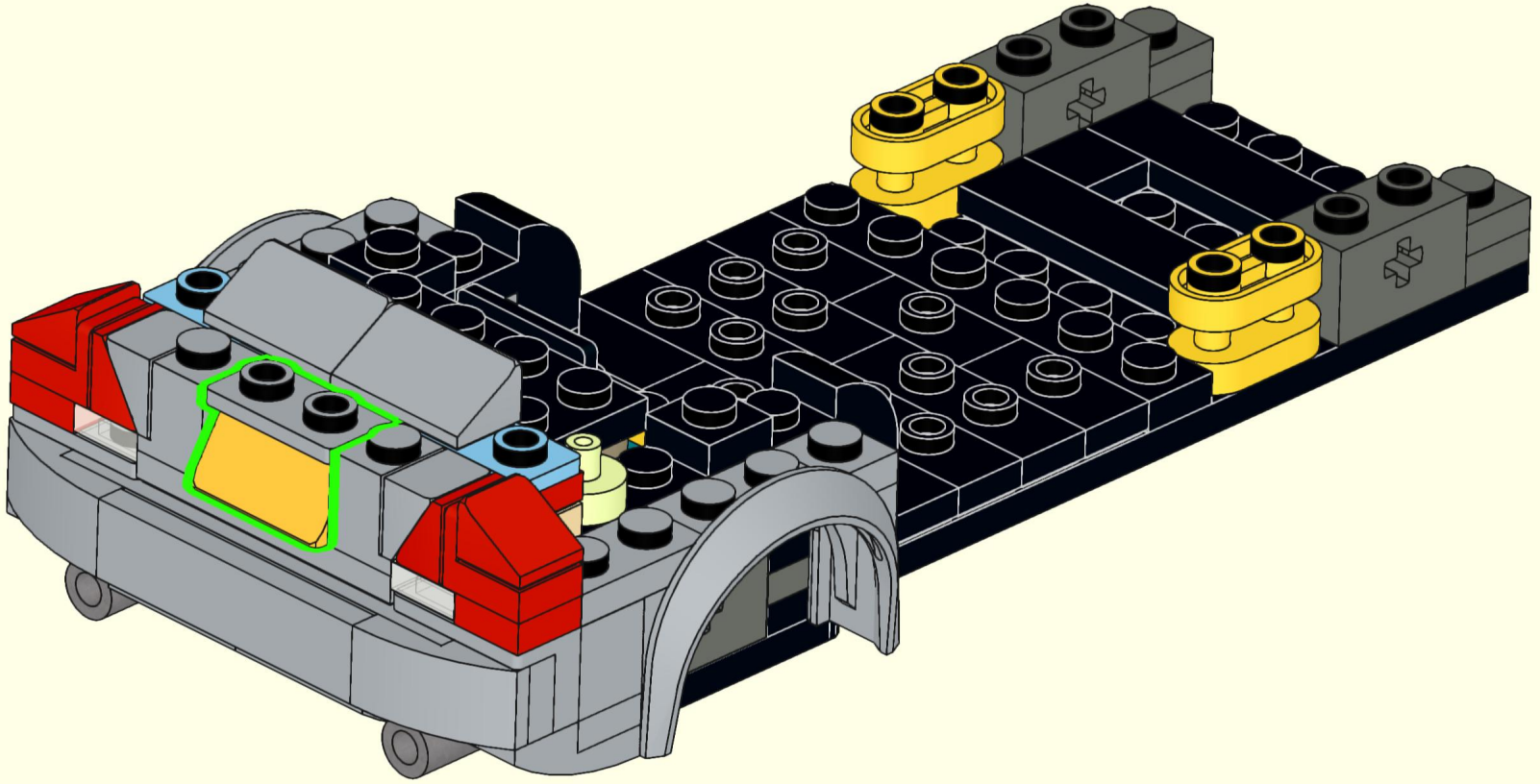

41

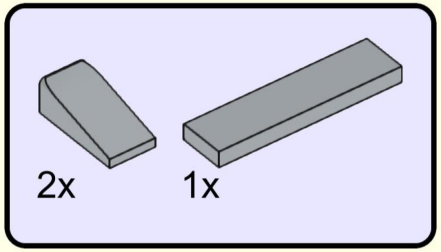

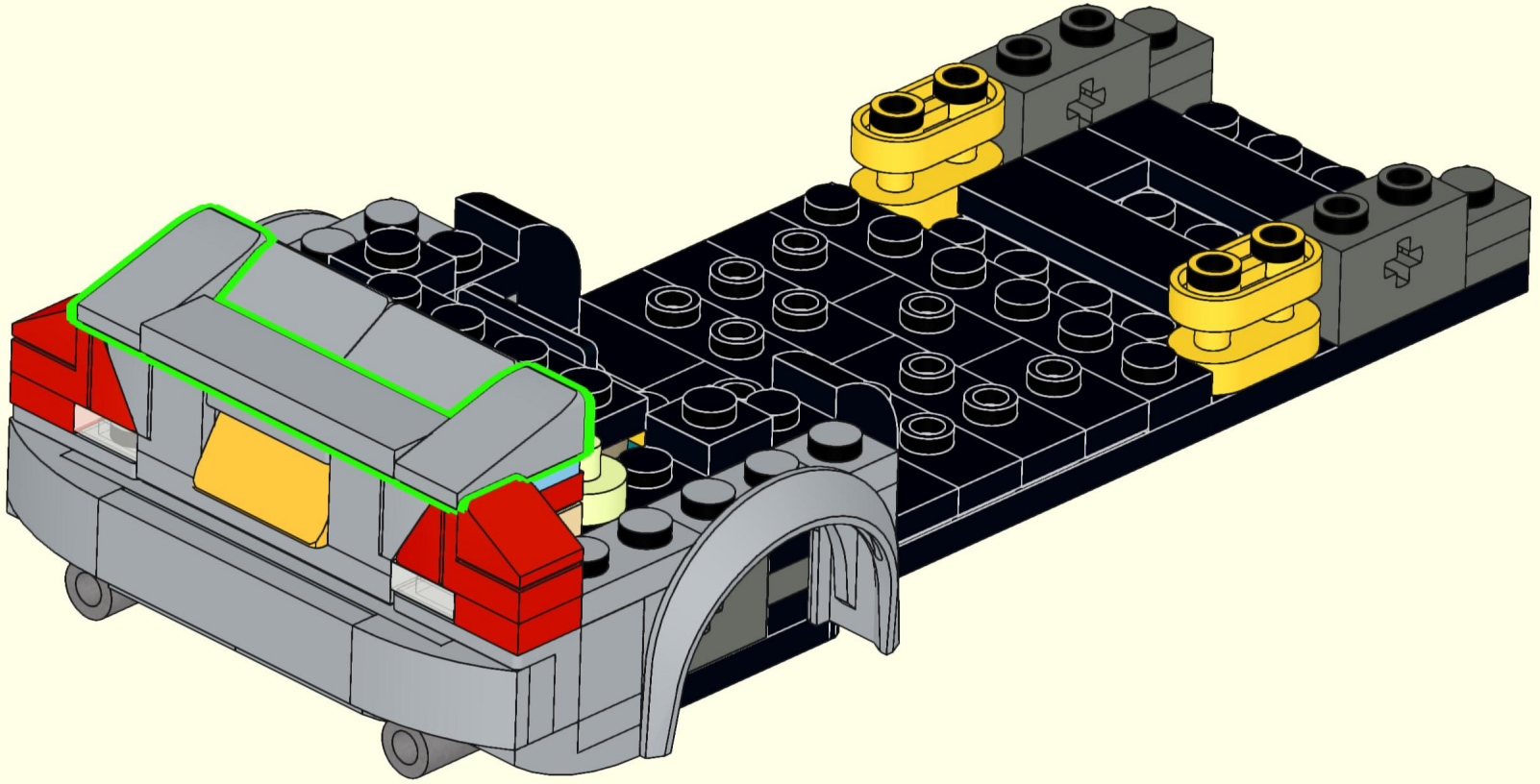

42

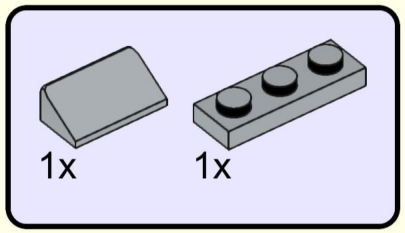

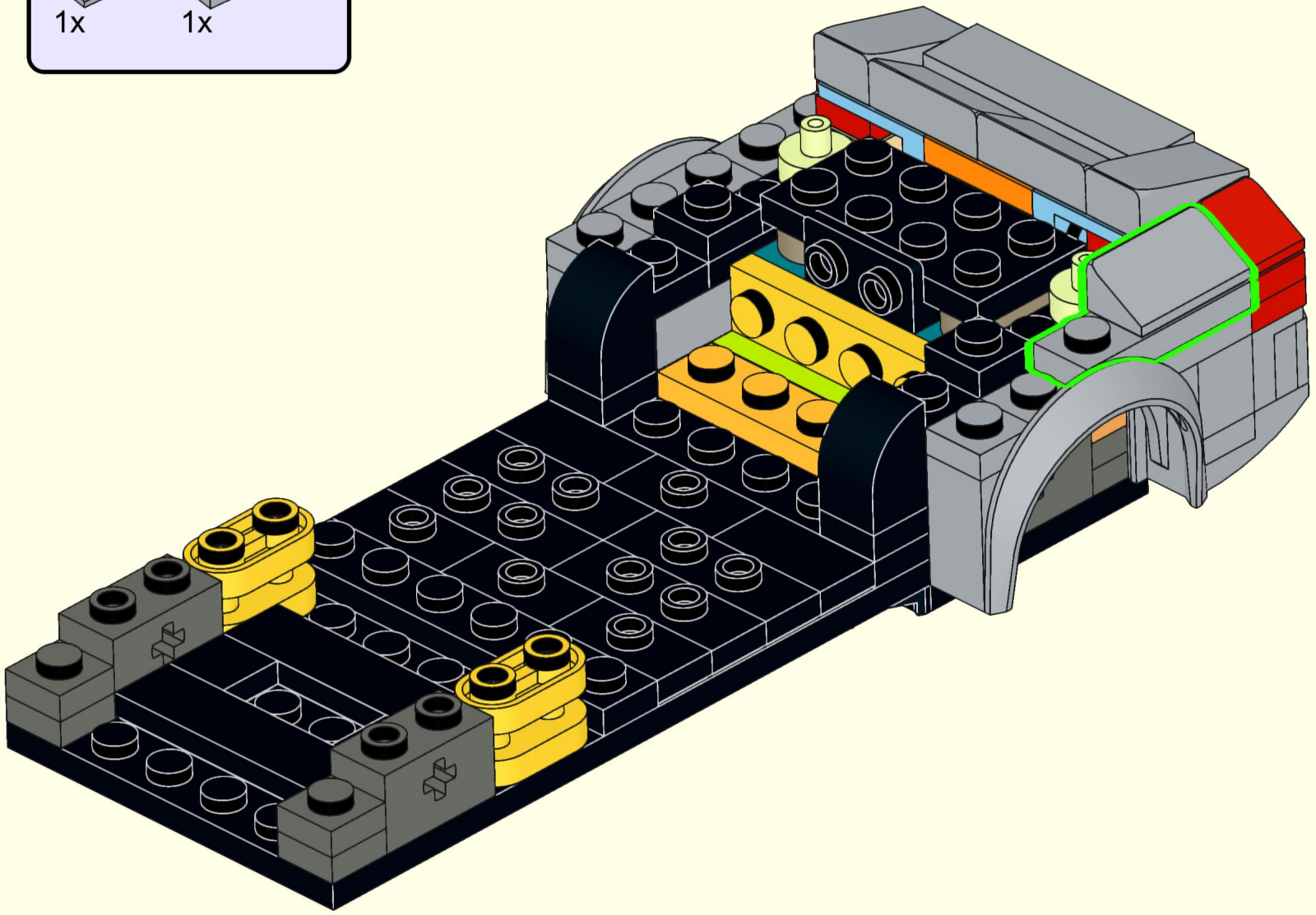

43

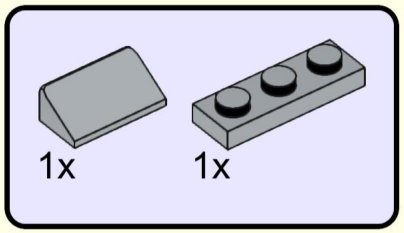

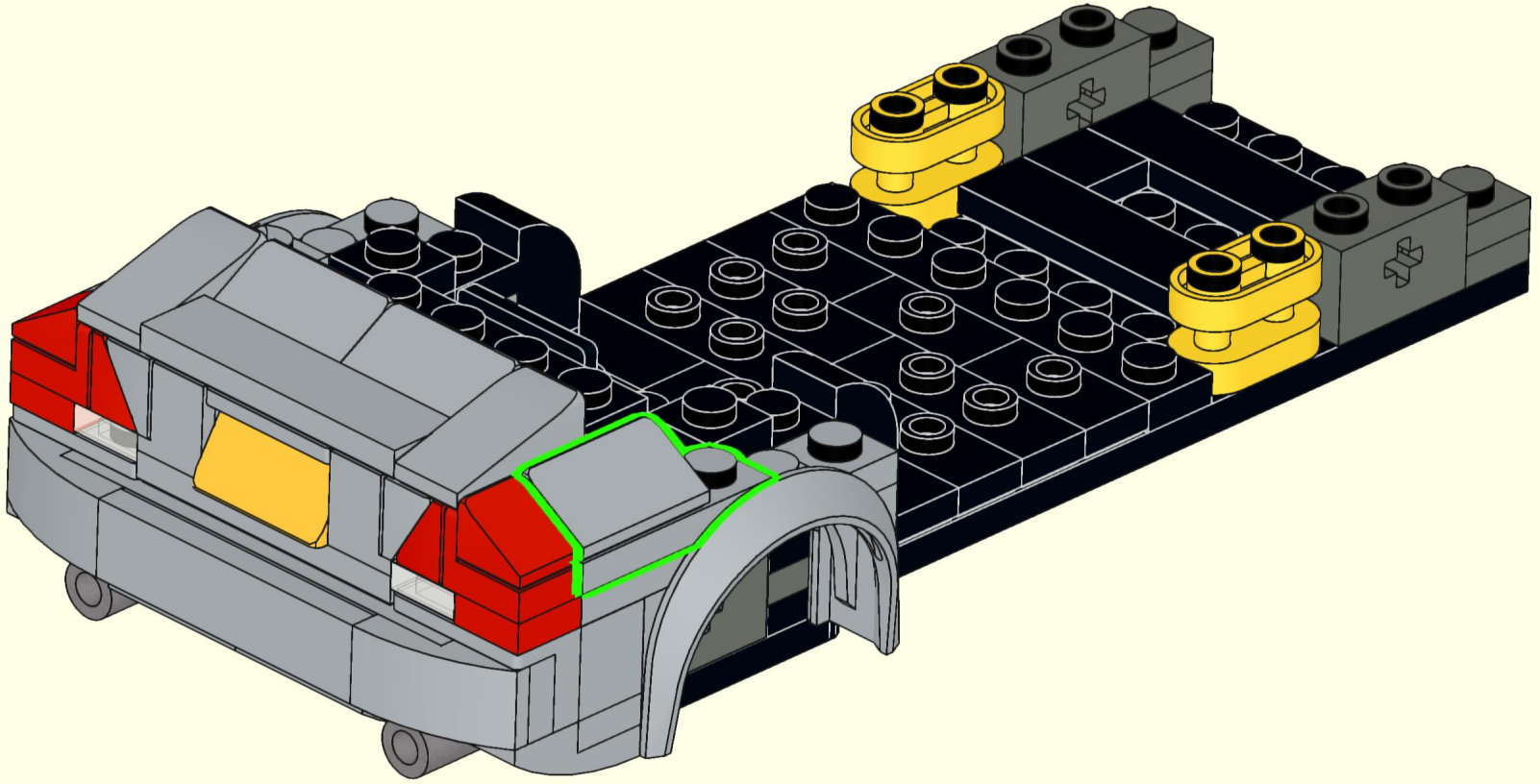

44

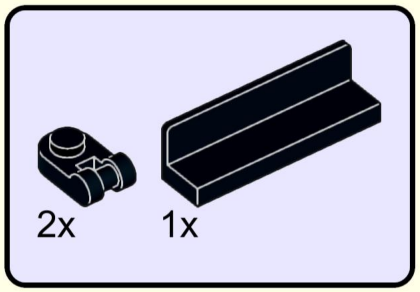

45

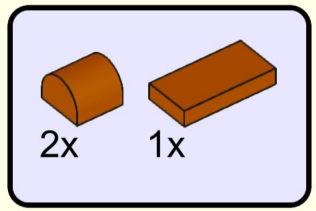

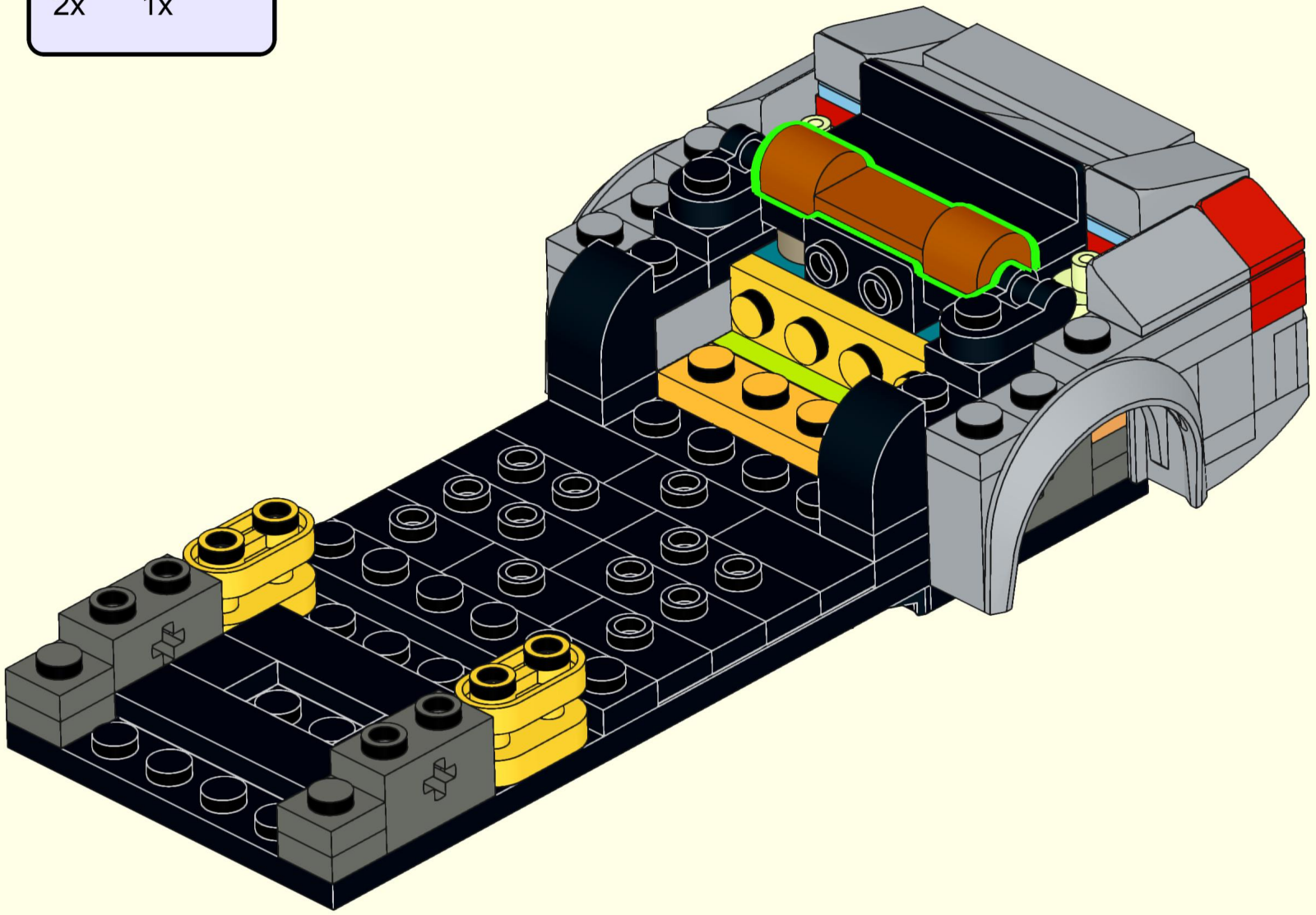

46

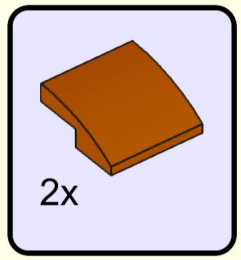

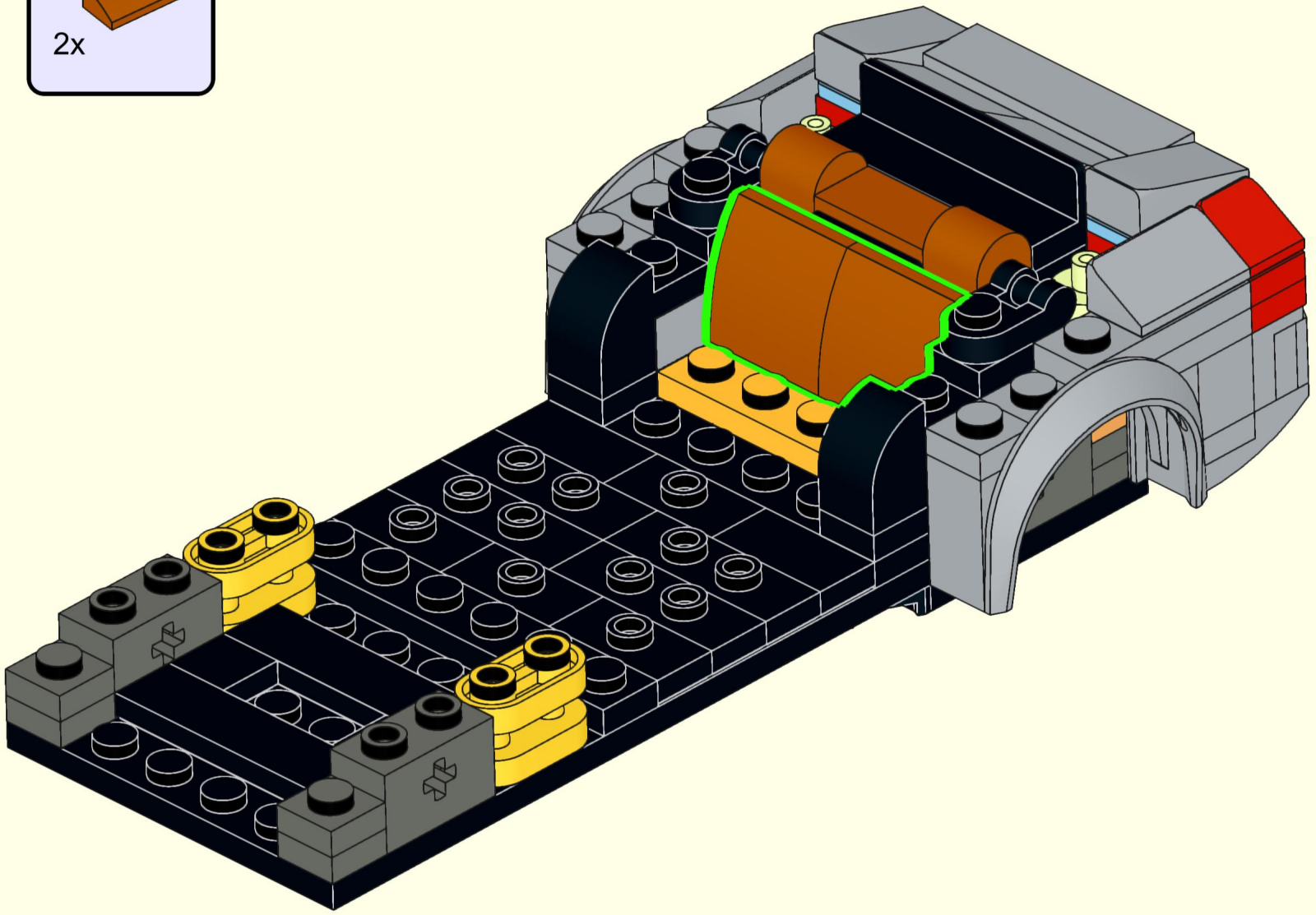

47

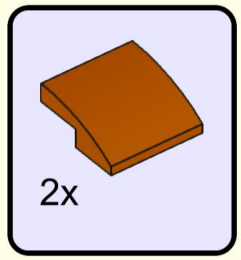

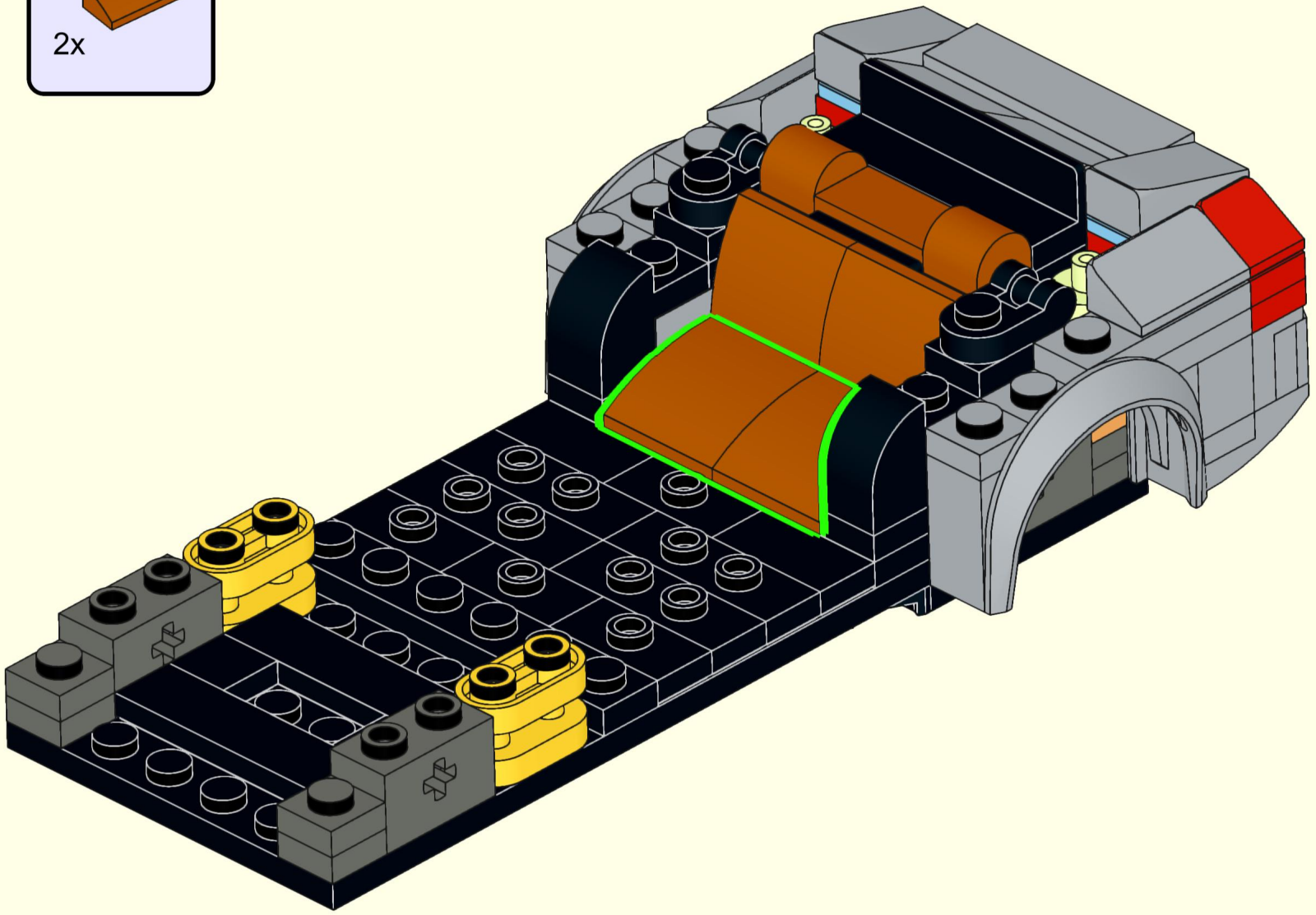

48

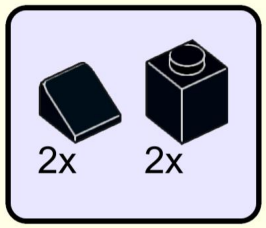

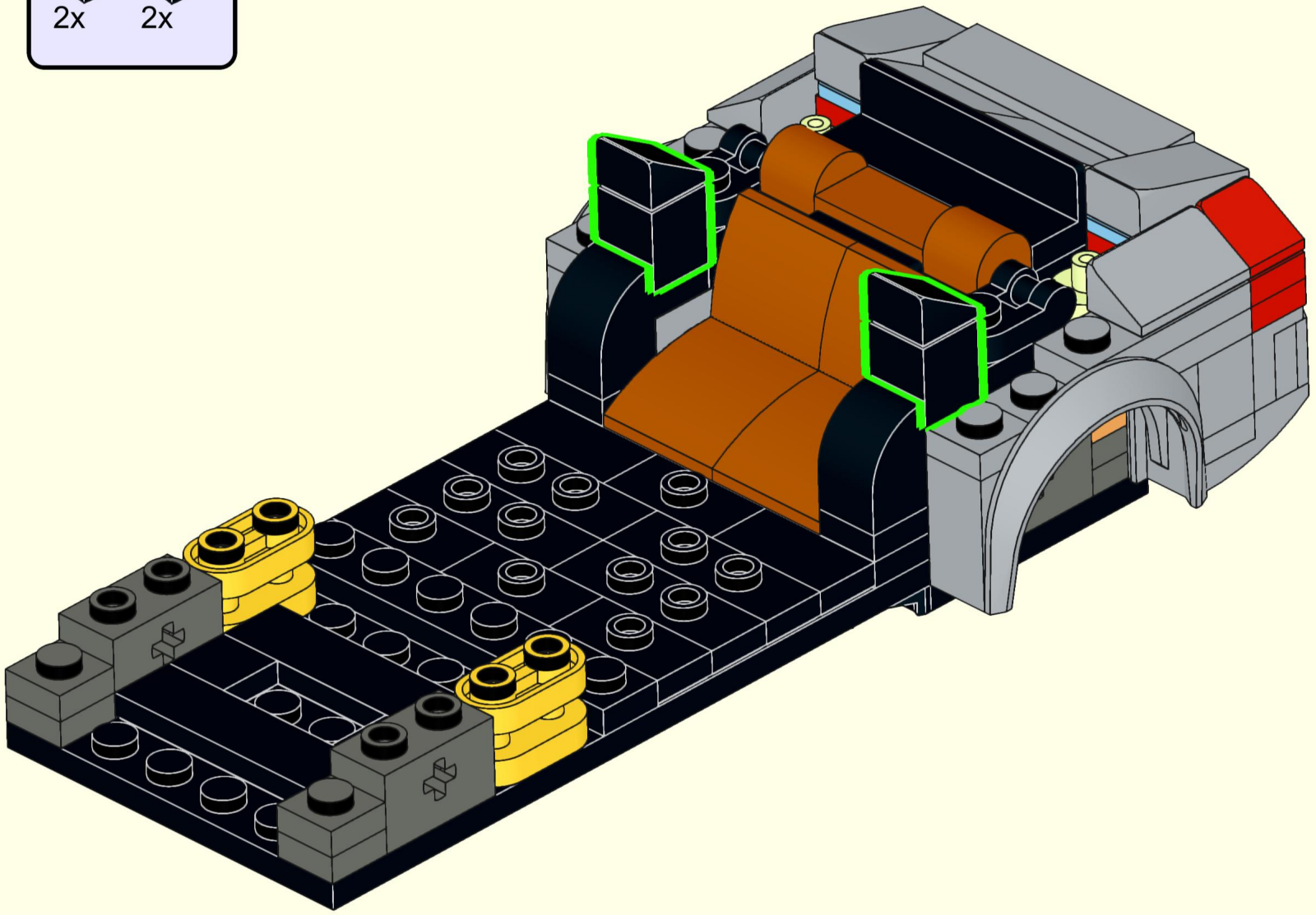

49

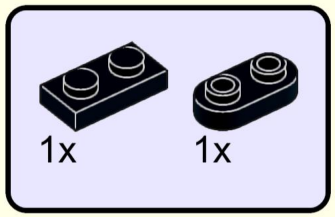

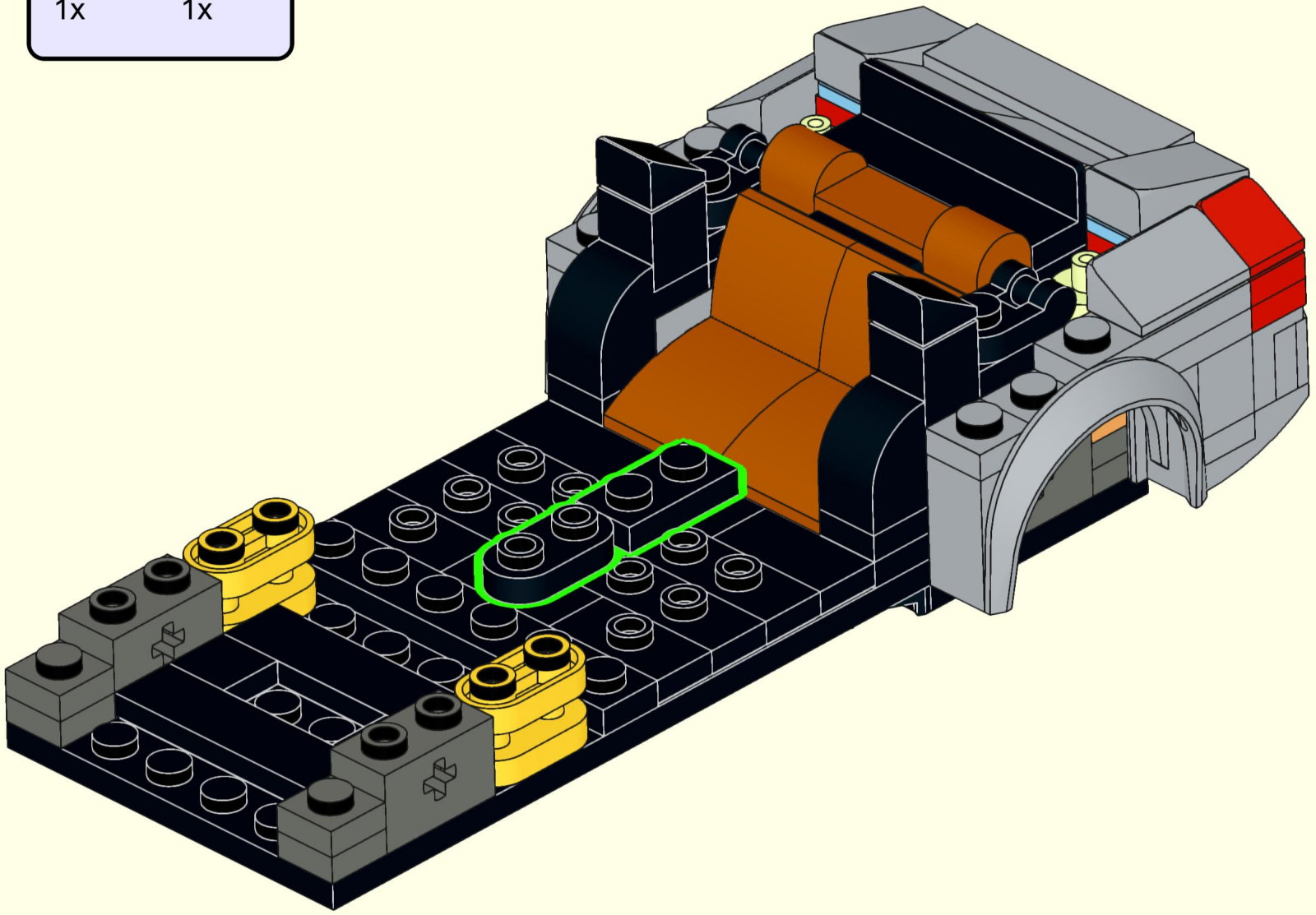

50

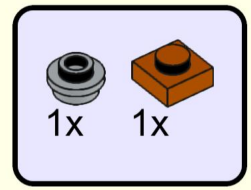

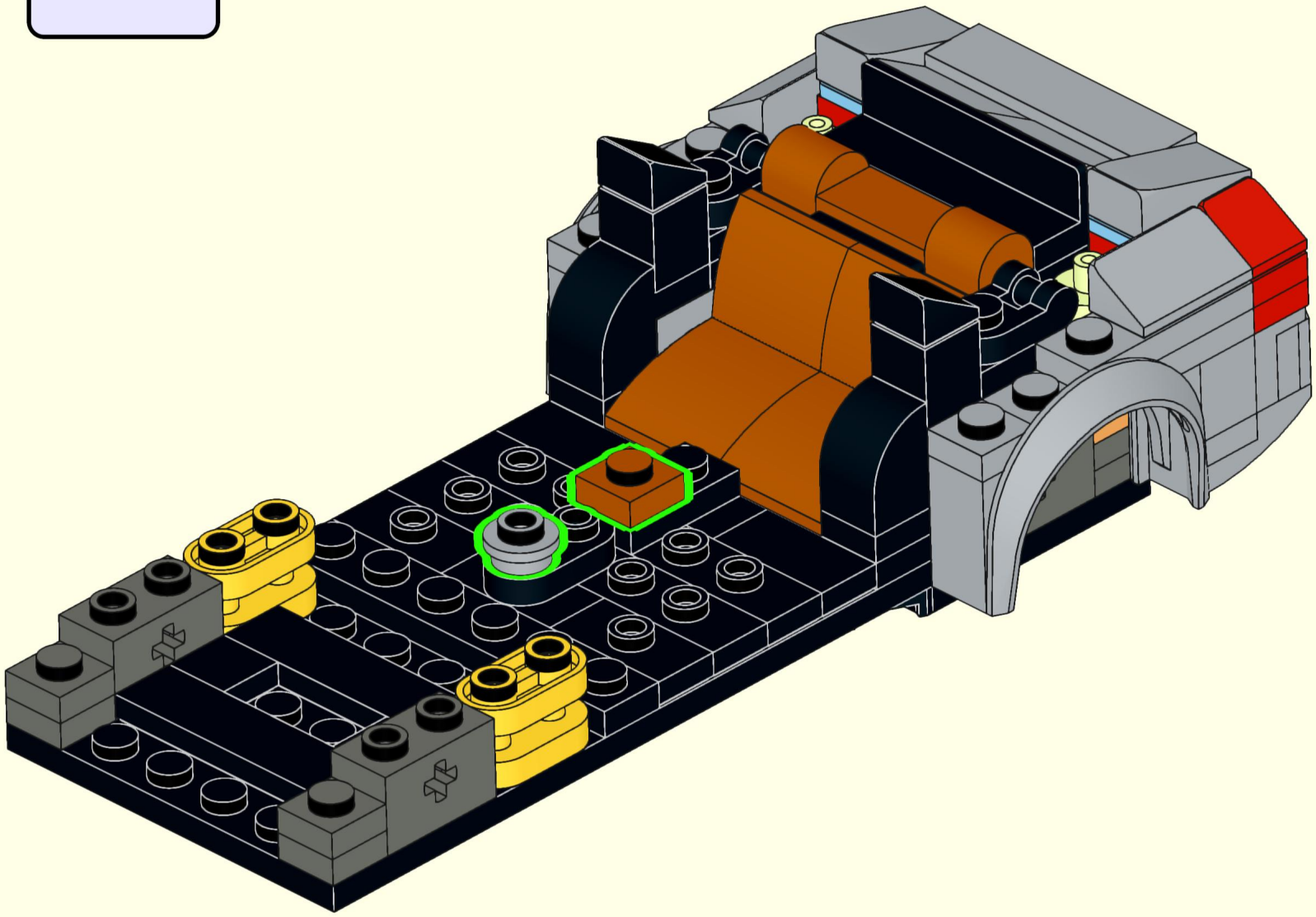

51

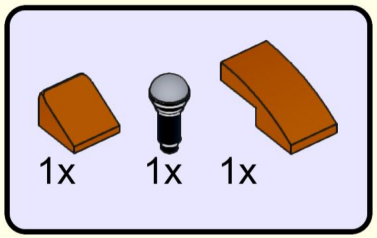

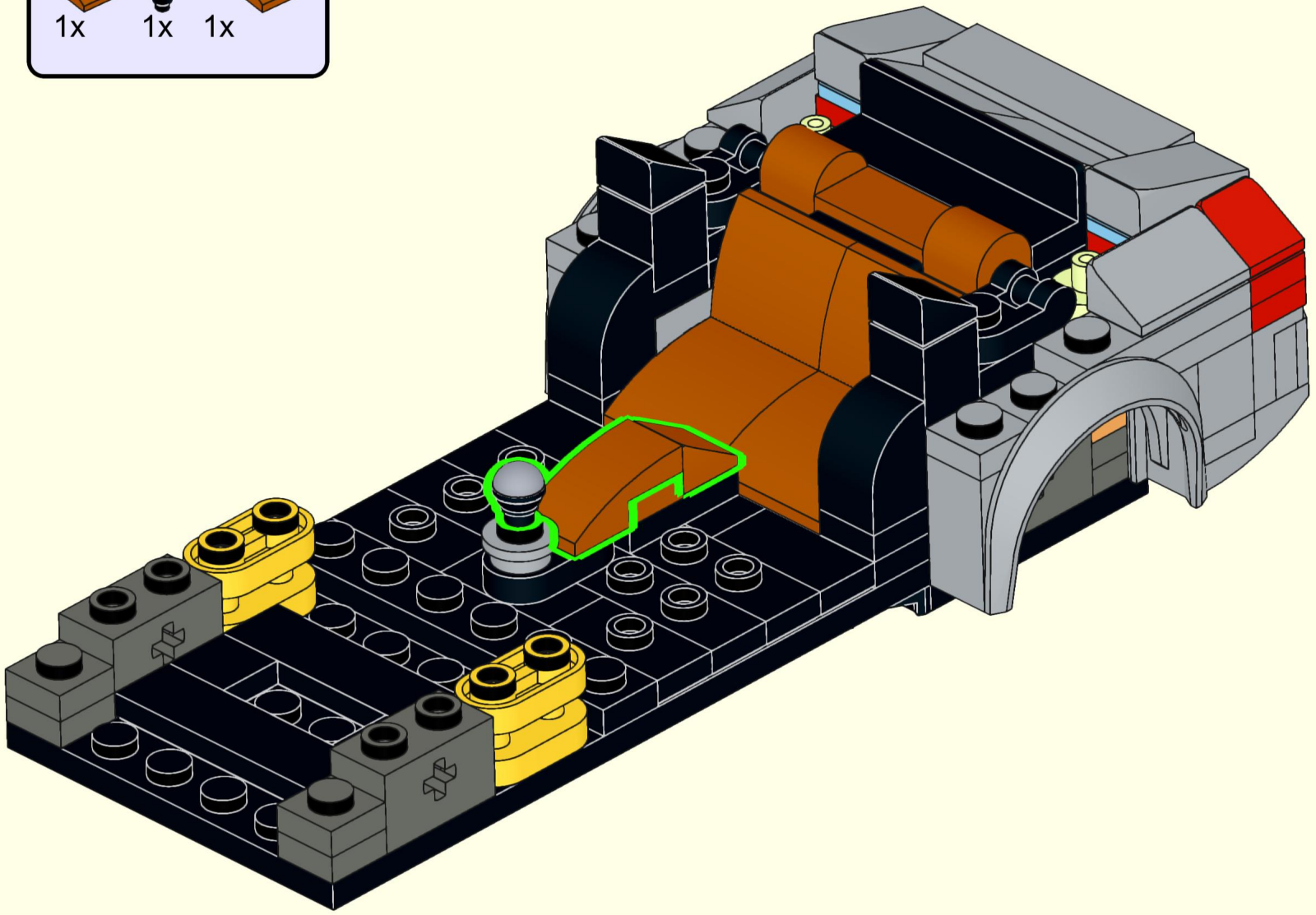

52

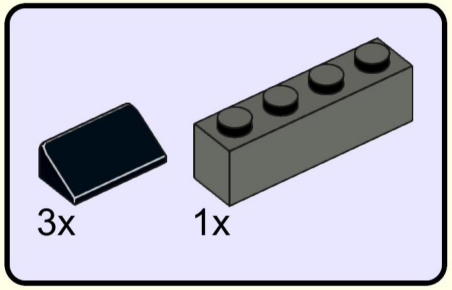

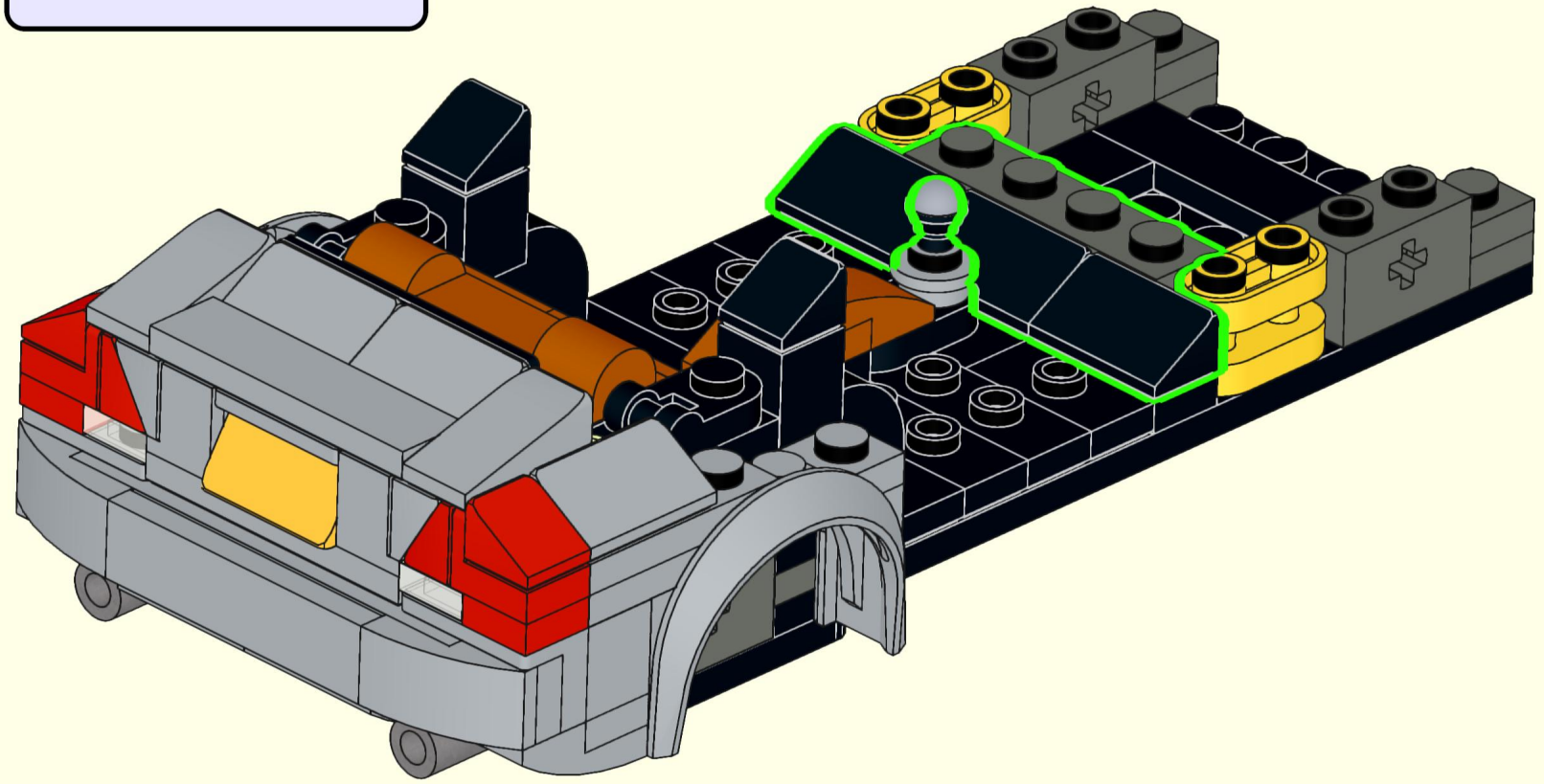

53

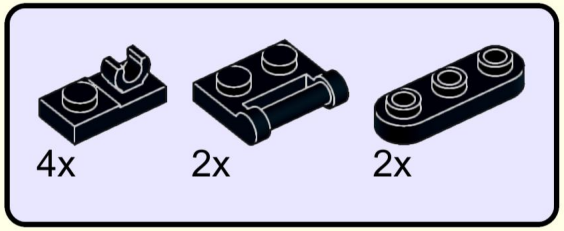

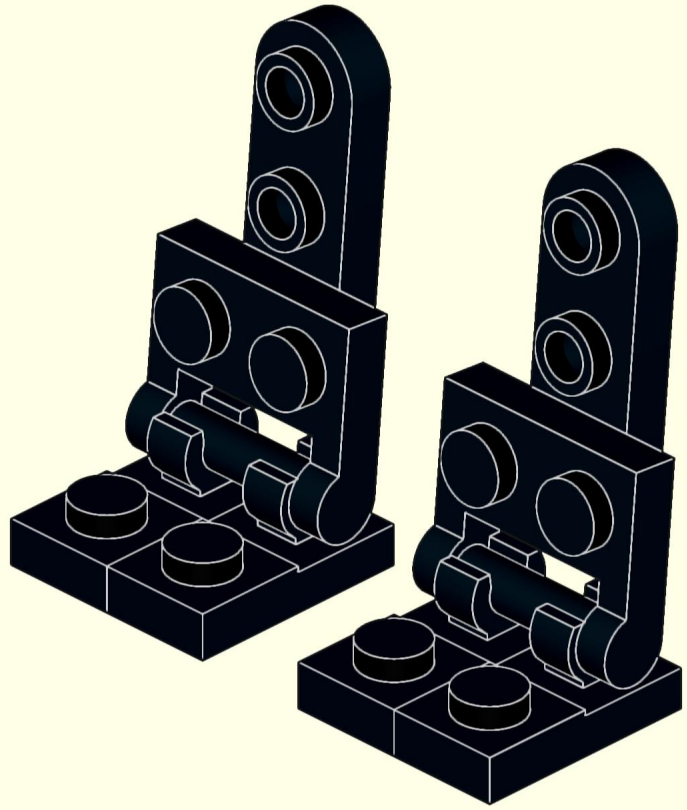



54

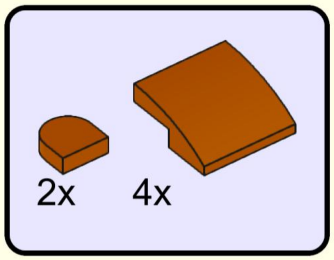



55

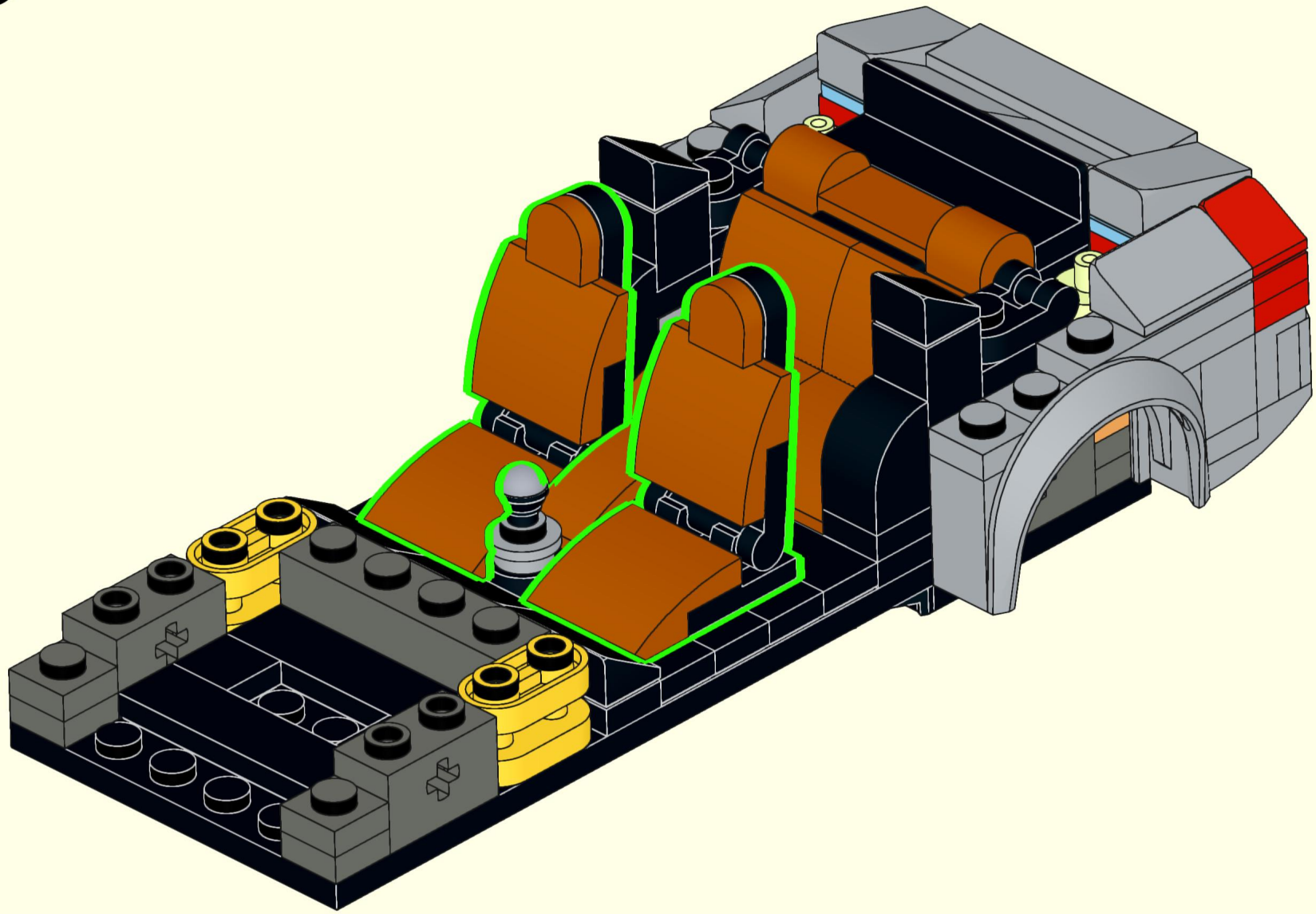

56

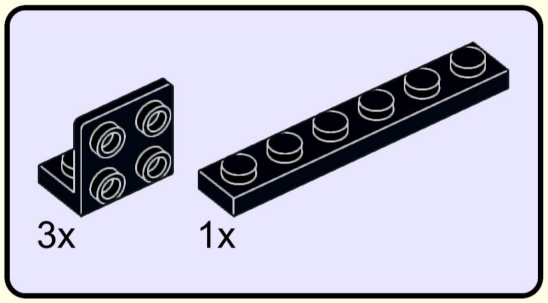

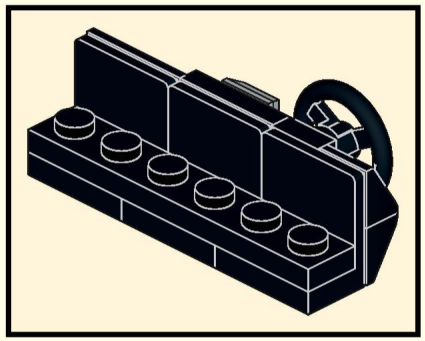

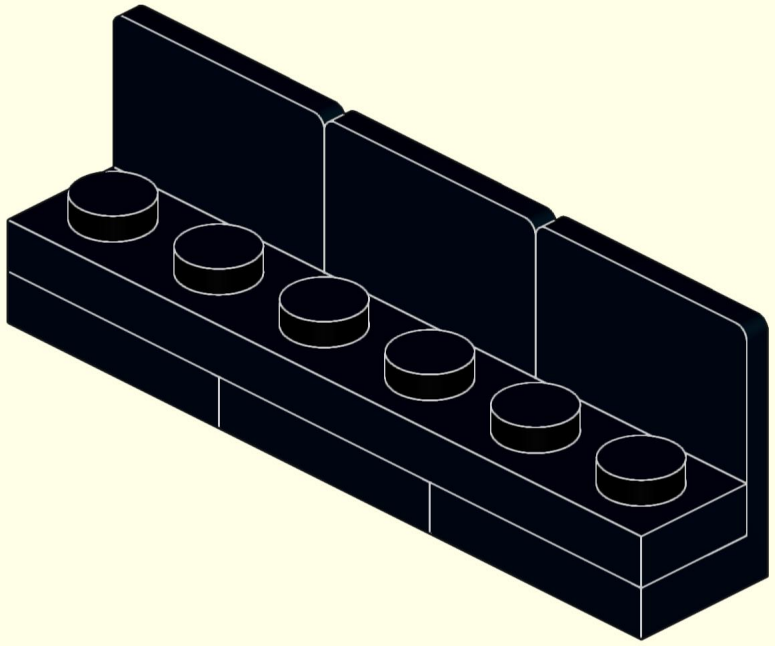

57

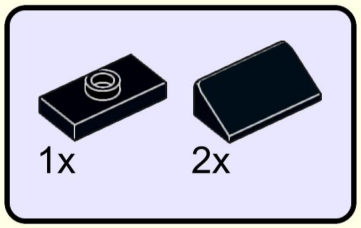

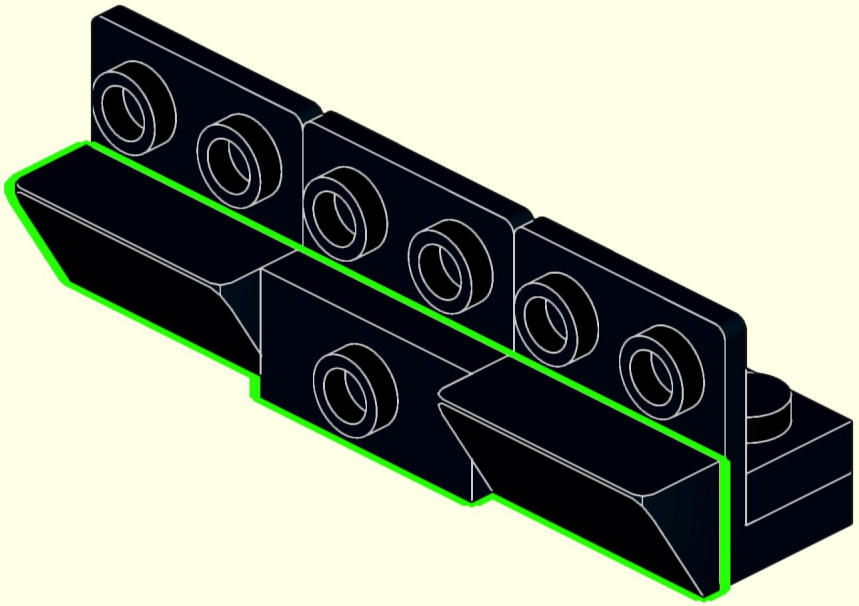

58

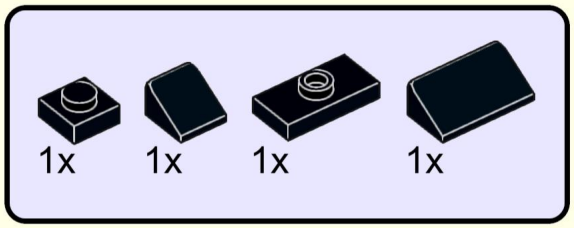

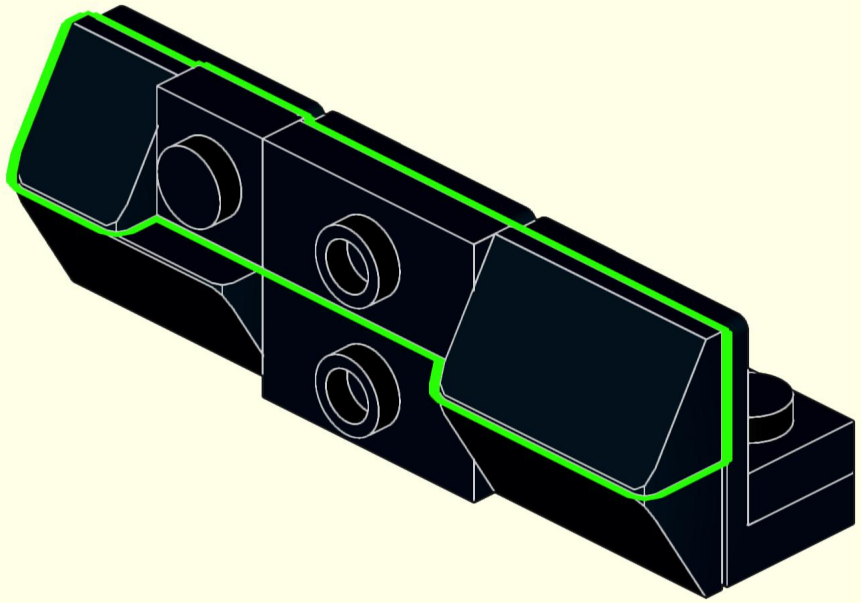

59

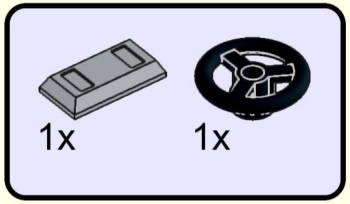

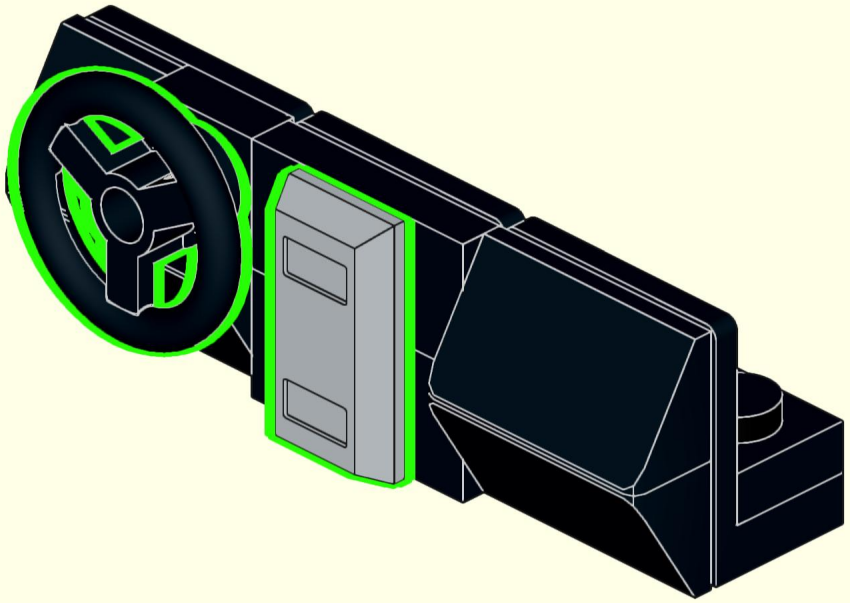

60

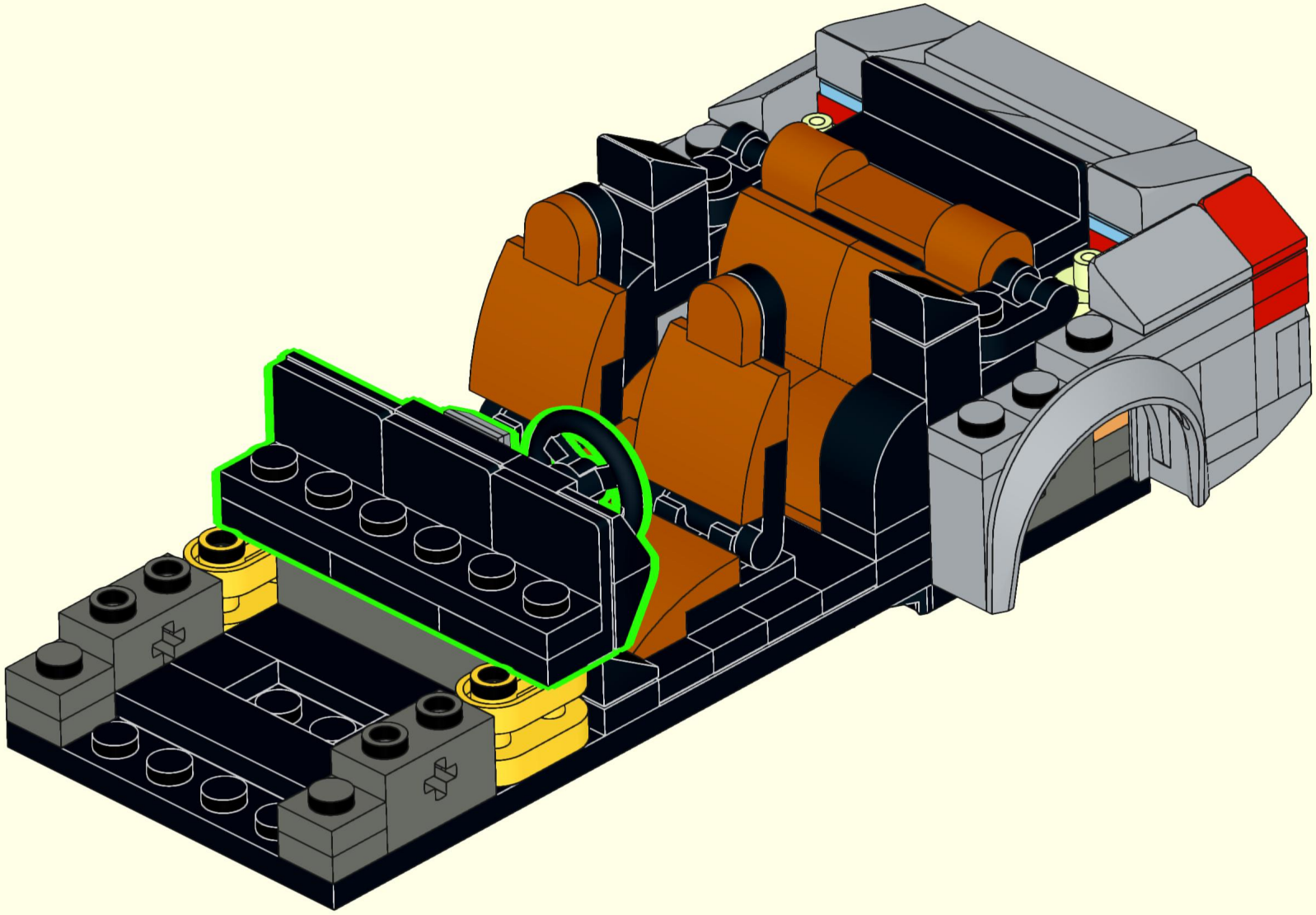

61

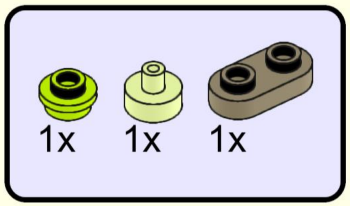

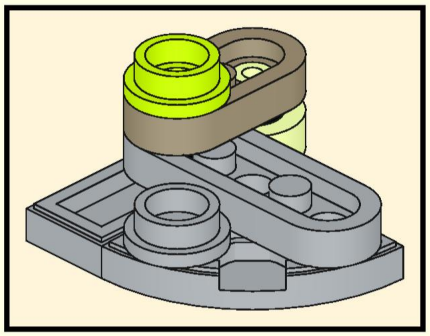

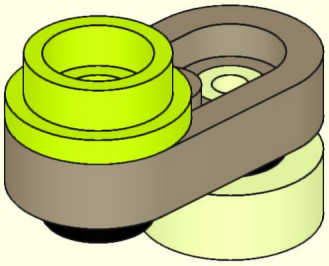

62

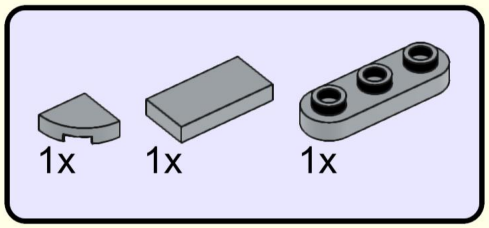

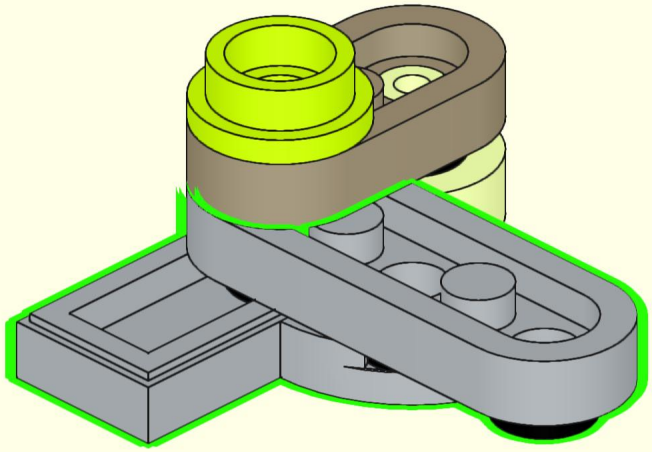

63

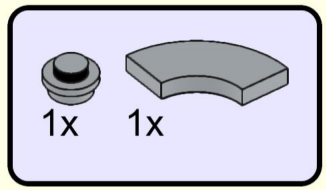

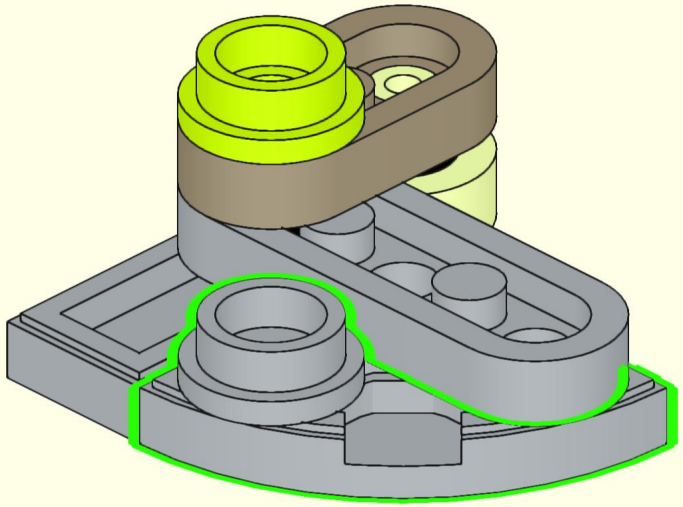

64

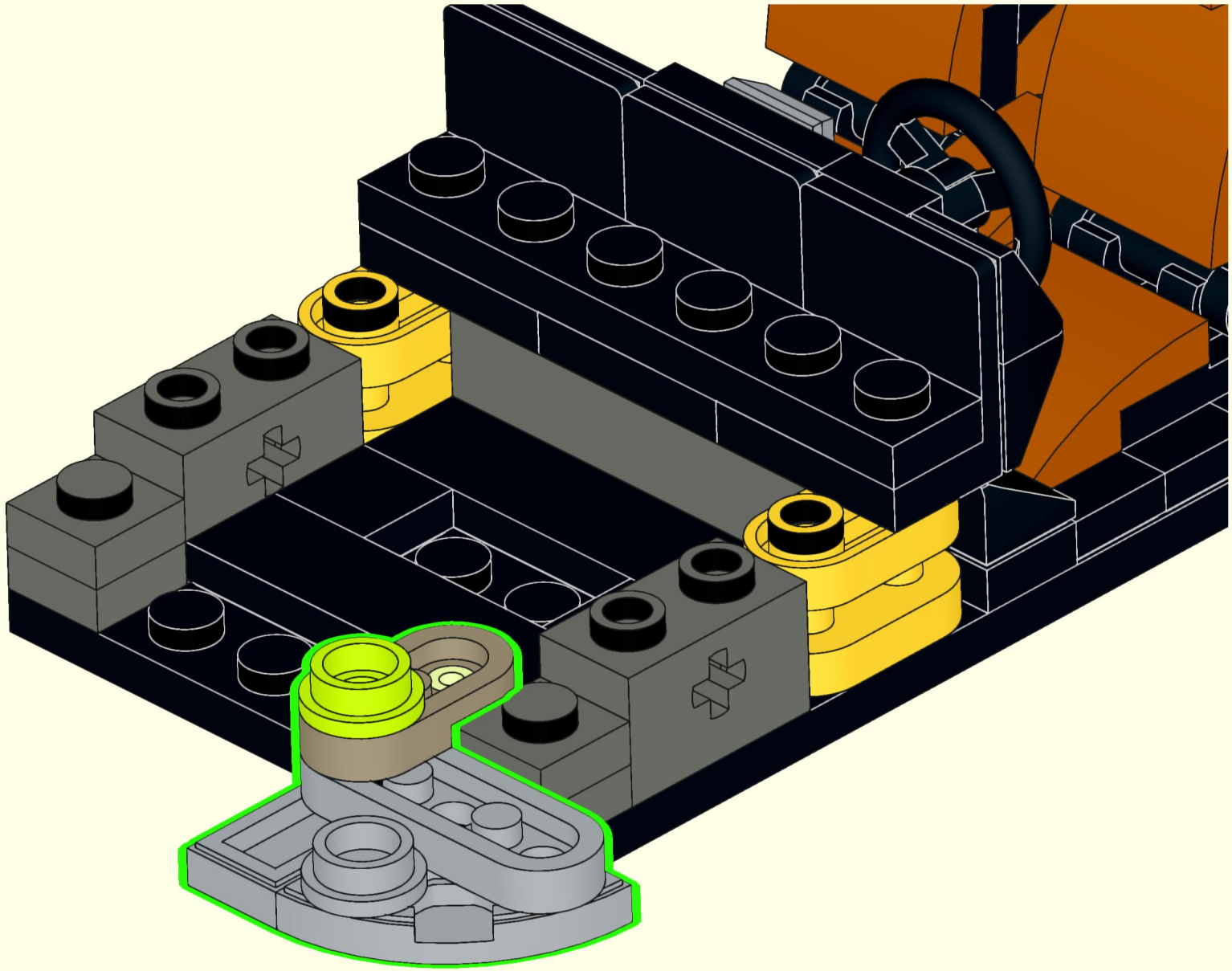

65

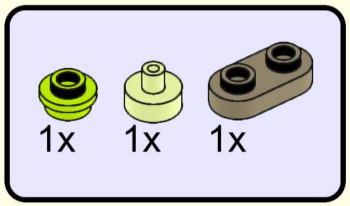

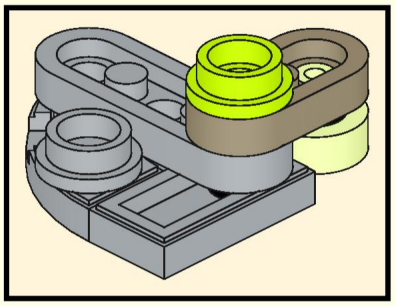

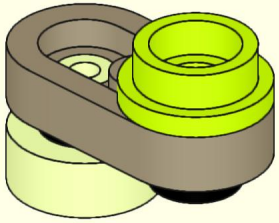

66

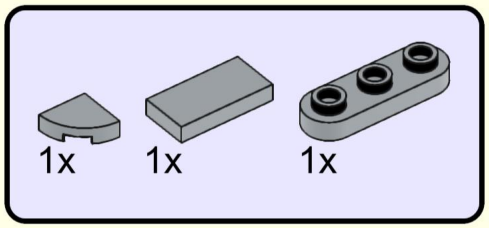

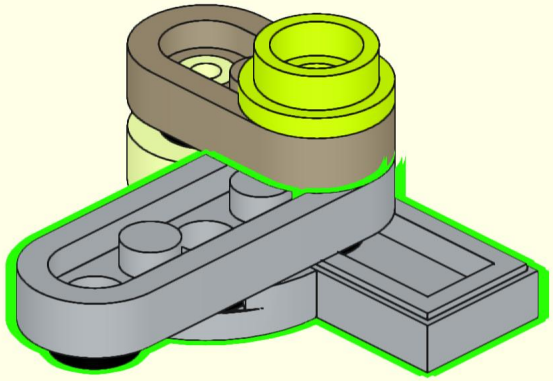

67

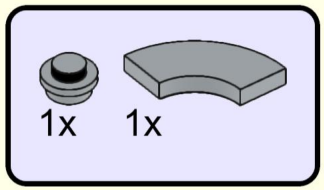

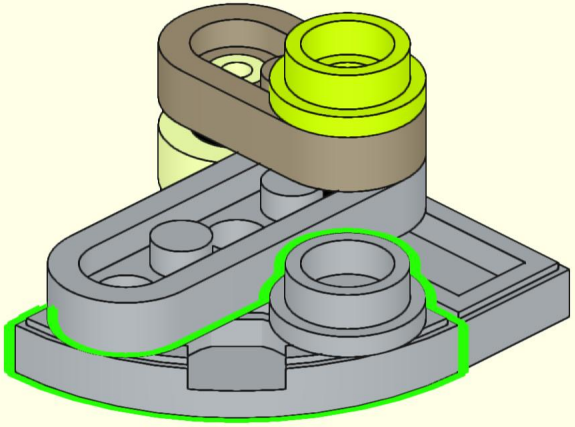

68

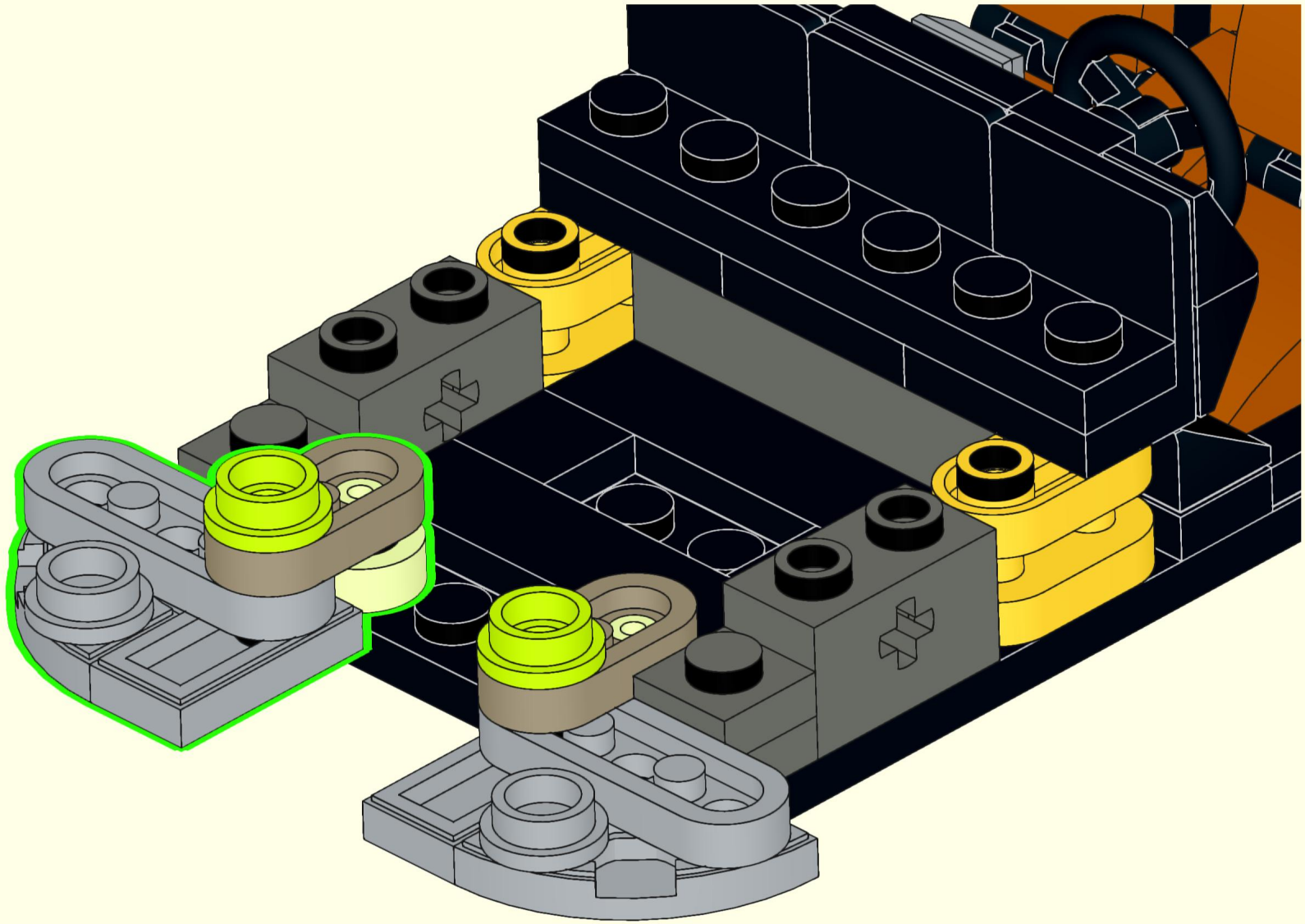

69

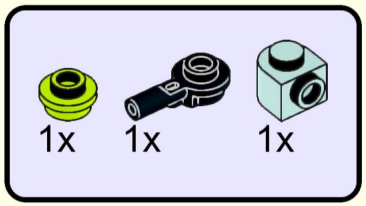

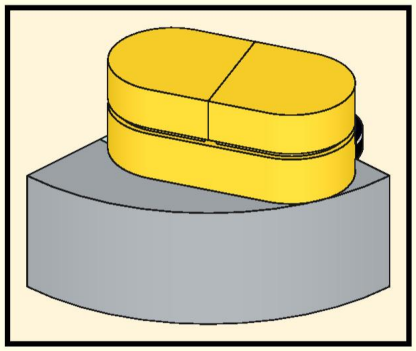

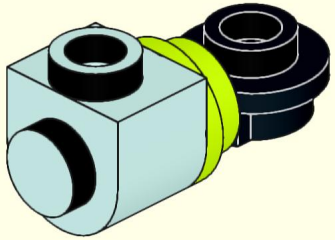

70

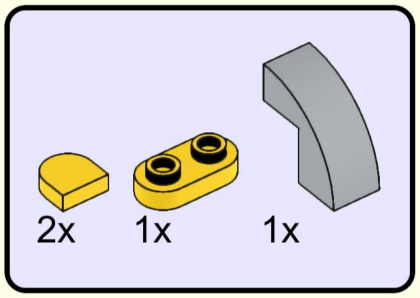

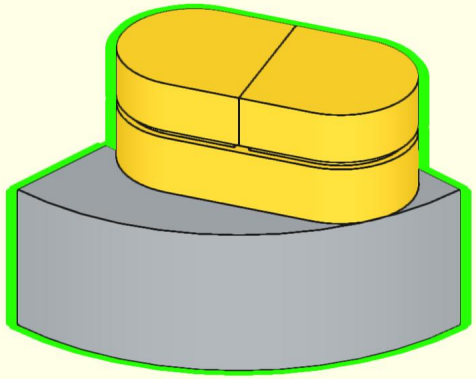

71

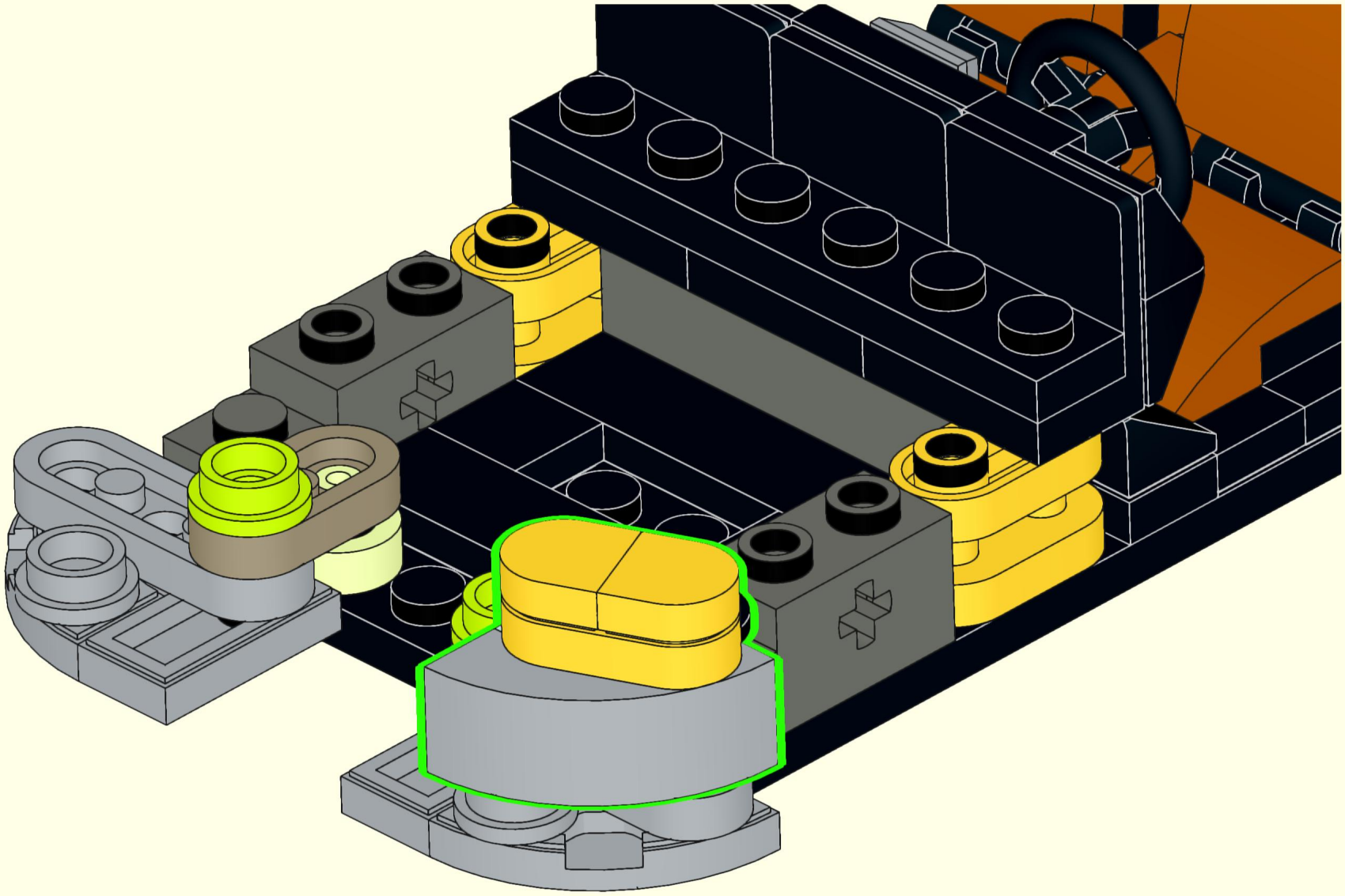

72

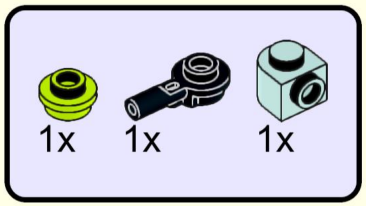

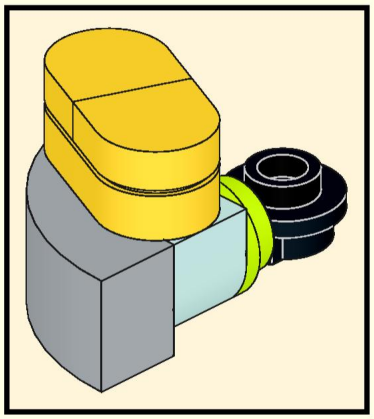

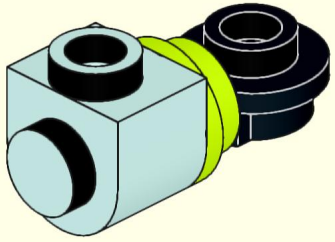

73

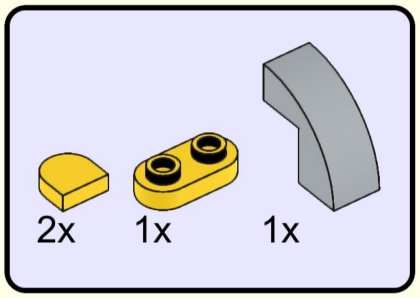

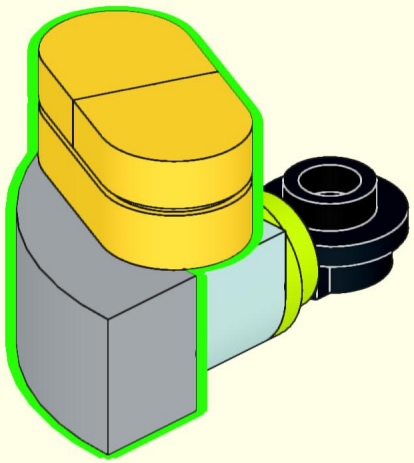

74

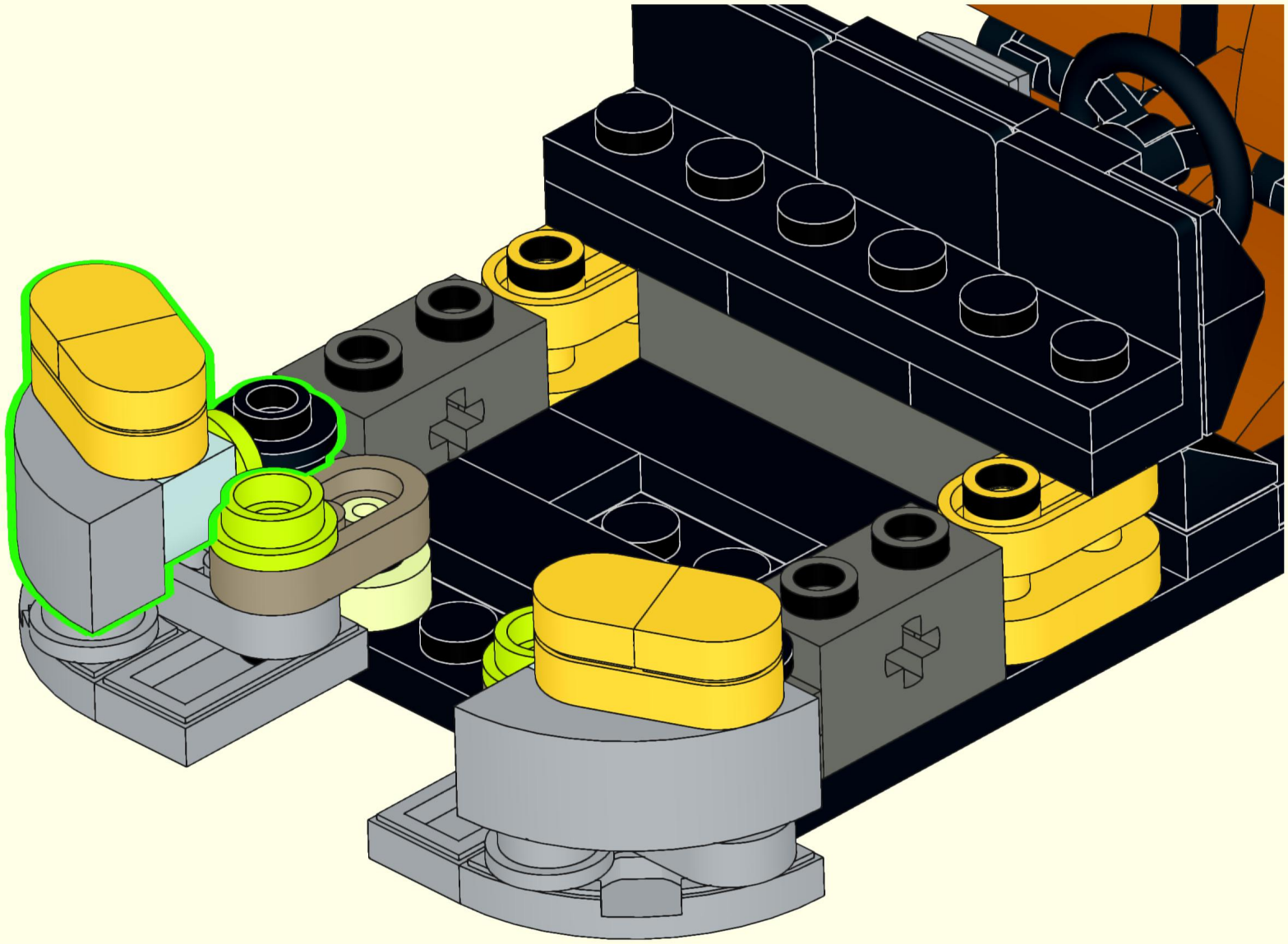

75

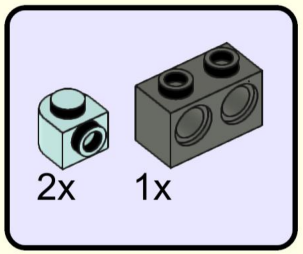

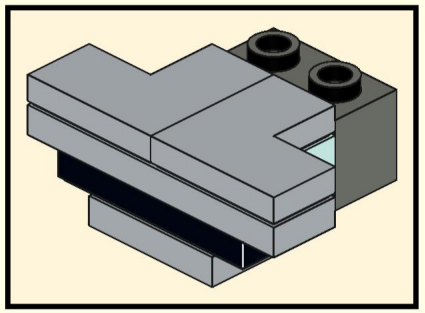

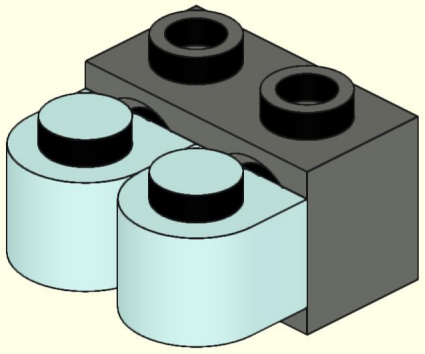

76

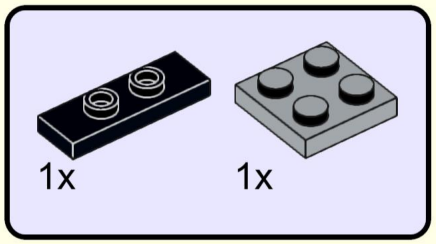

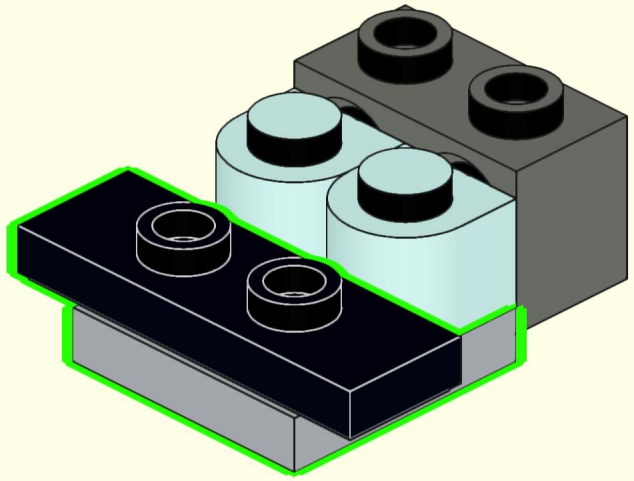

77

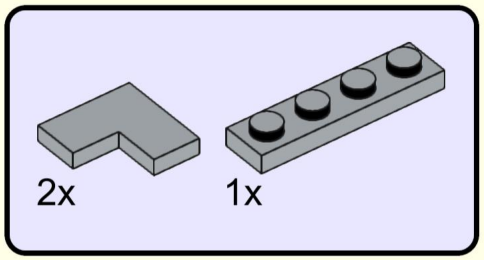

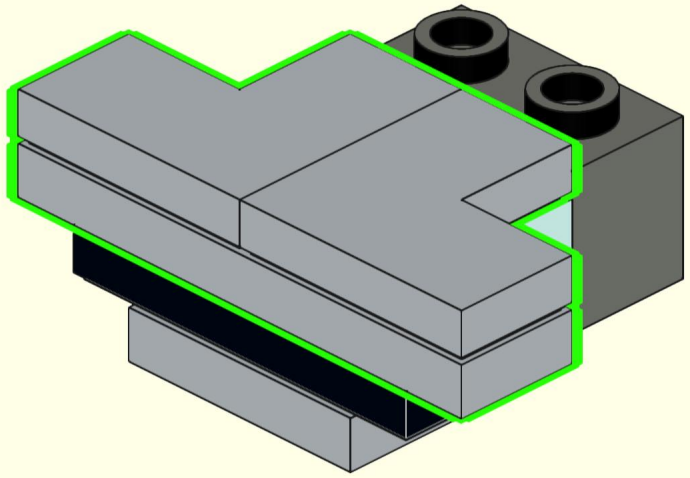

78

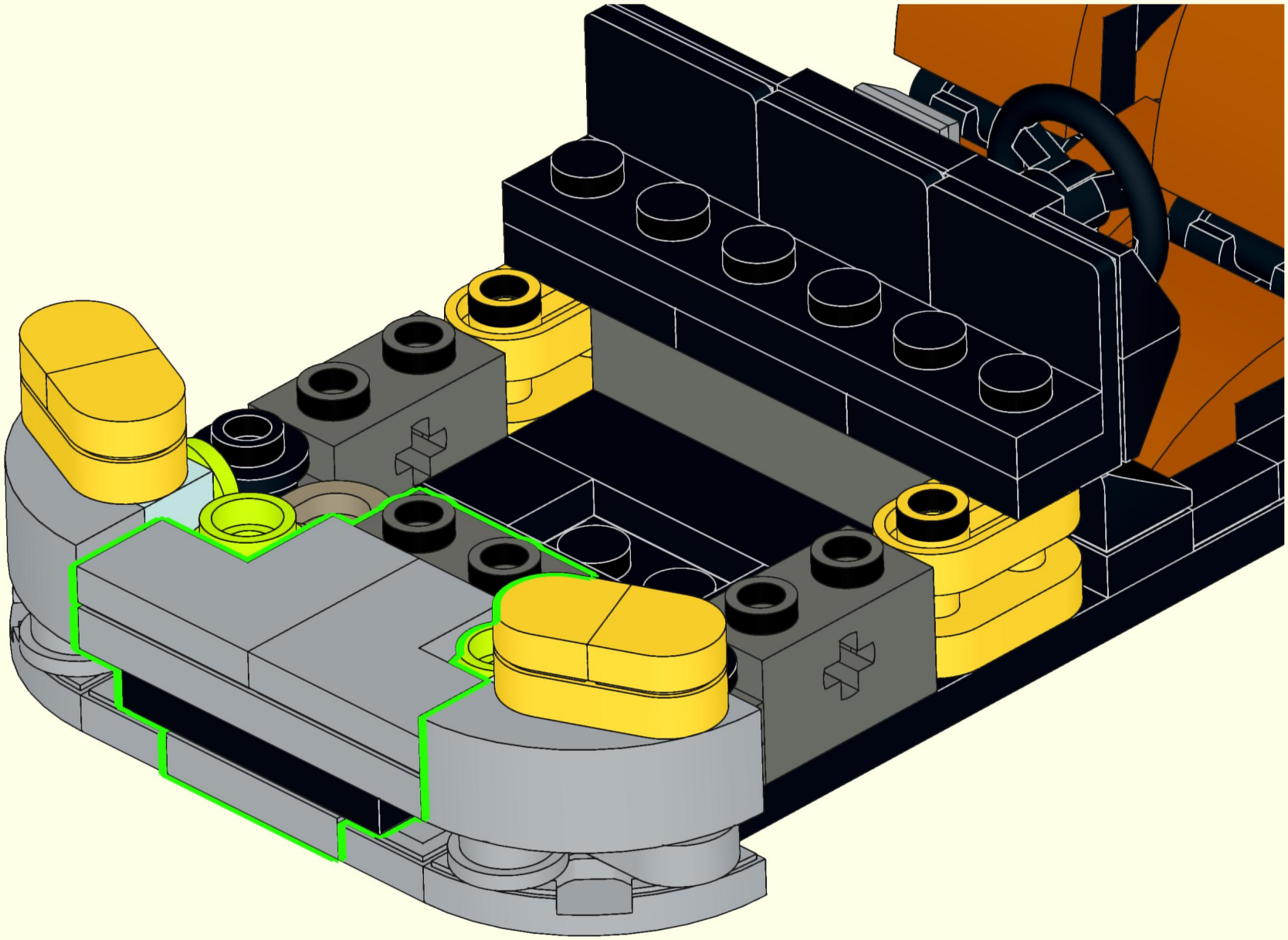

79

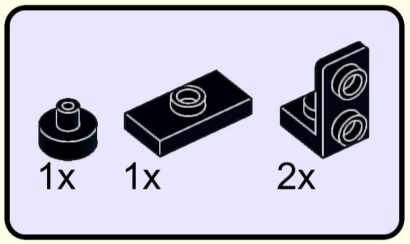

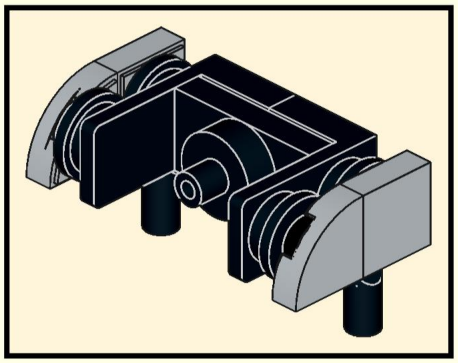

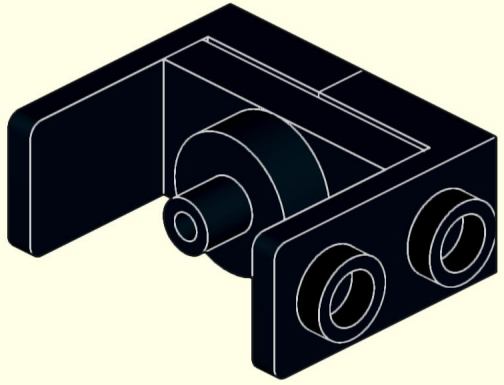

80

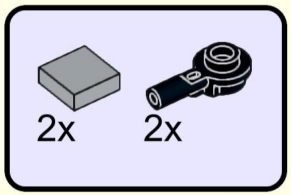

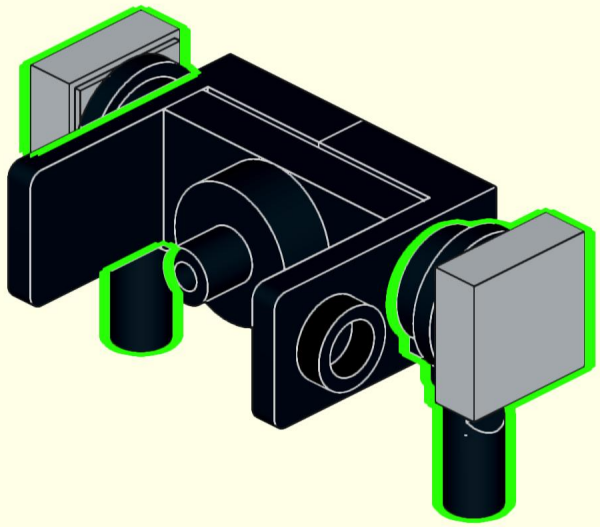

81

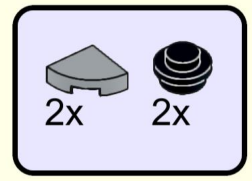

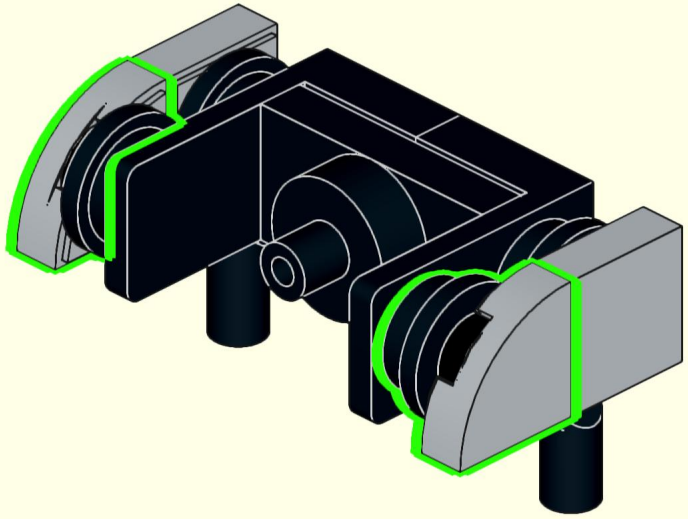

82

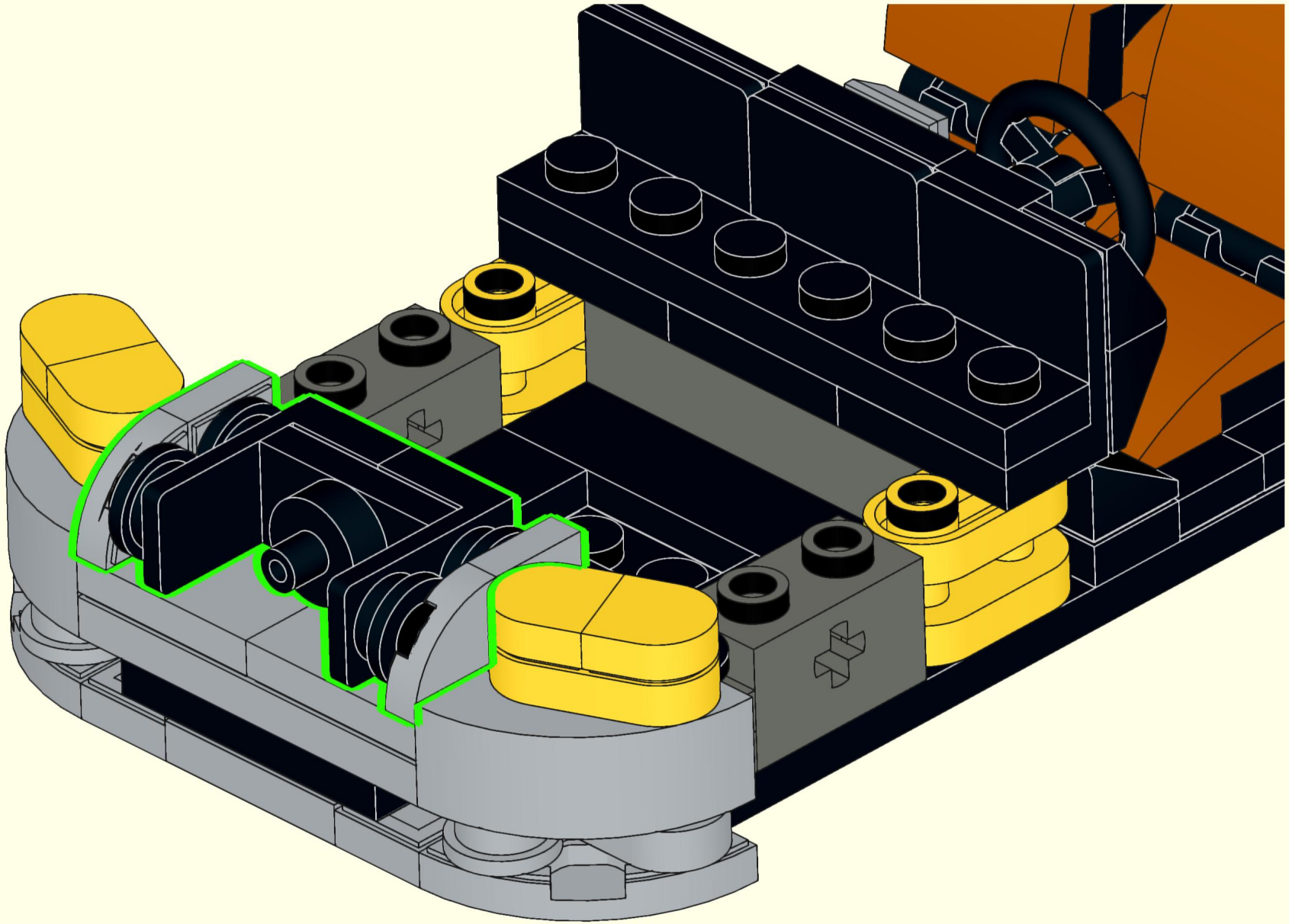

83

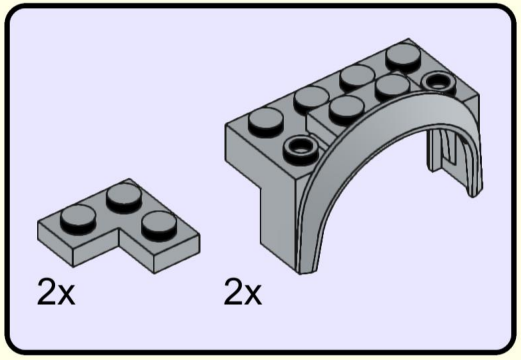

84

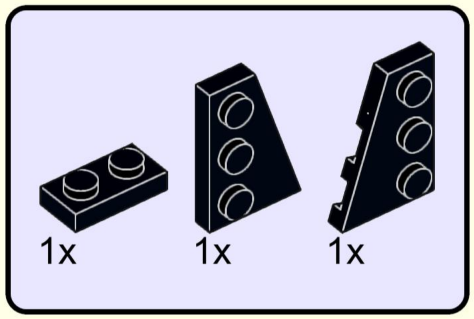

85

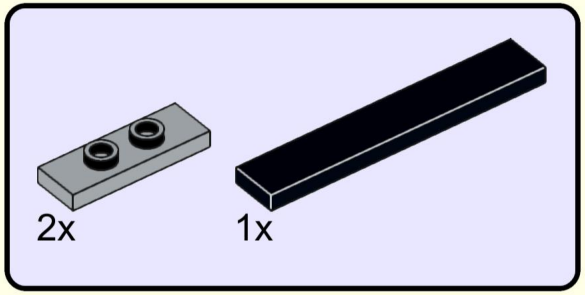

86

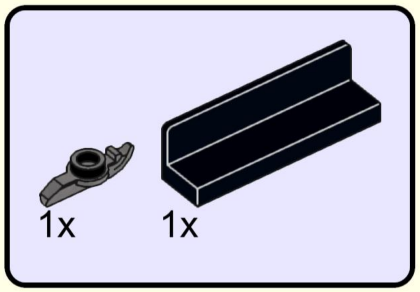

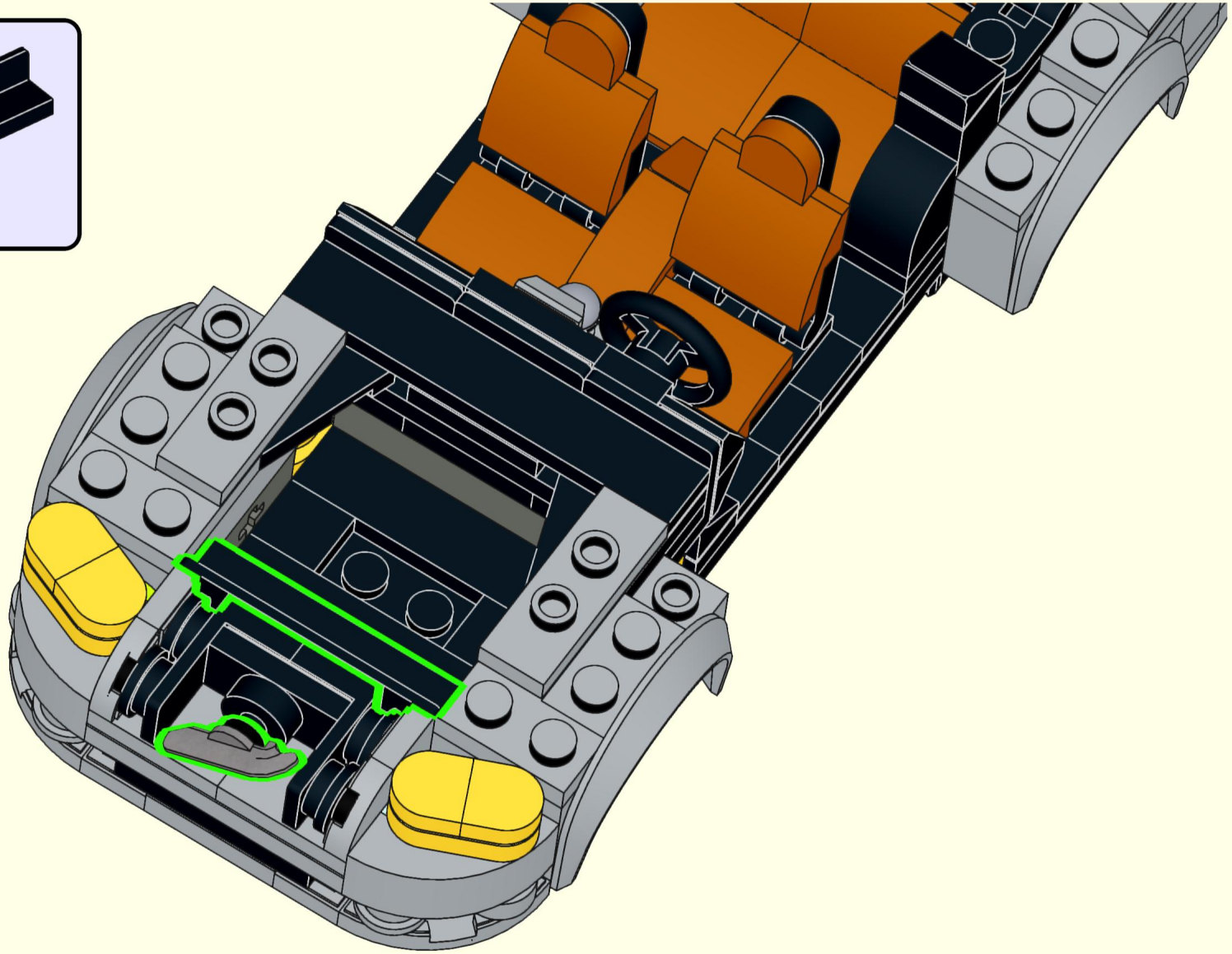

87

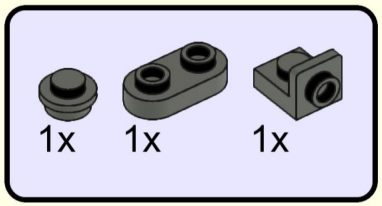

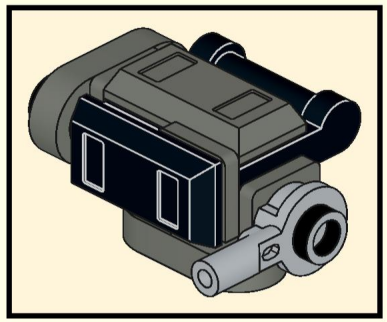

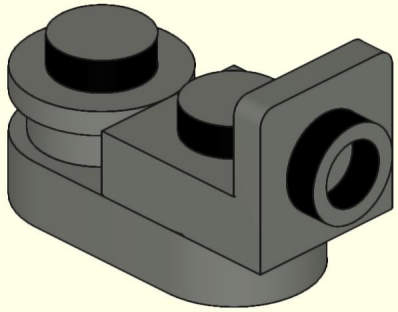

88

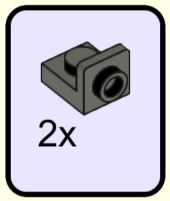

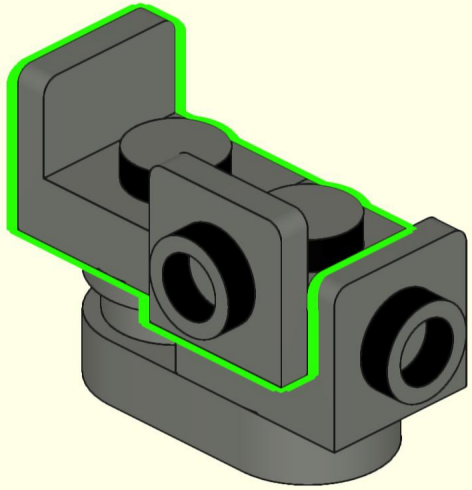

89

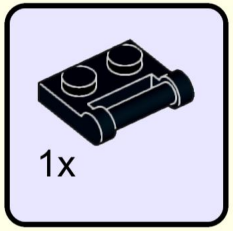

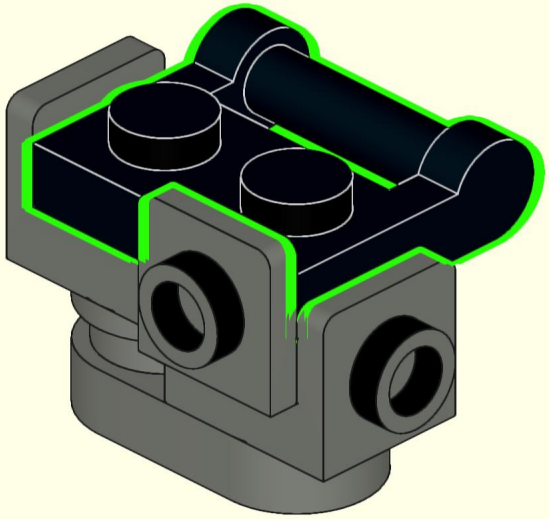

90

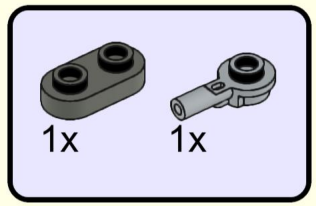

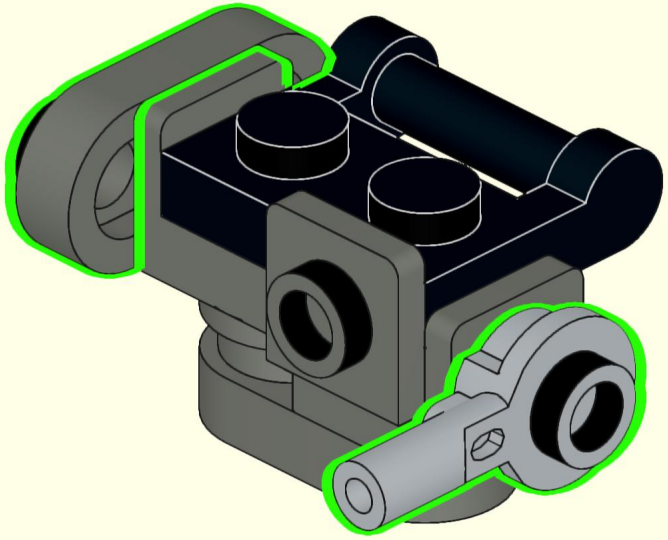

91

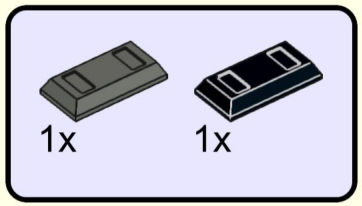

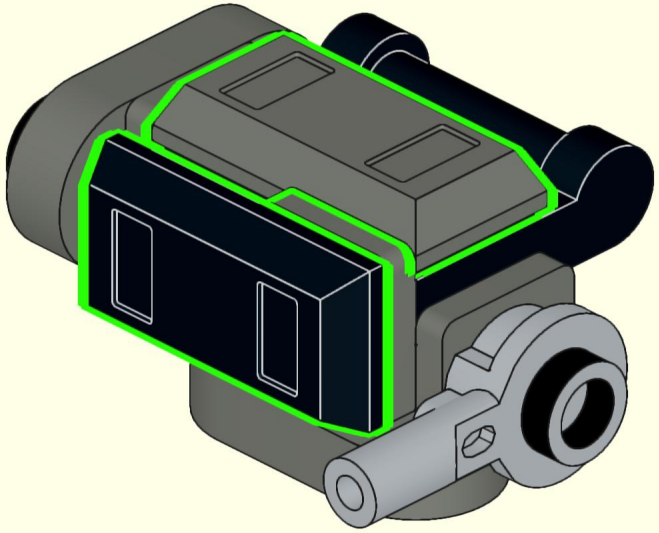

92

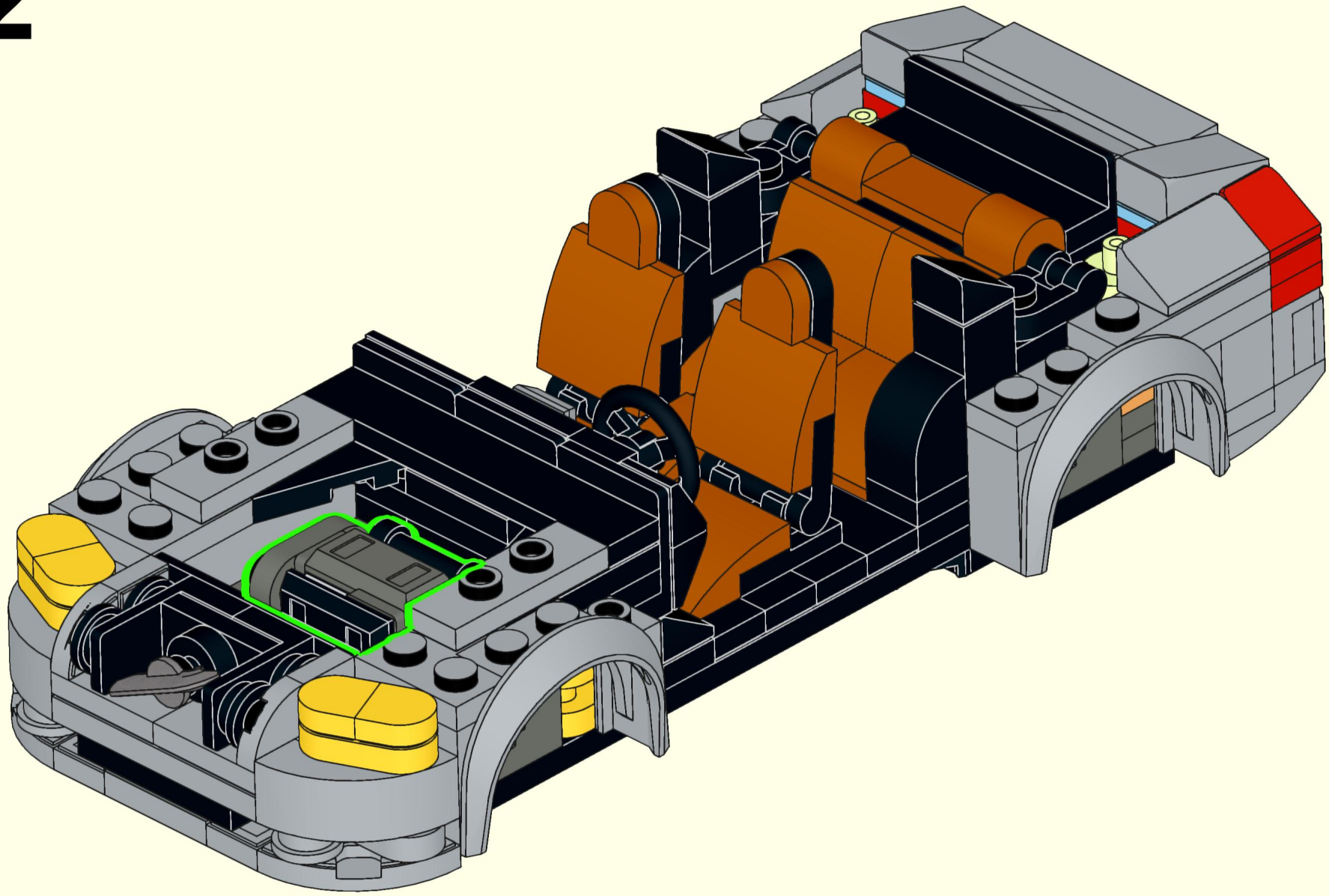

93

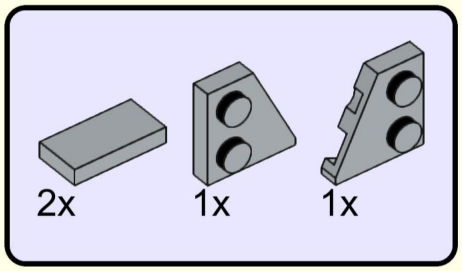

94

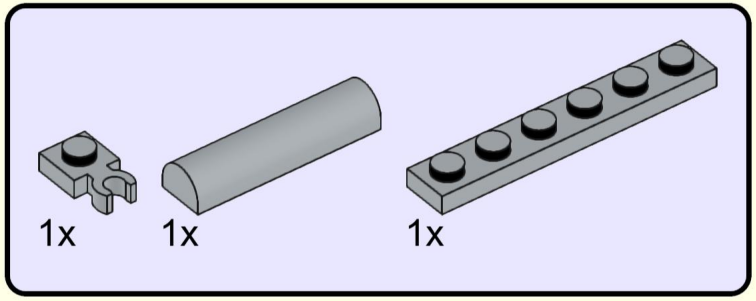

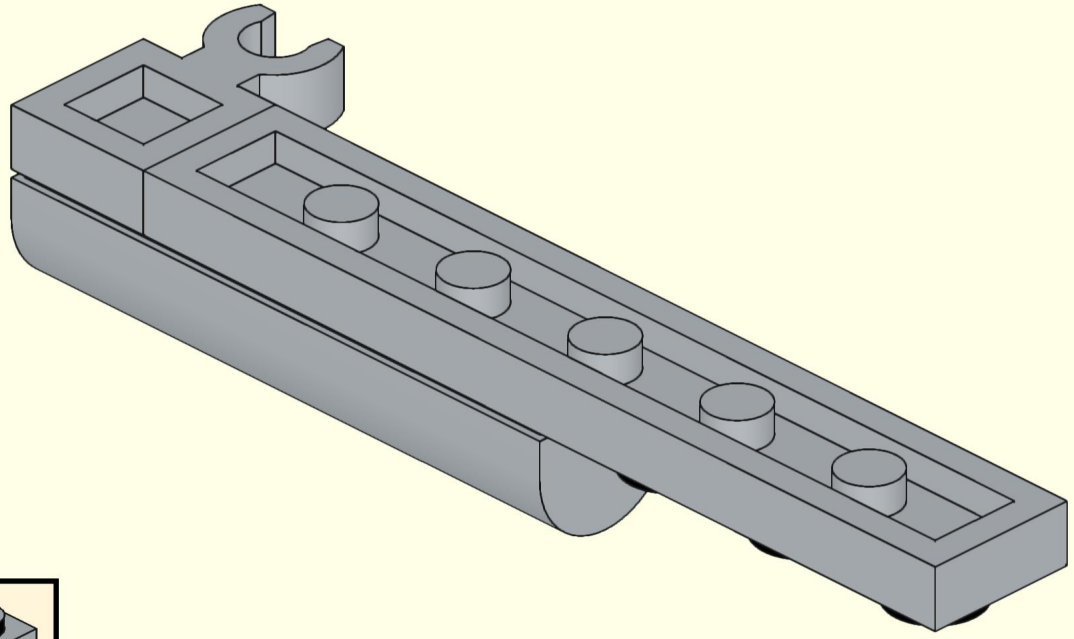

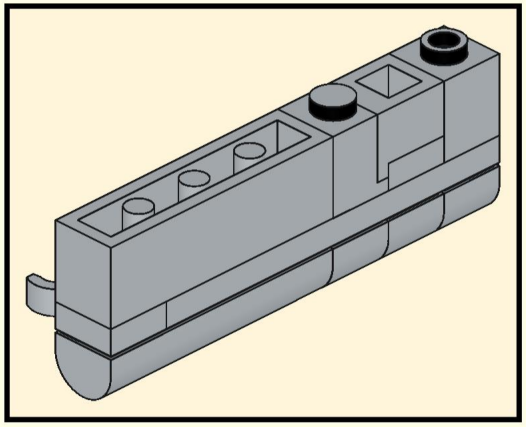

95

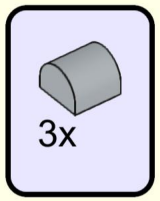

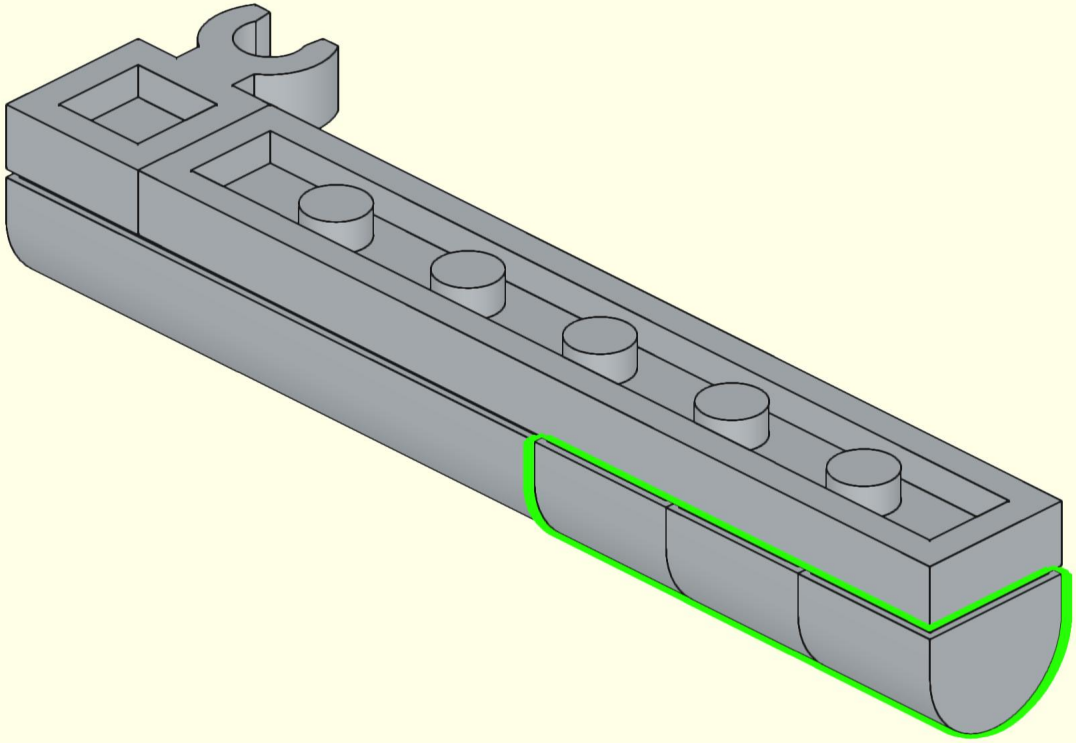

96

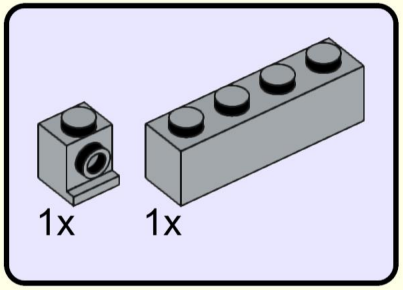

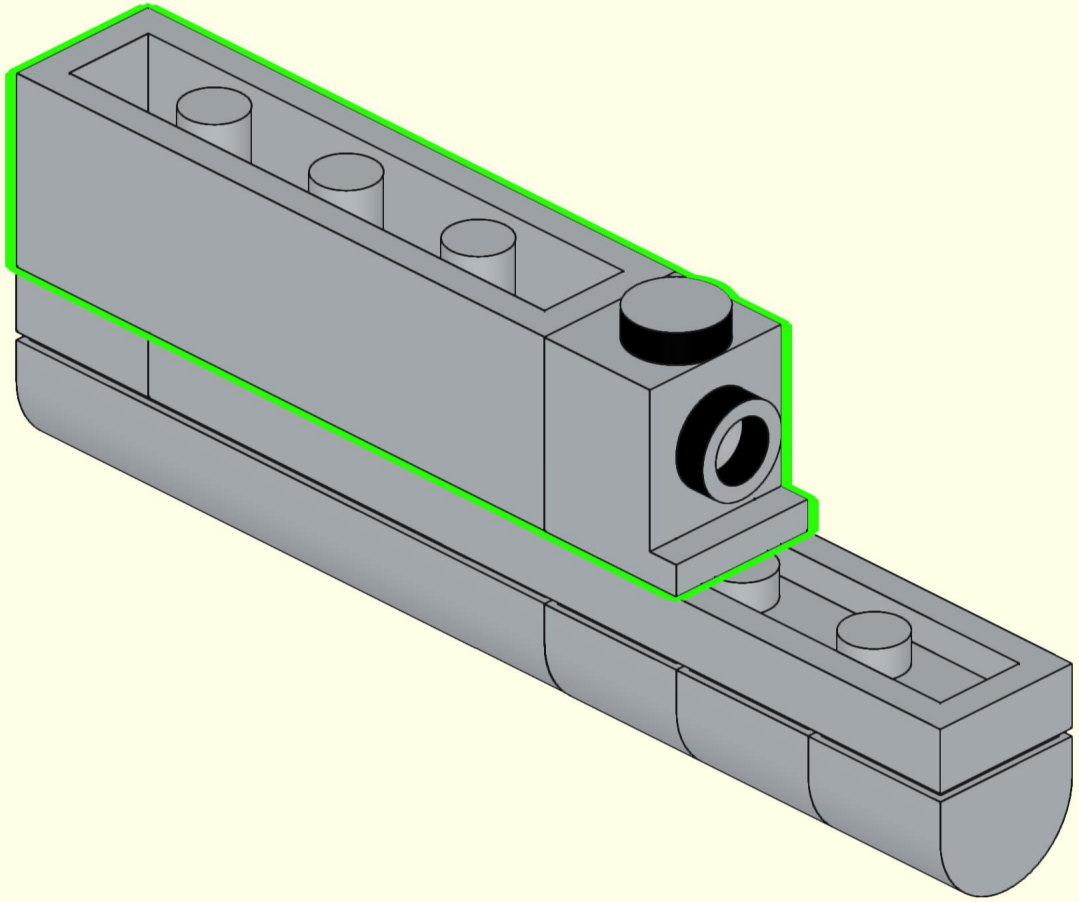

97

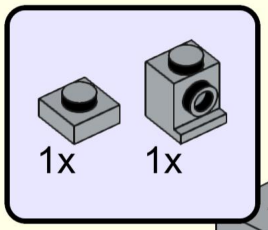

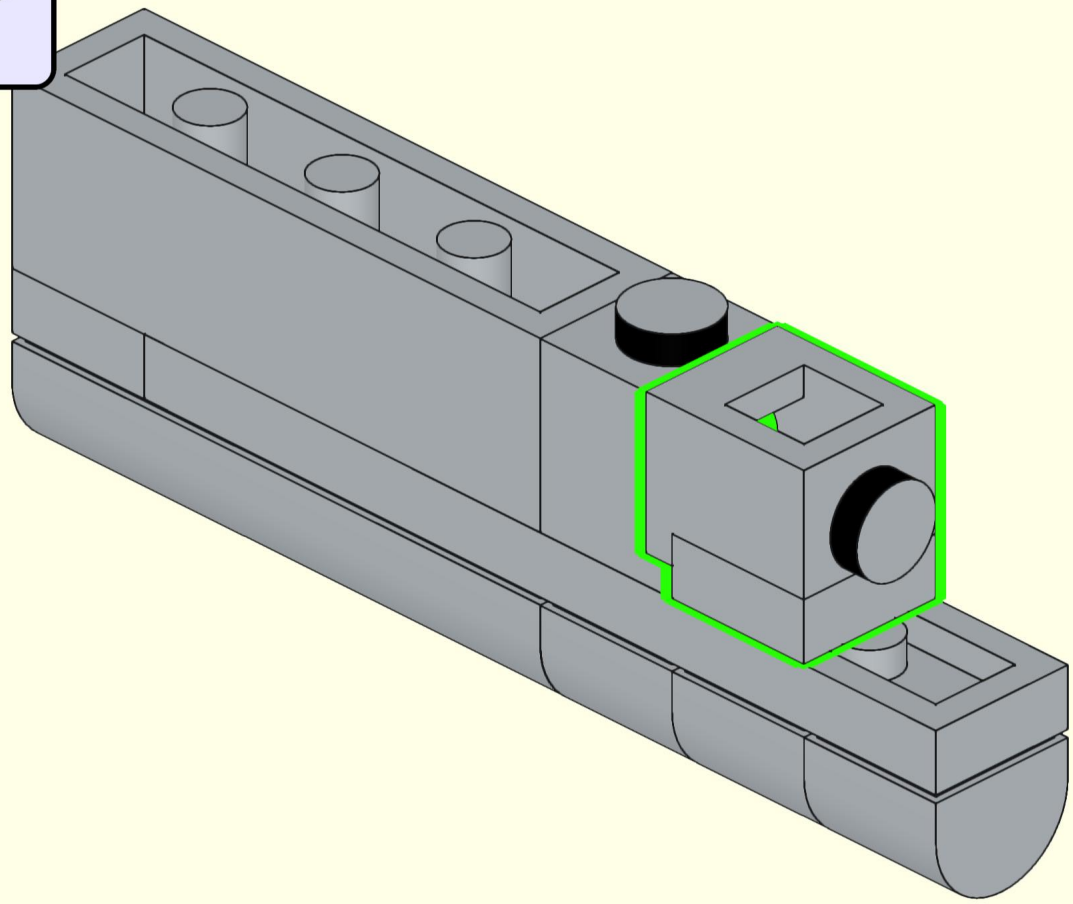

98

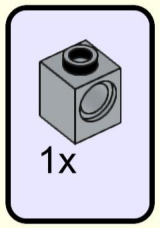

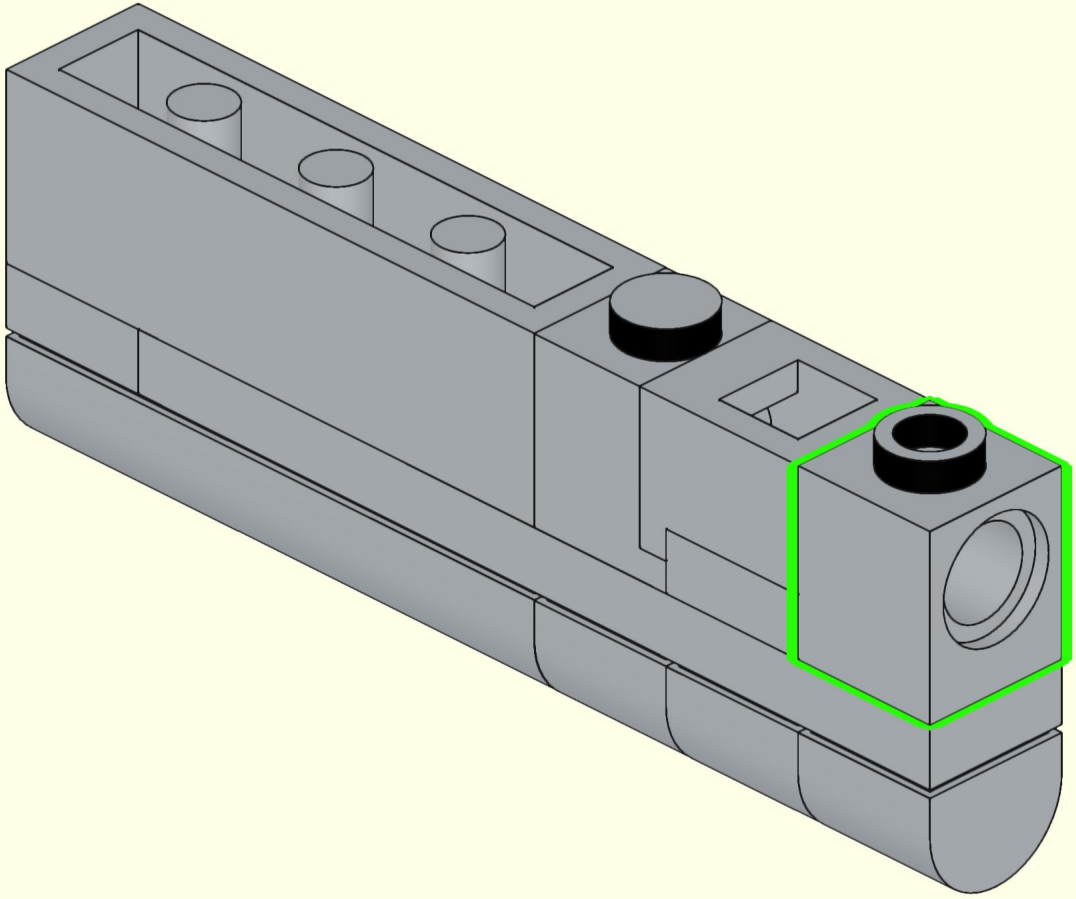

99

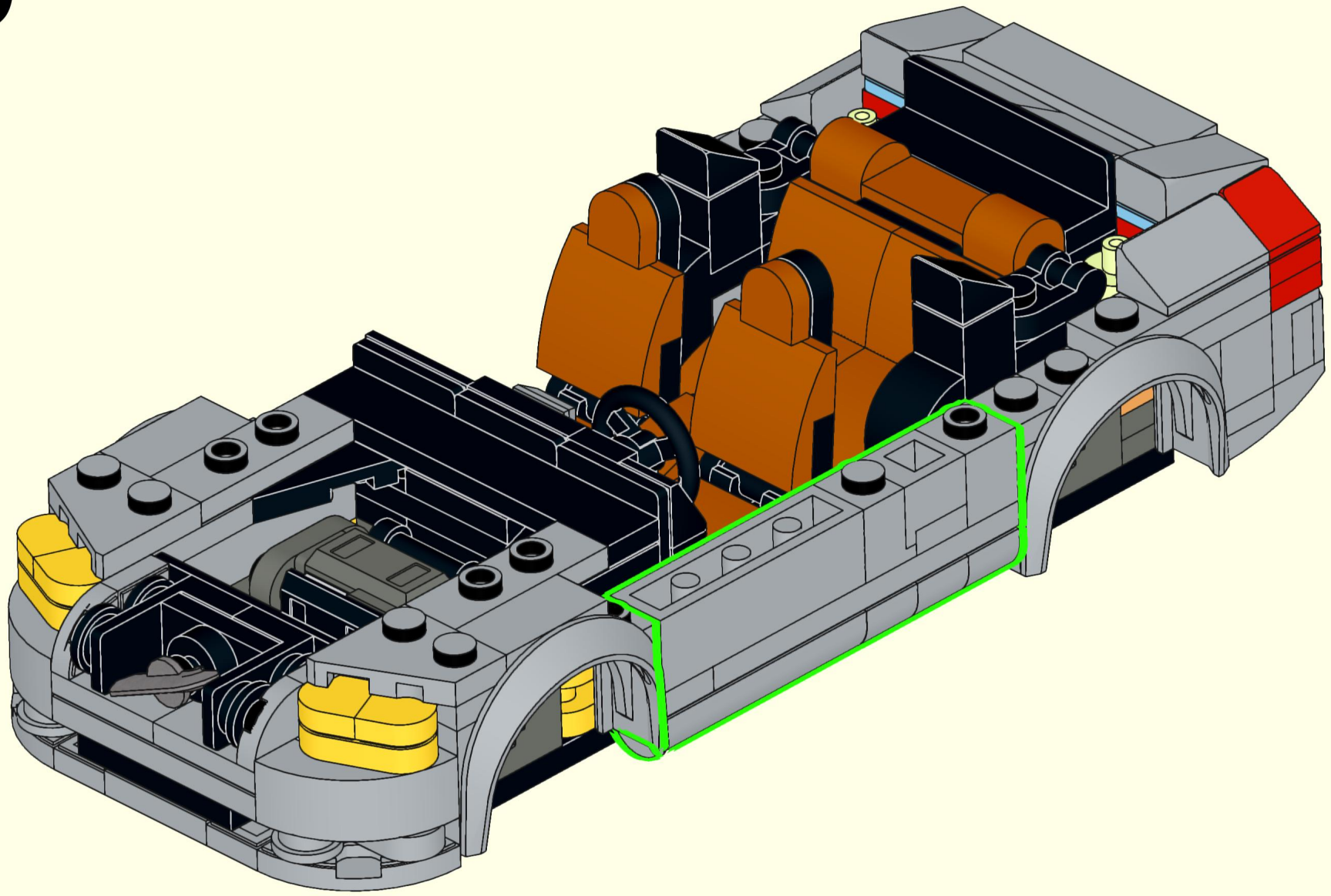

100

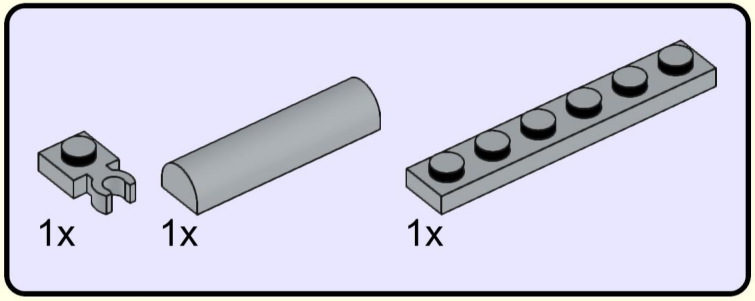

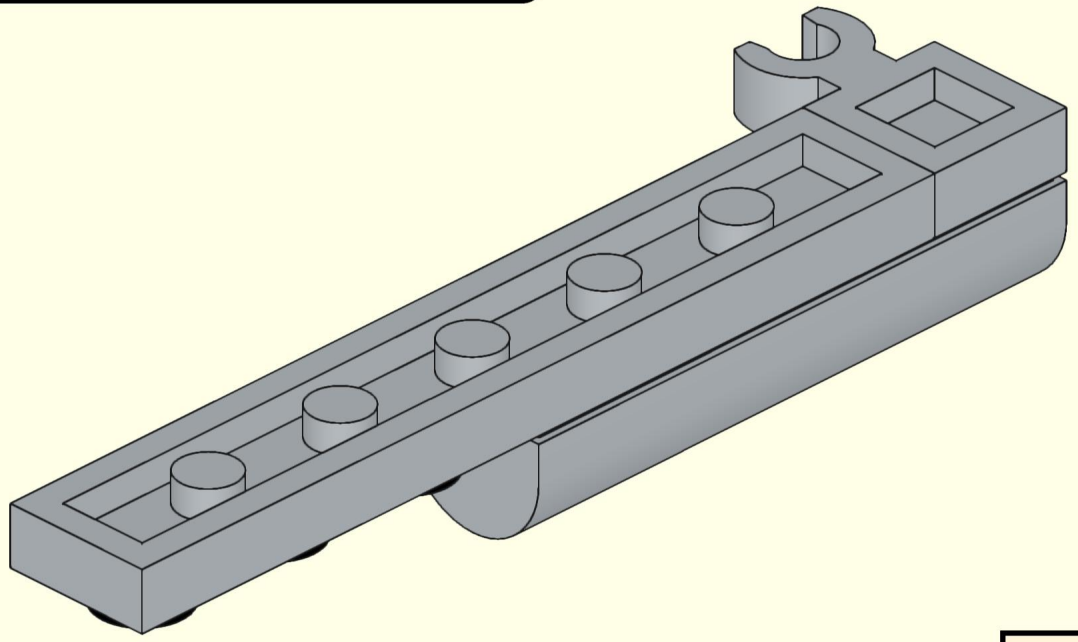

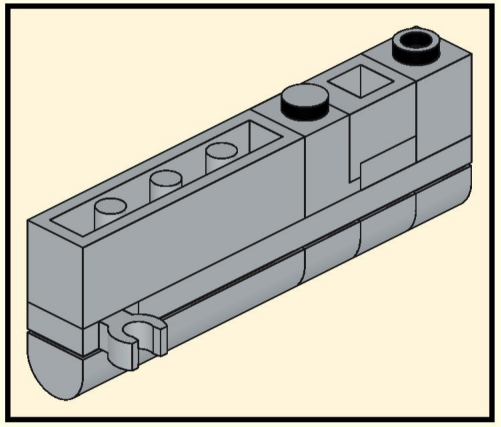

101

3x

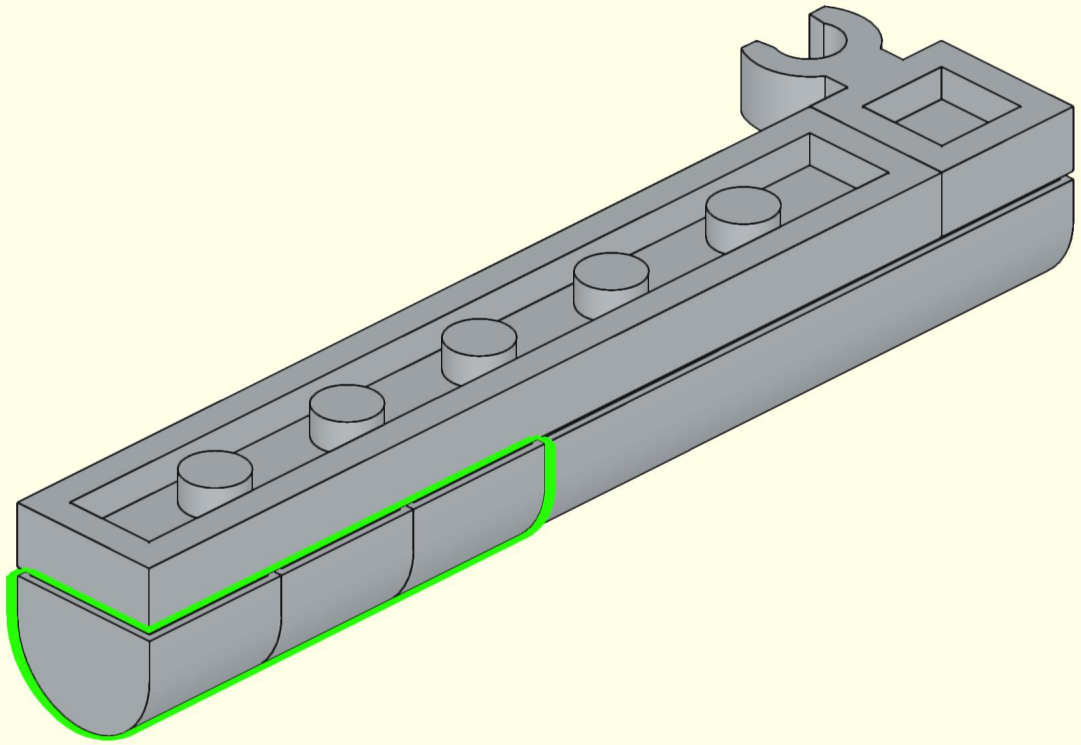

102

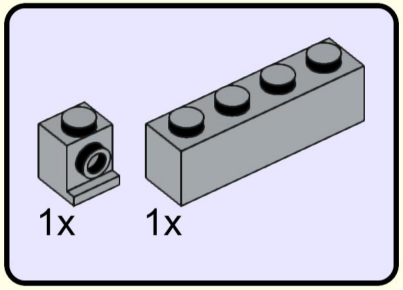

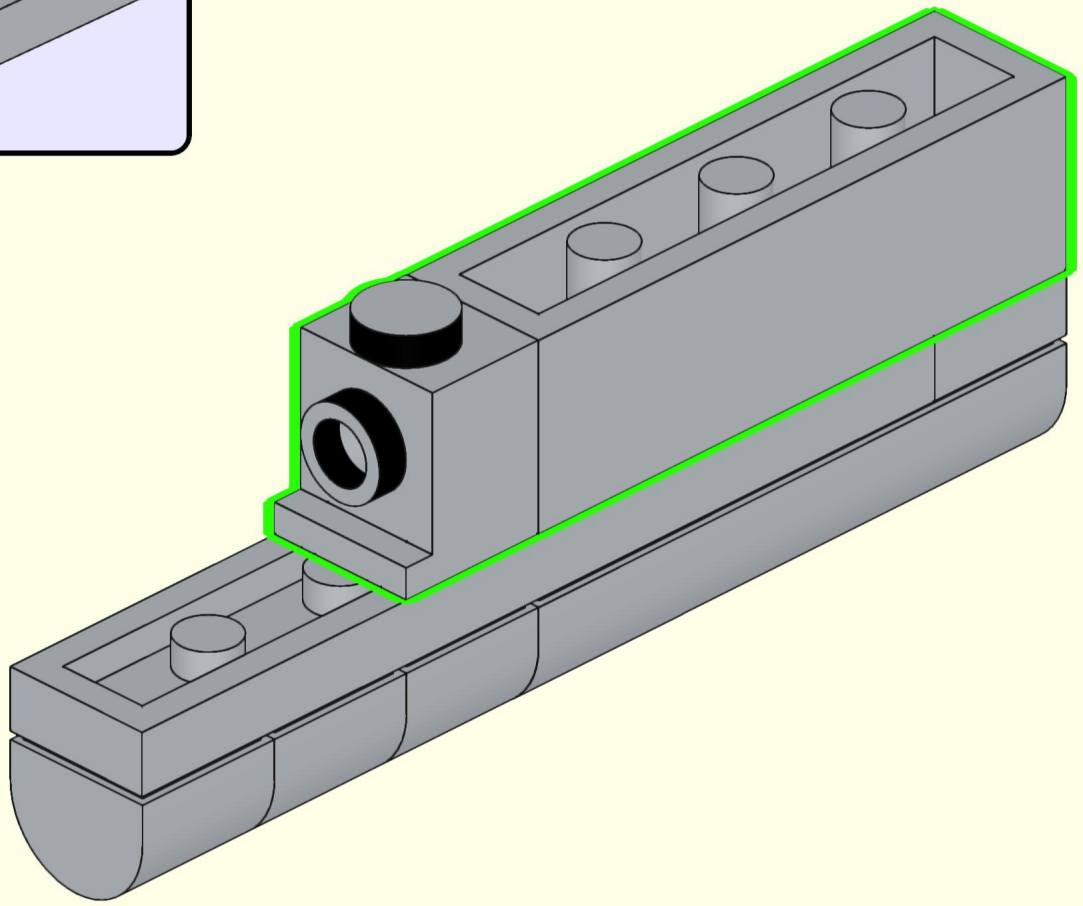

103

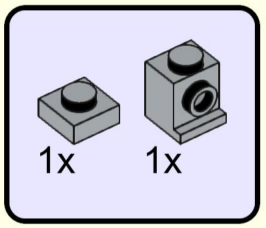

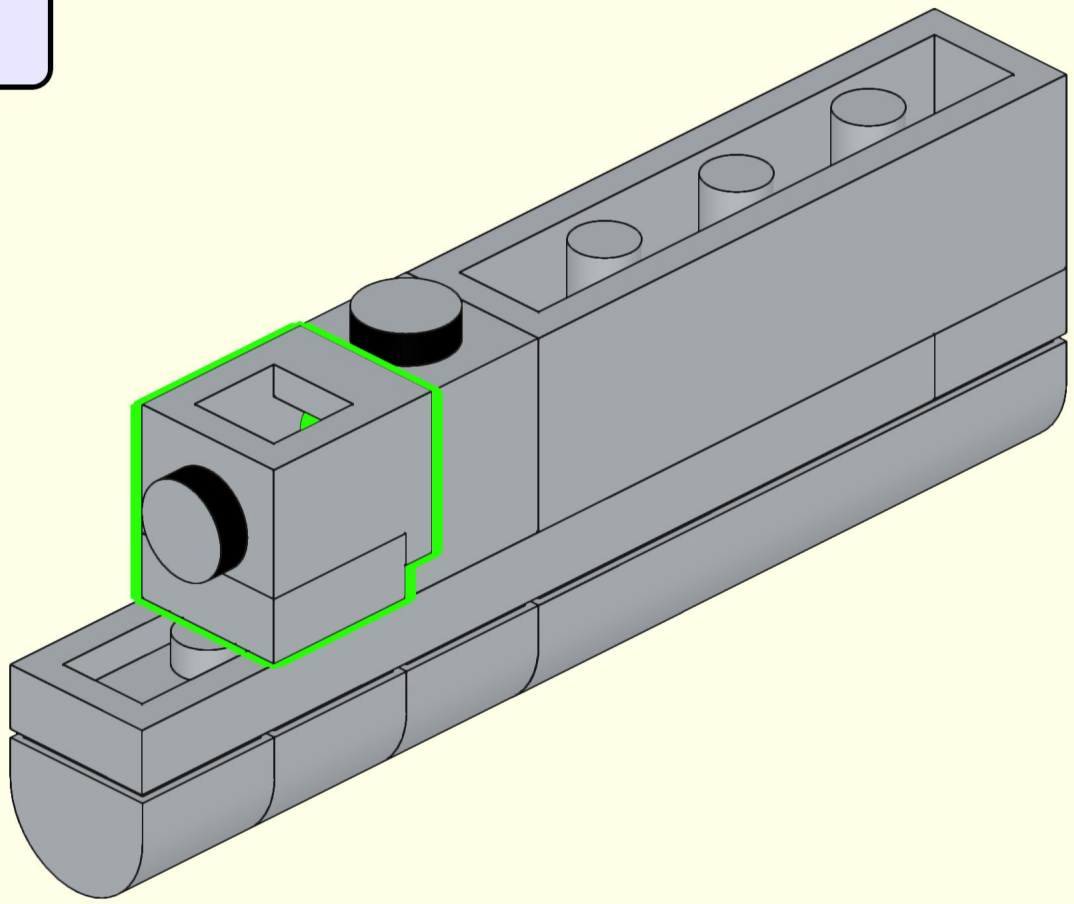

104

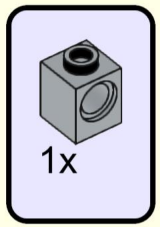

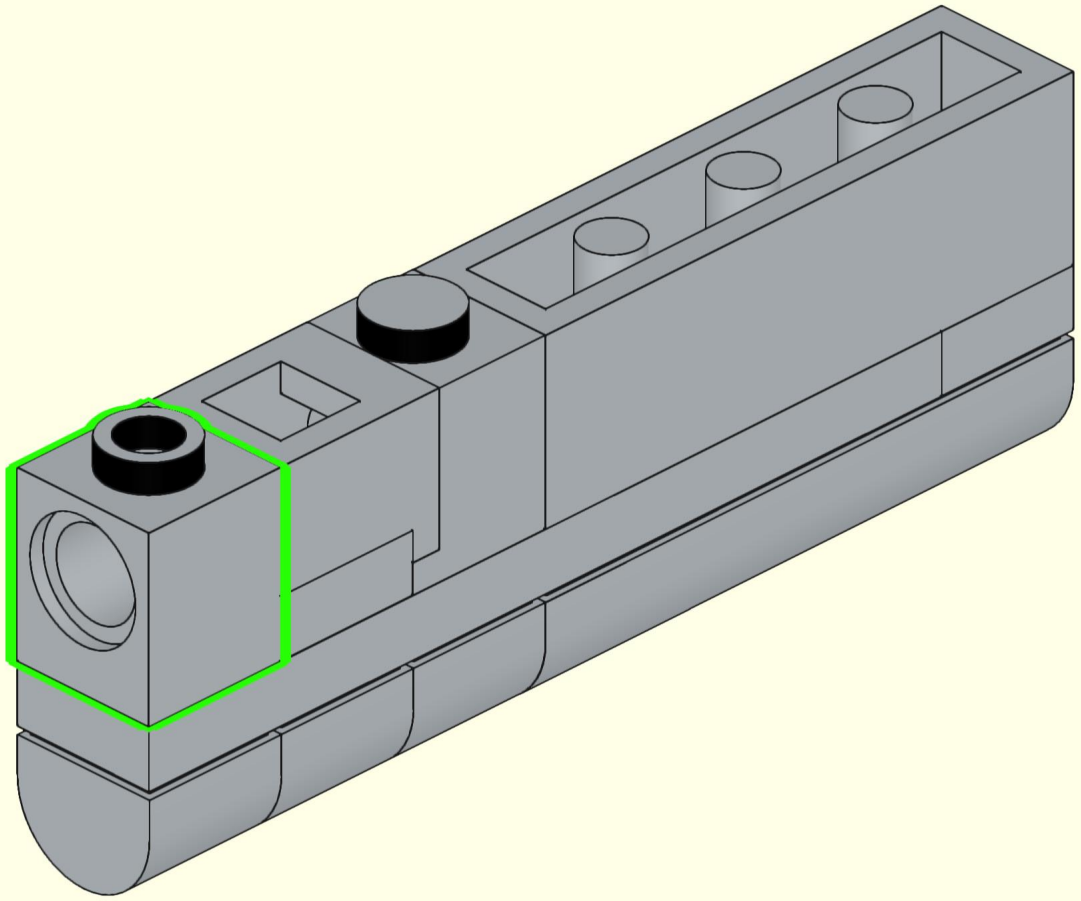

105

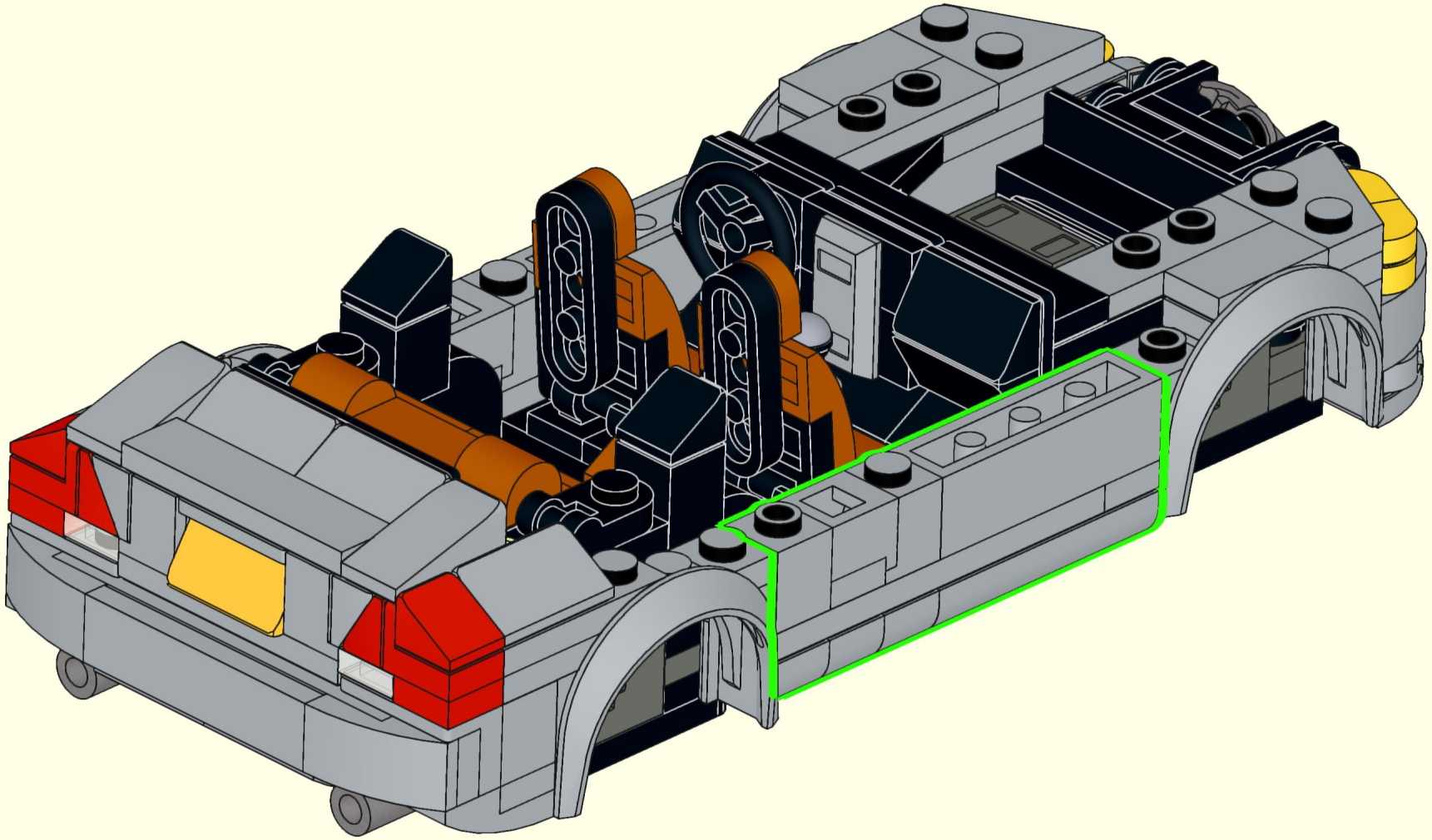

106

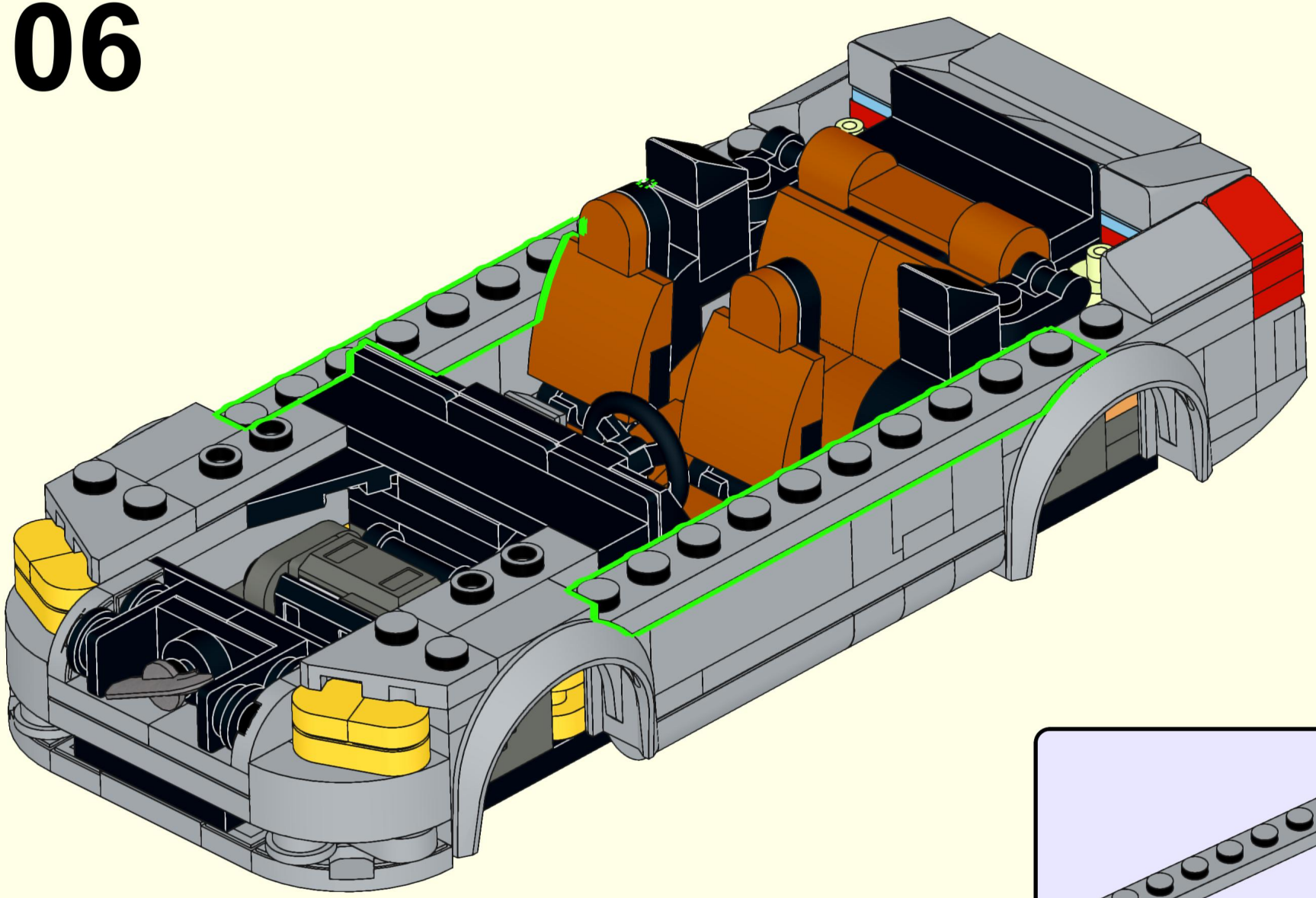

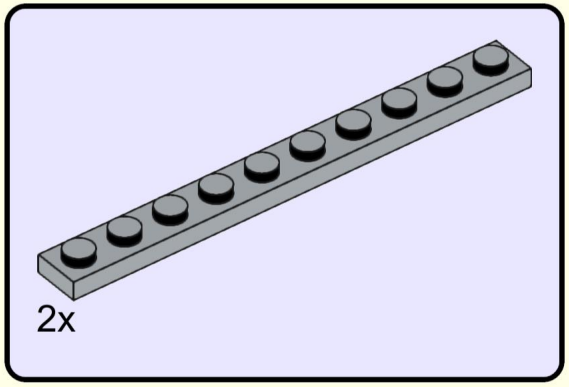

107

4x

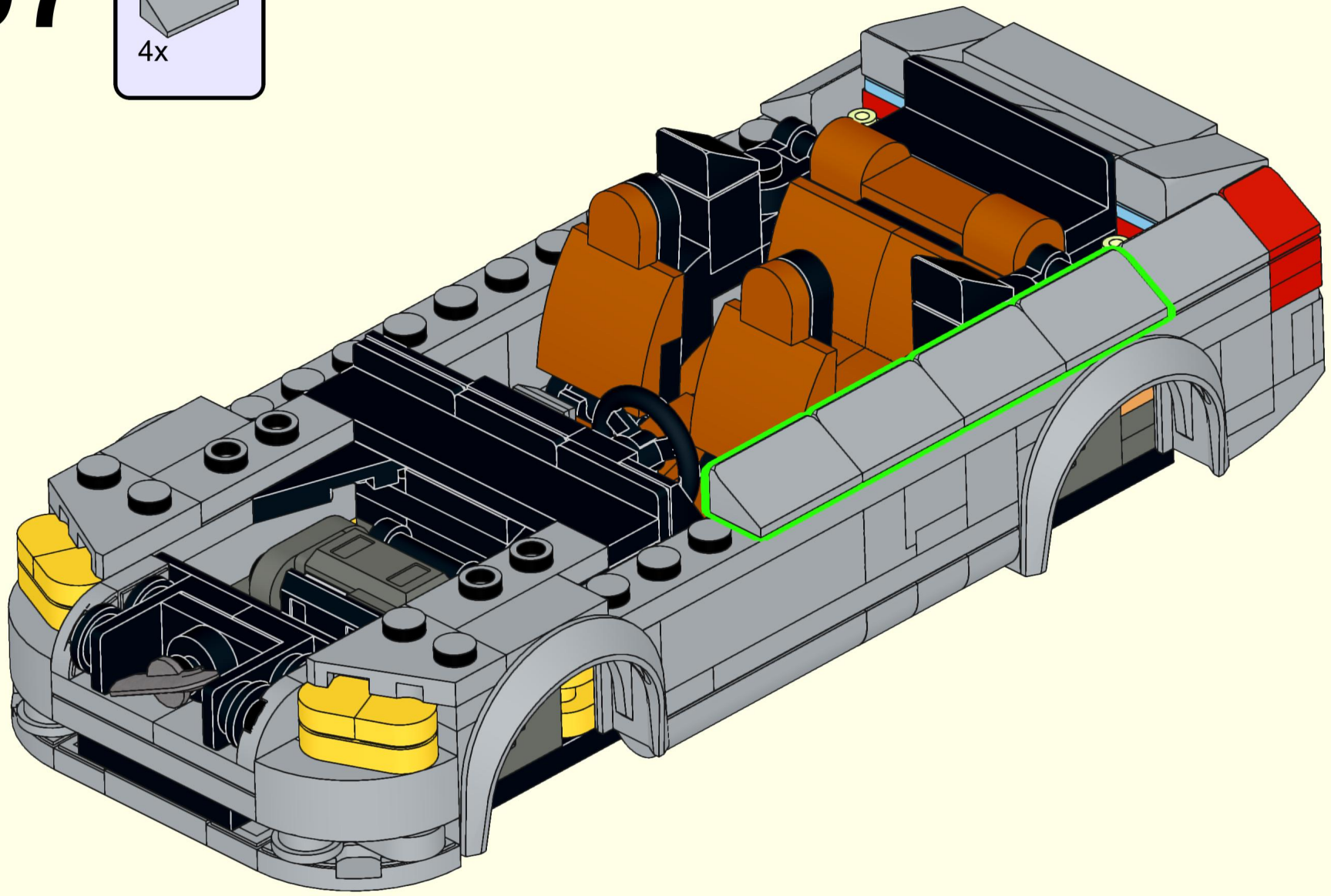

108

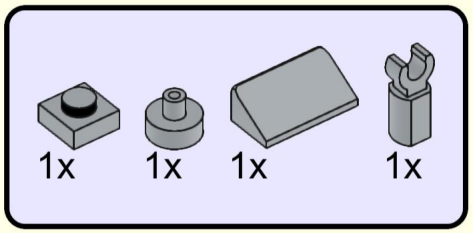

109

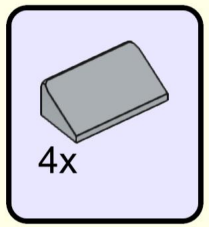

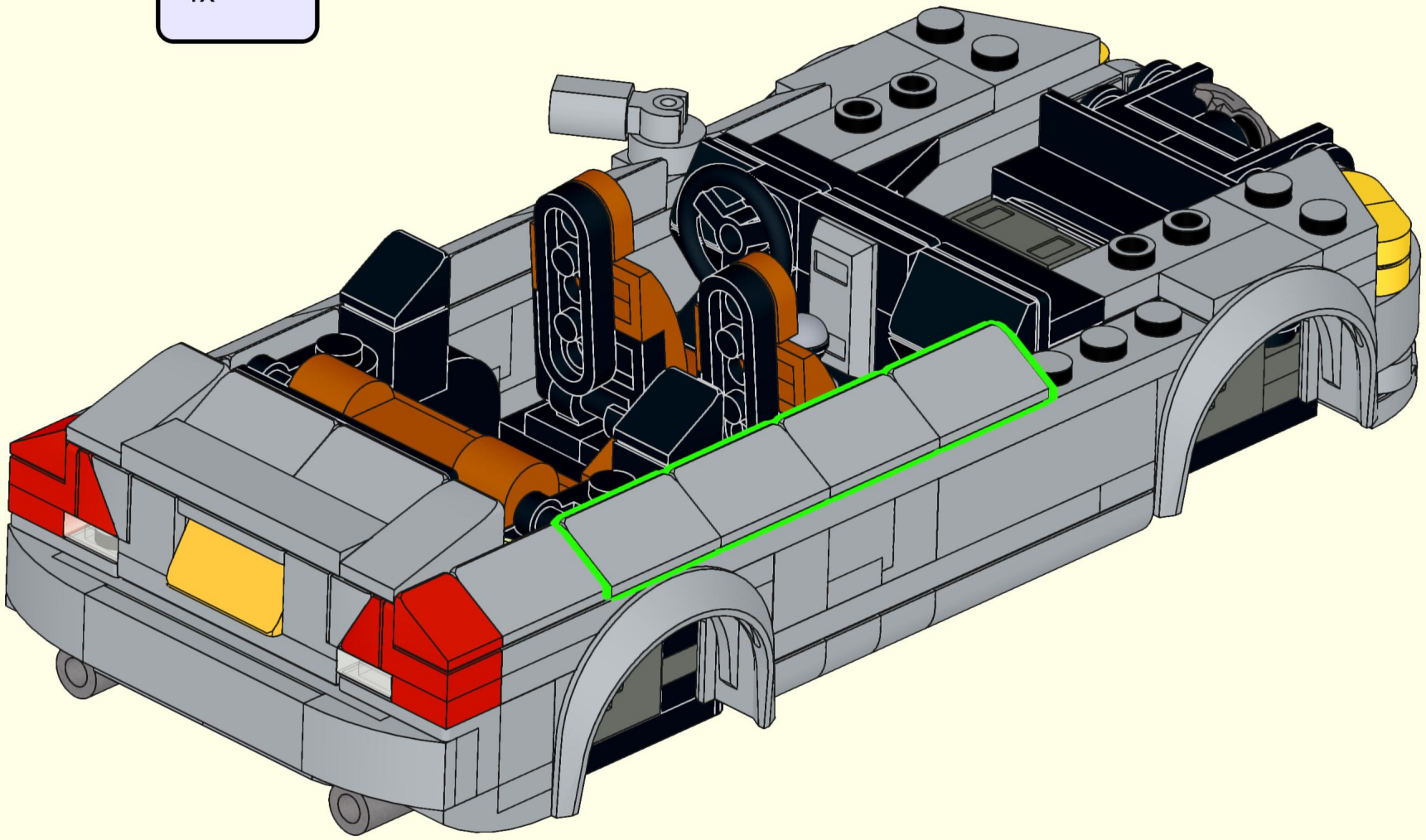

110

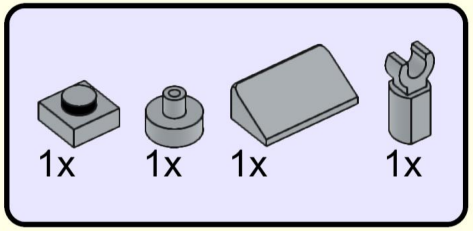

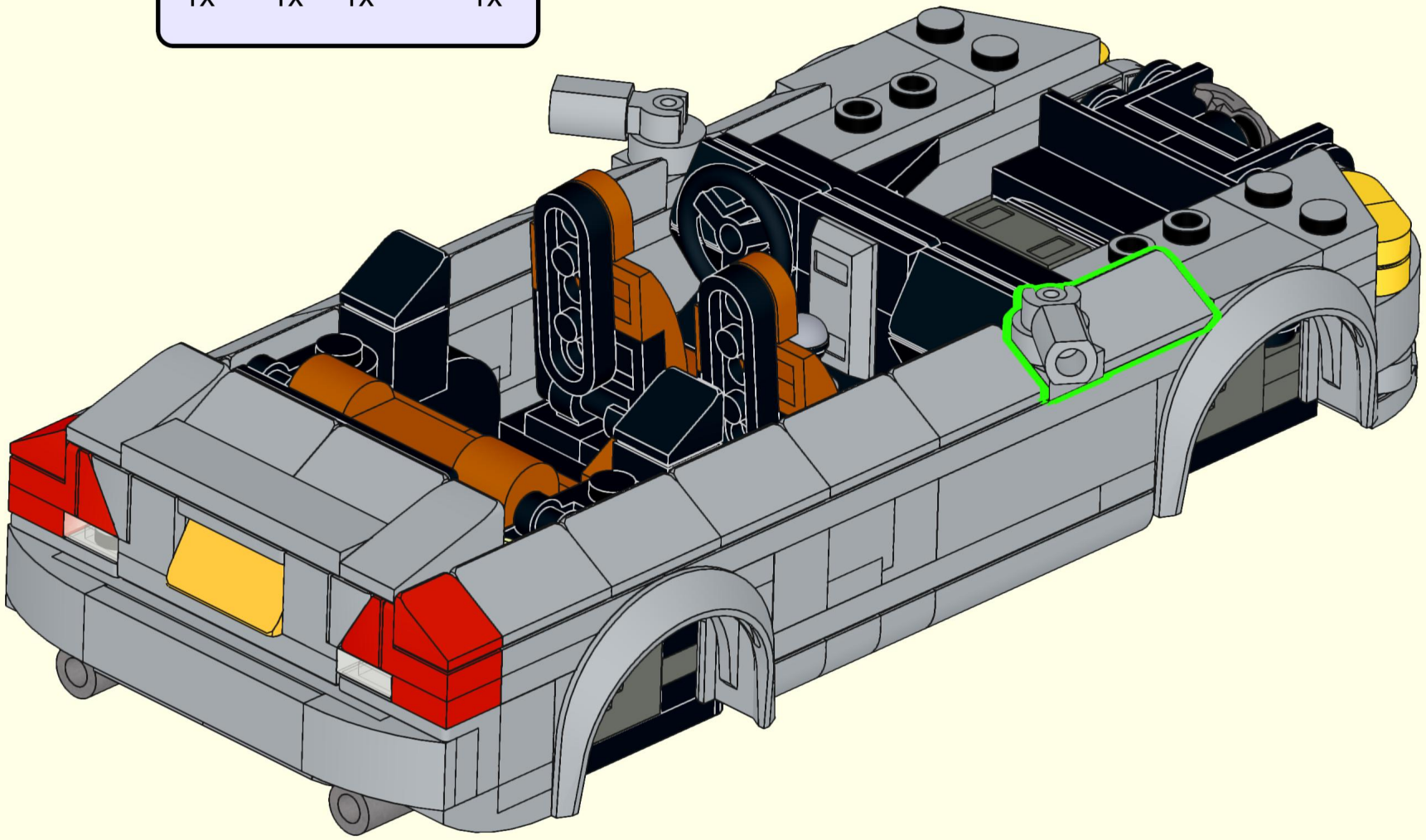

111

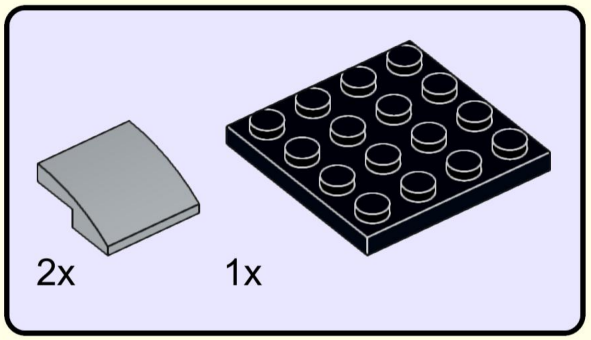

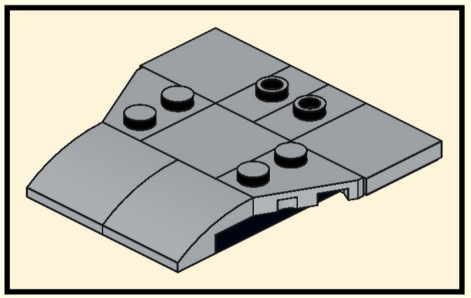

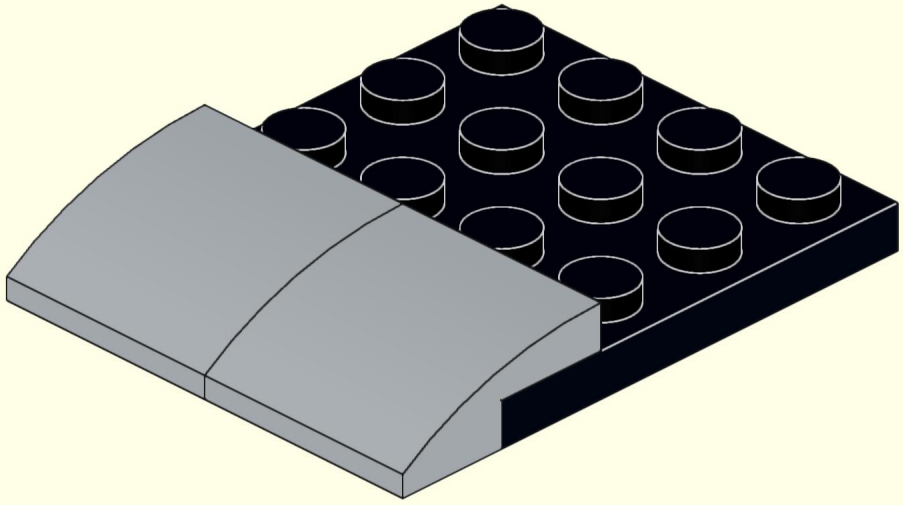

112

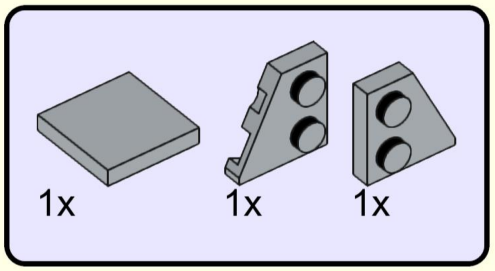

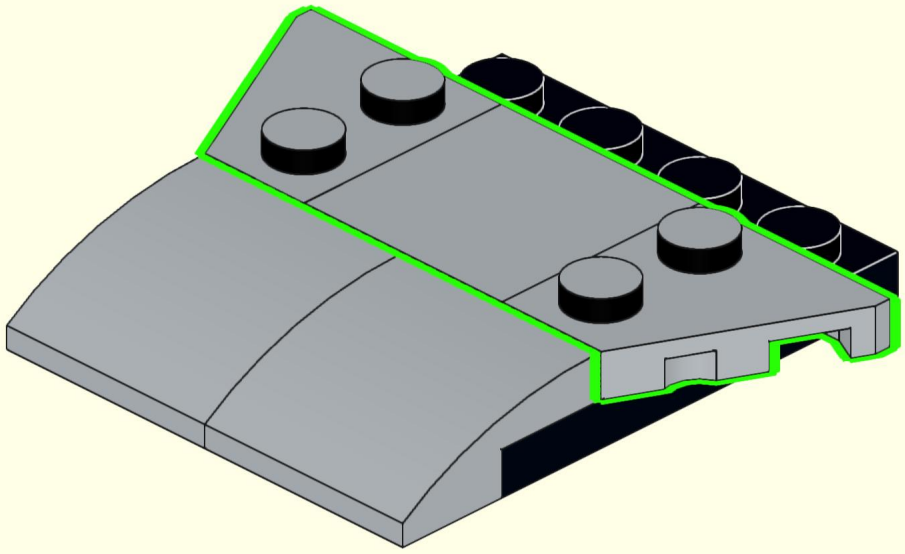

113

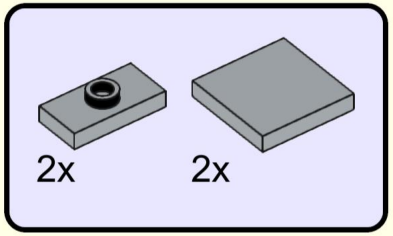

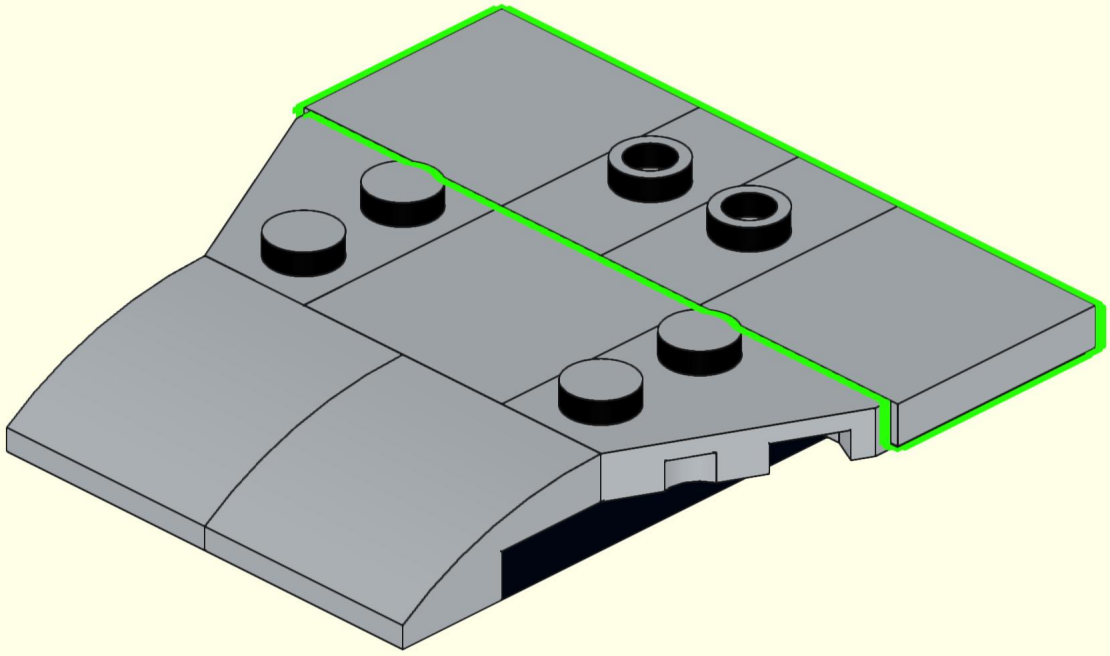

114

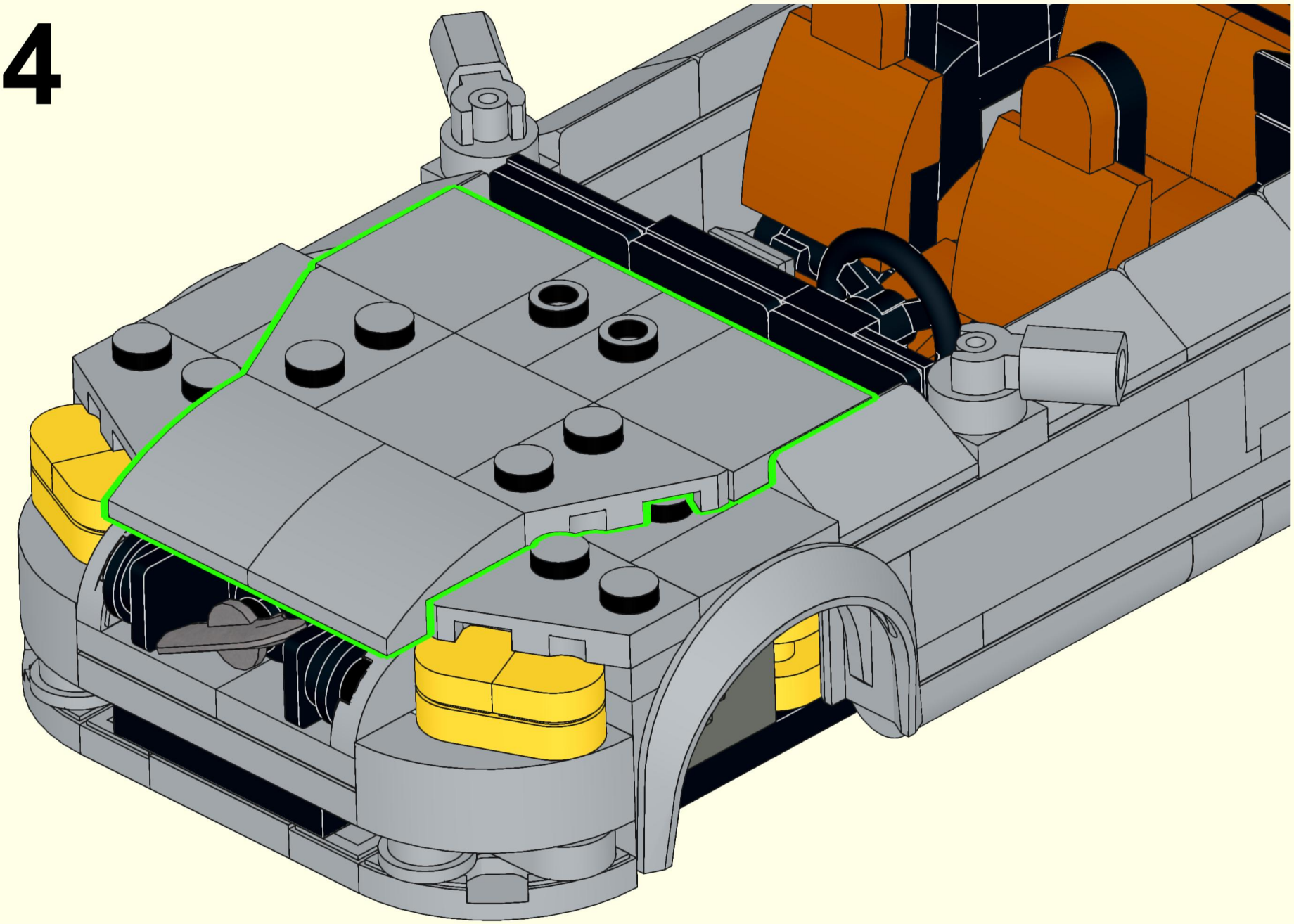

115

2x

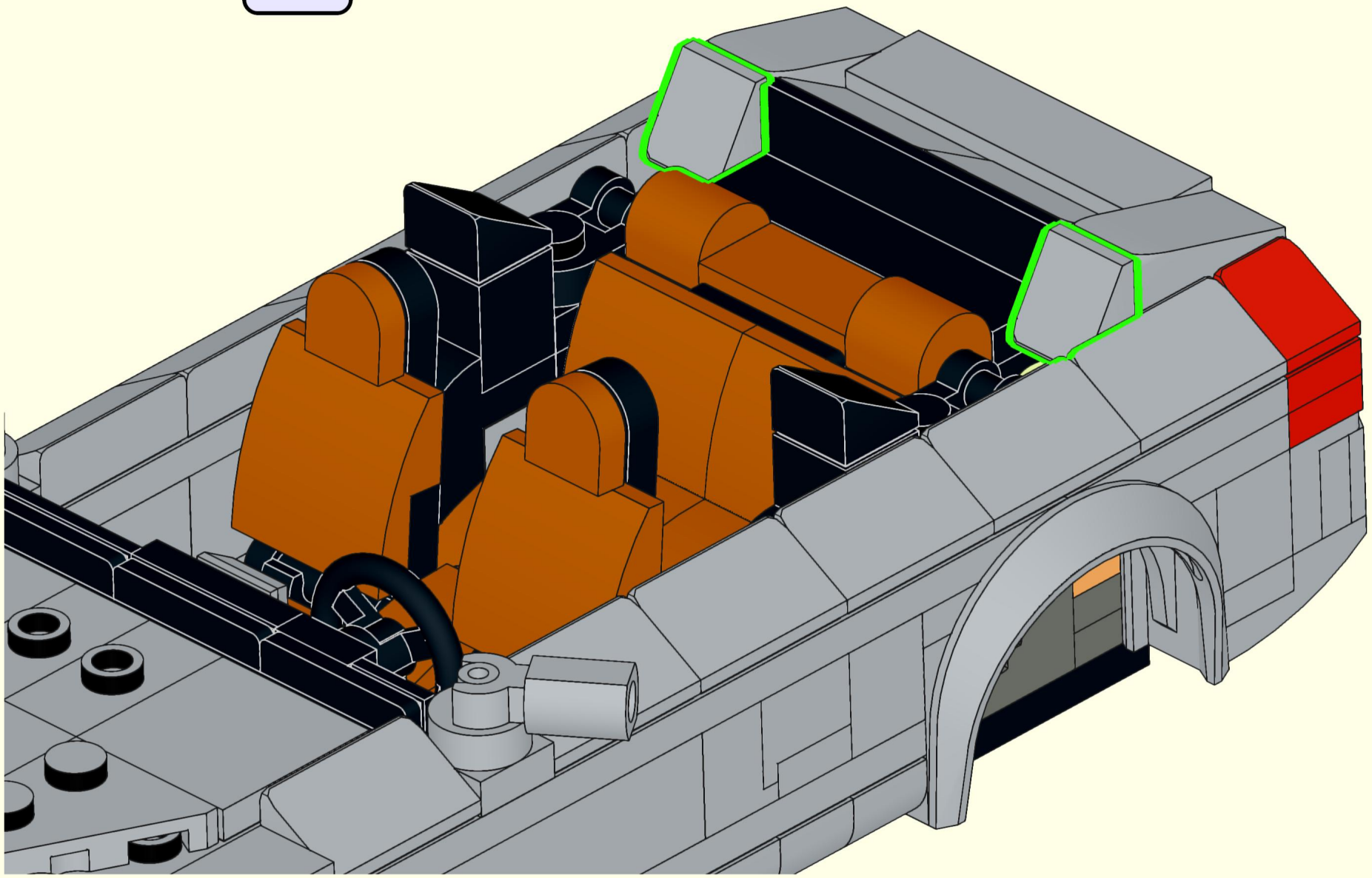

116

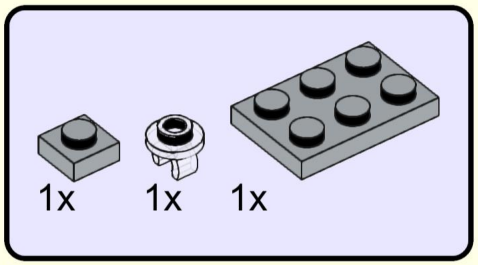

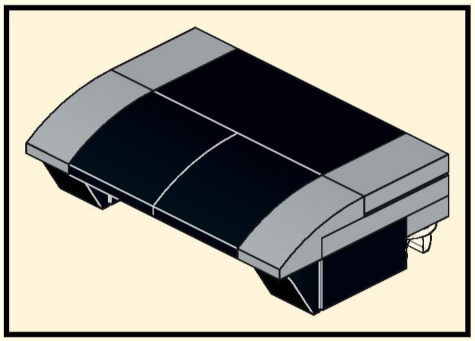

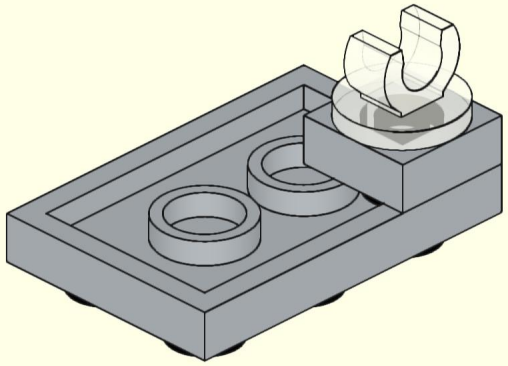

117

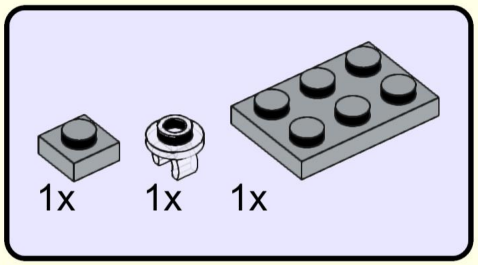

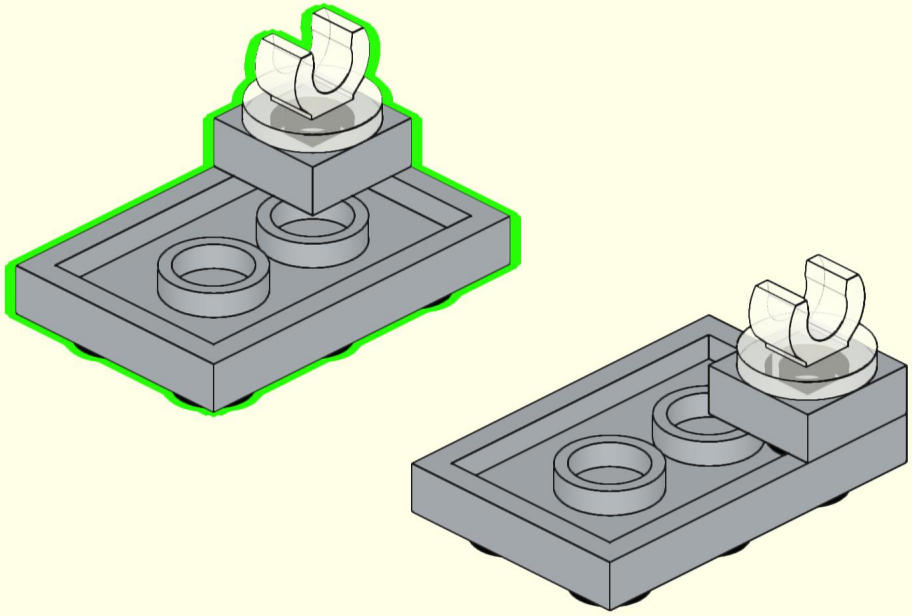

118

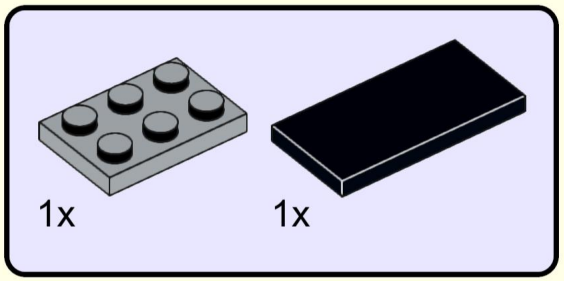

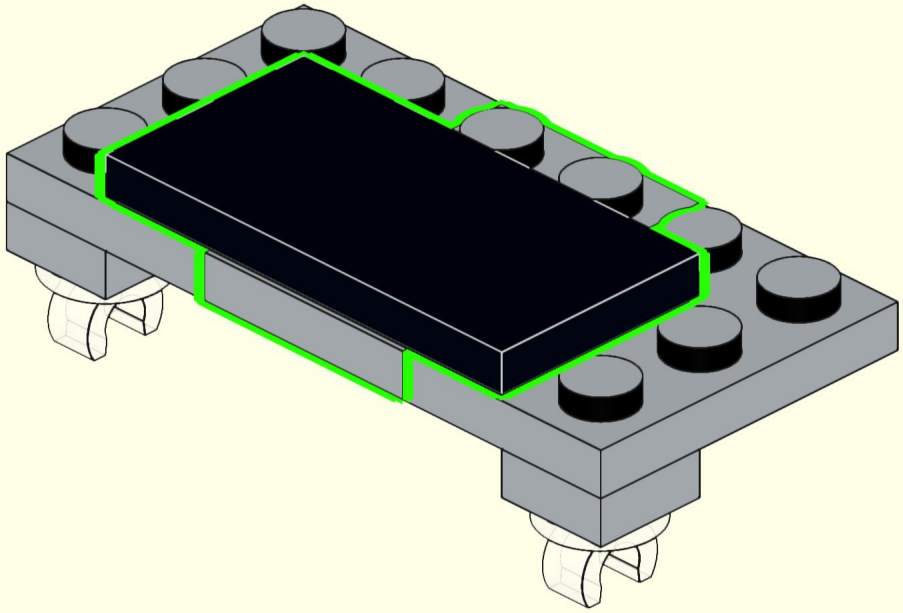

119

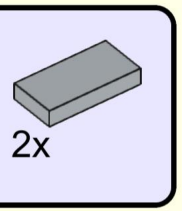

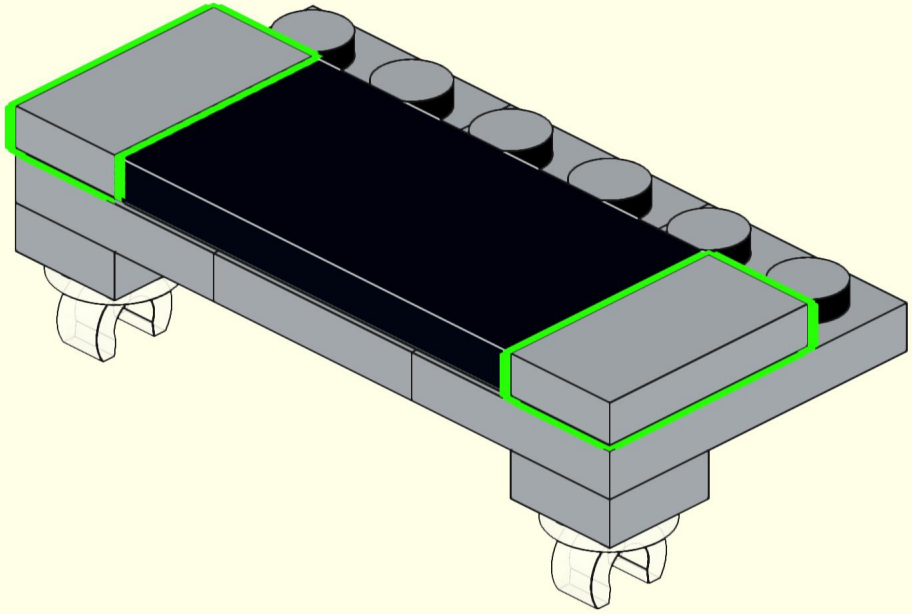

120

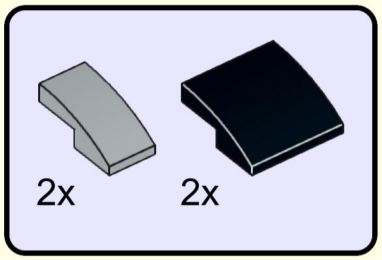

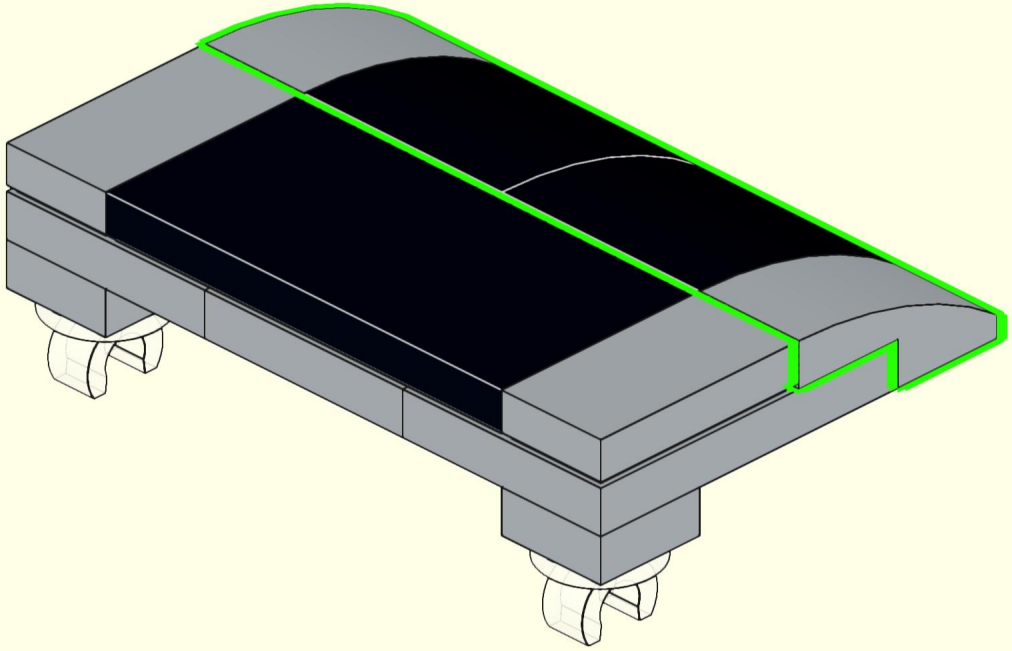

121

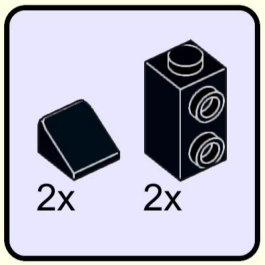

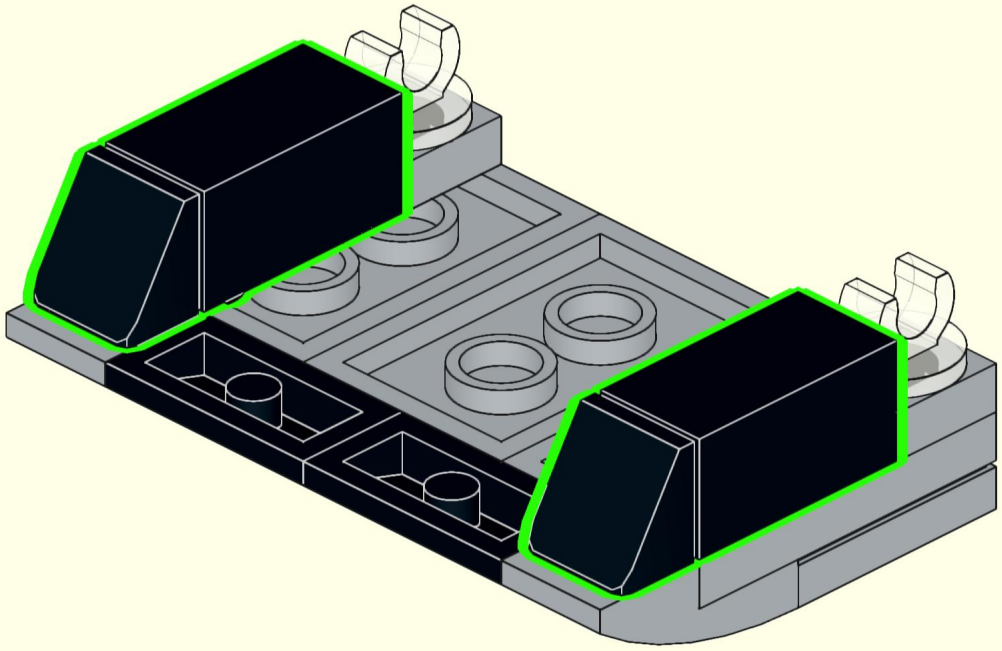

122

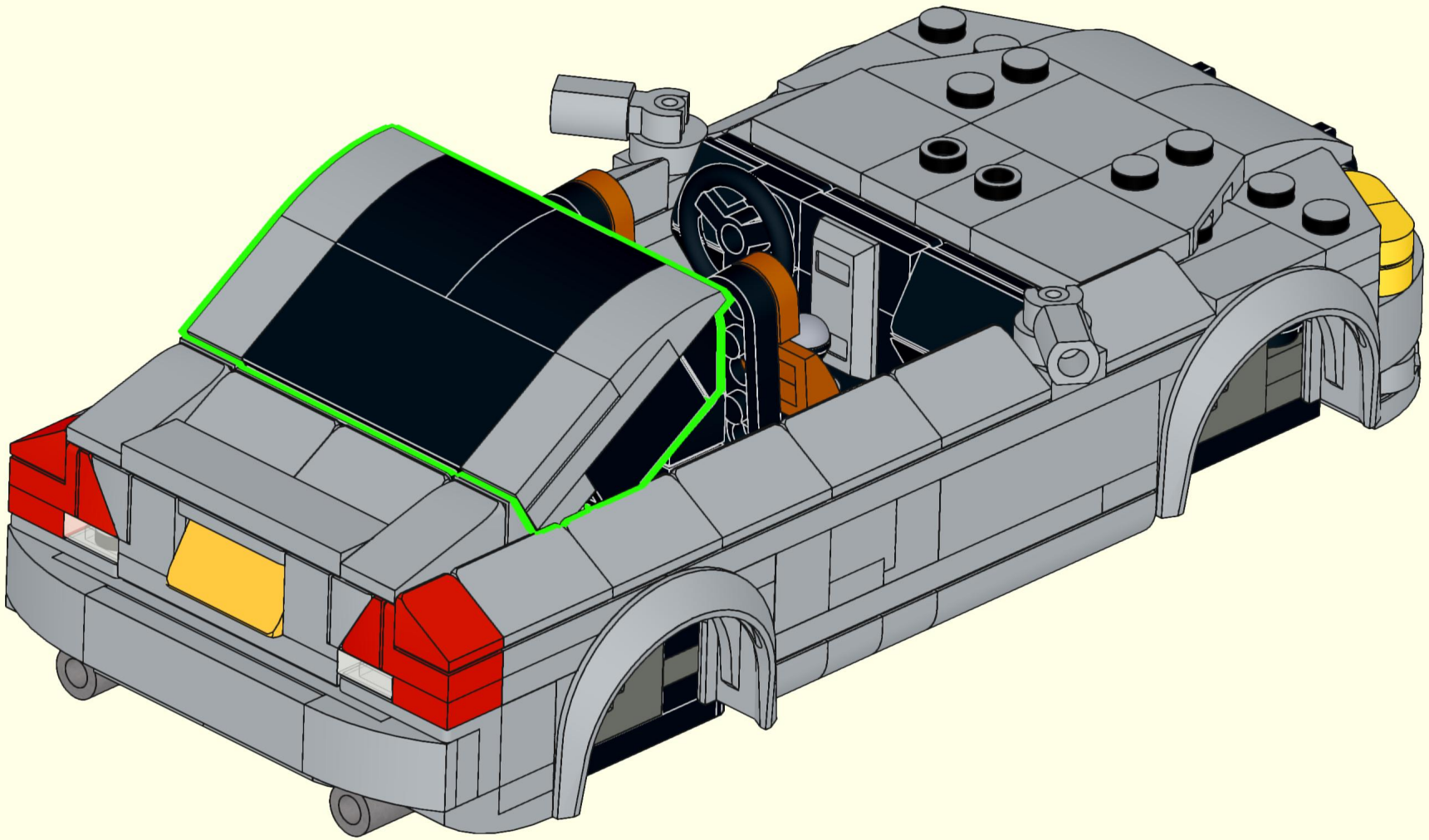

123

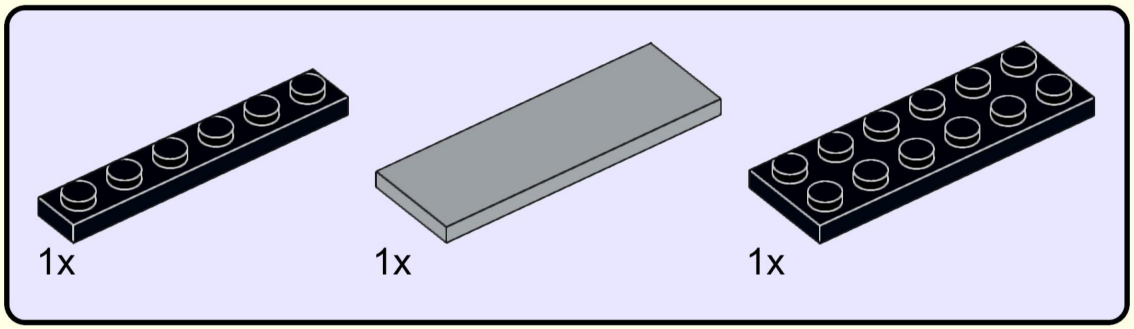

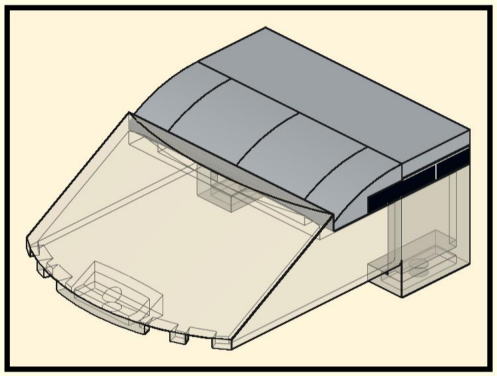

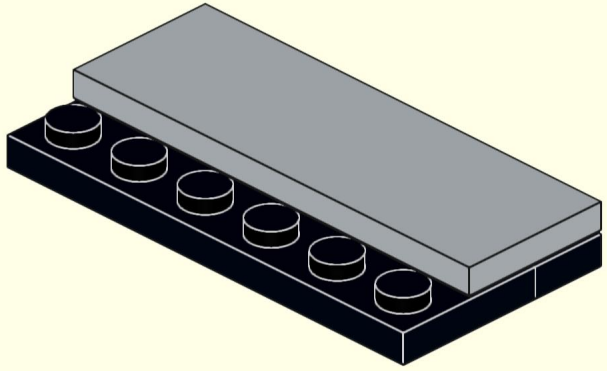

124

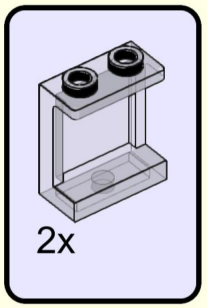

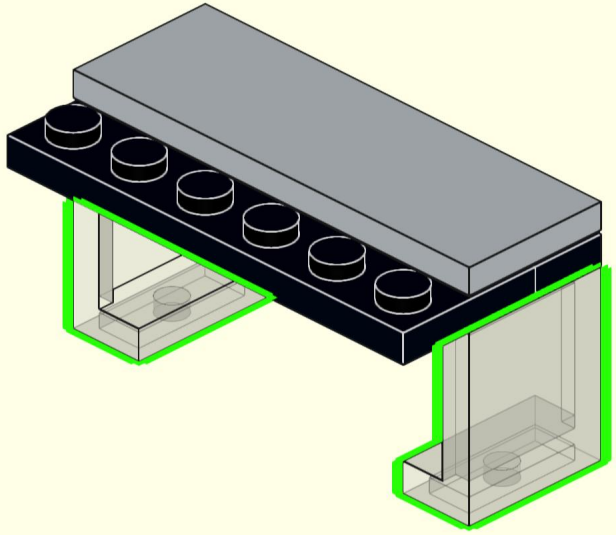

125

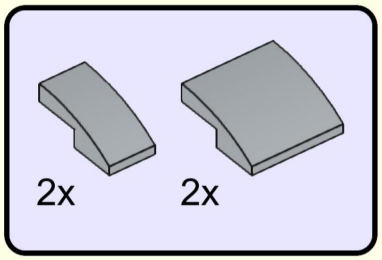

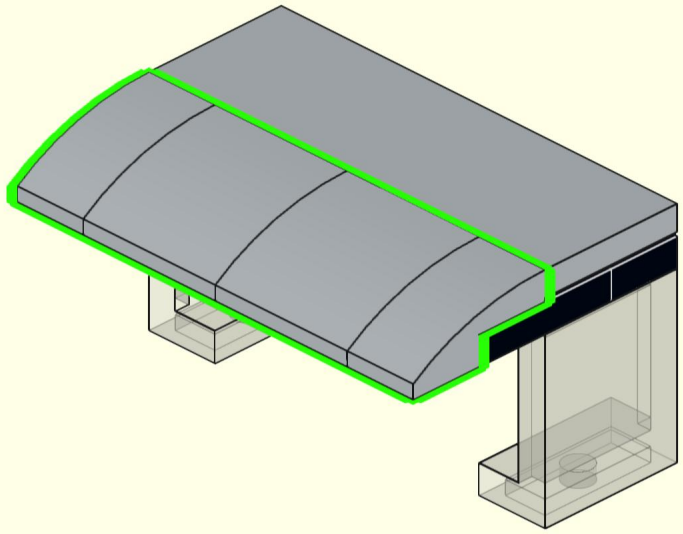

126

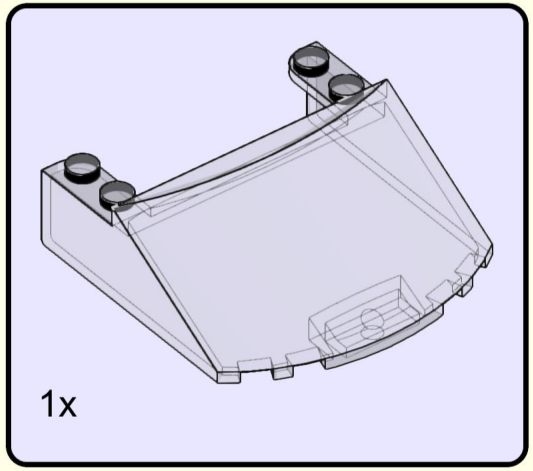

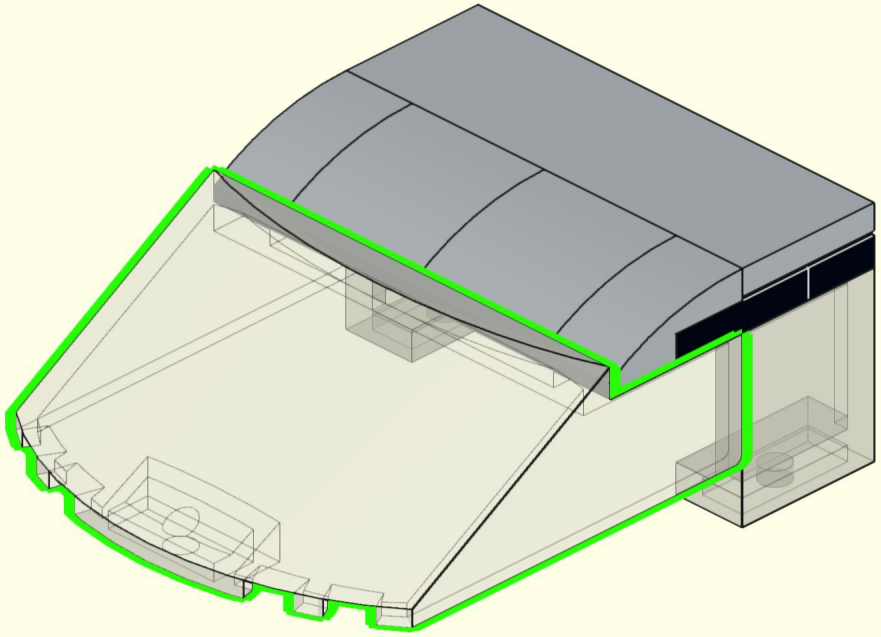

127

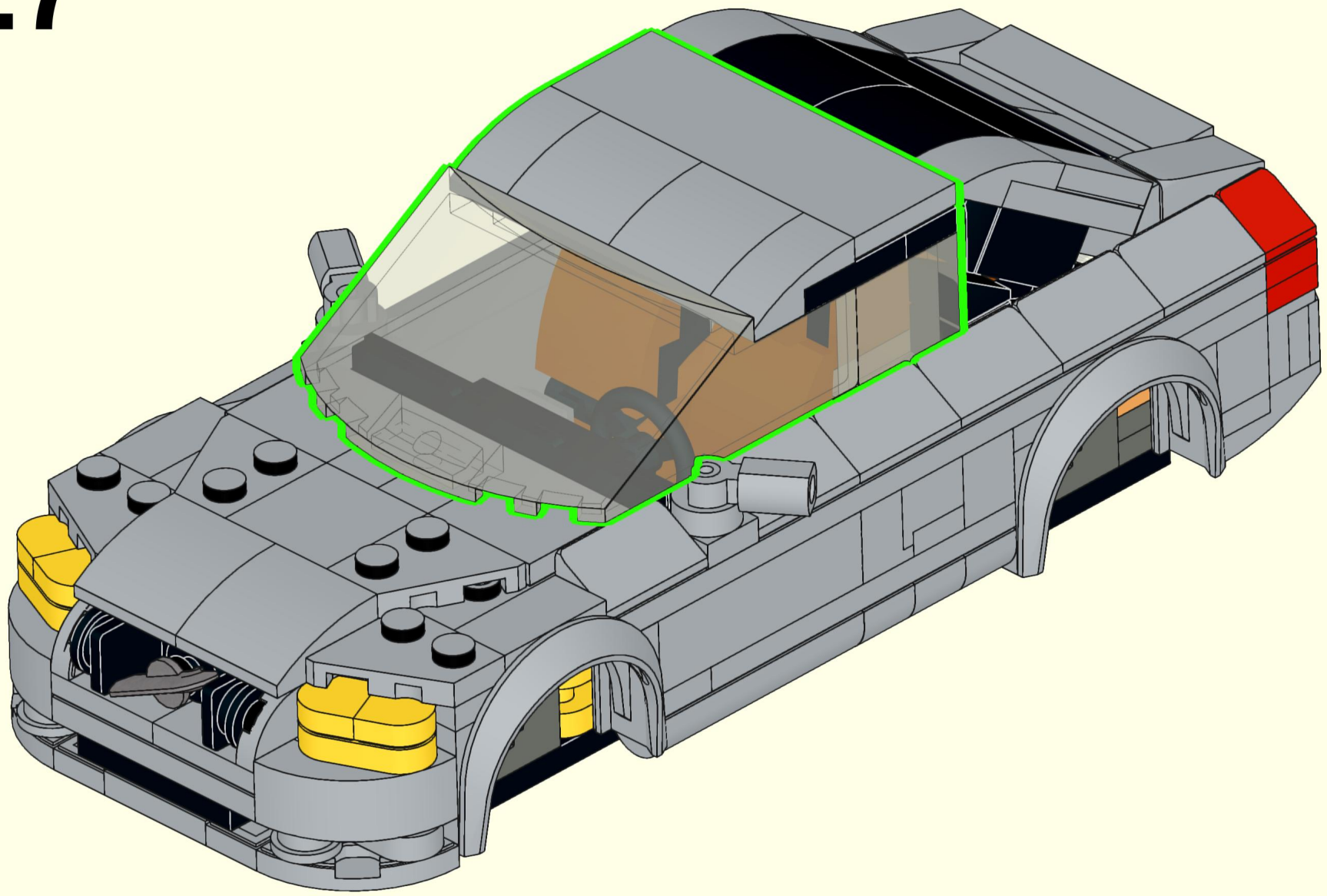

128

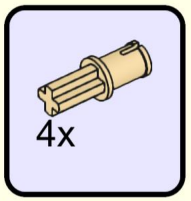

129

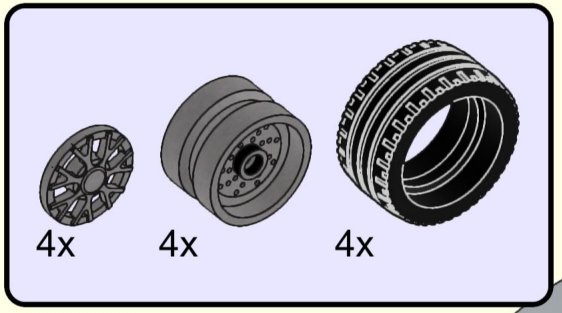

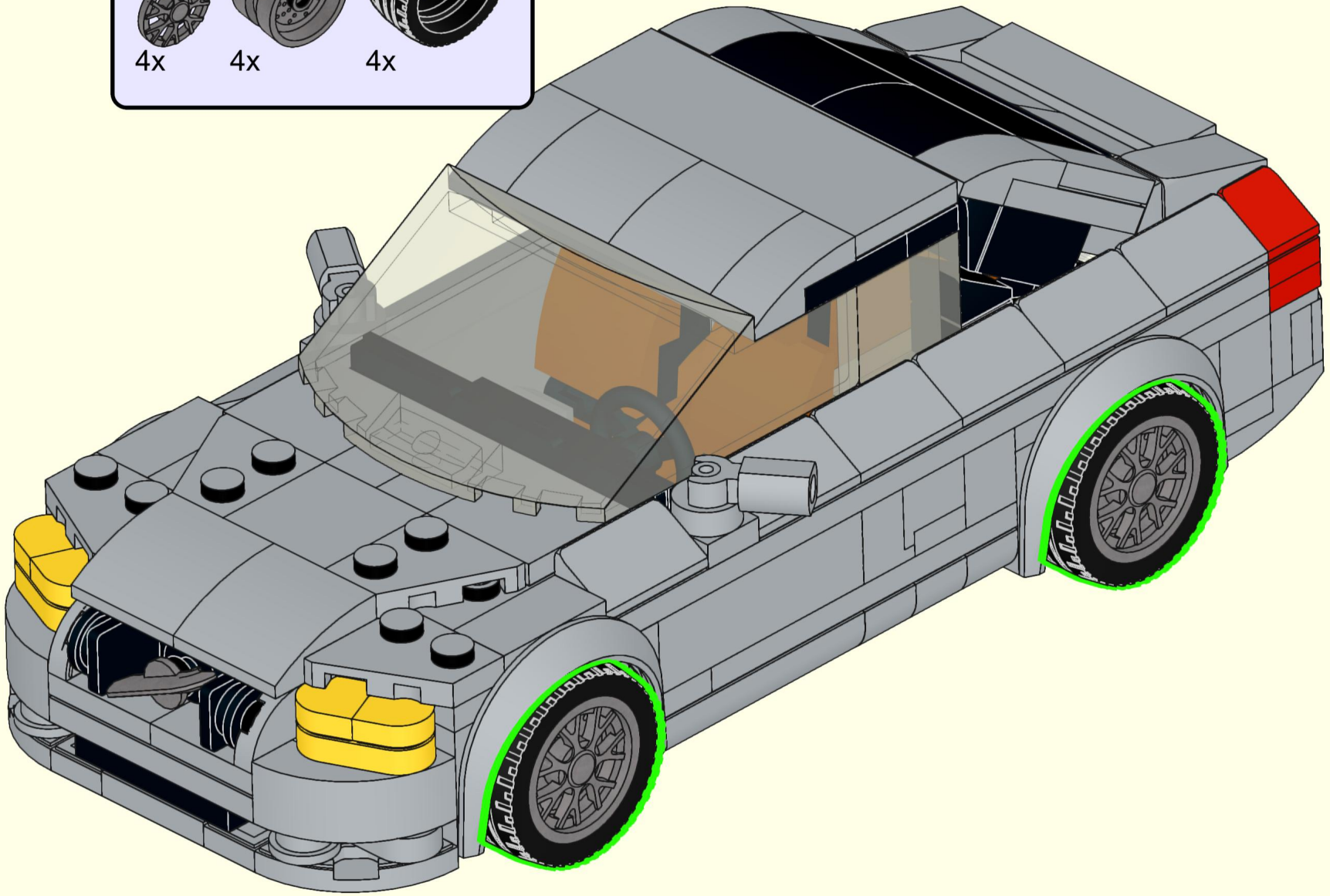



2x
3070
Black



2x
4073
Black



3x
3024
Black



1x
20482
Black



5x
54200
Black



1x
90370pb05
Black

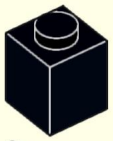

2x
3005
Black



2x
4085d
Black



2x
26047
Black



1x
35480
Black

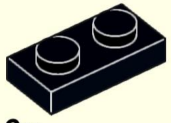

6x
3023
Black

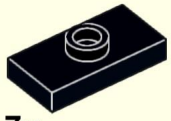

7x
15573
Black



4x
32828
Black

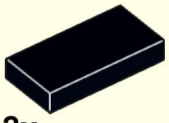

2x
3069
Black

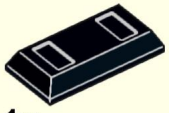

1x
99563
Black

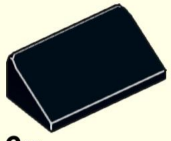

6x
85984
Black

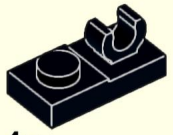

4x
44861
Black

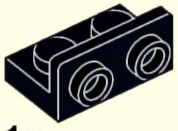

1x
99780
Black



2x
73825
Black



2x
32952
Black

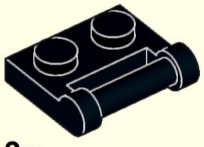

3x
48336
Black



2x
6091
Black



1x
30663
Black

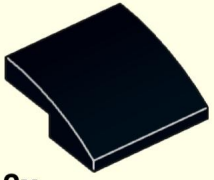

2x
15068
Black

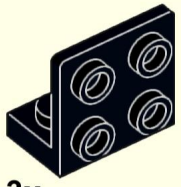

3x
99207
Black

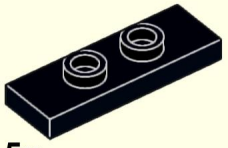

5x
34103
Black

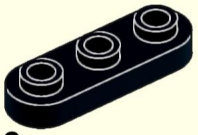

2x
77850
Black

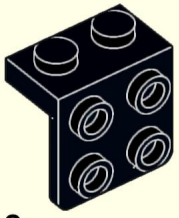

2x
44728
Black

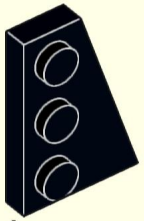

1x
43722
Black



1x
43723
Black

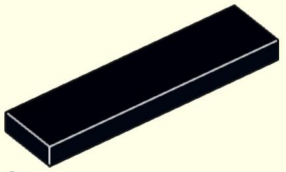

2x
2431
Black

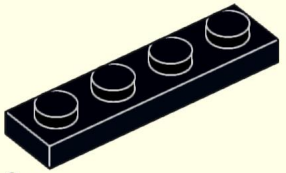

2x
3710
Black

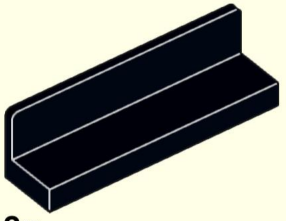

2x
30413
Black

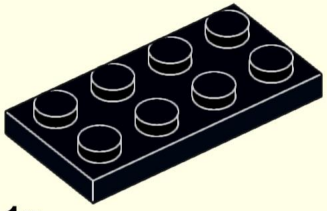

1x
3020
Black

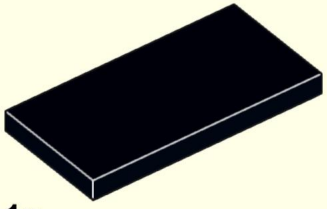

1x
87079
Black

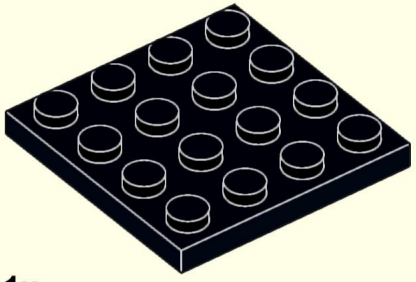

1x
3031
Black

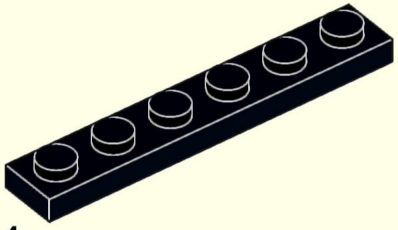

4x
3666
Black

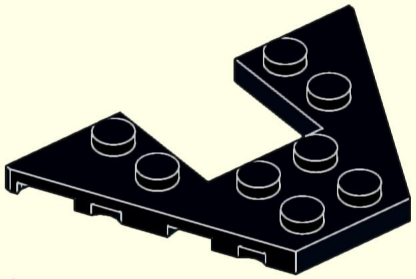

1x
47407
Black

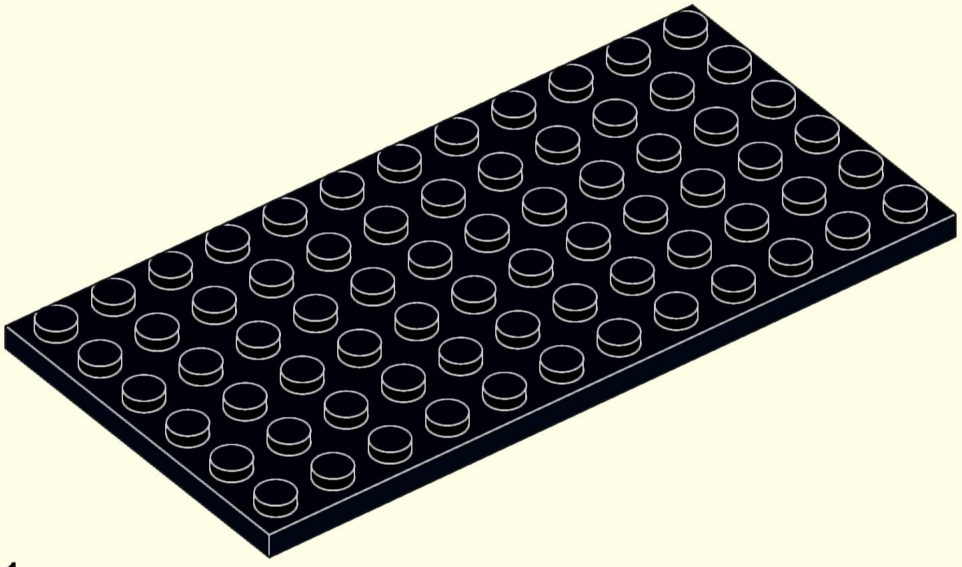

1x
3028
Black

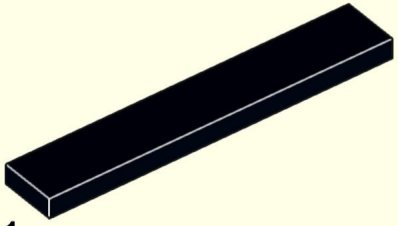

1x
6636
Black

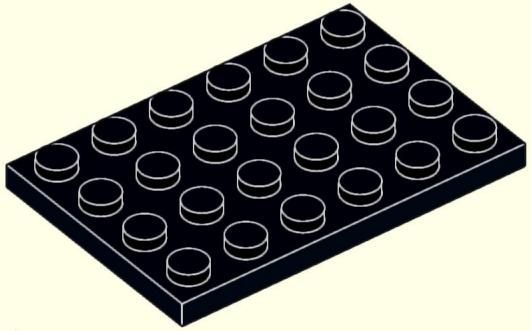

1x
3032
Black

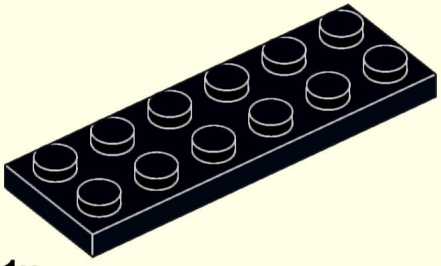

1x
3795
Black

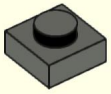

8x
3024
Dark Bluish Gray



1x
4073
Dark Bluish Gray

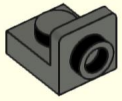

3x
36840
Dark Bluish Gray



2x
35480
Dark Bluish Gray

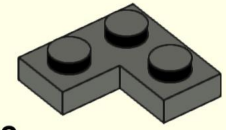

2x
2420
Dark Bluish Gray

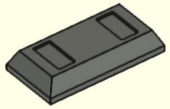

1x
99563
Dark Bluish Gray

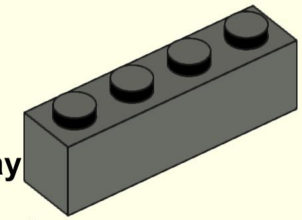

1x
3010
Dark Bluish Gray

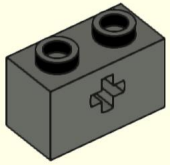

4x
32064
Dark Bluish Gray

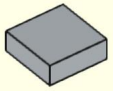

2x
3070
Light Bluish Gray

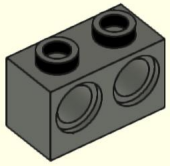

1x
32000
Dark Bluish Gray



4x
25269
Light Bluish Gray

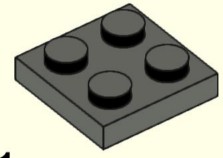

1x
3022
Dark Bluish Gray



2x
4073
Light Bluish Gray

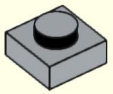

12x
3024
Light Bluish Gray



1x
85861
Light Bluish Gray



2x
20482
Light Bluish Gray

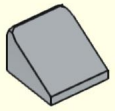

4x
54200
Light Bluish Gray

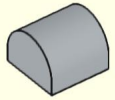

6x
49307
Light Bluish Gray

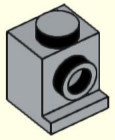

6x
4070
Light Bluish Gray



2x
11090
Light Bluish Gray

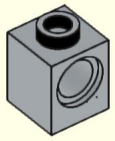

2x
6541
Light Bluish Gray

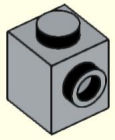

2x
87087
Light Bluish Gray

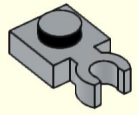

2x
4085d
Light Bluish Gray

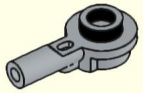

1x
32828
Light Bluish Gray

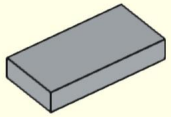

6x
3069
Light Bluish Gray

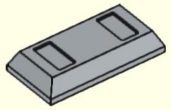

1x
99563
Light Bluish Gray

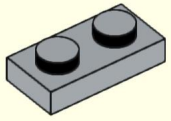

2x
3023
Light Bluish Gray

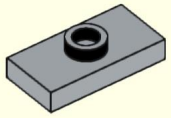

2x
15573
Light Bluish Gray

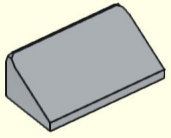

14x
85984
Light Bluish Gray

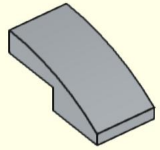

8x
11477
Light Bluish Gray

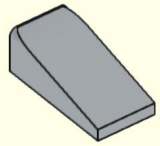

2x
5404
Light Bluish Gray

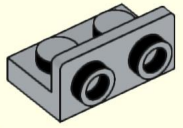

3x
99780
Light Bluish Gray

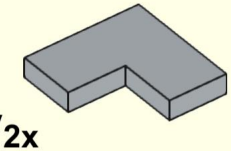

2x
14719
Light Bluish Gray

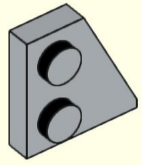

2x
24307
Light Bluish Gray

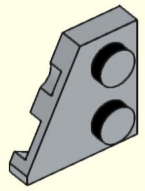

2x
24299
Light Bluish Gray

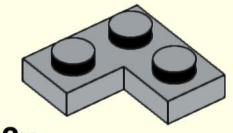

2x
2420
Light Bluish Gray

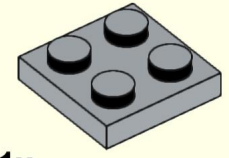

1x
3022
Light Bluish Gray

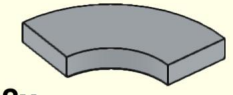

2x
27925
Light Bluish Gray

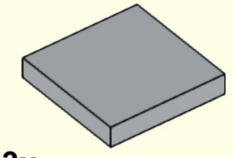

3x
3068
Light Bluish Gray

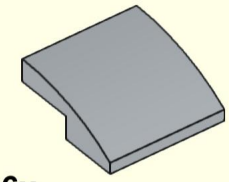

6x
15068
Light Bluish Gray

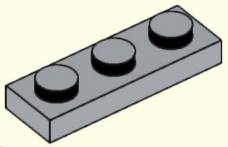

2x
3623
Light Bluish Gray

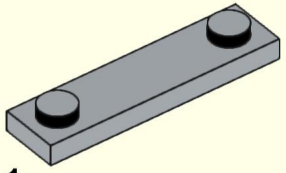

1x
41740
Light Bluish Gray

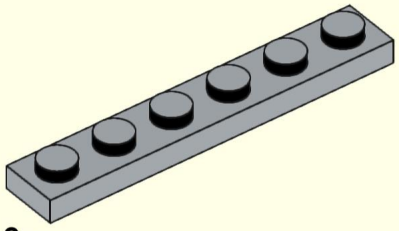

3x
3666
Light Bluish Gray

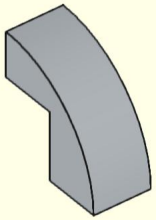

2x
5907
Light Bluish Gray

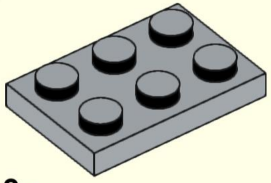

3x
3021
Light Bluish Gray

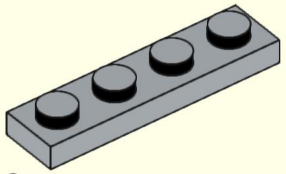

2x
3710
Light Bluish Gray

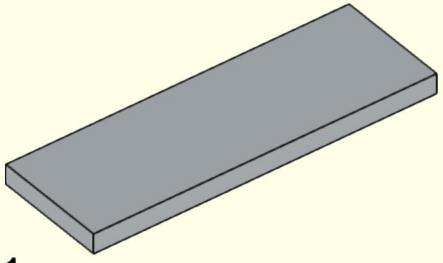

1x
69729
Light Bluish Gray

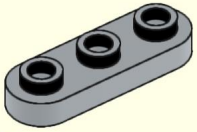

2x
77850
Light Bluish Gray

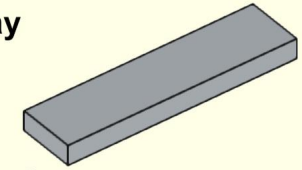

2x
2431
Light Bluish Gray

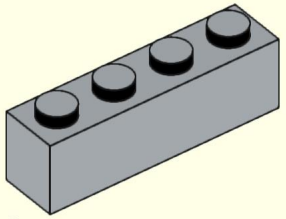

2x
3010
Light Bluish Gray

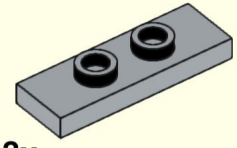

2x
34103
Light Bluish Gray

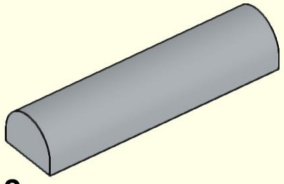

2x
79756
Light Bluish Gray

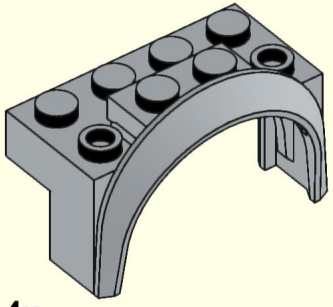

4x
3387
Light Bluish Gray

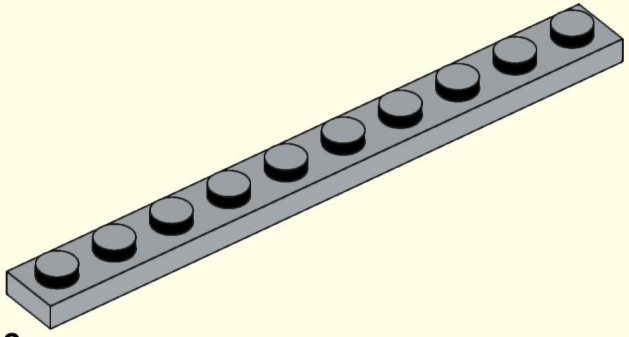

2x
4477
Light Bluish Gray

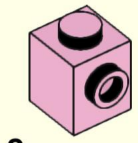

2x
87087
Bright Pink

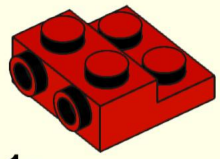

1x
99206
Red

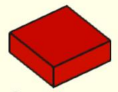

2x
3070
Red

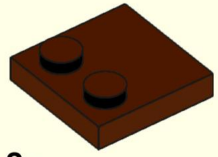

2x
33909
Reddish Brown

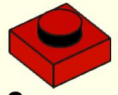

2x
3024
Red



2x
24246
Dark Orange



4x
54200
Red

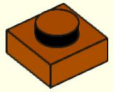

1x
3024
Dark Orange



2x
36840
Red



1x
54200
Dark Orange

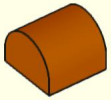

2x
49307
Dark Orange

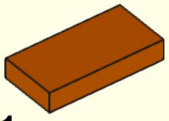

1x
3069
Dark Orange

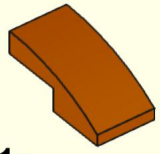

1x
11477
Dark Orange

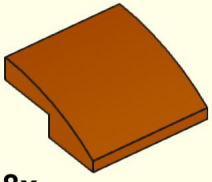

8x
15068
Dark Orange

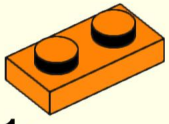

1x
3023
Orange

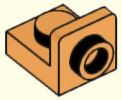

2x
36840
Medium Nougat



6x
35480
Dark Tan

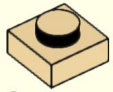

2x
3024
Tan

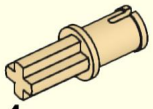

4x
3749
Tan

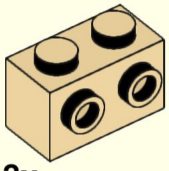

2x
11211
Tan

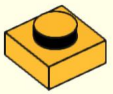

2x
3024
Bright Light Orange

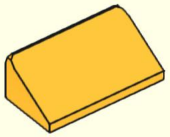

1x
85984
Bright Light Orange

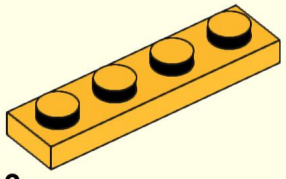

3x
3710
Bright Light Orange



4x
24246
Yellow



2x
35480
Yellow

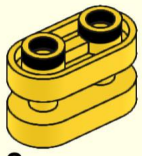

2x
77808
Yellow

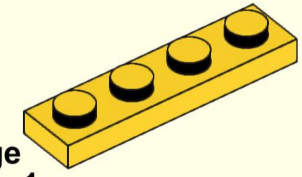

1x
3710
Yellow



4x
85861
Lime

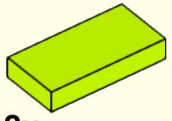

2x
3069
Lime

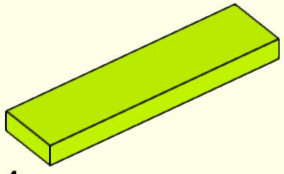

1x
2431
Lime



4x
20482
Yellowish Green

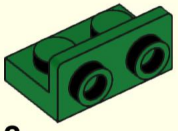

2x
99780
Green

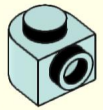

6x
3386
Light Aqua

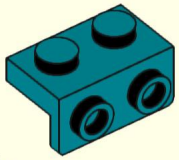

2x
99781
Dark Turquoise

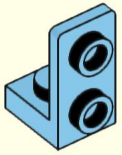

2x
73825
Bright Light Blue

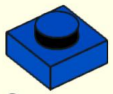

2x
3024
Blue

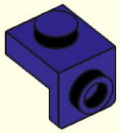

2x
36841
Dark Purple

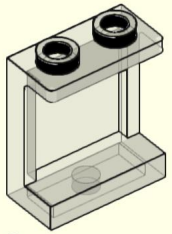

2x
87552
Trans-Black

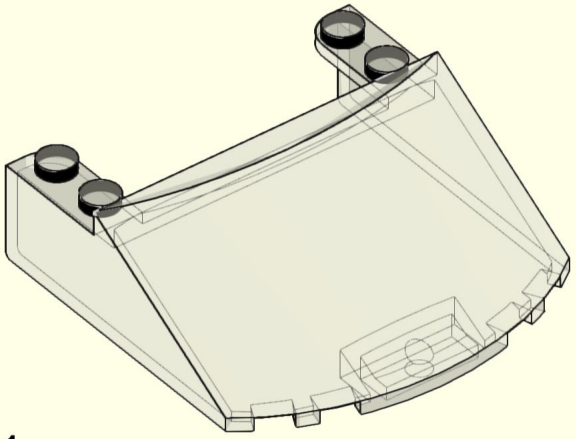

1x
65632
Trans-Black

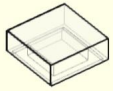

2x
3070
Trans-Clear



2x
5264
Trans-Clear



1x
93555
Flat Silver



2x
37762
Flat Silver



4x
18979b
Flat Silver

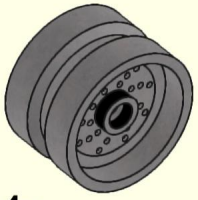

4x
66727
Flat Silver



4x
18977
Rubber Black