FORGOTTEN LANDS



2

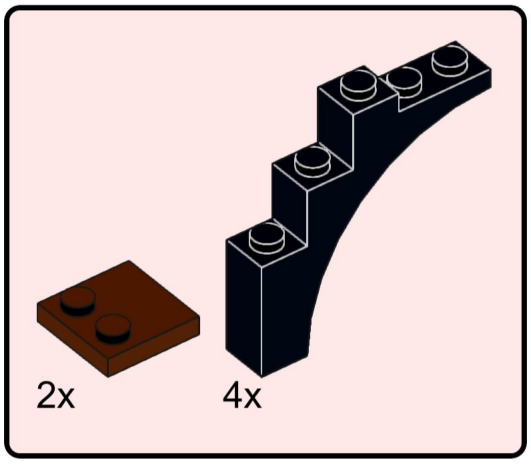

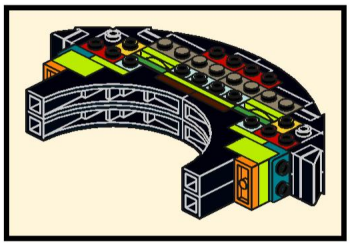

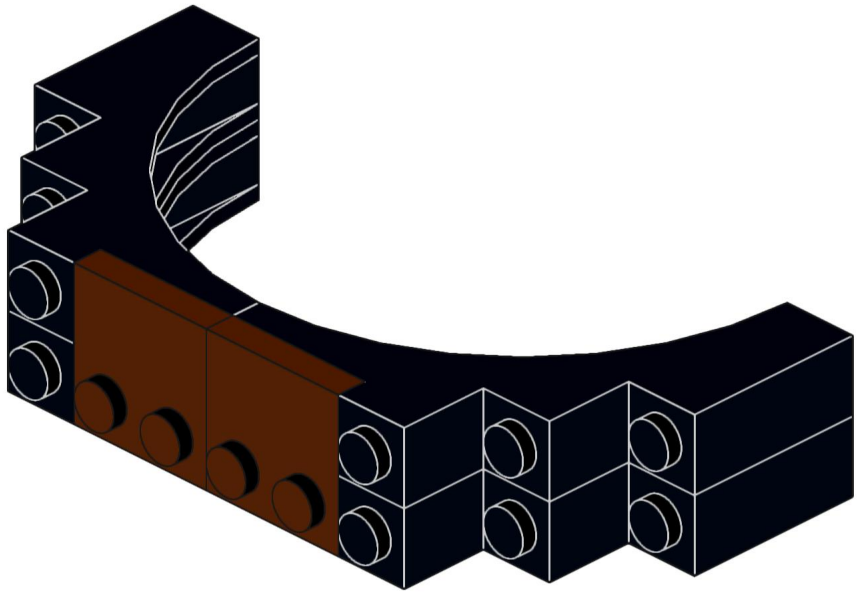

3

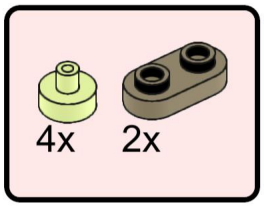

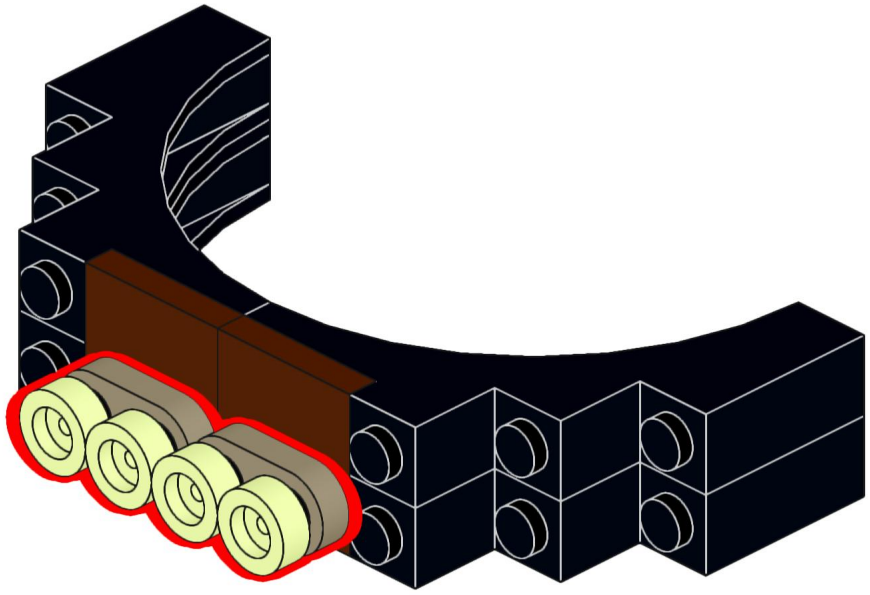

4

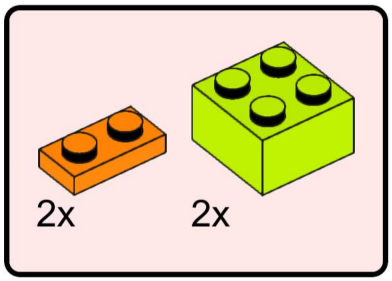

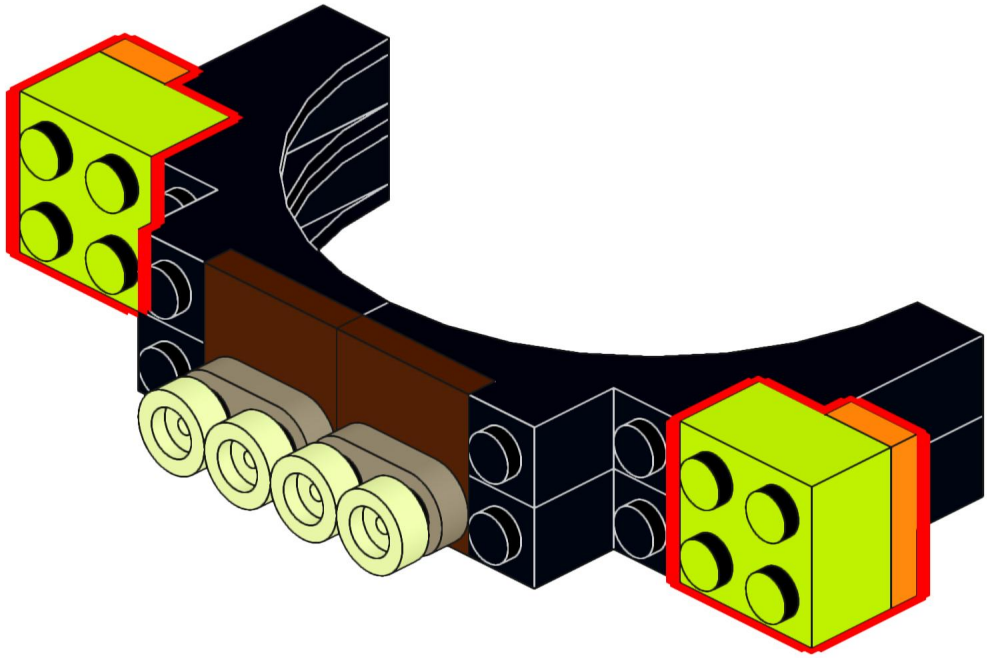

5

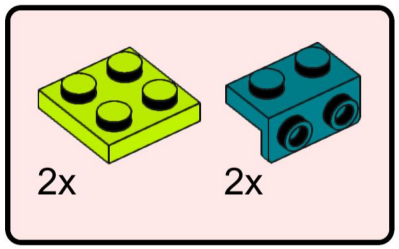

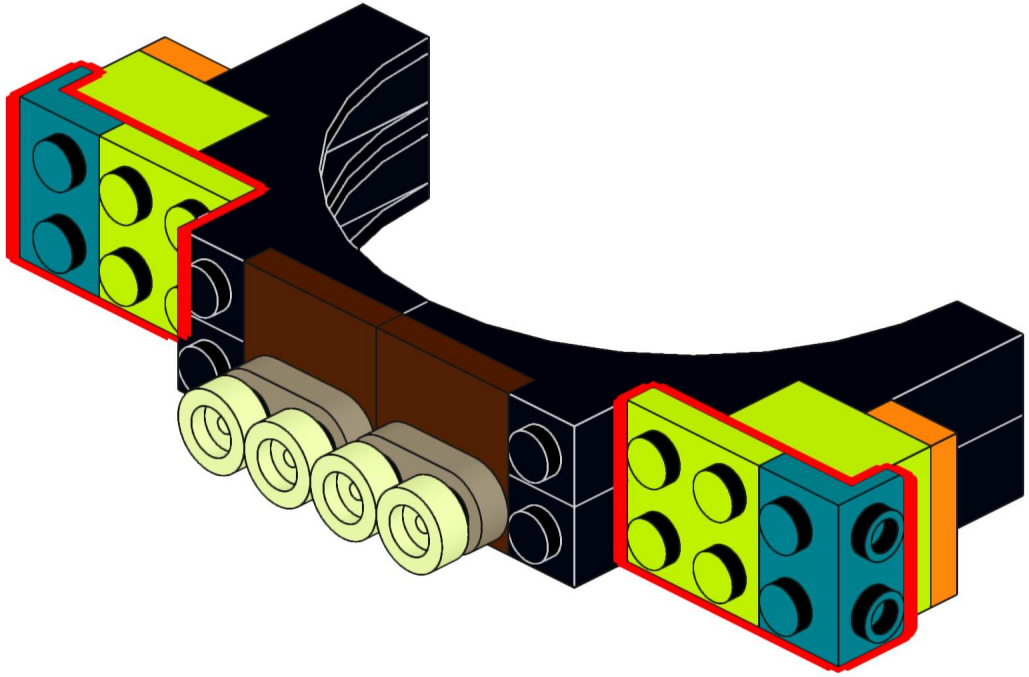

6

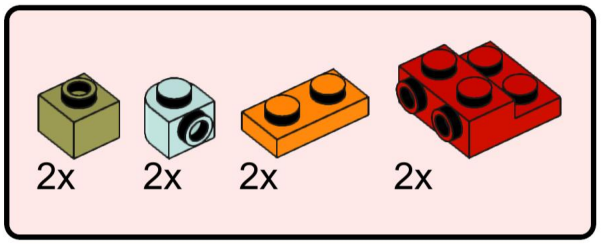

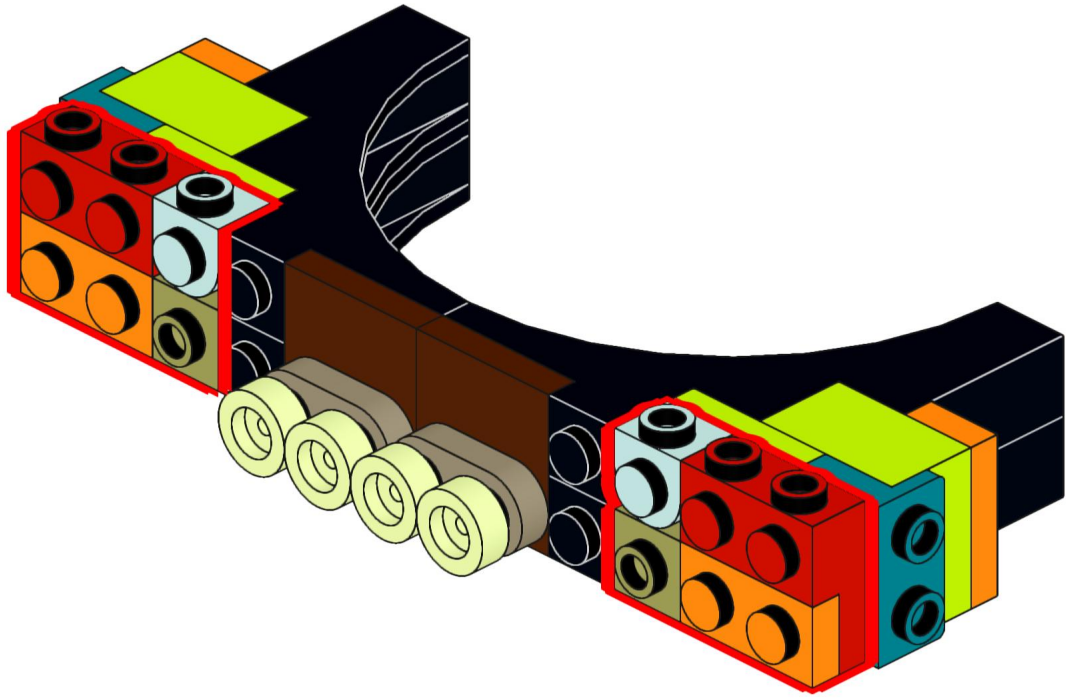

7

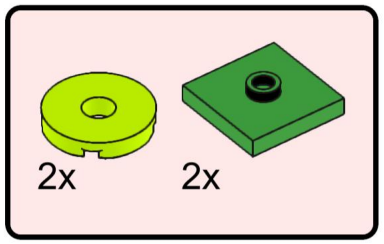

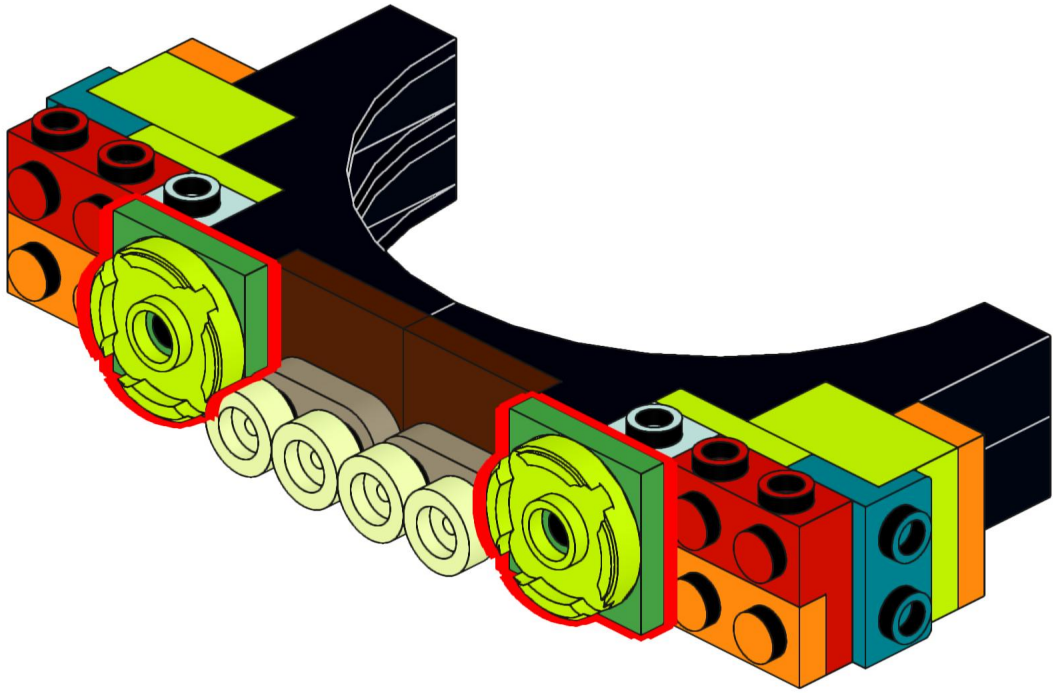

8

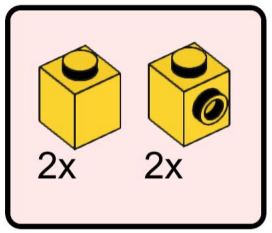

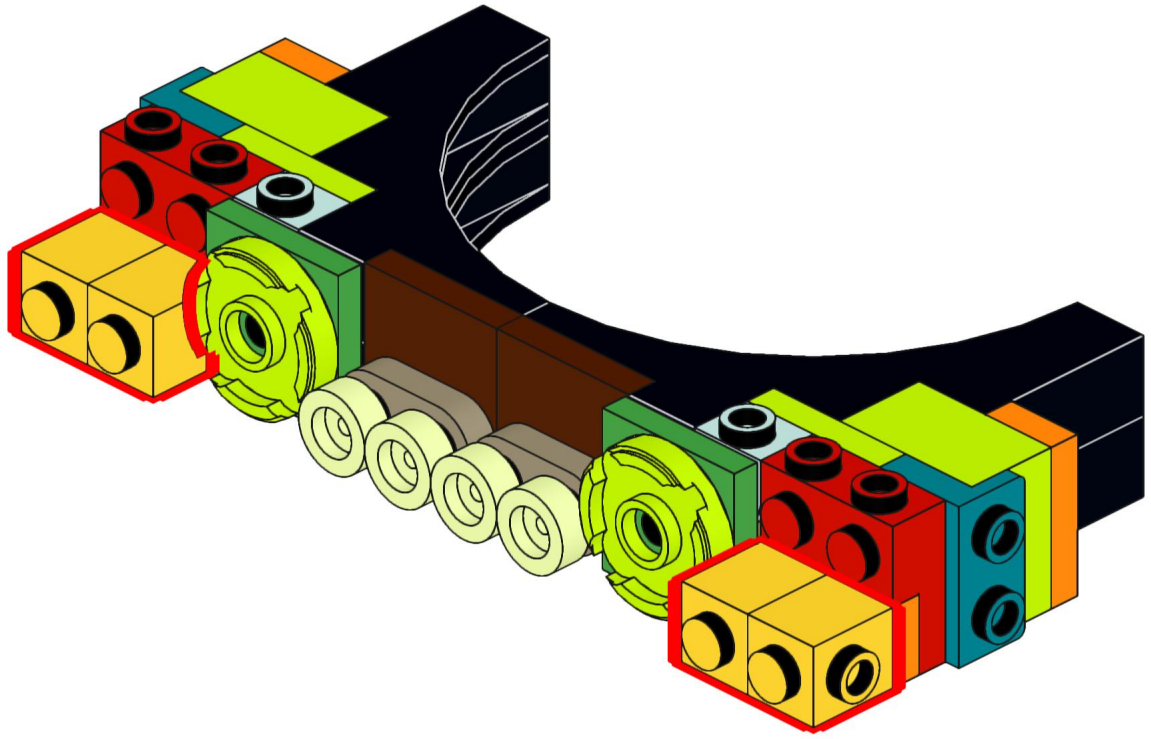

9

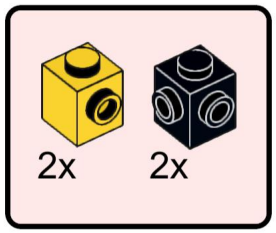

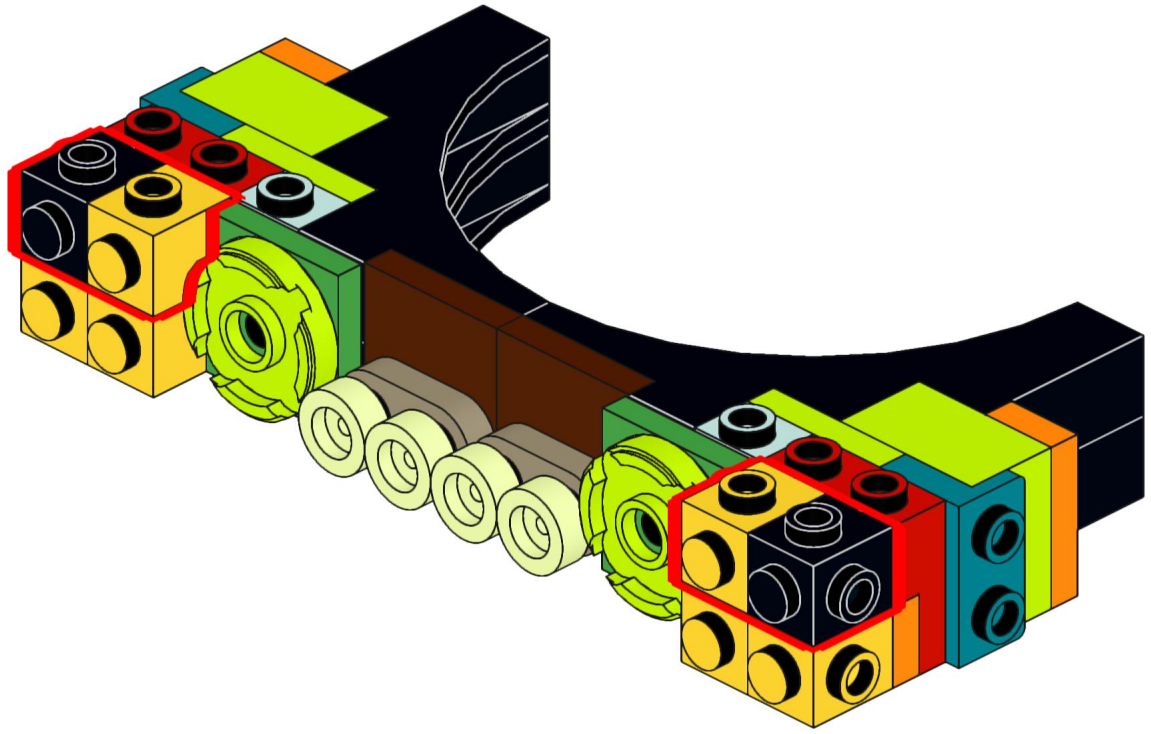

10

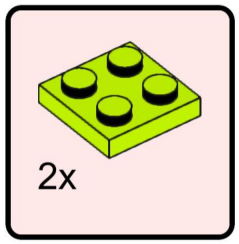

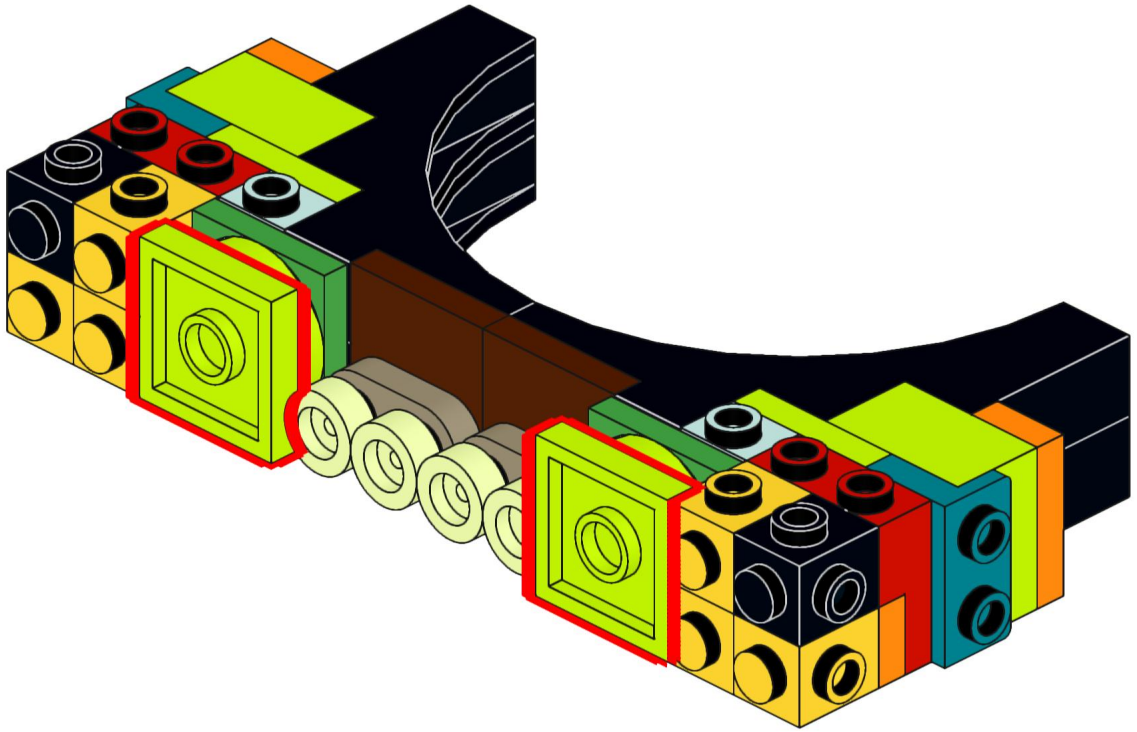

11

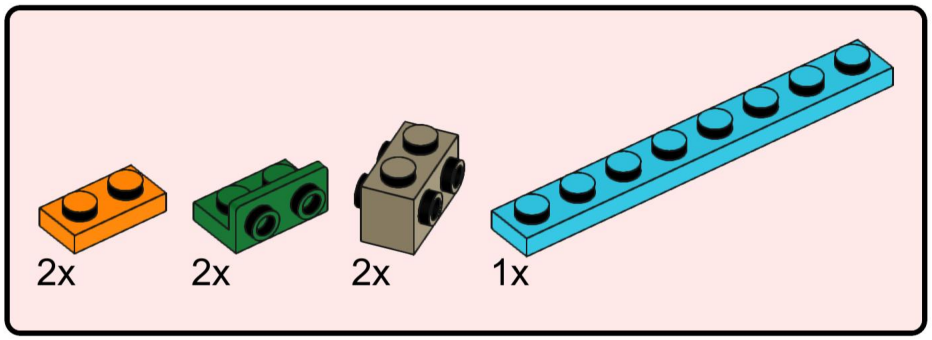

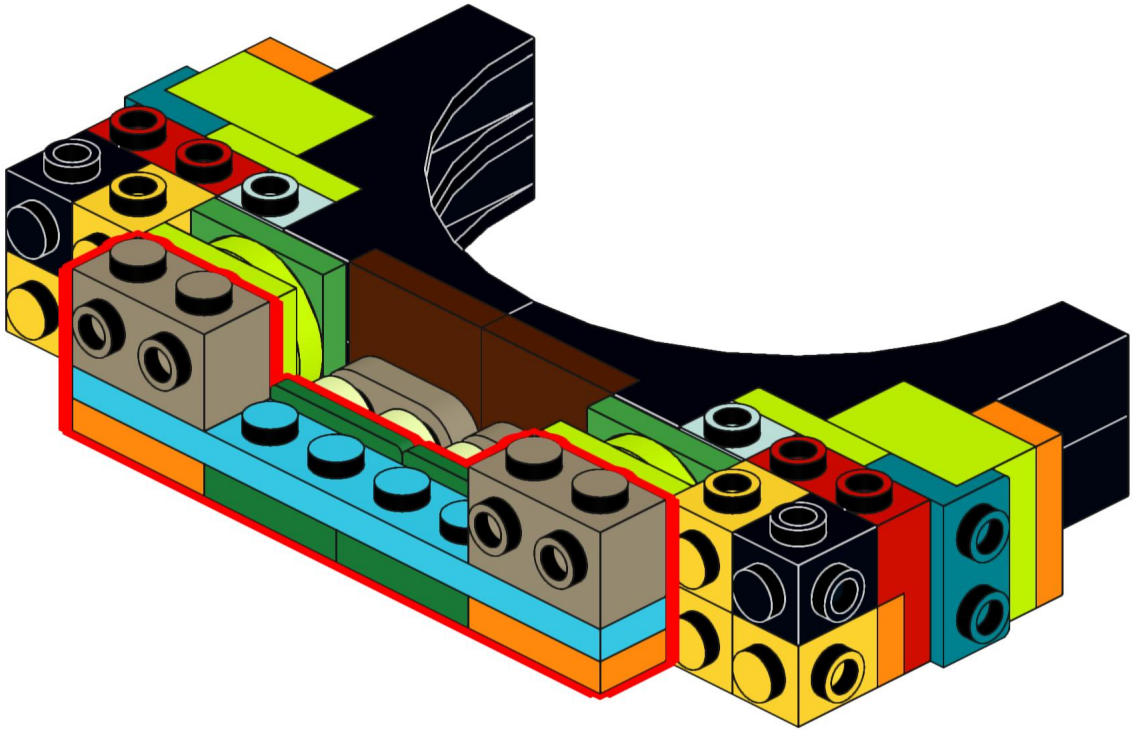

12

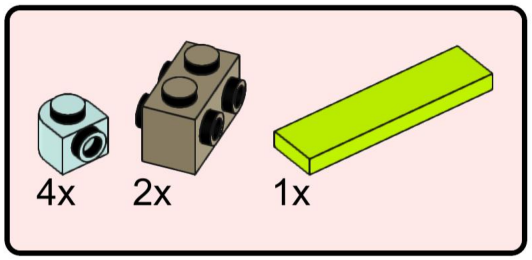

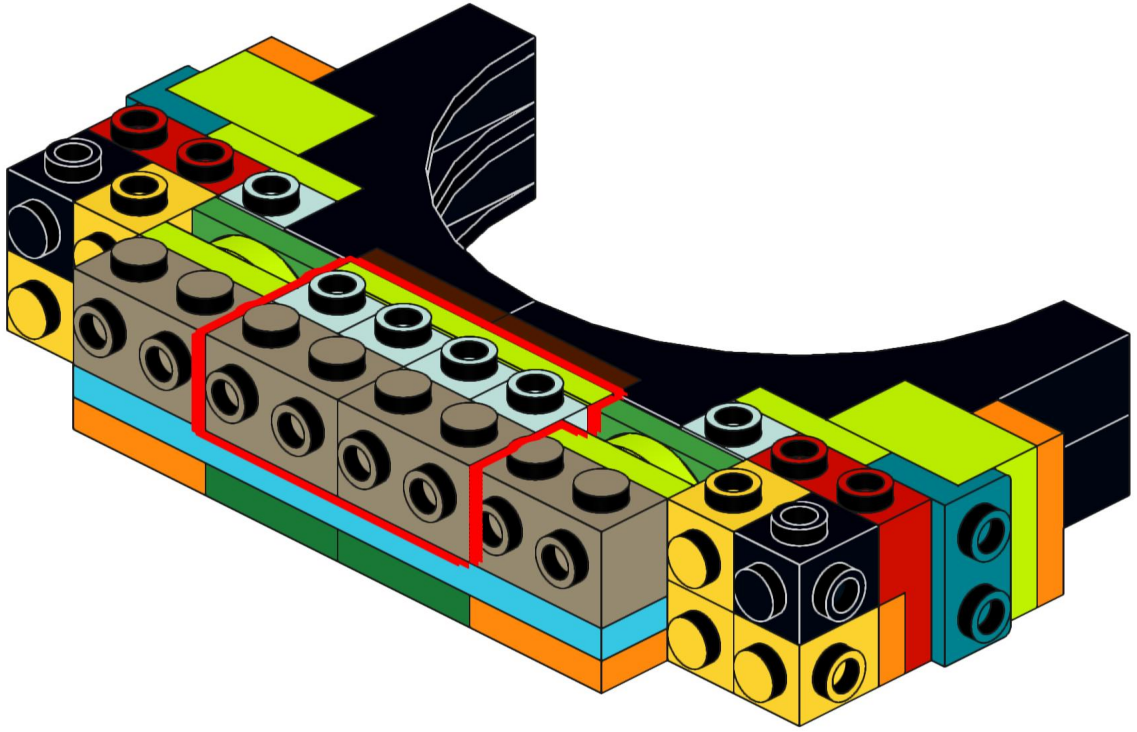

13

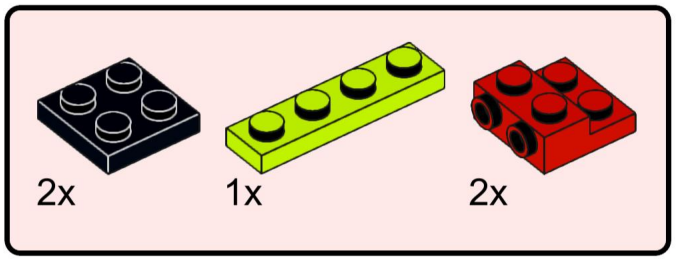

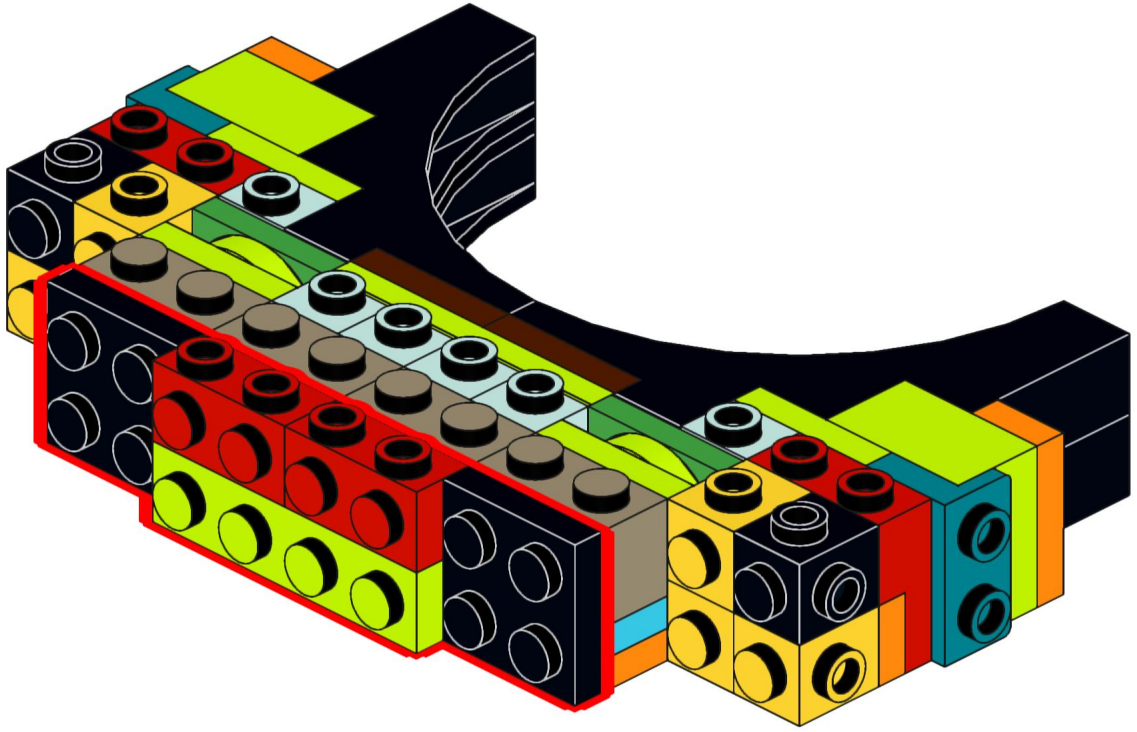

14

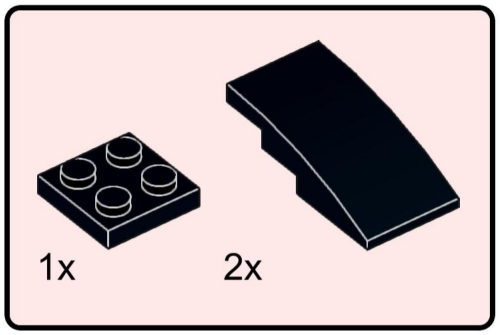

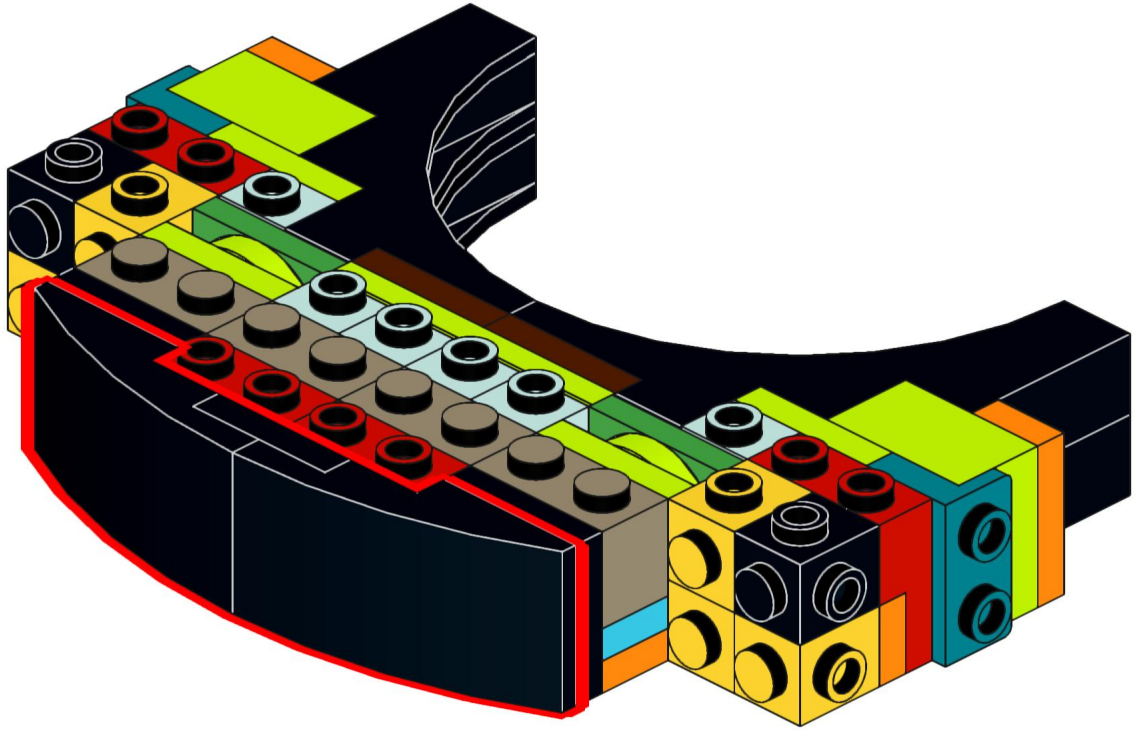

15

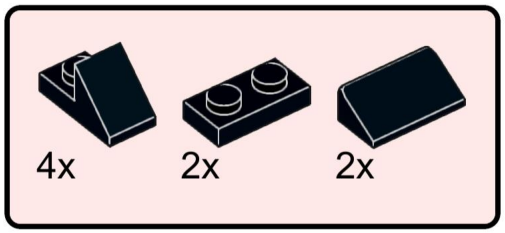

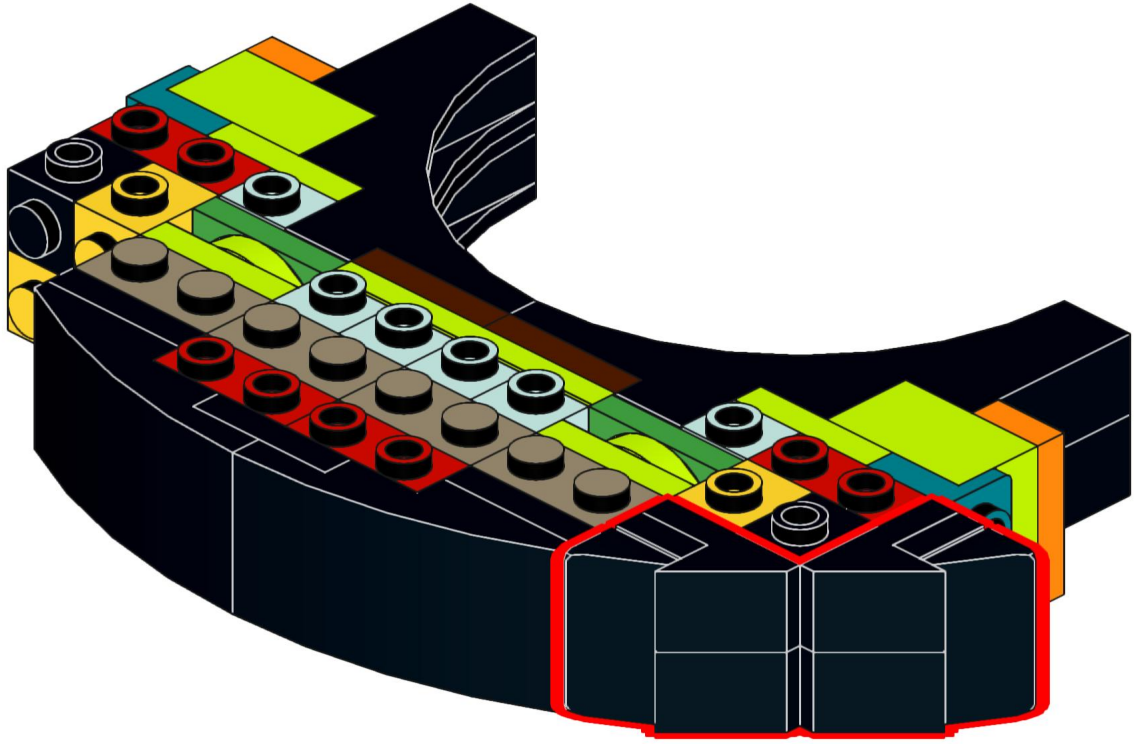

16

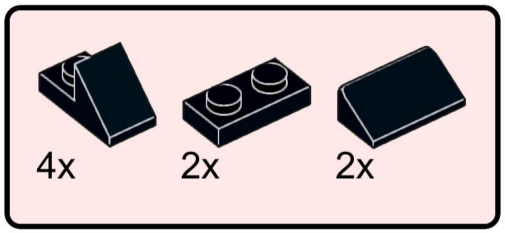

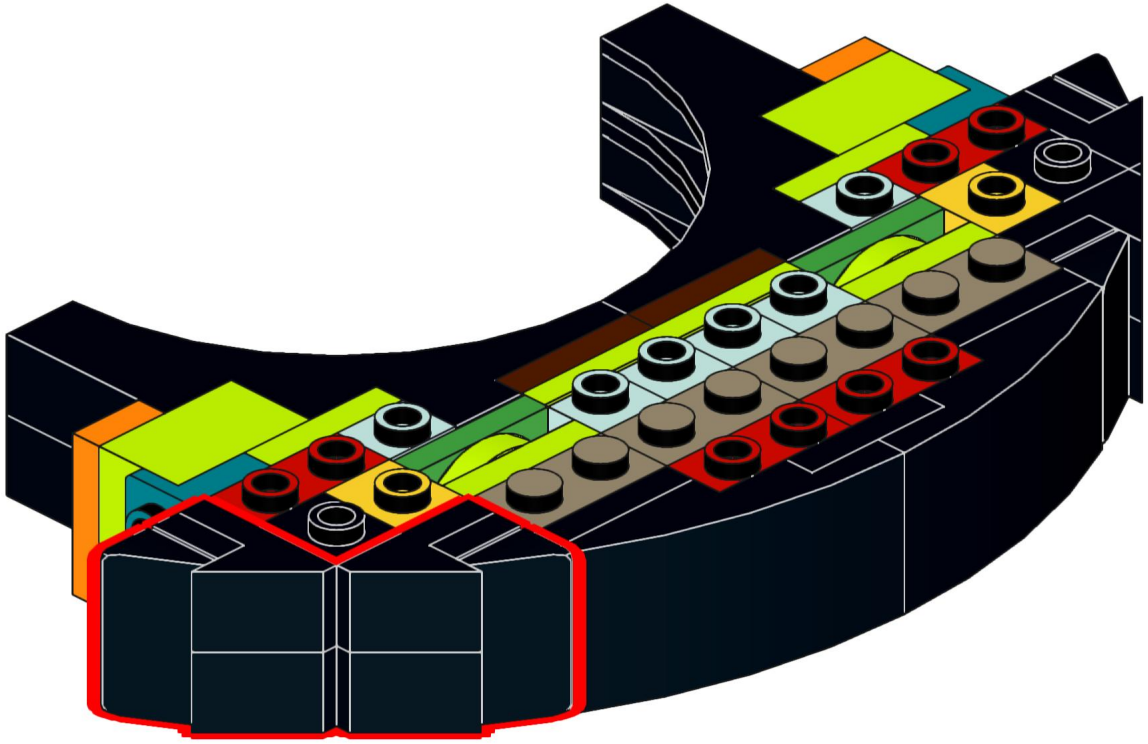

17

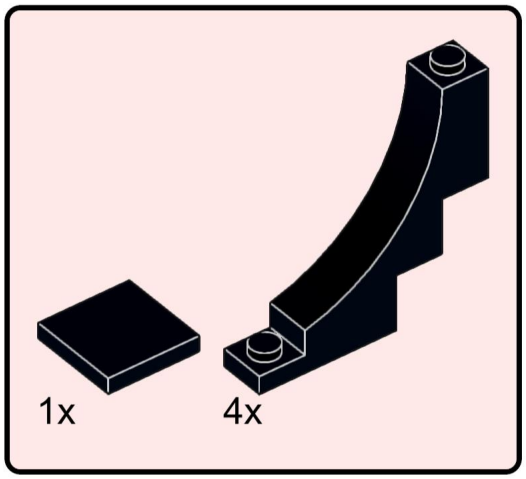

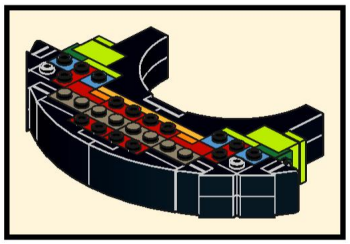

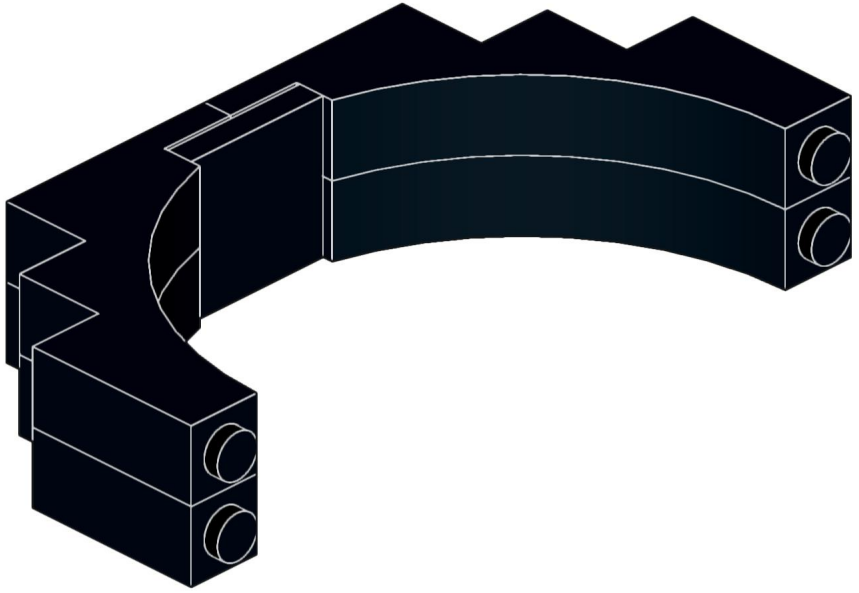

18

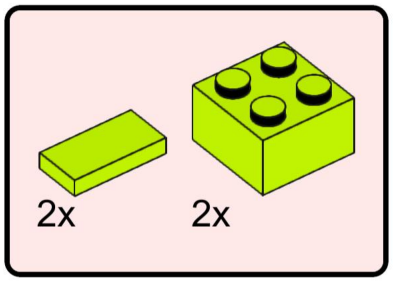

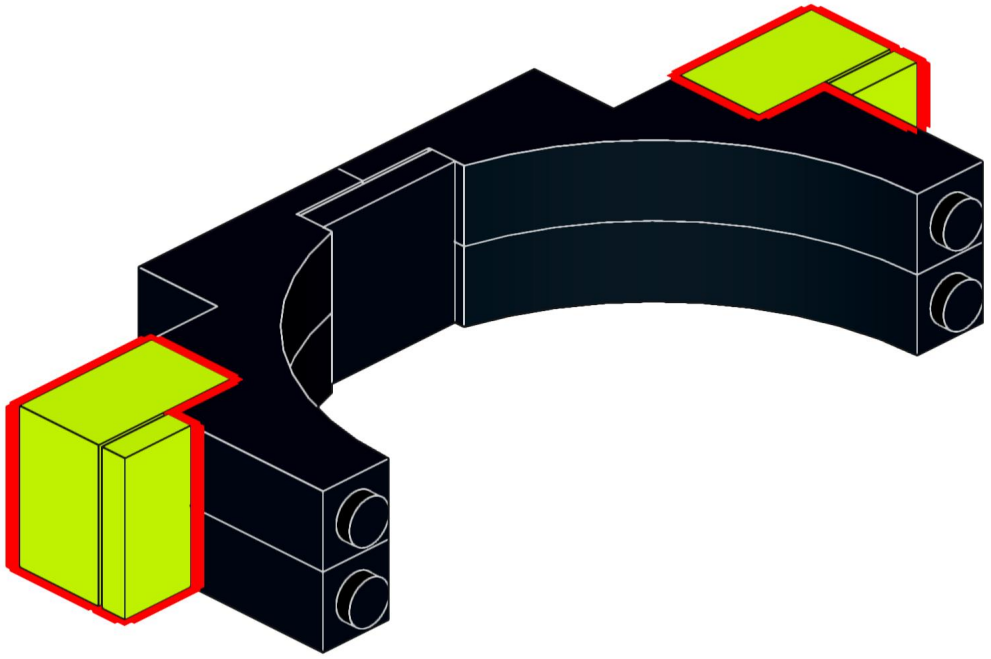

19

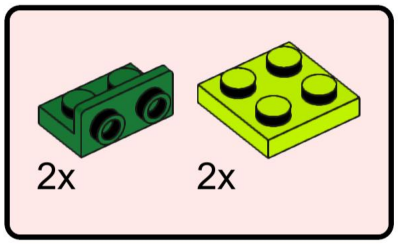

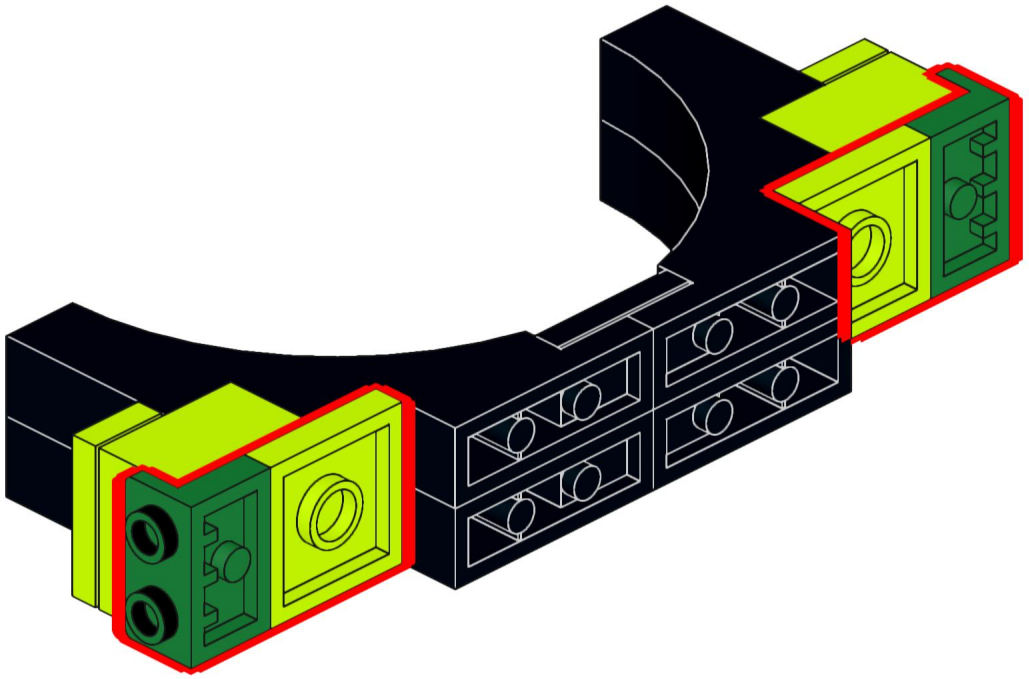

20

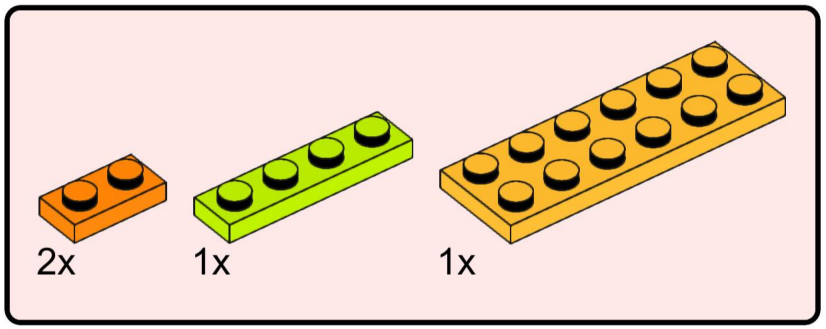

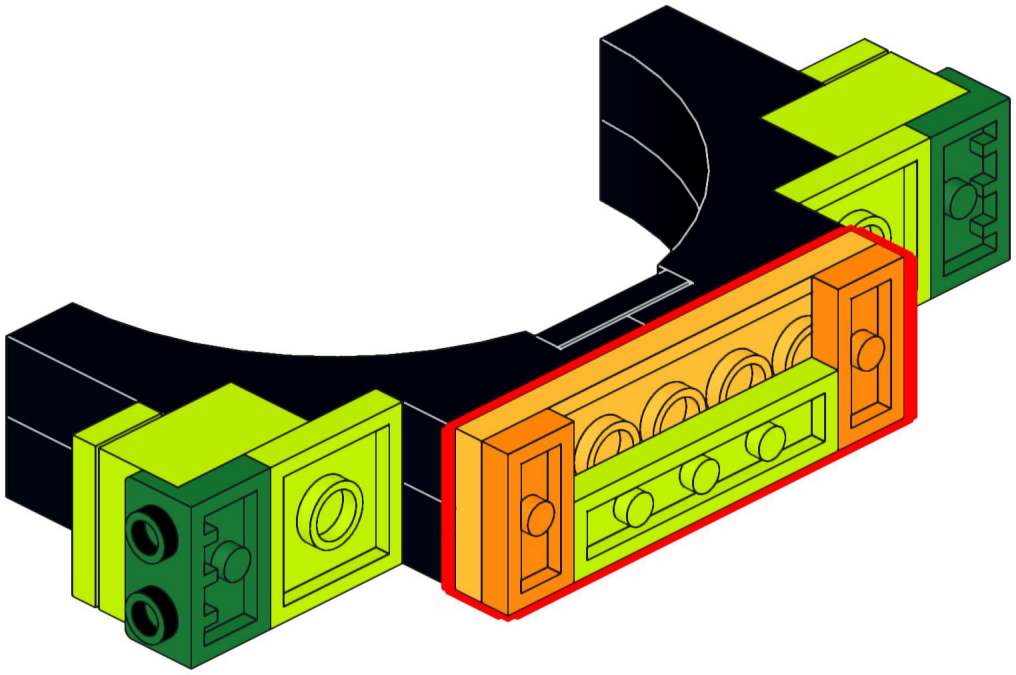

21

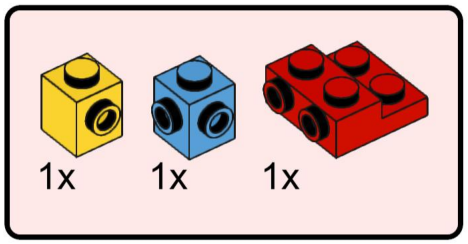

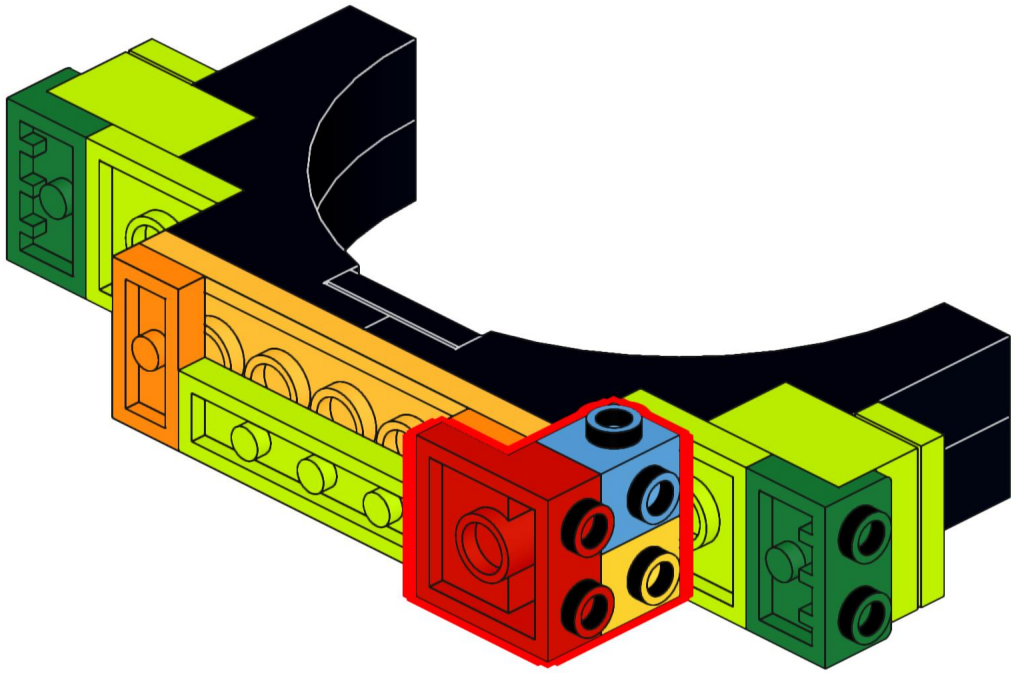

22

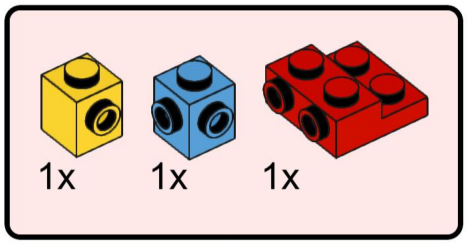

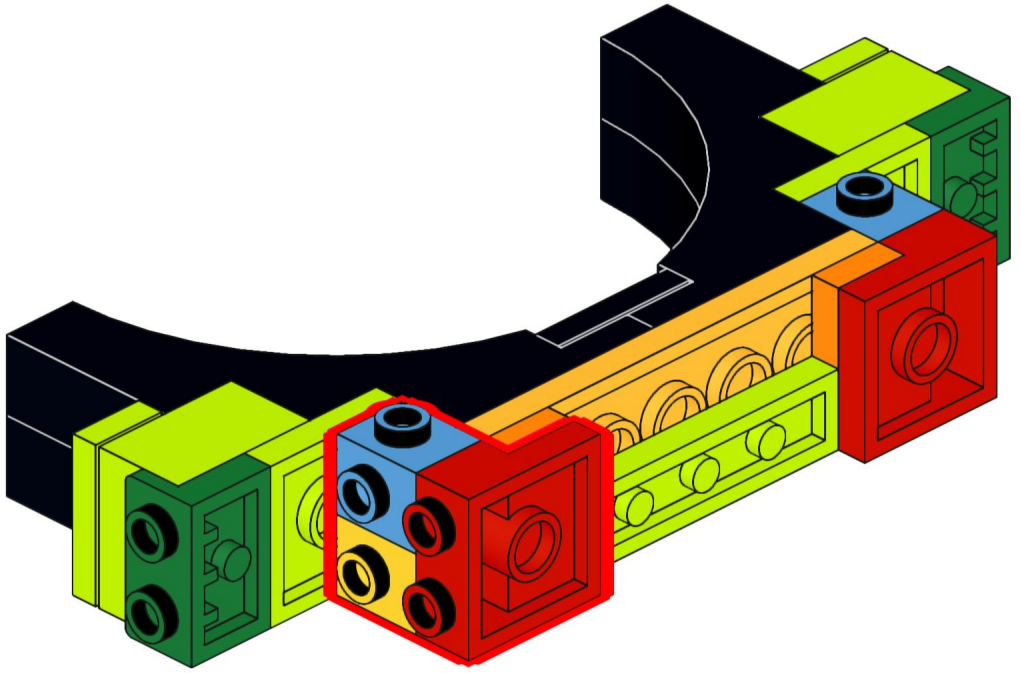

23

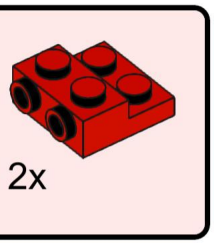

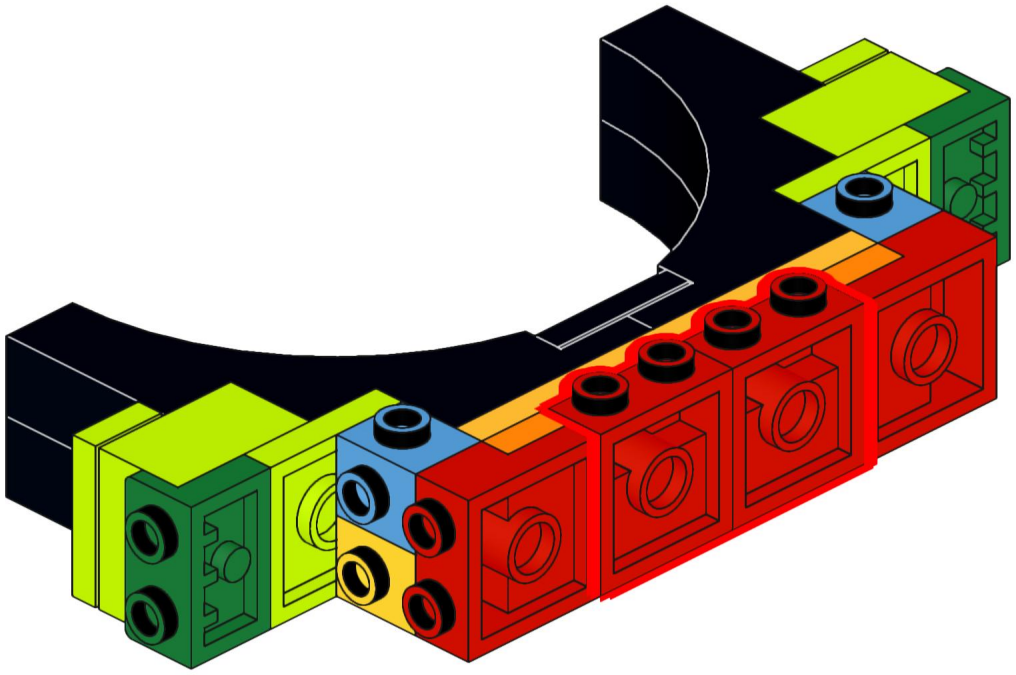

24

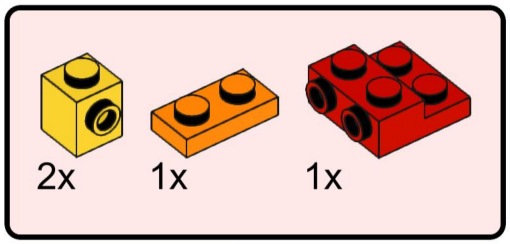

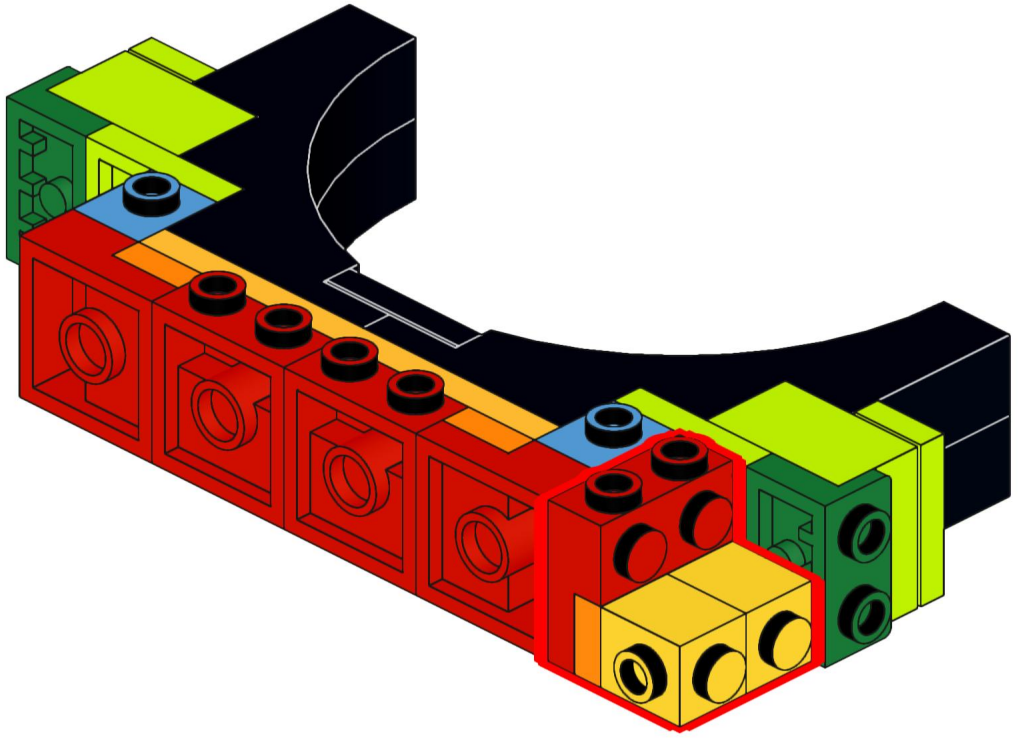

25

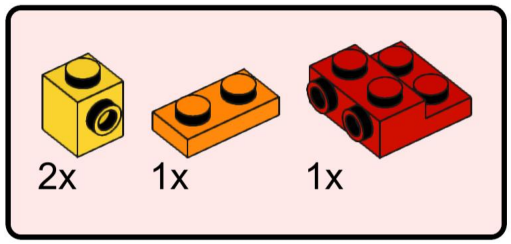

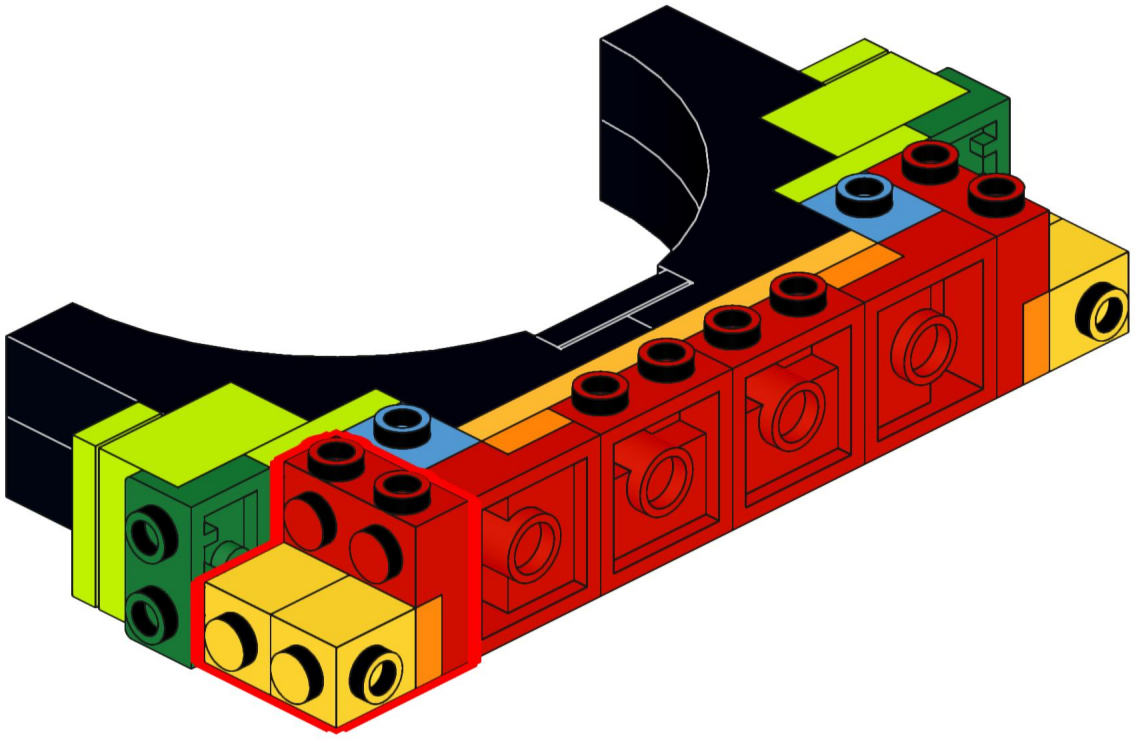

26

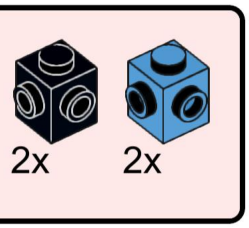

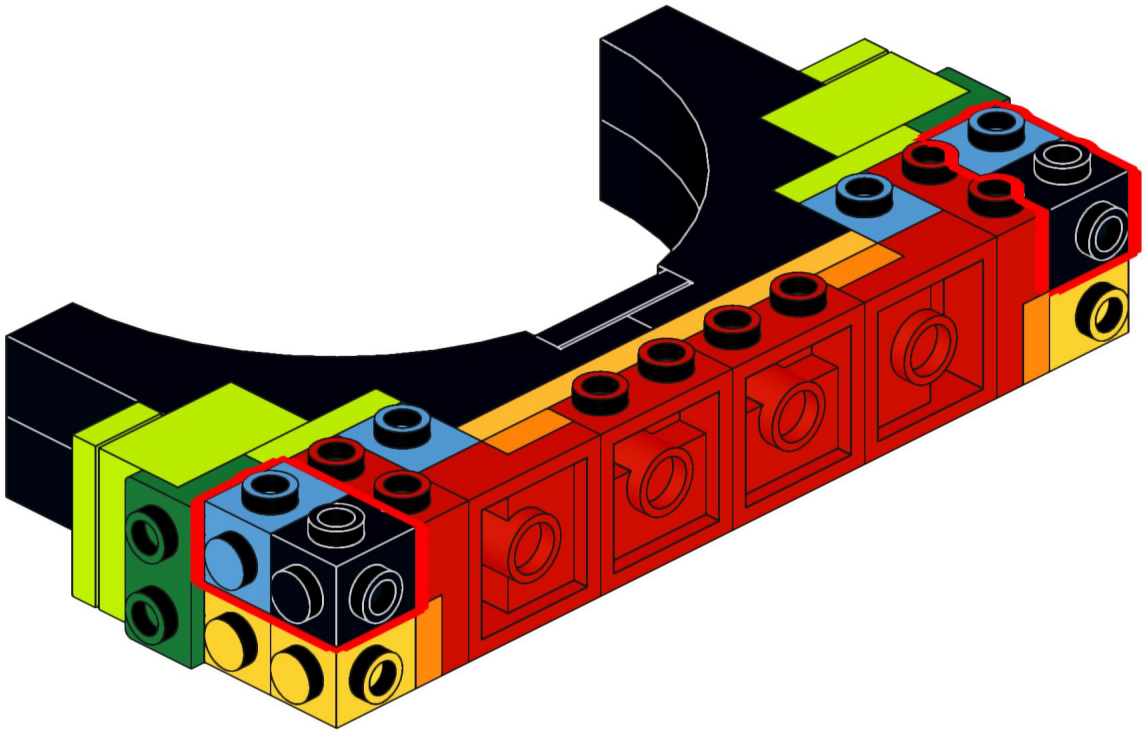

27

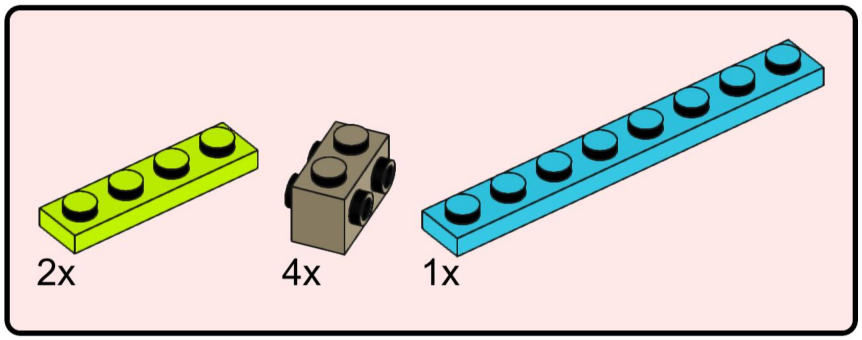

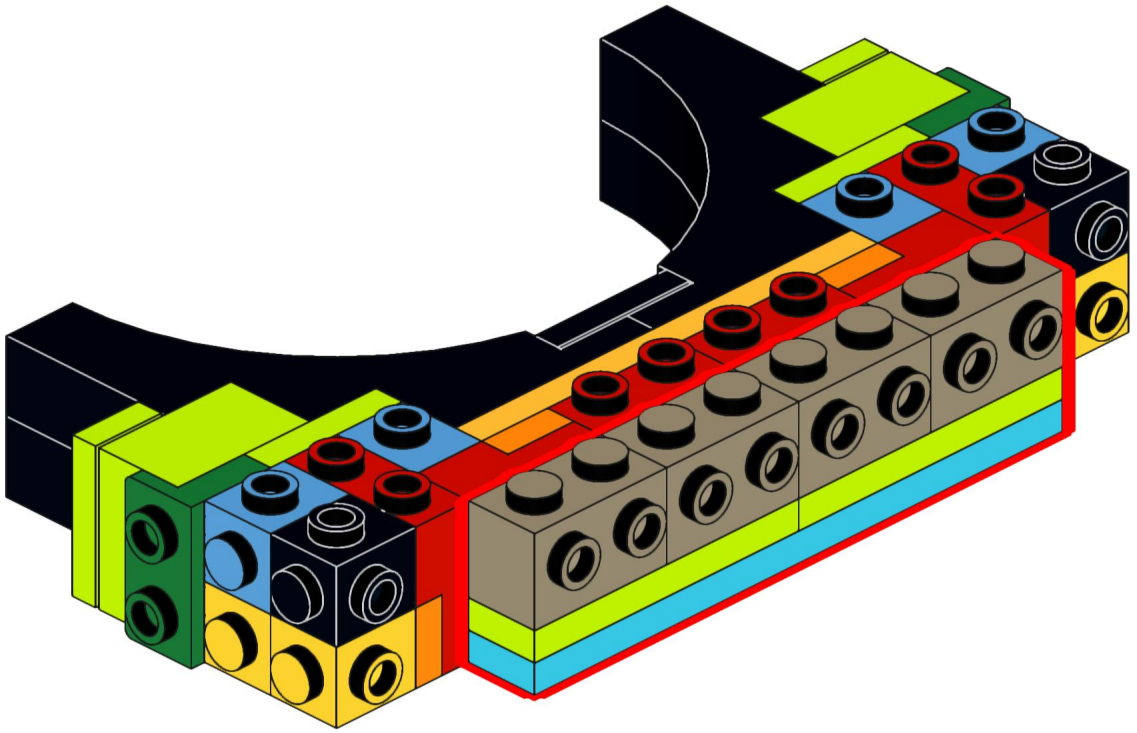

28

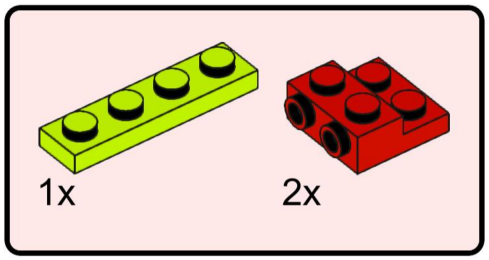

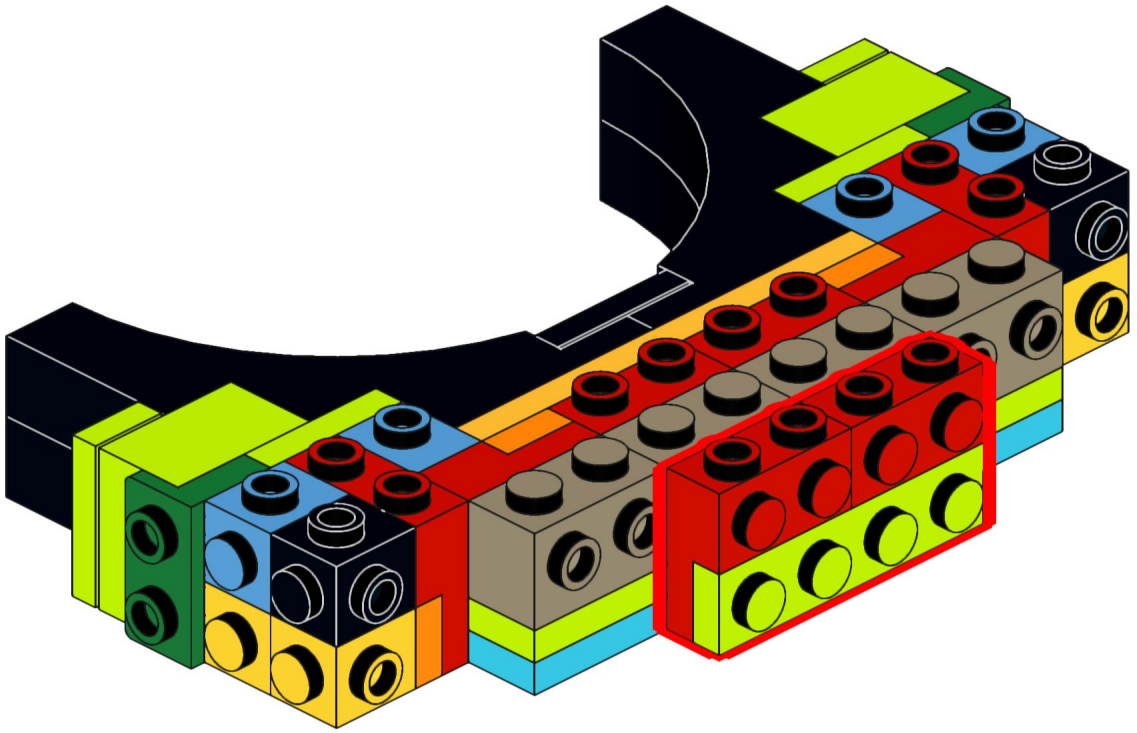

29

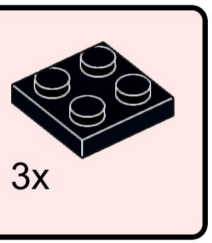

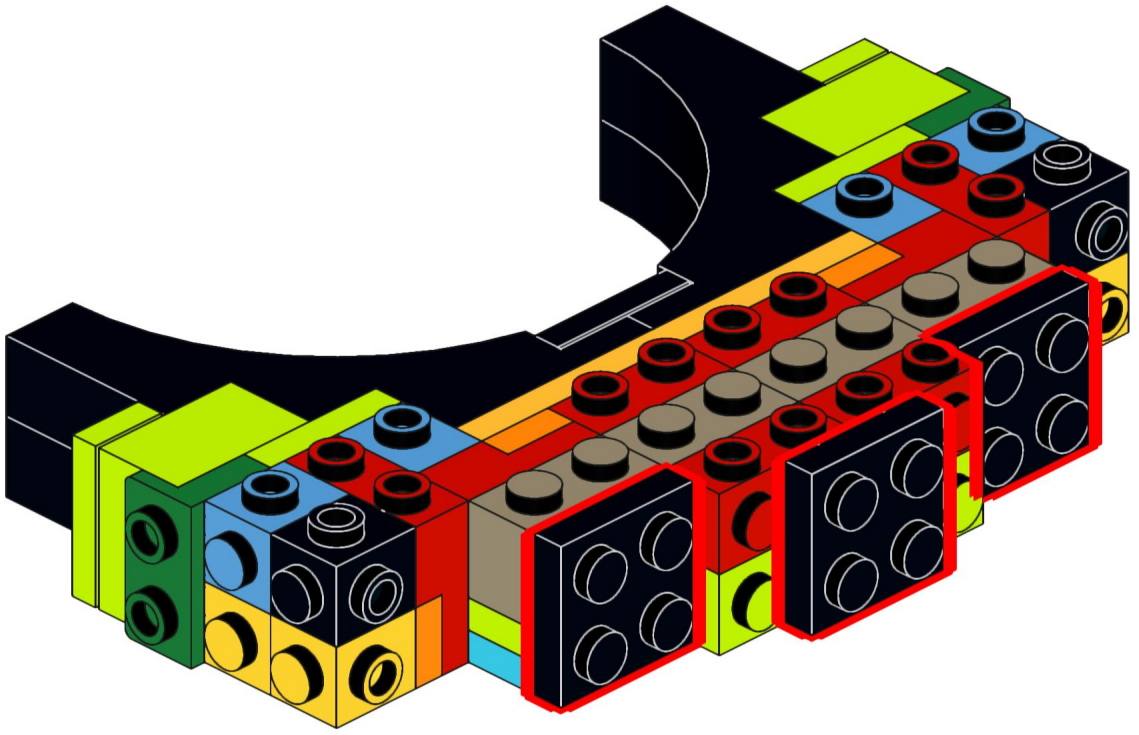

30

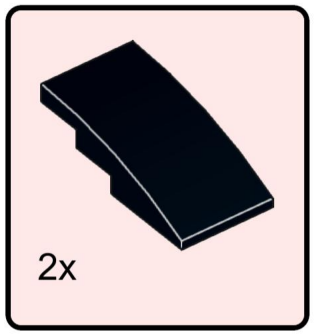

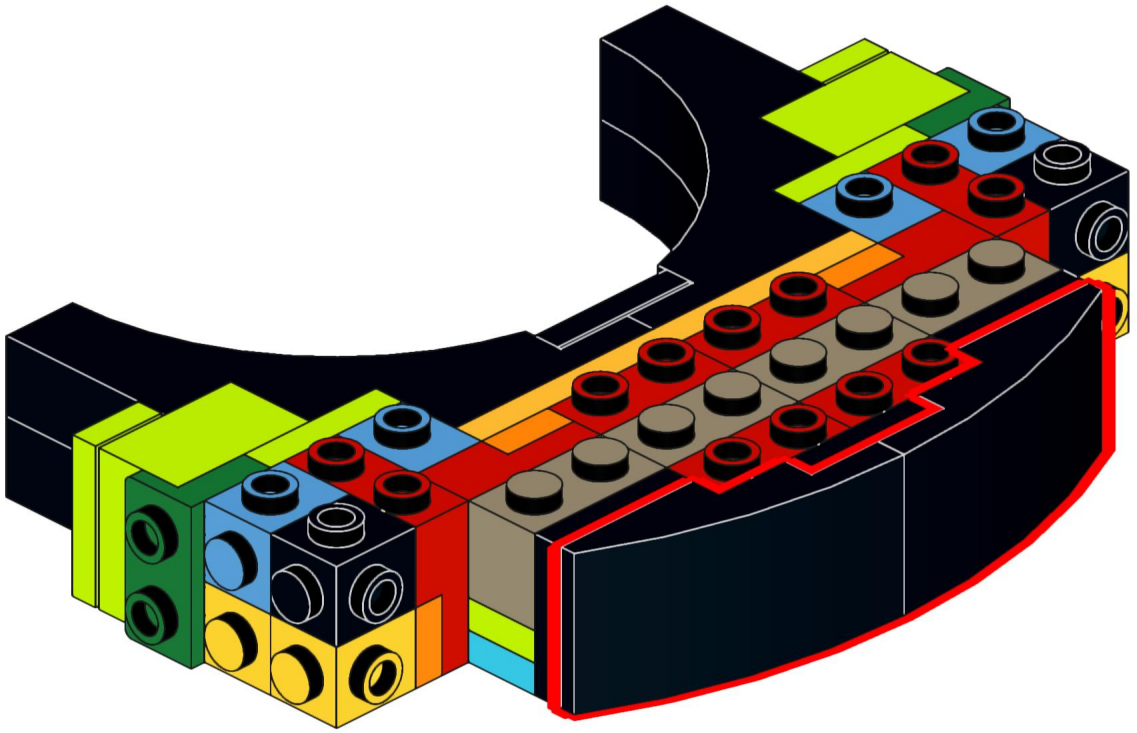

31

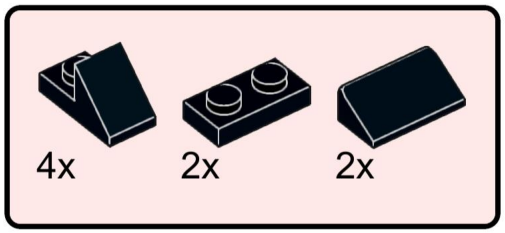

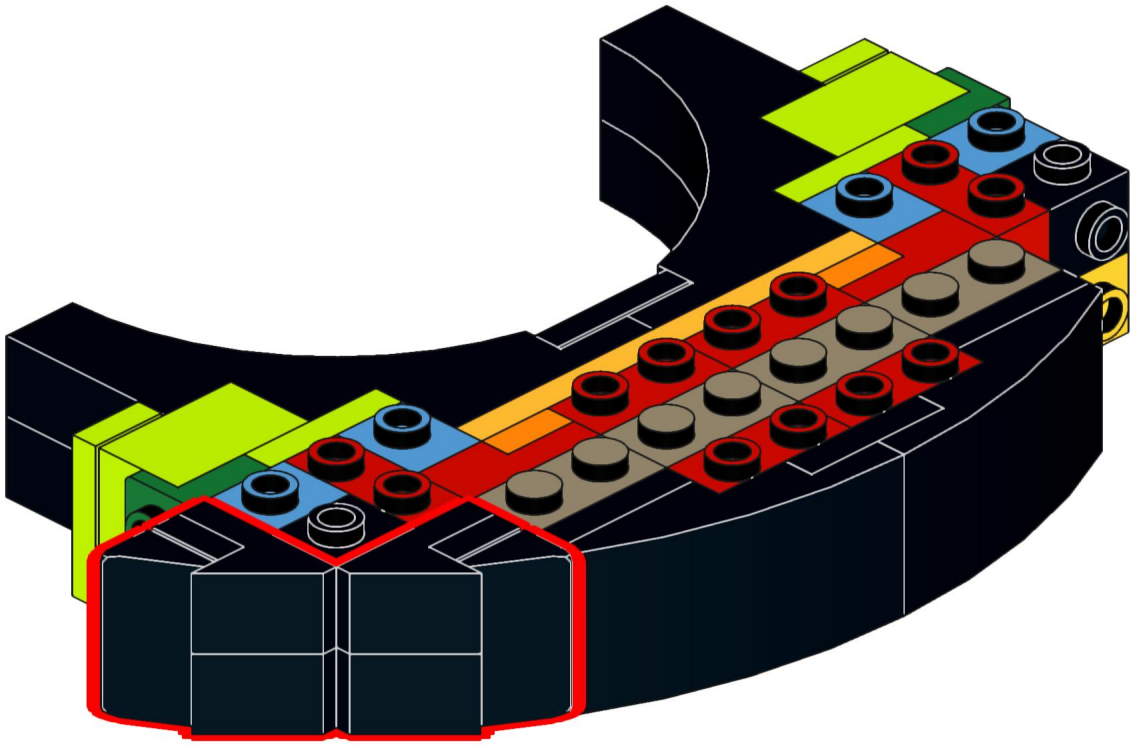

32

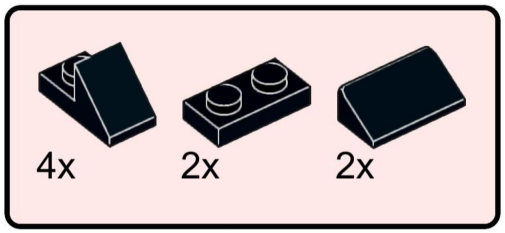

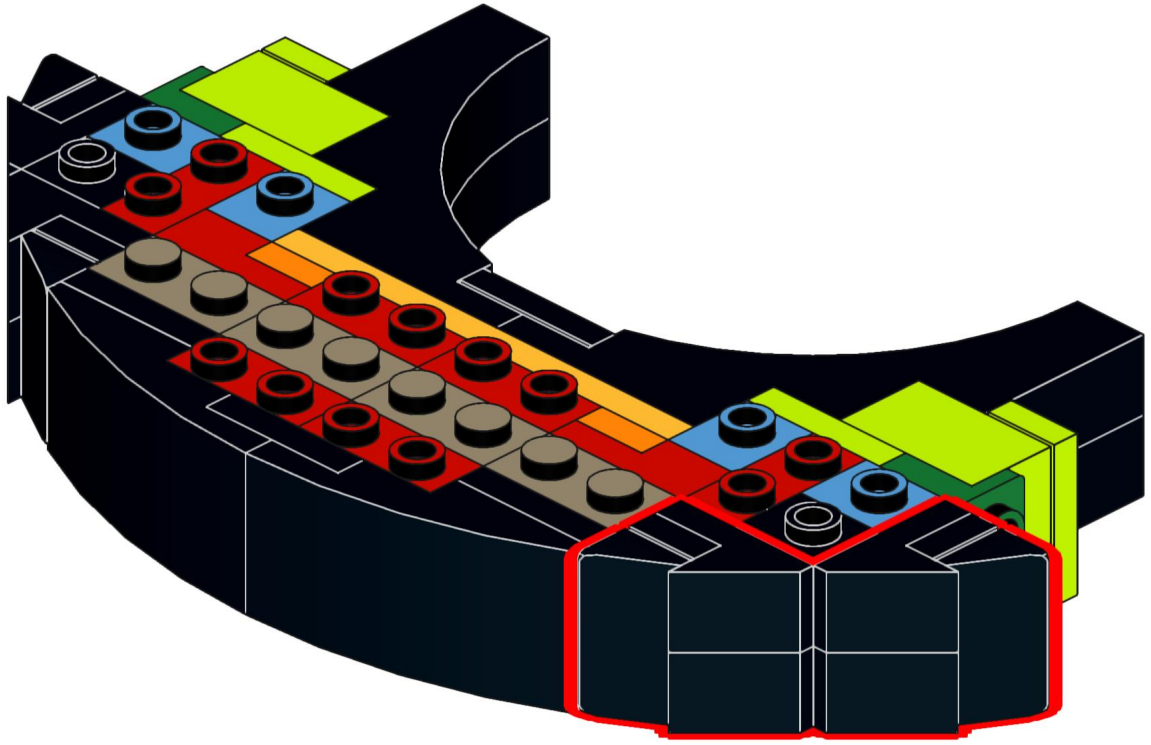

33

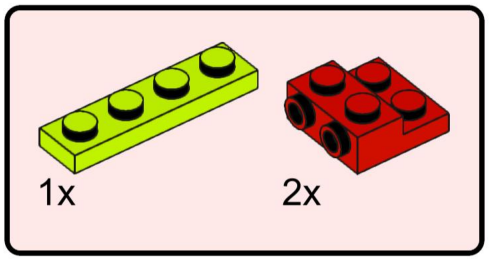

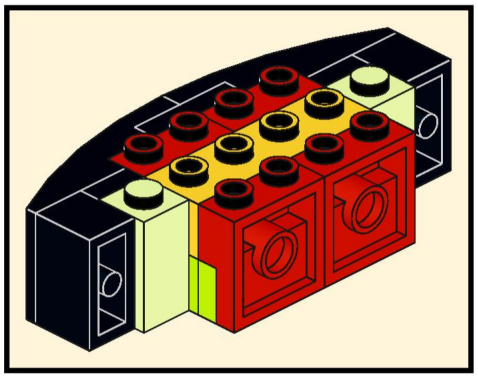

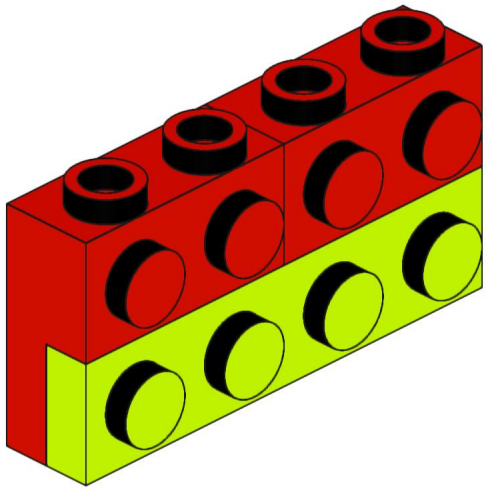

34

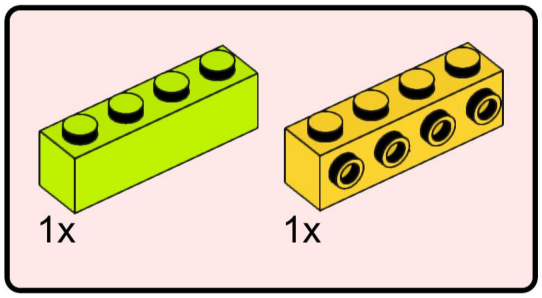

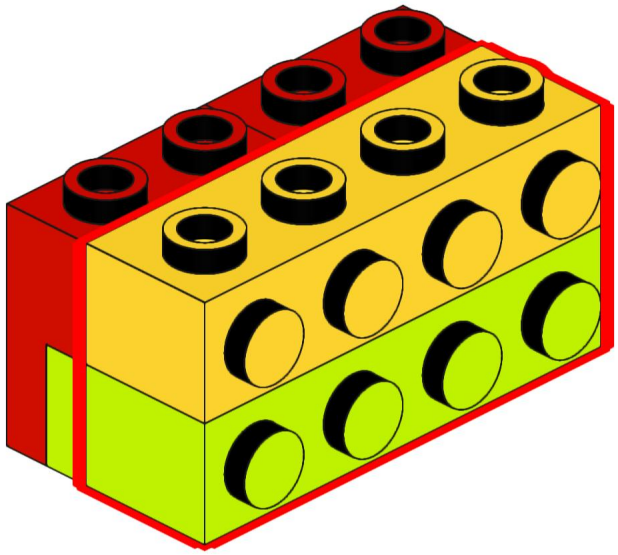

35

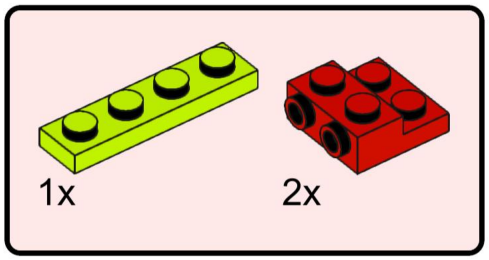

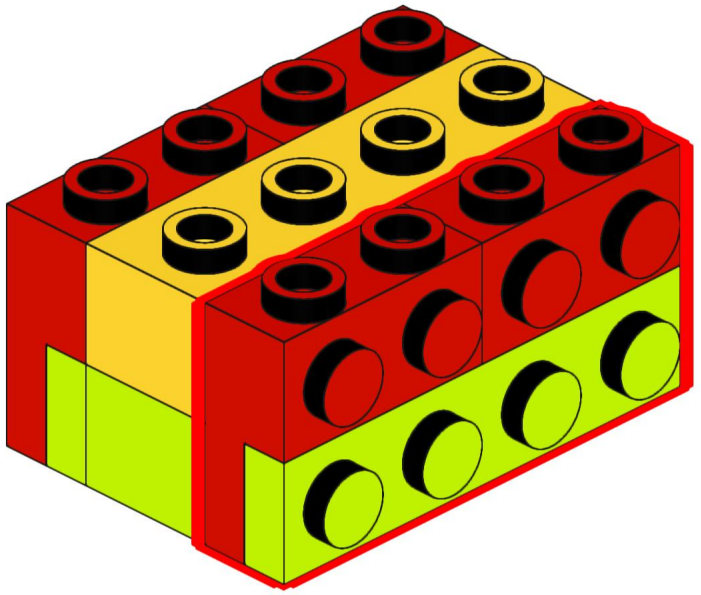

36

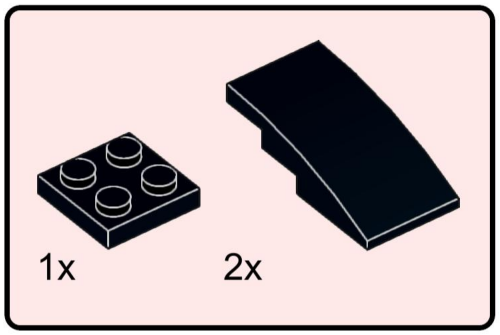

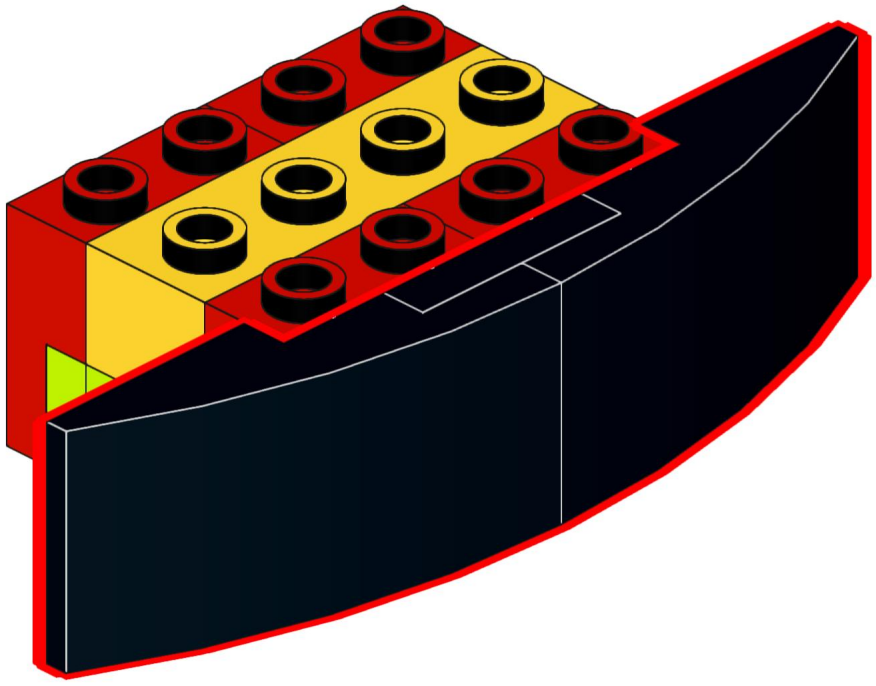

37

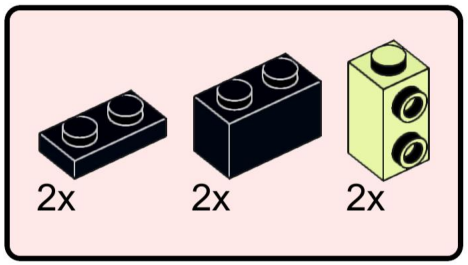

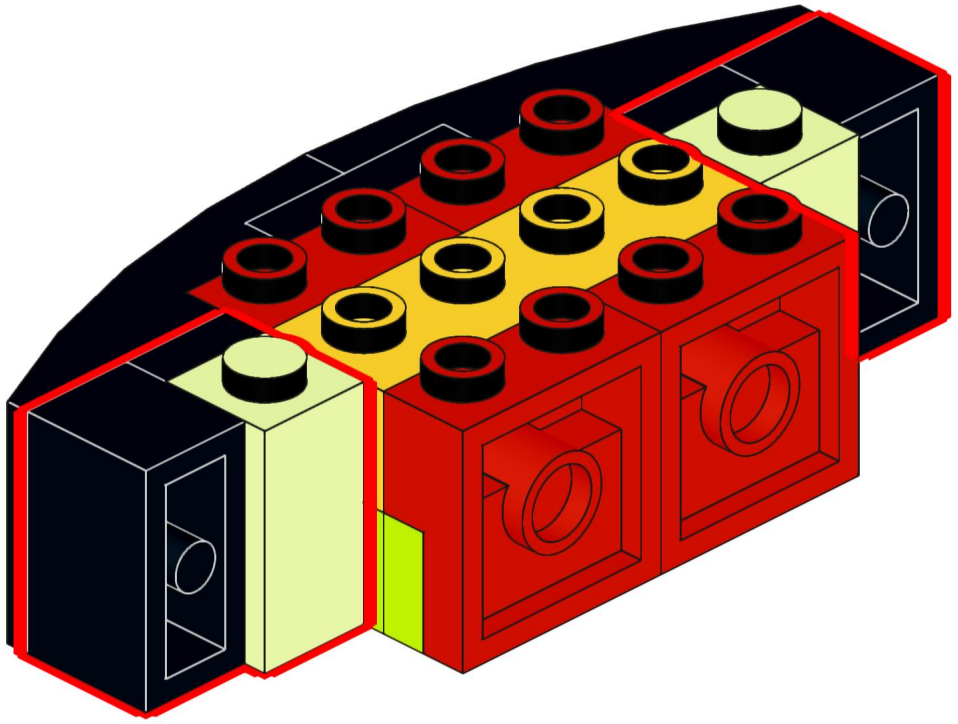

38

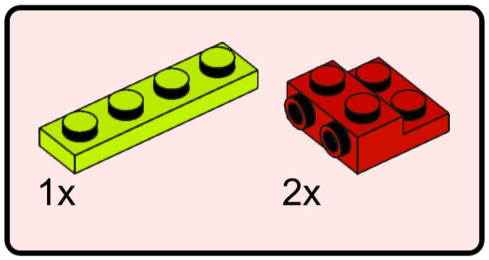

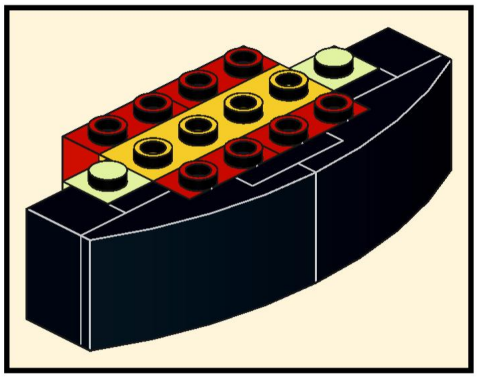

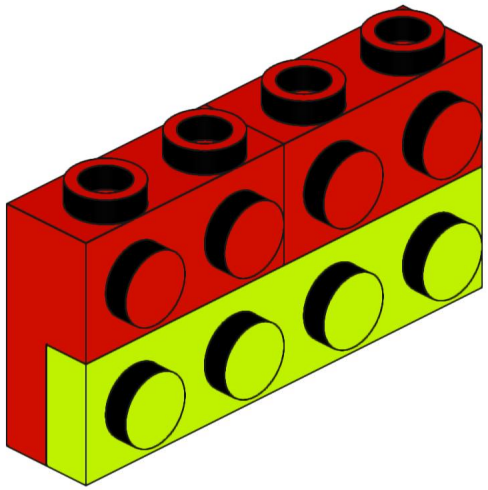

39

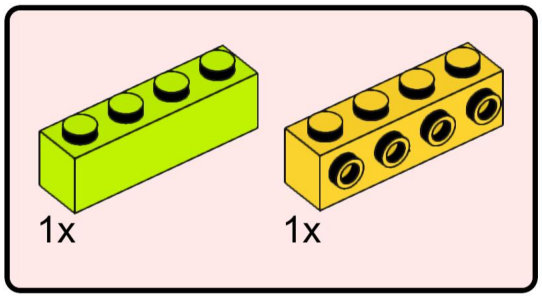

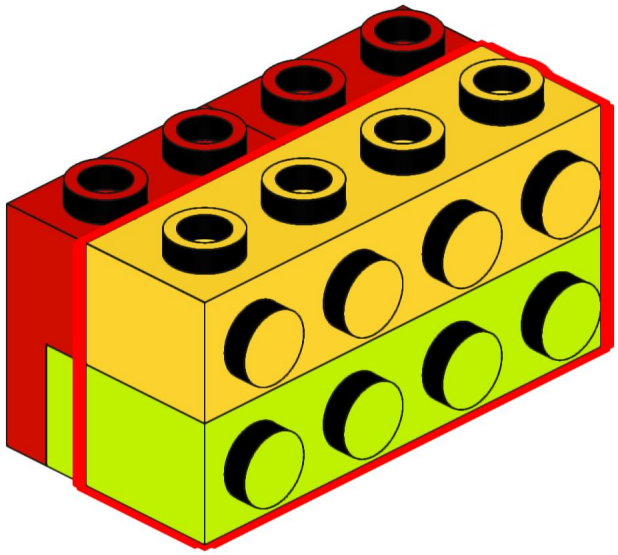

40

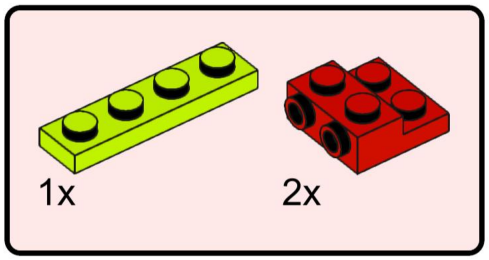

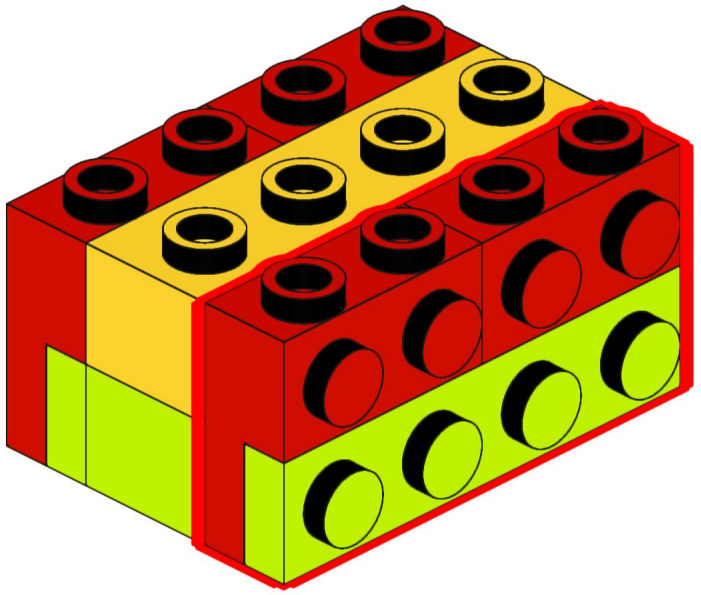

41

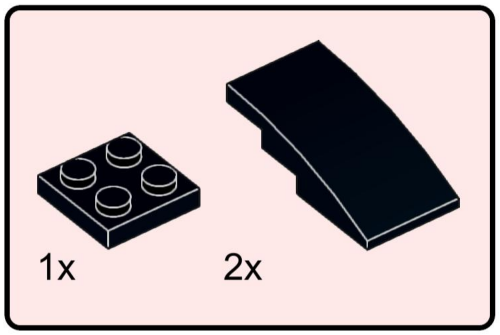

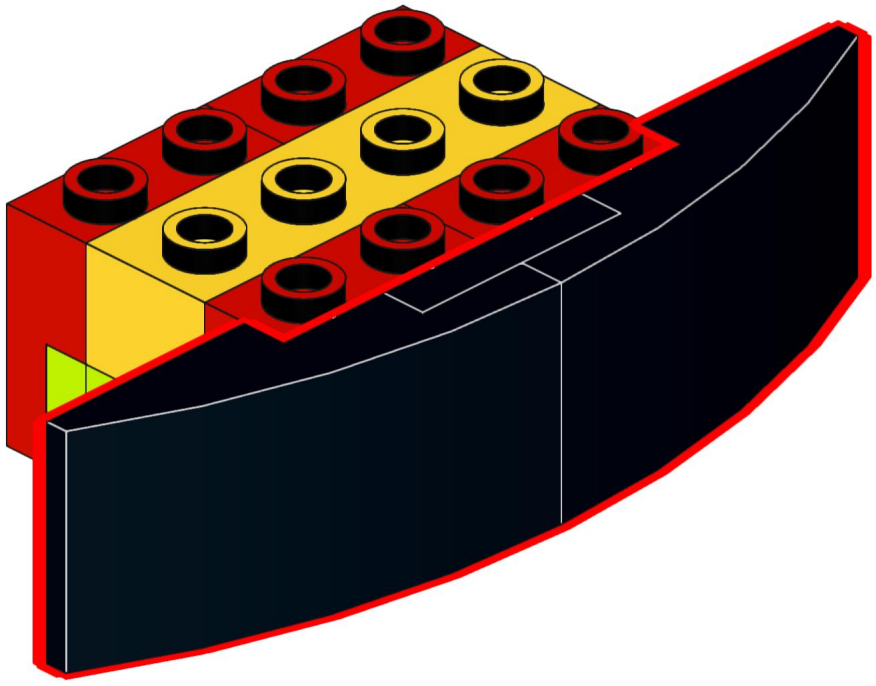

42

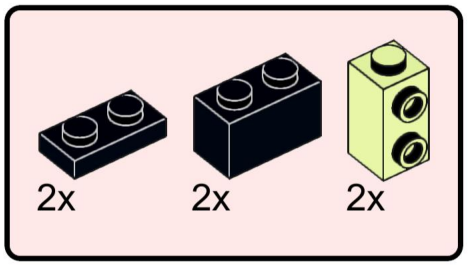

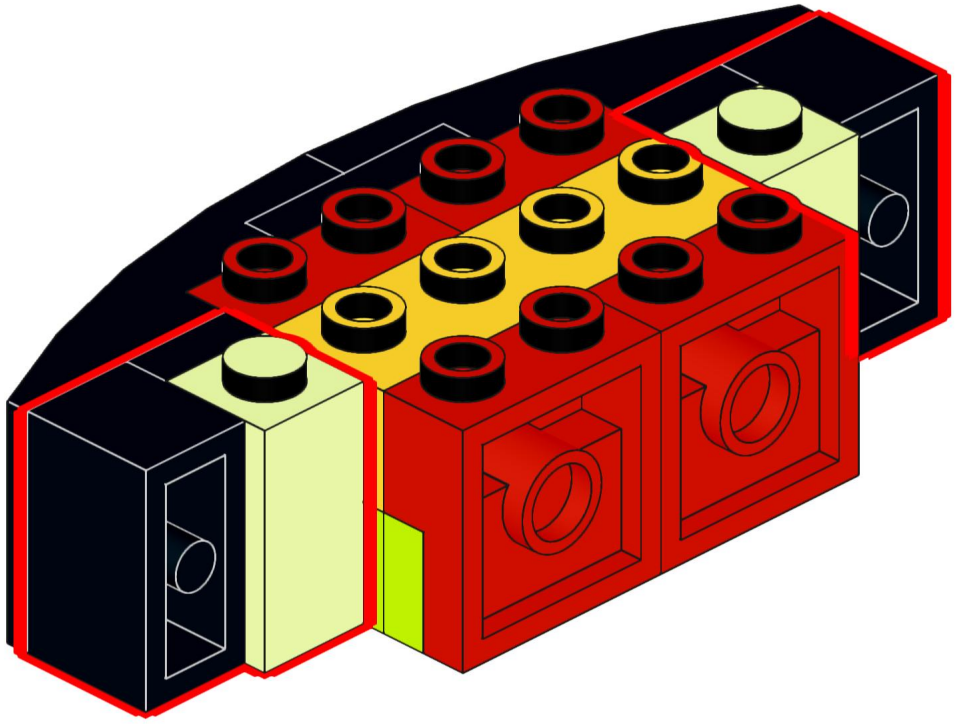

43

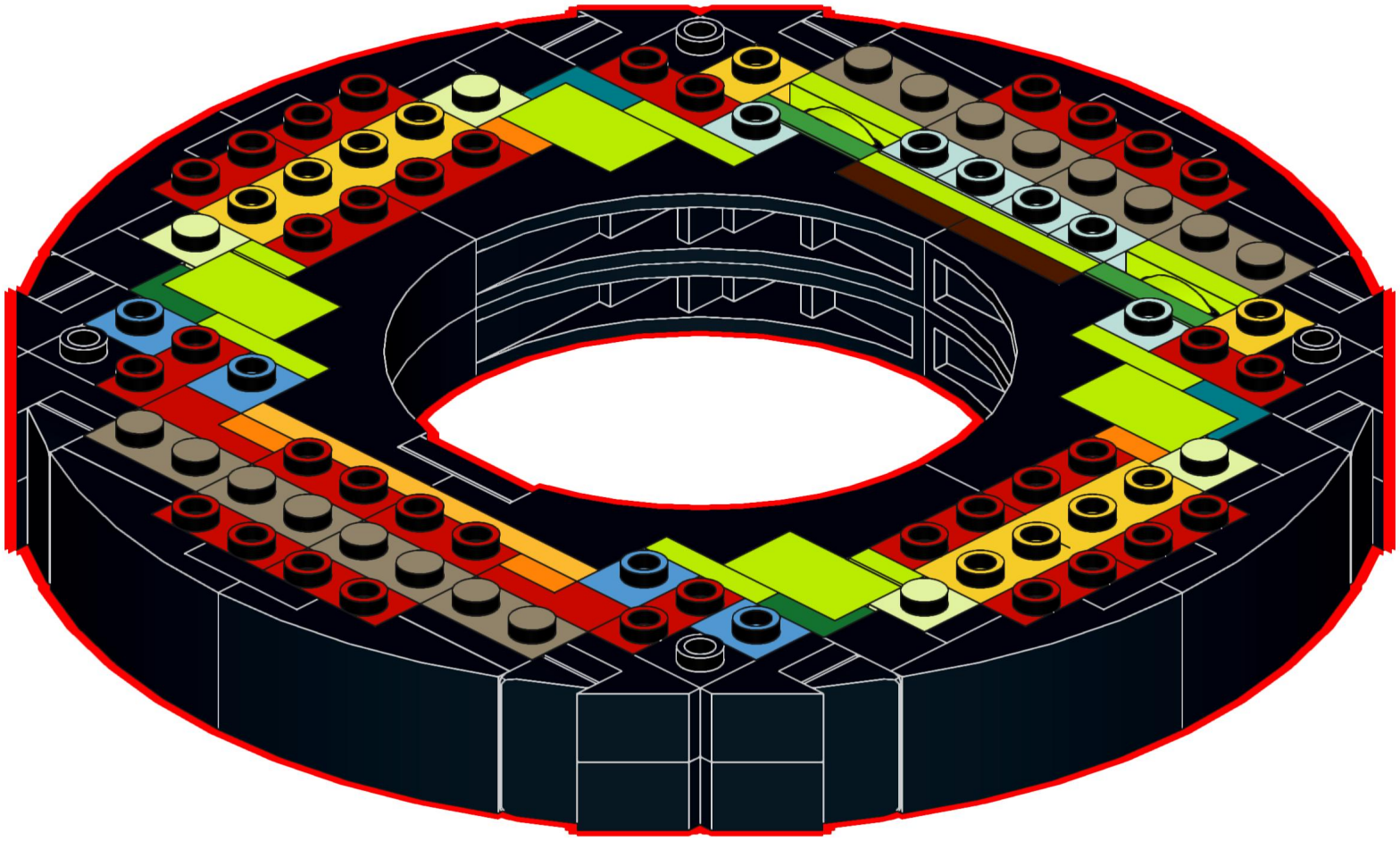

44

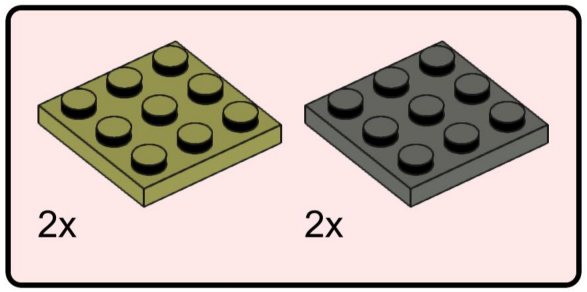

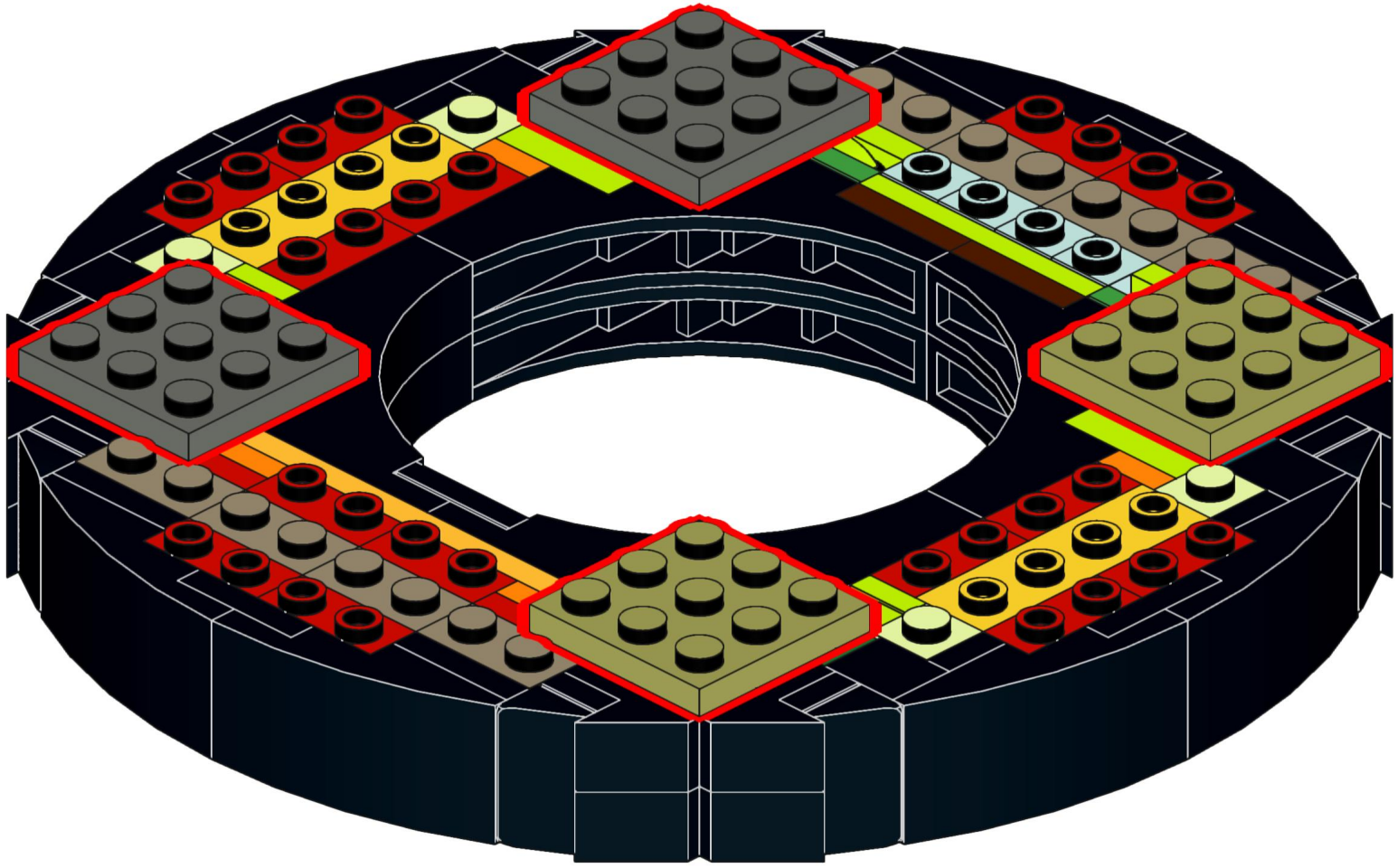

45

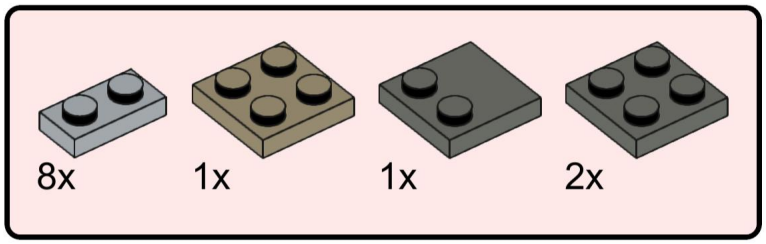

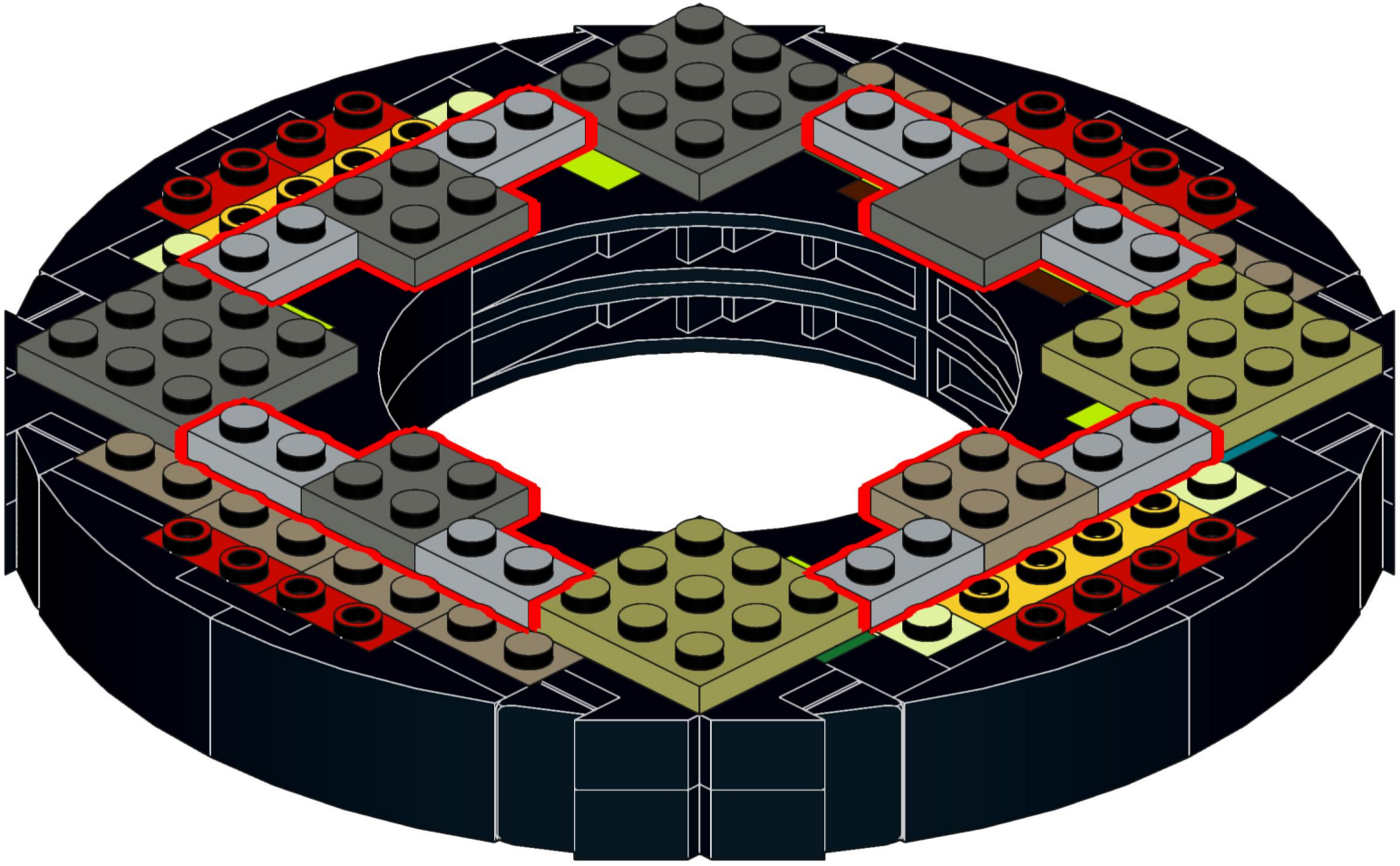

46

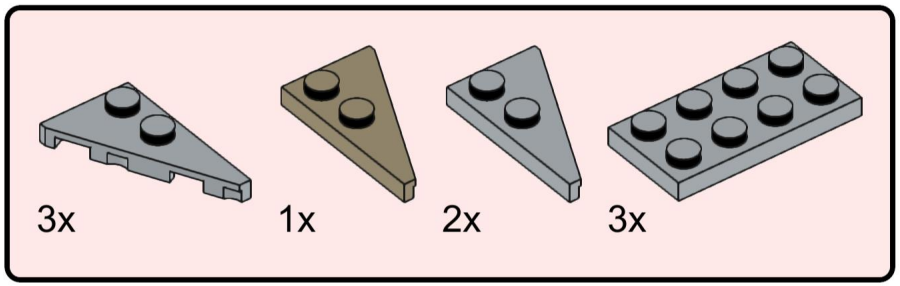

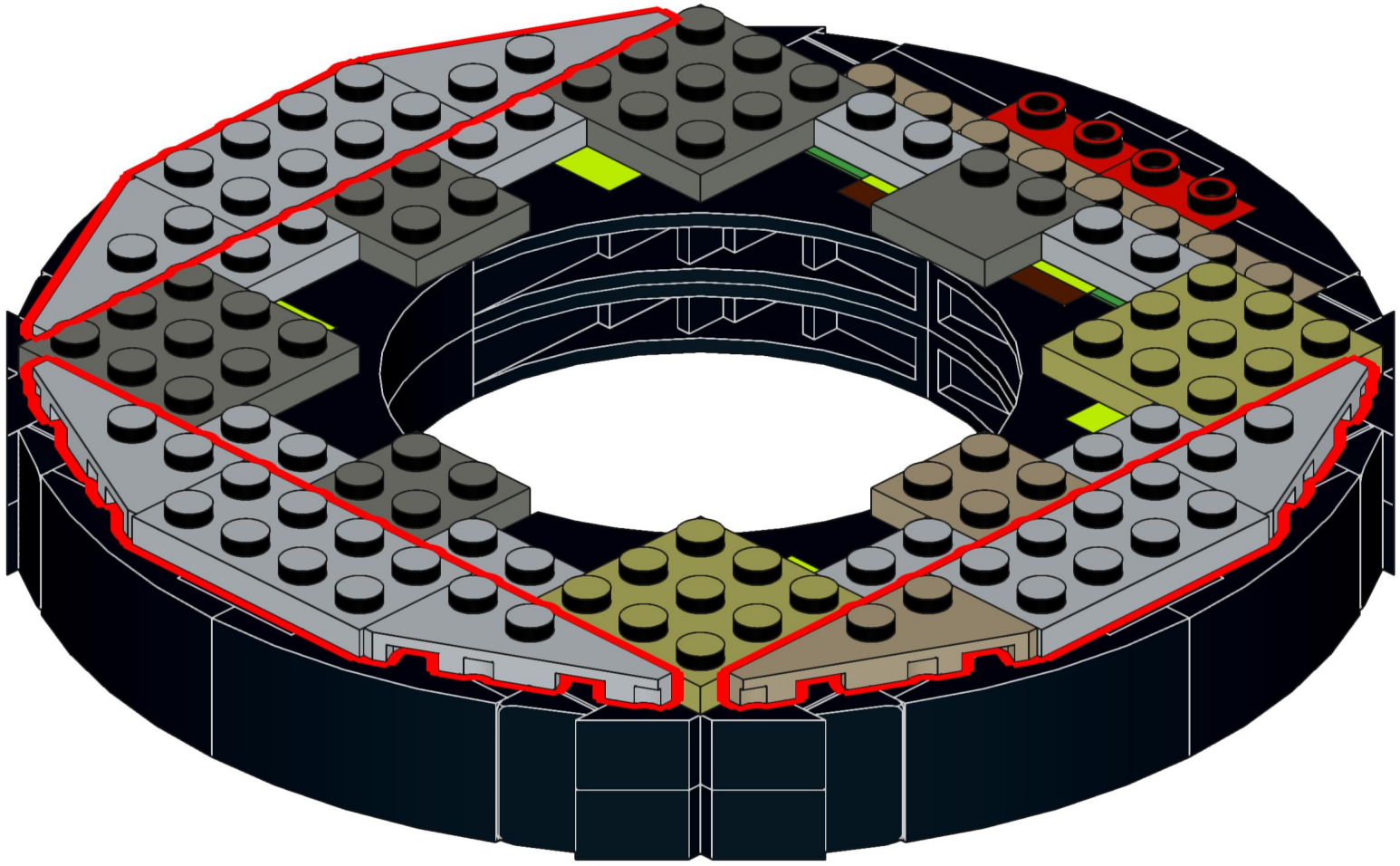

47

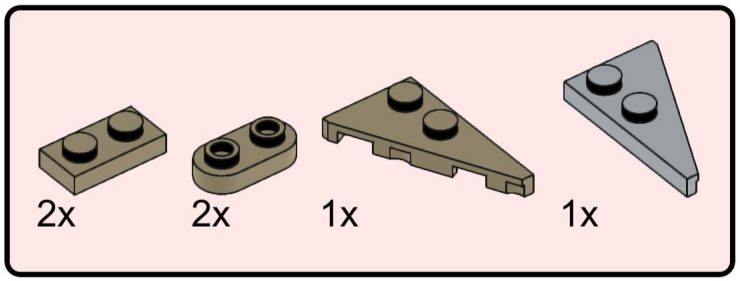

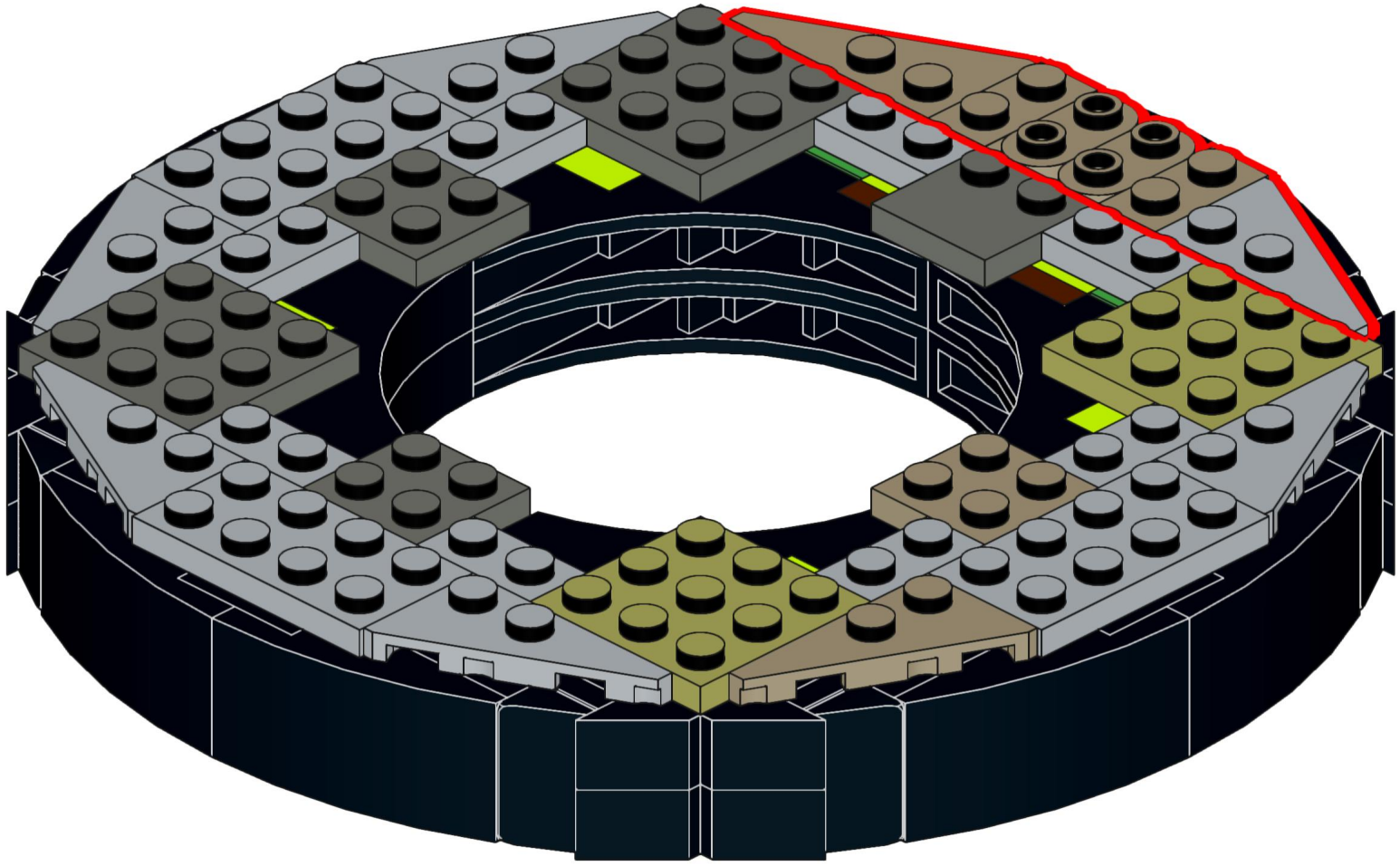

48

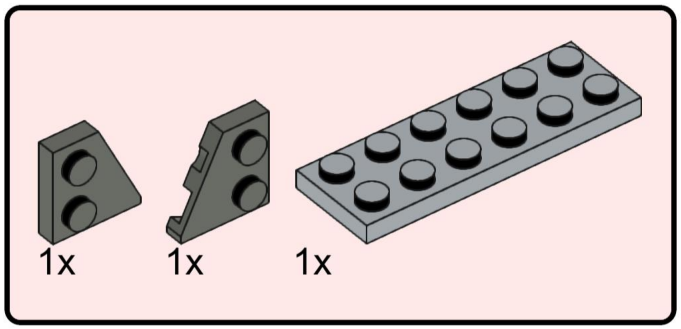

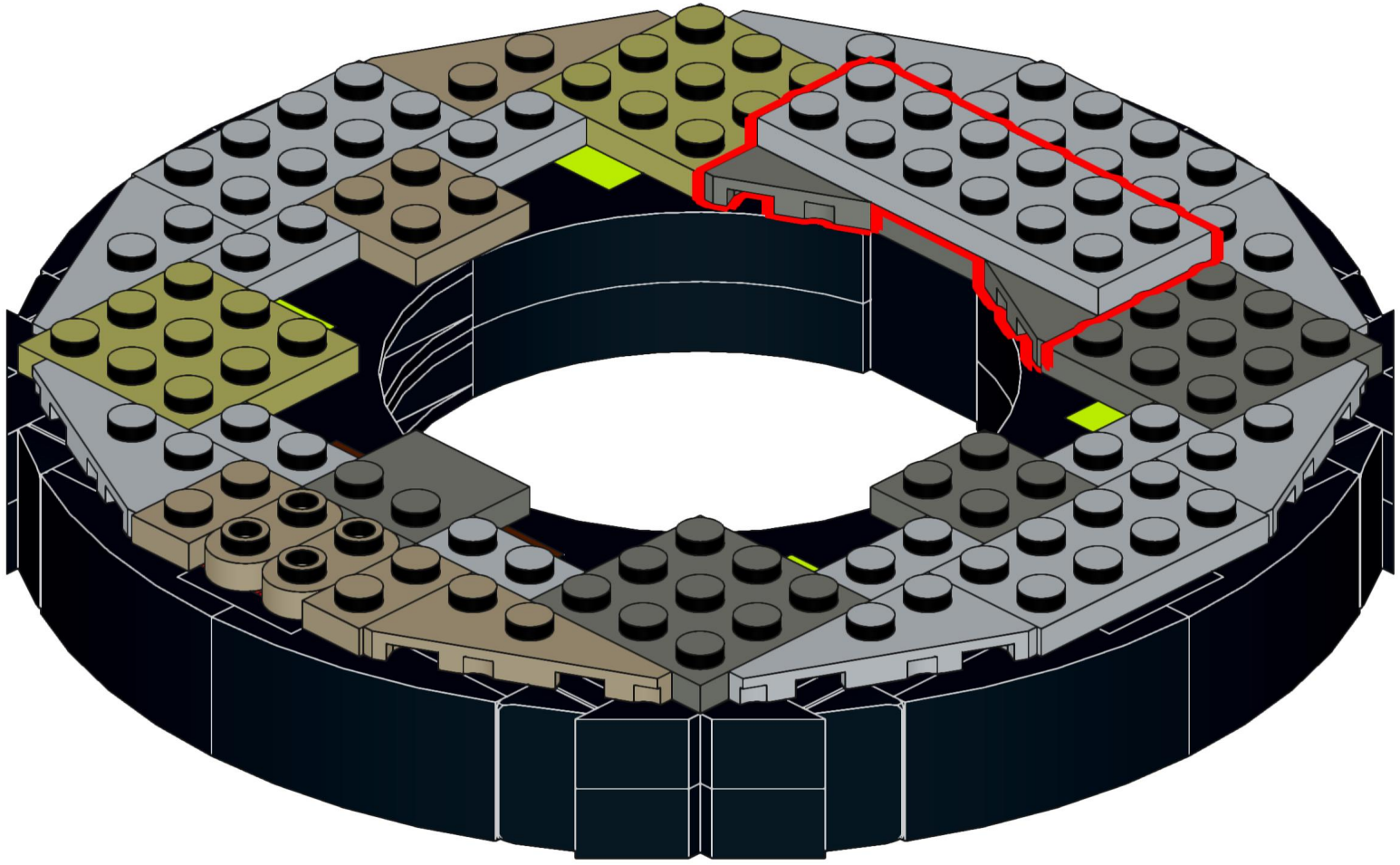

49

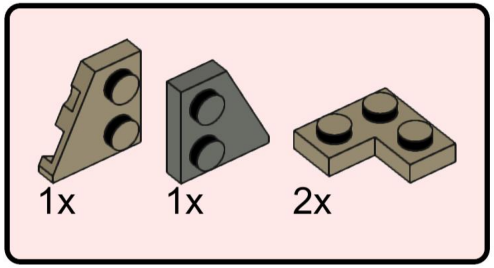

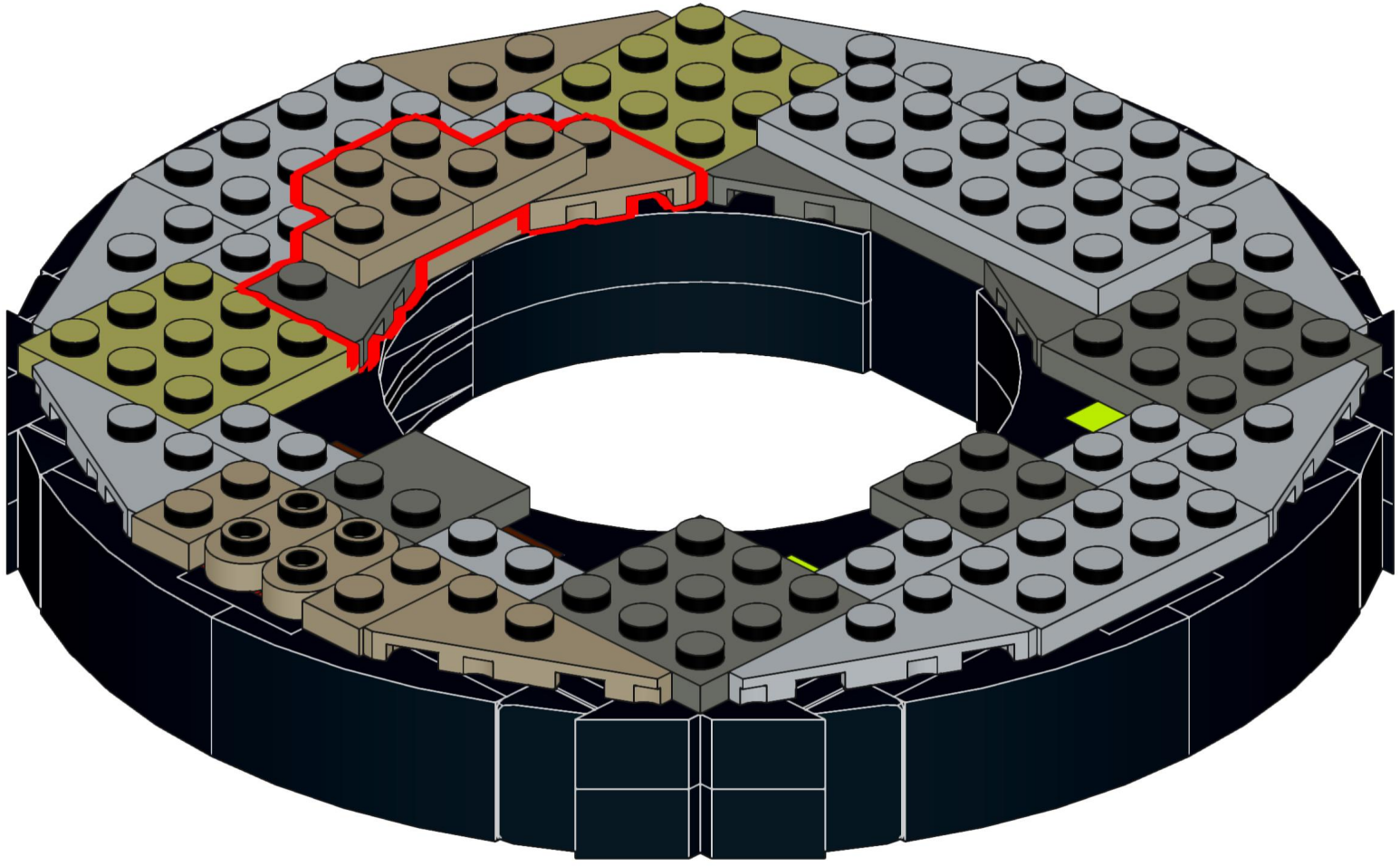

50

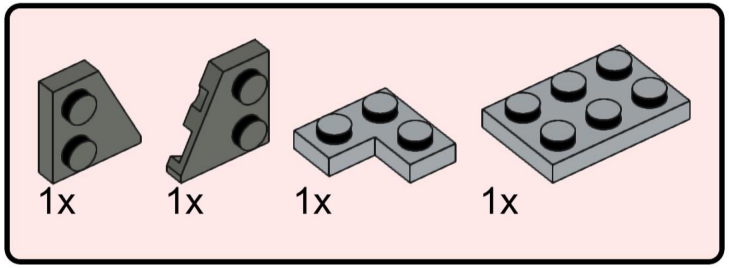

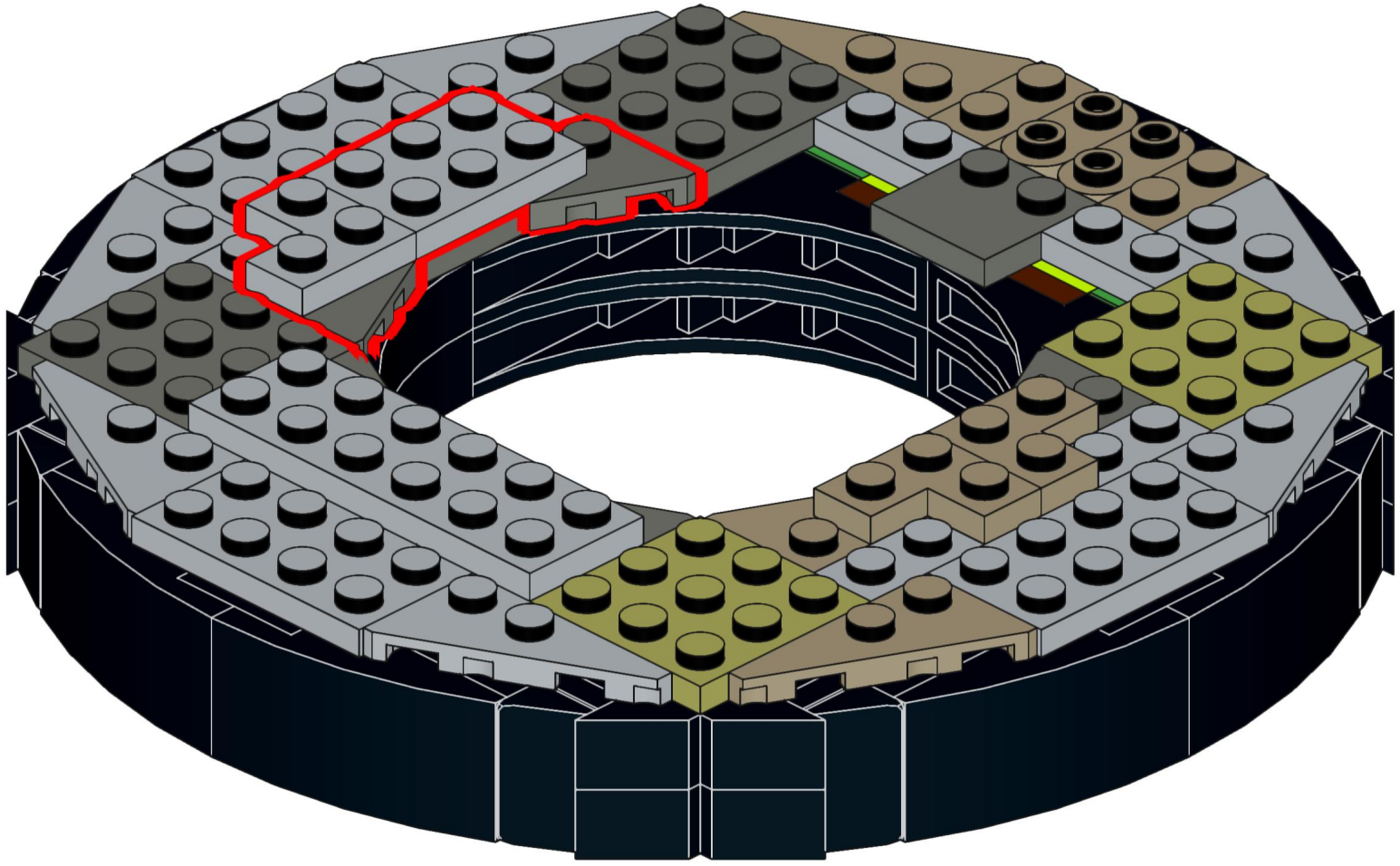

51

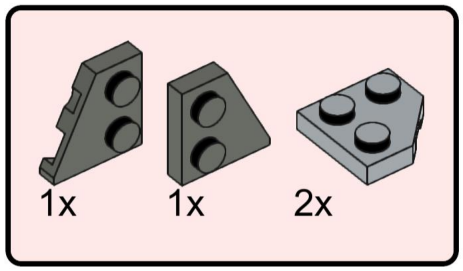

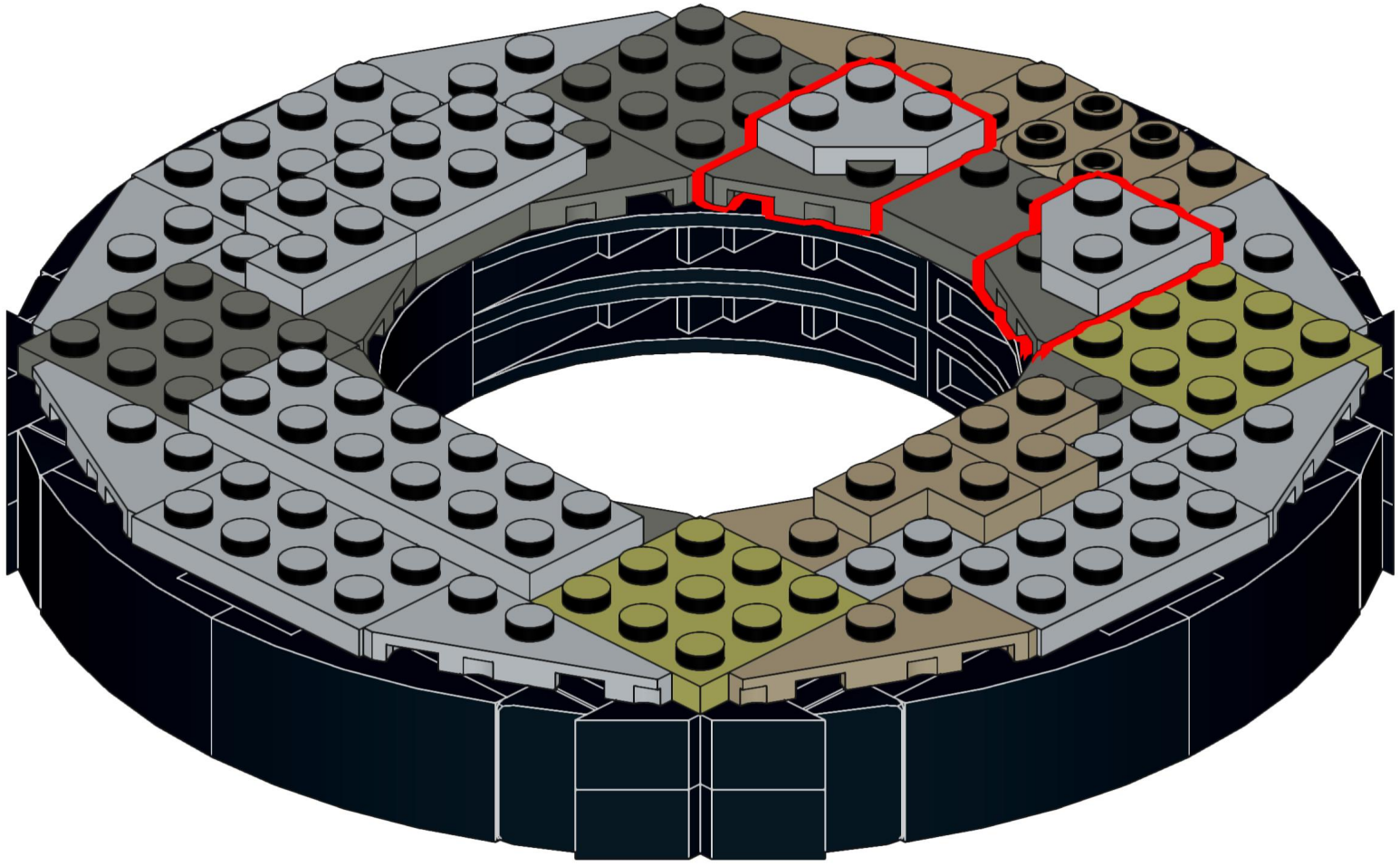

52

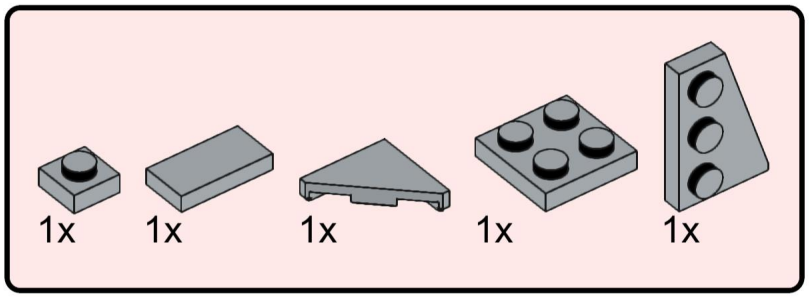

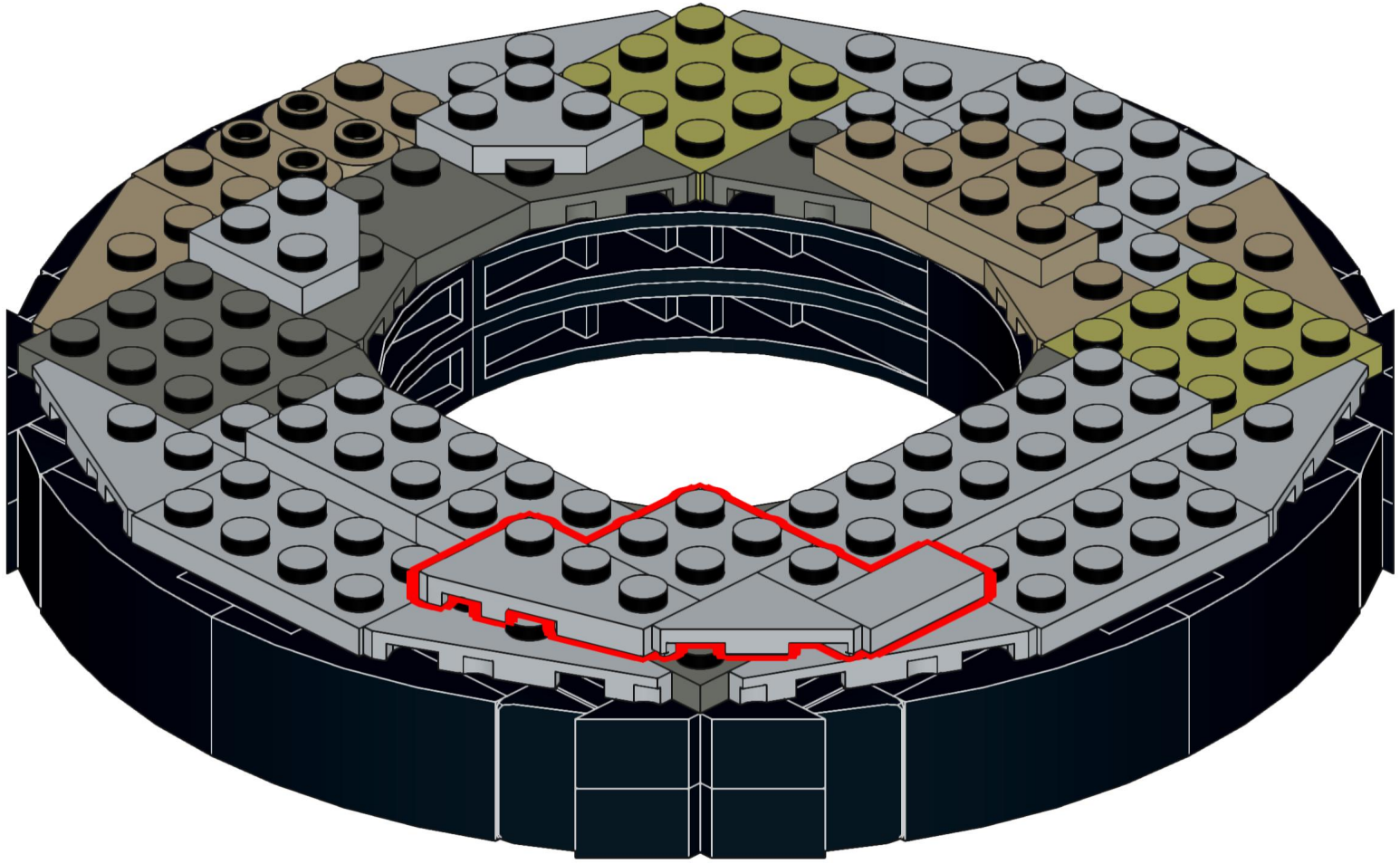

53

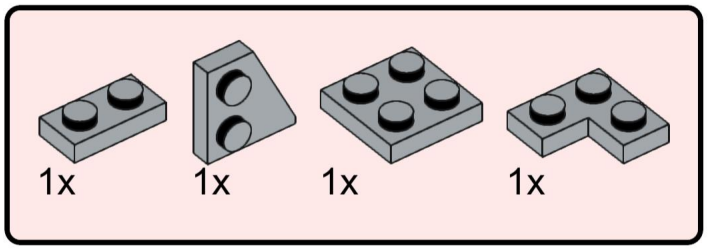

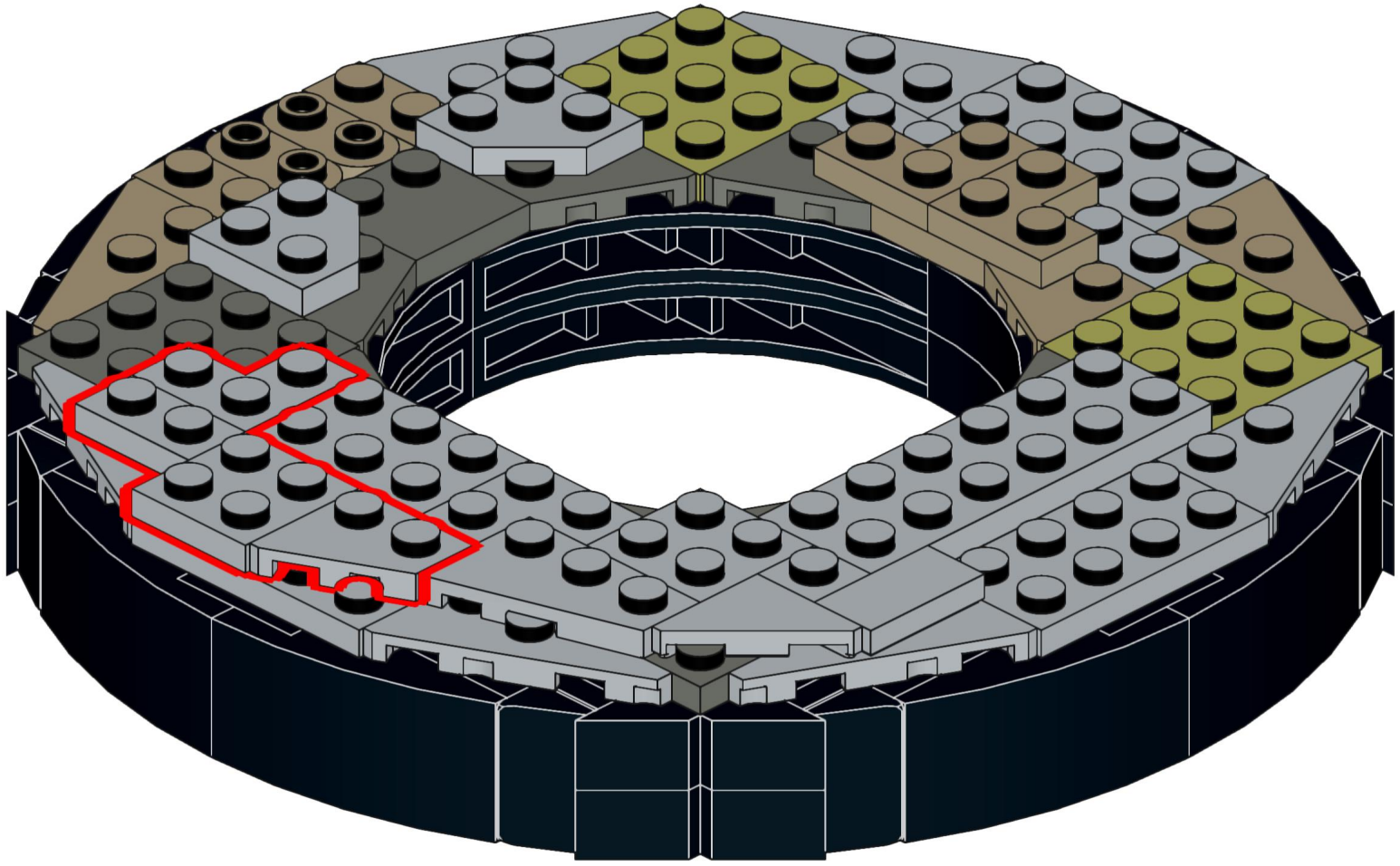

54

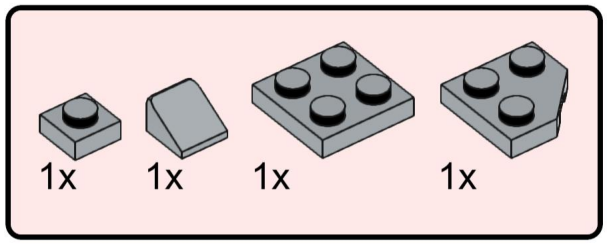

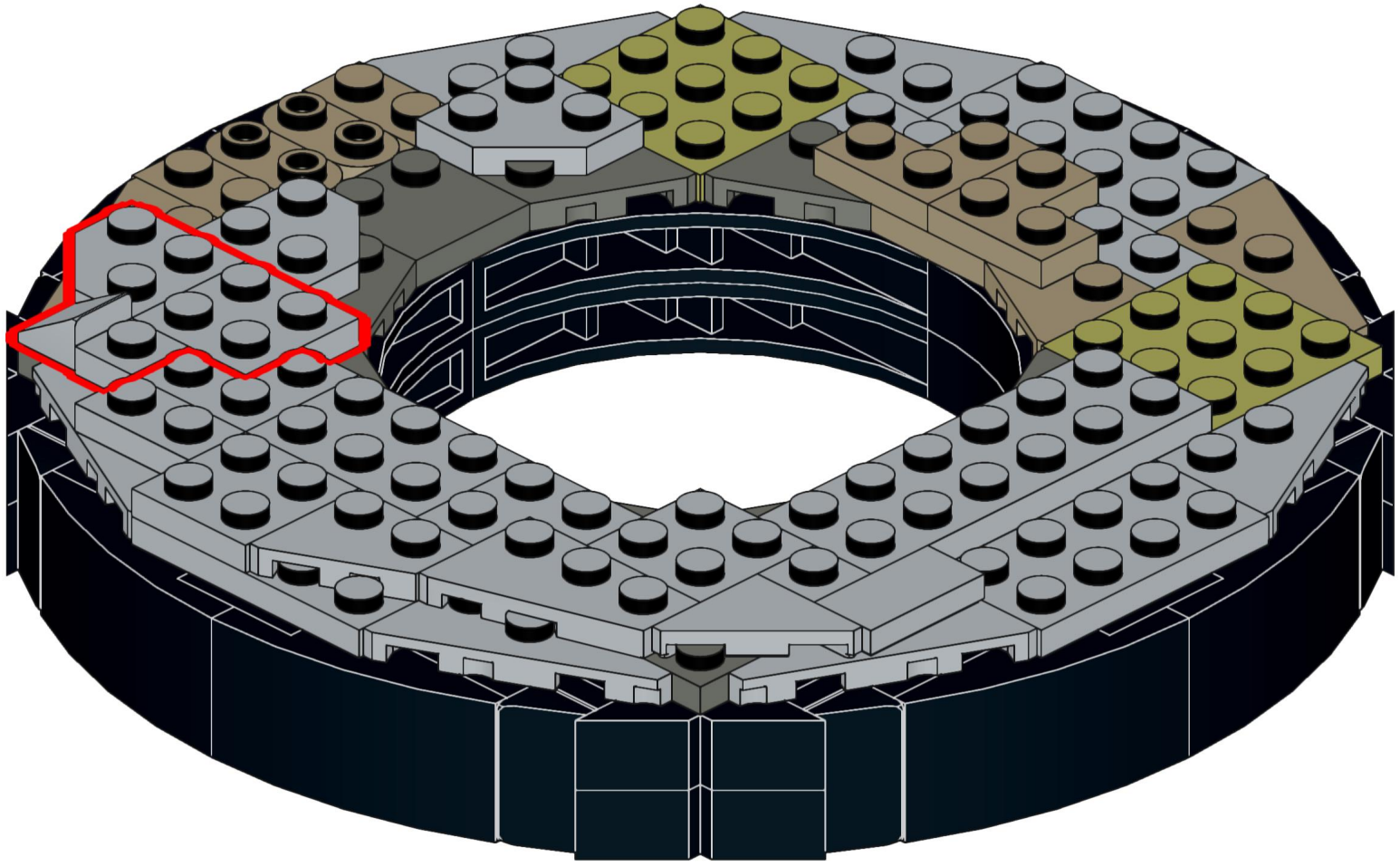

55

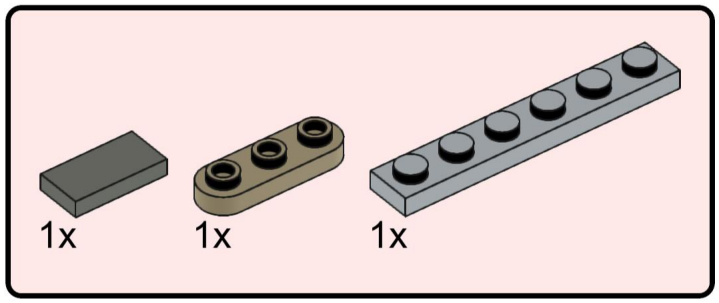

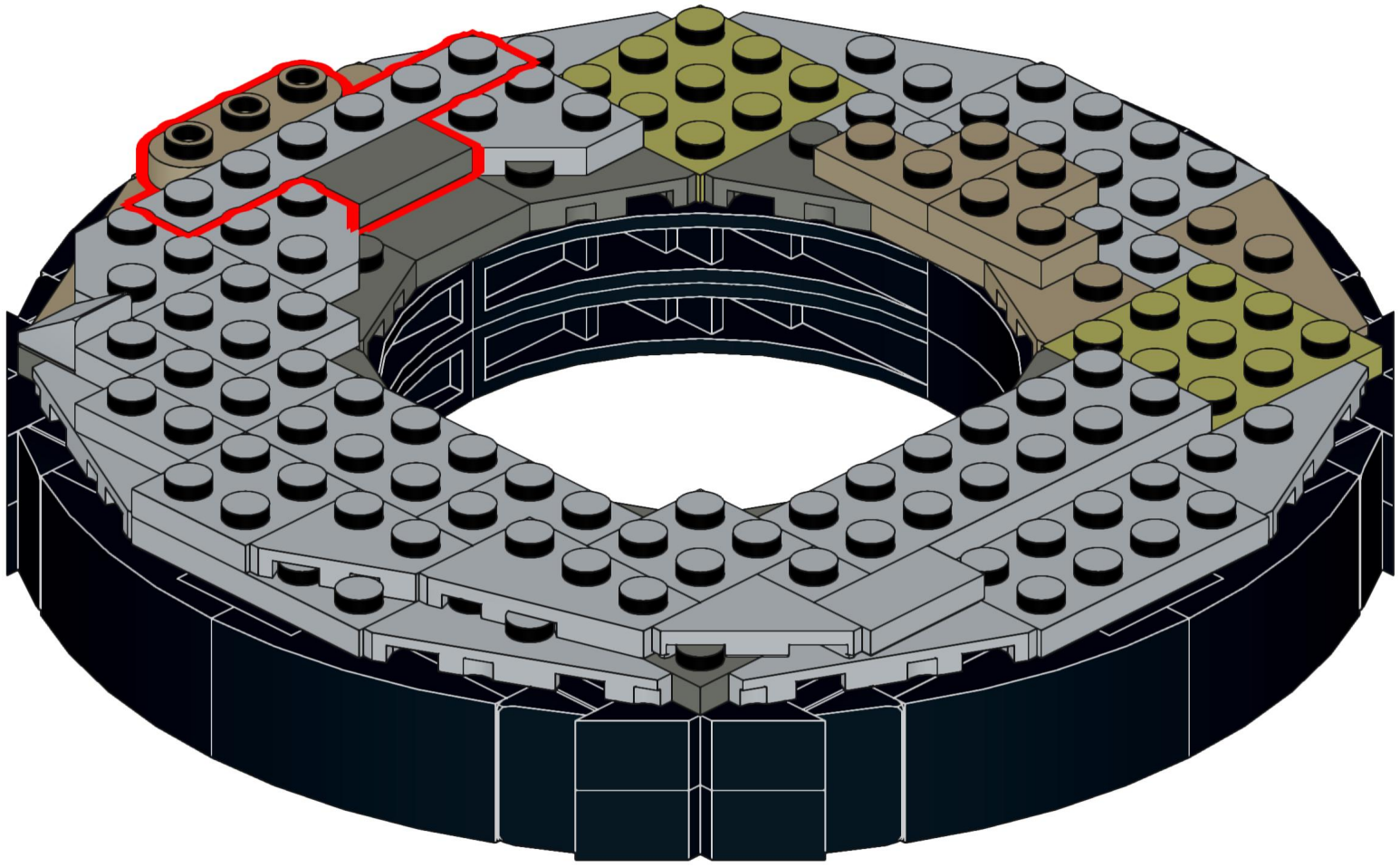

56

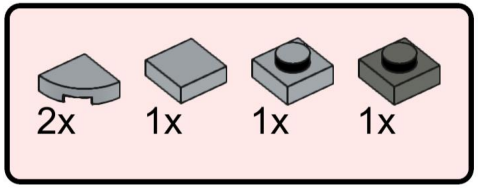

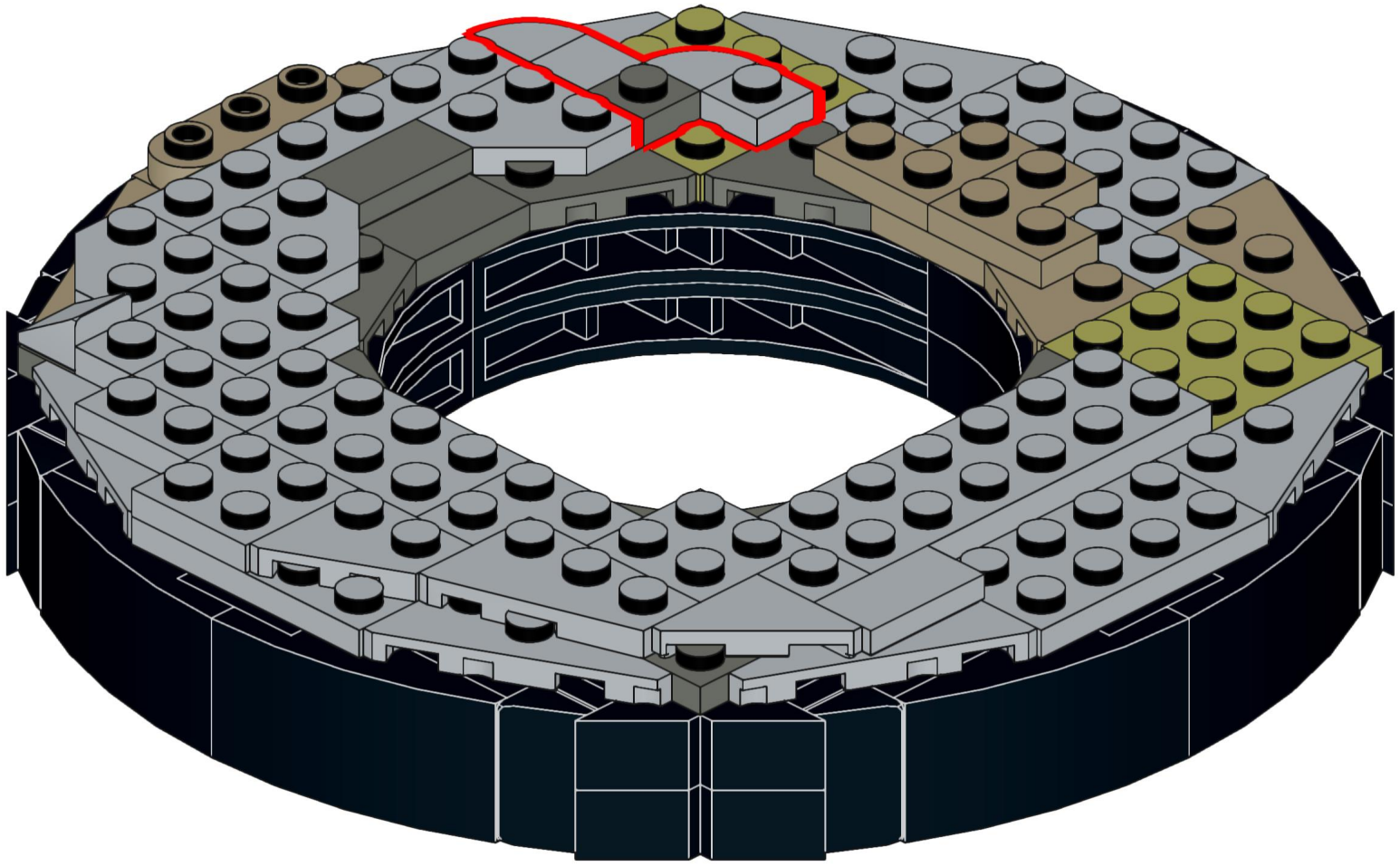

57

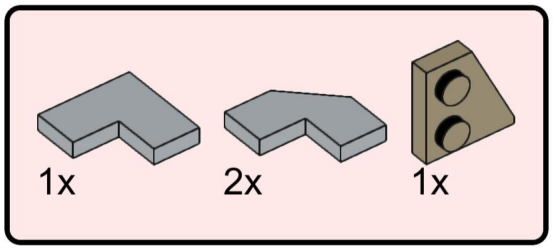

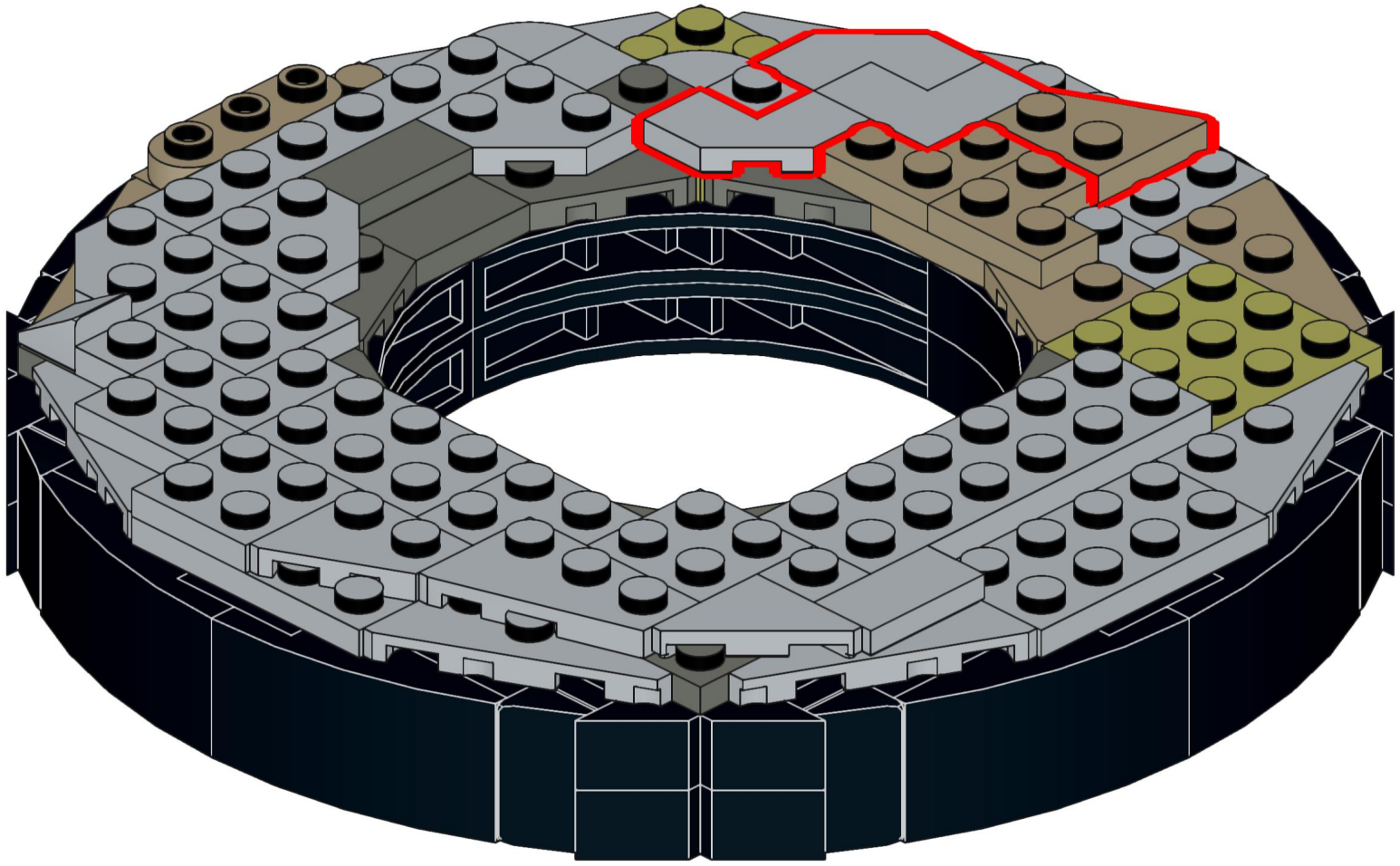

58

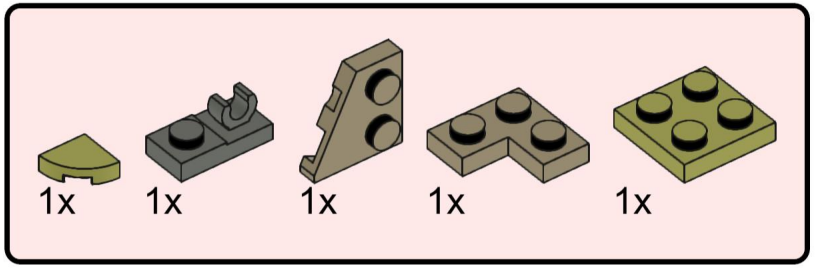

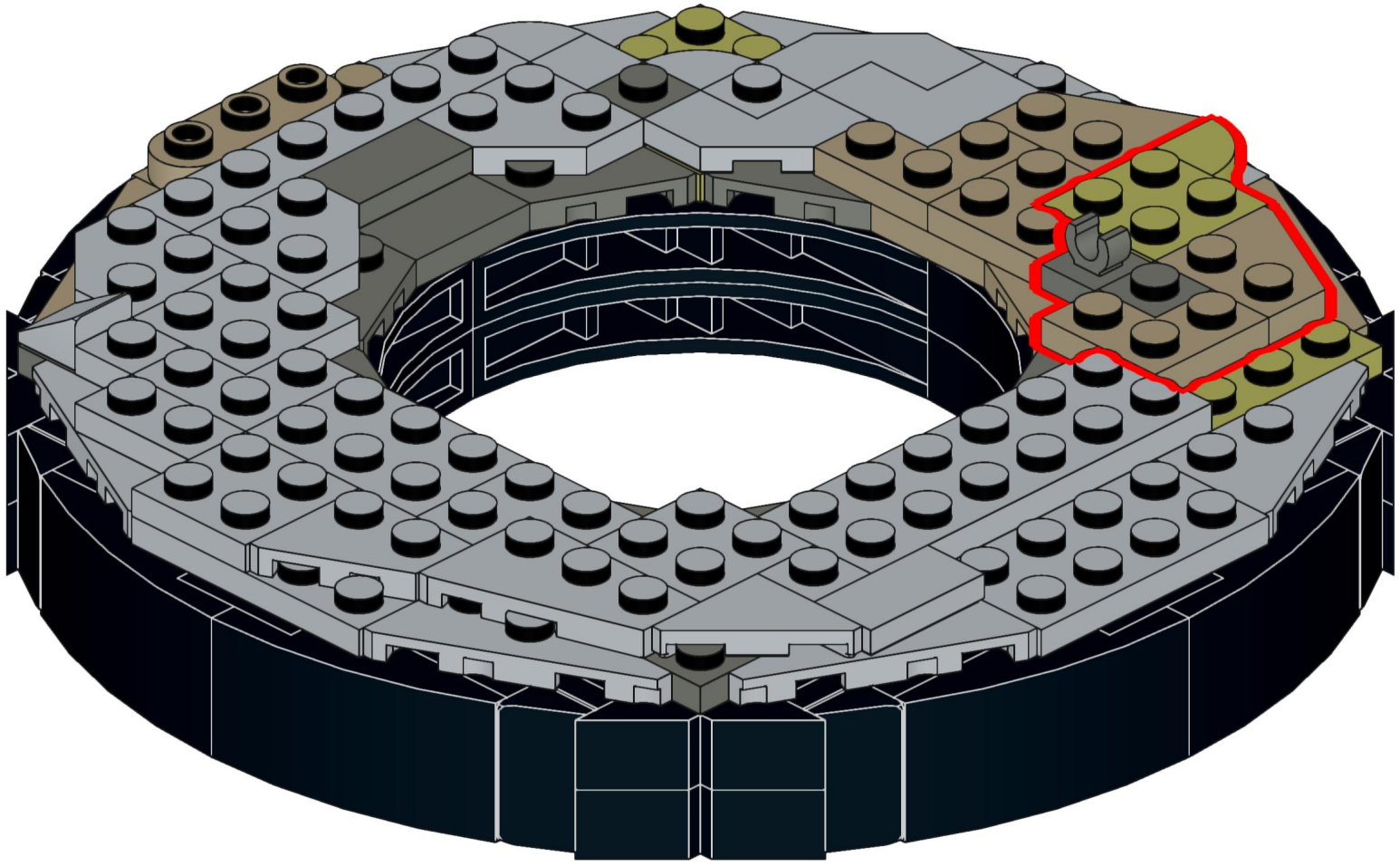

59

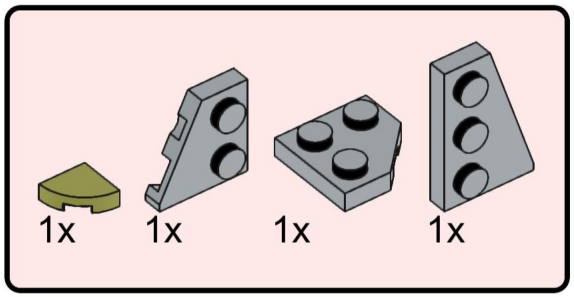

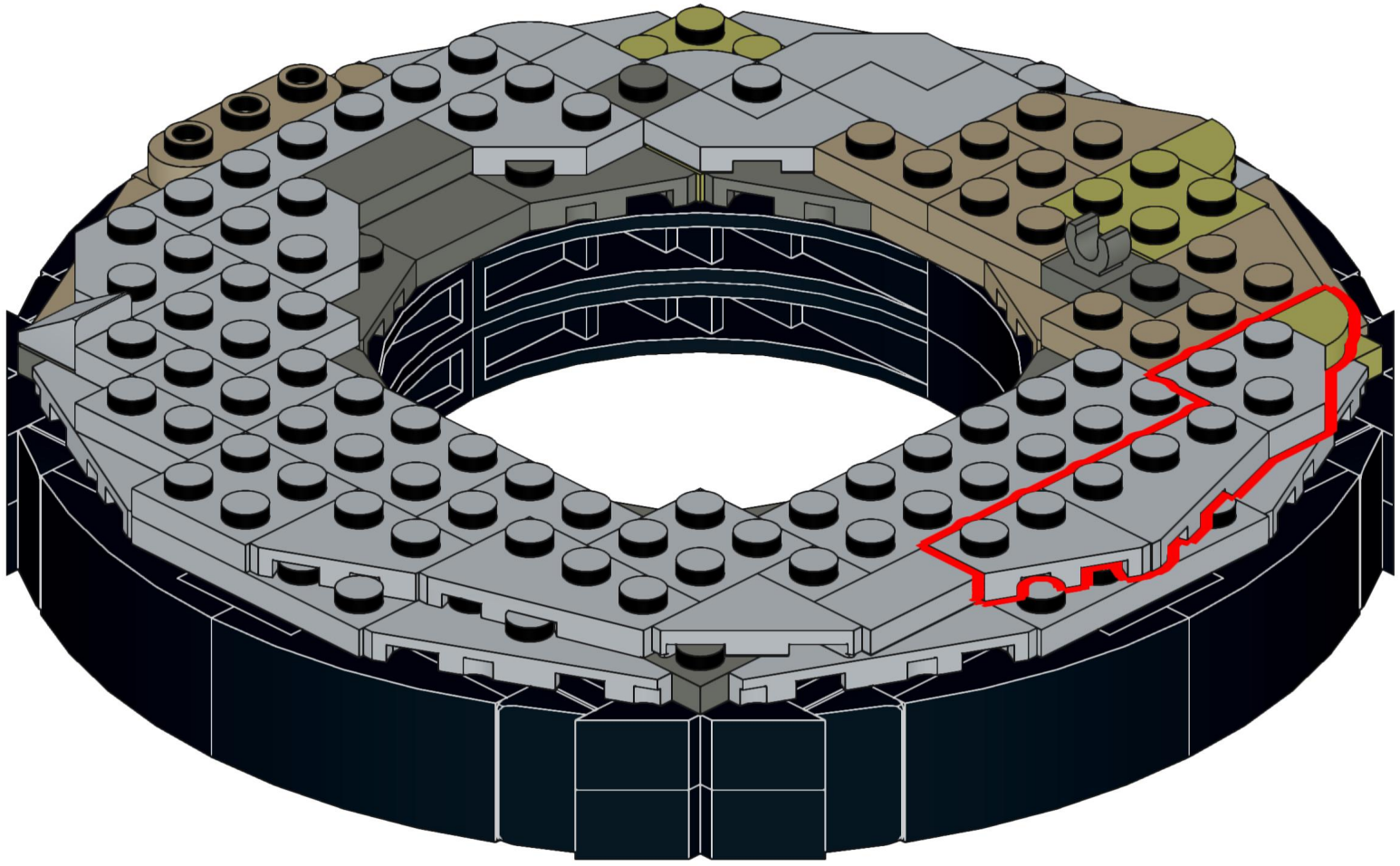

60

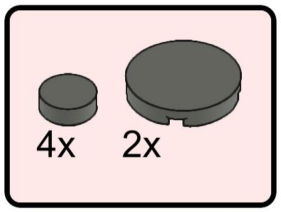

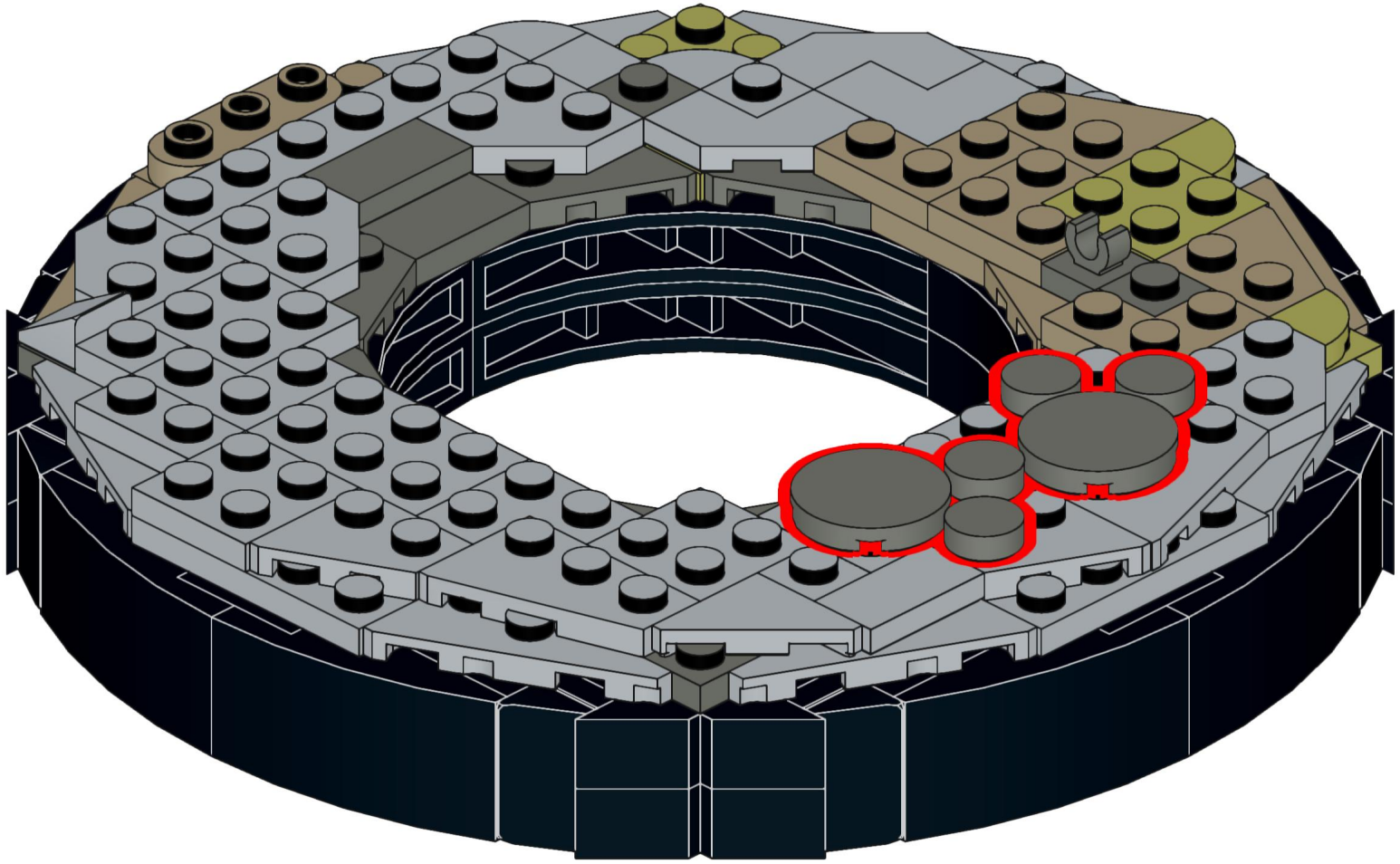

61

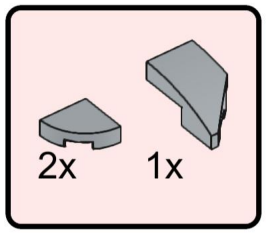

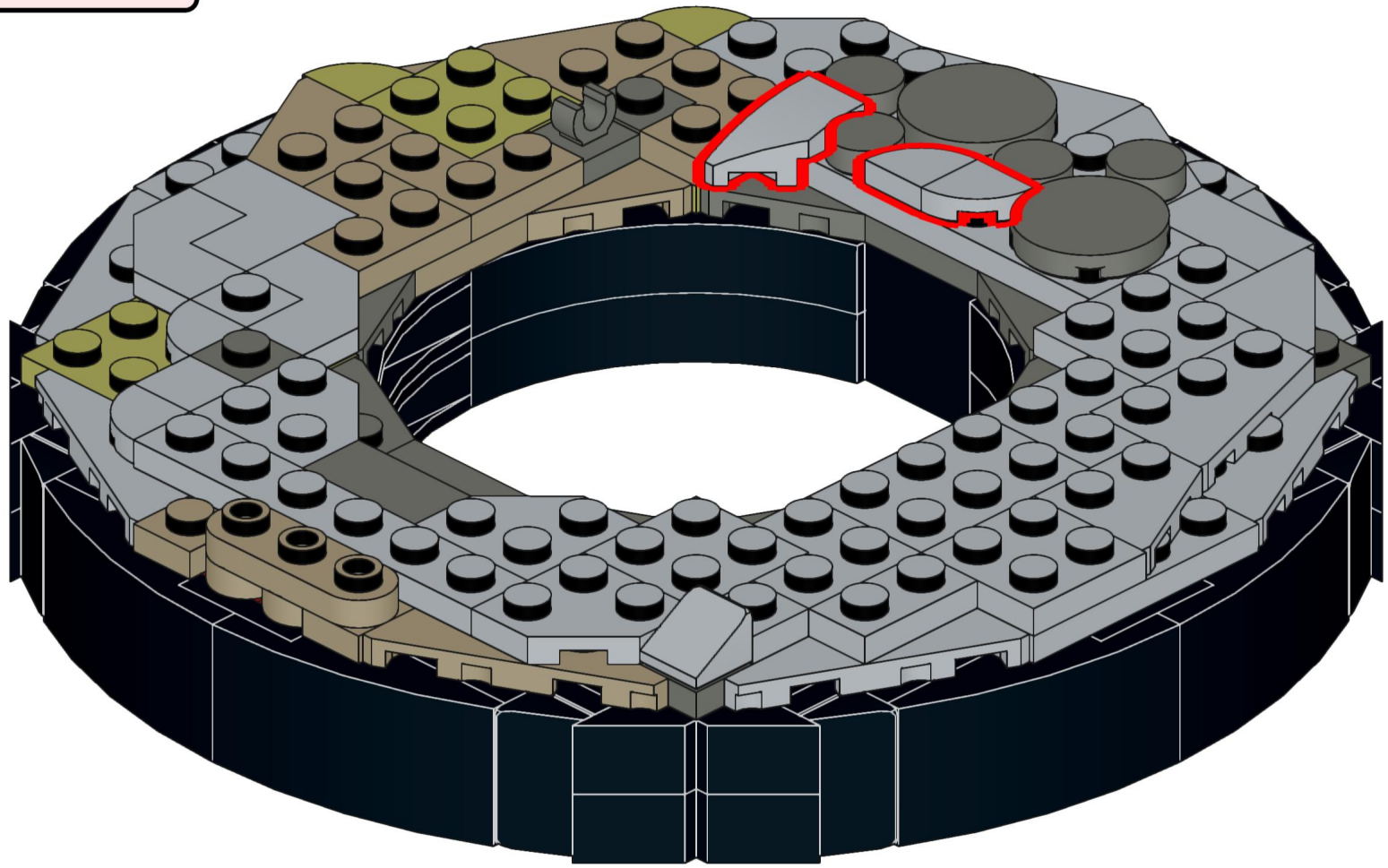

62

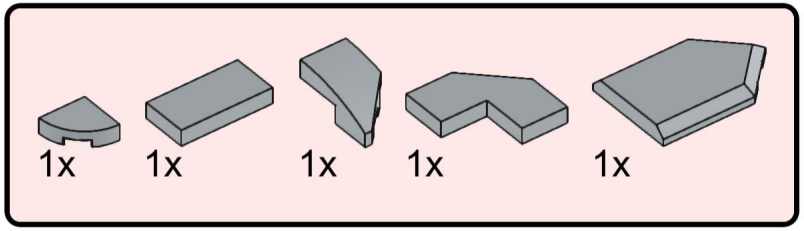

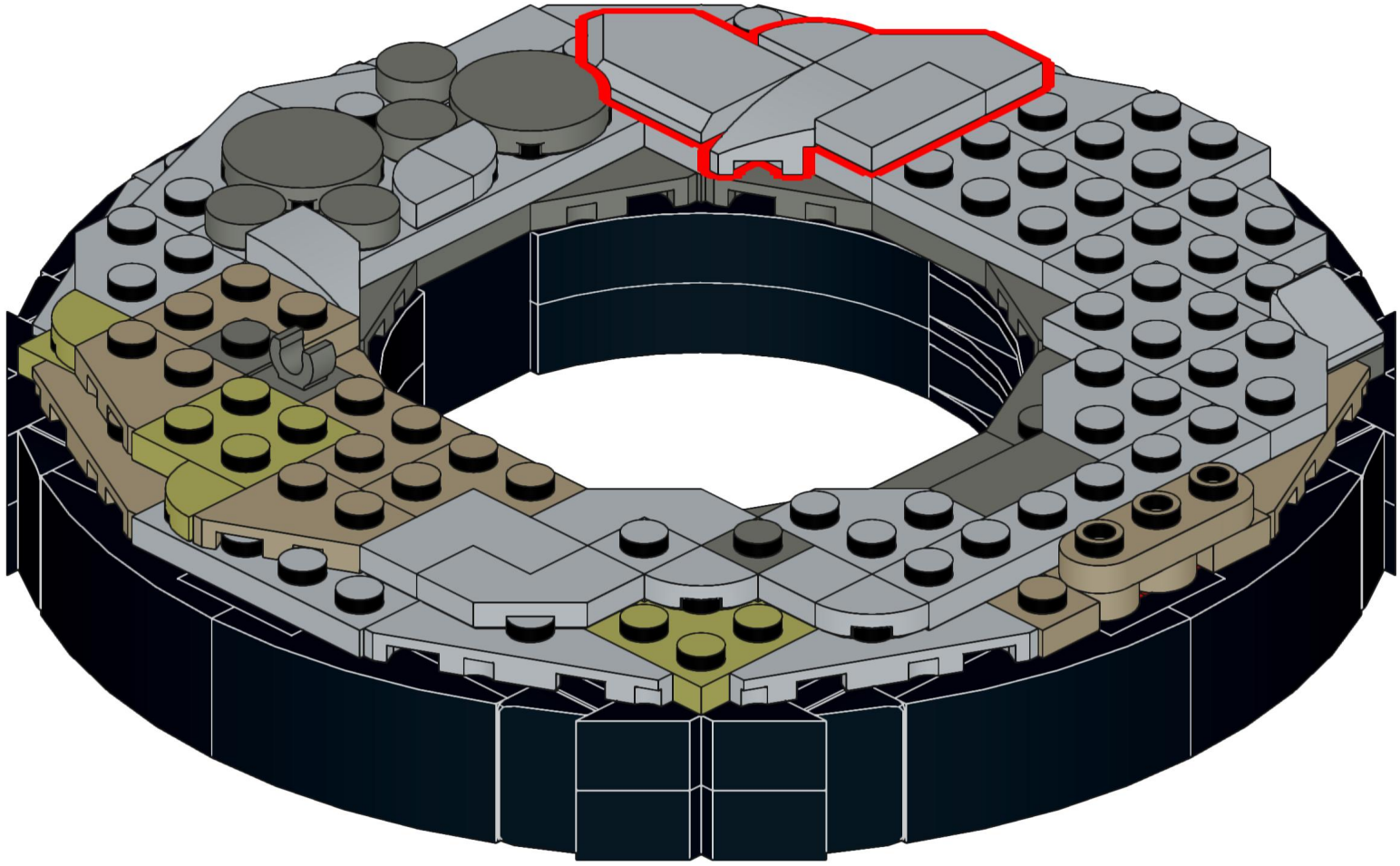

63

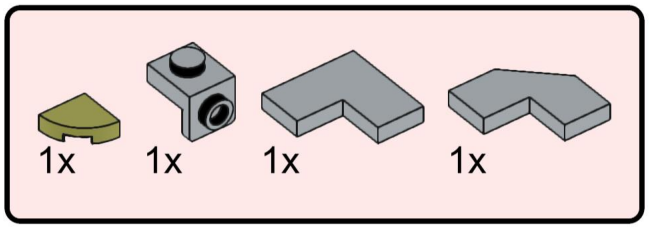

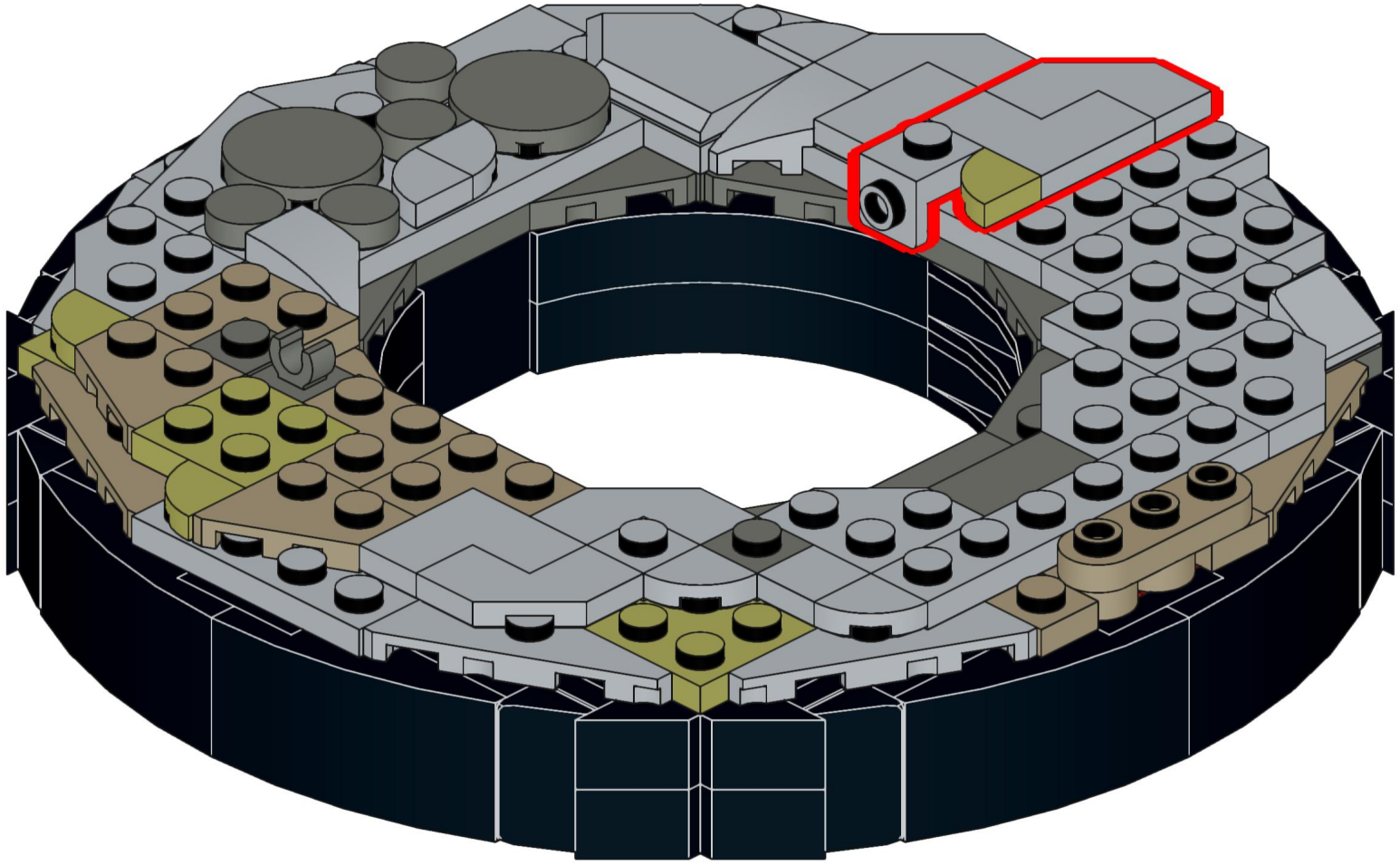

64

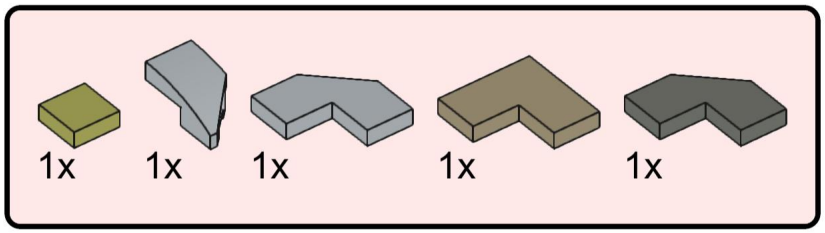

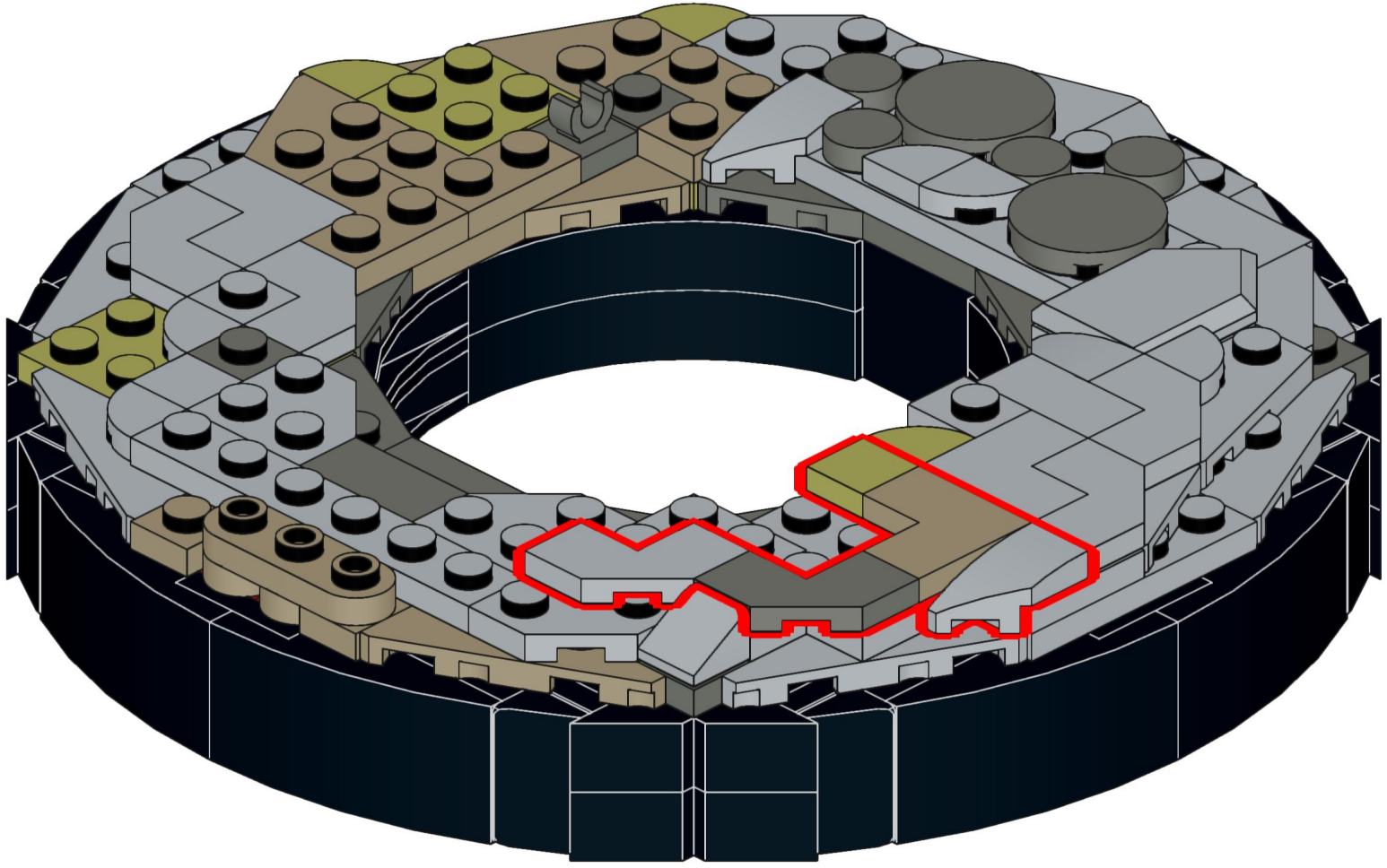

65

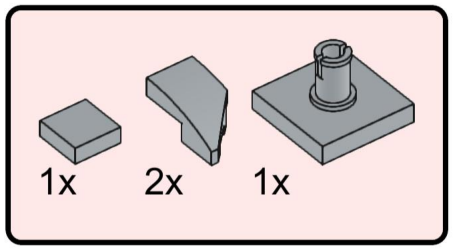

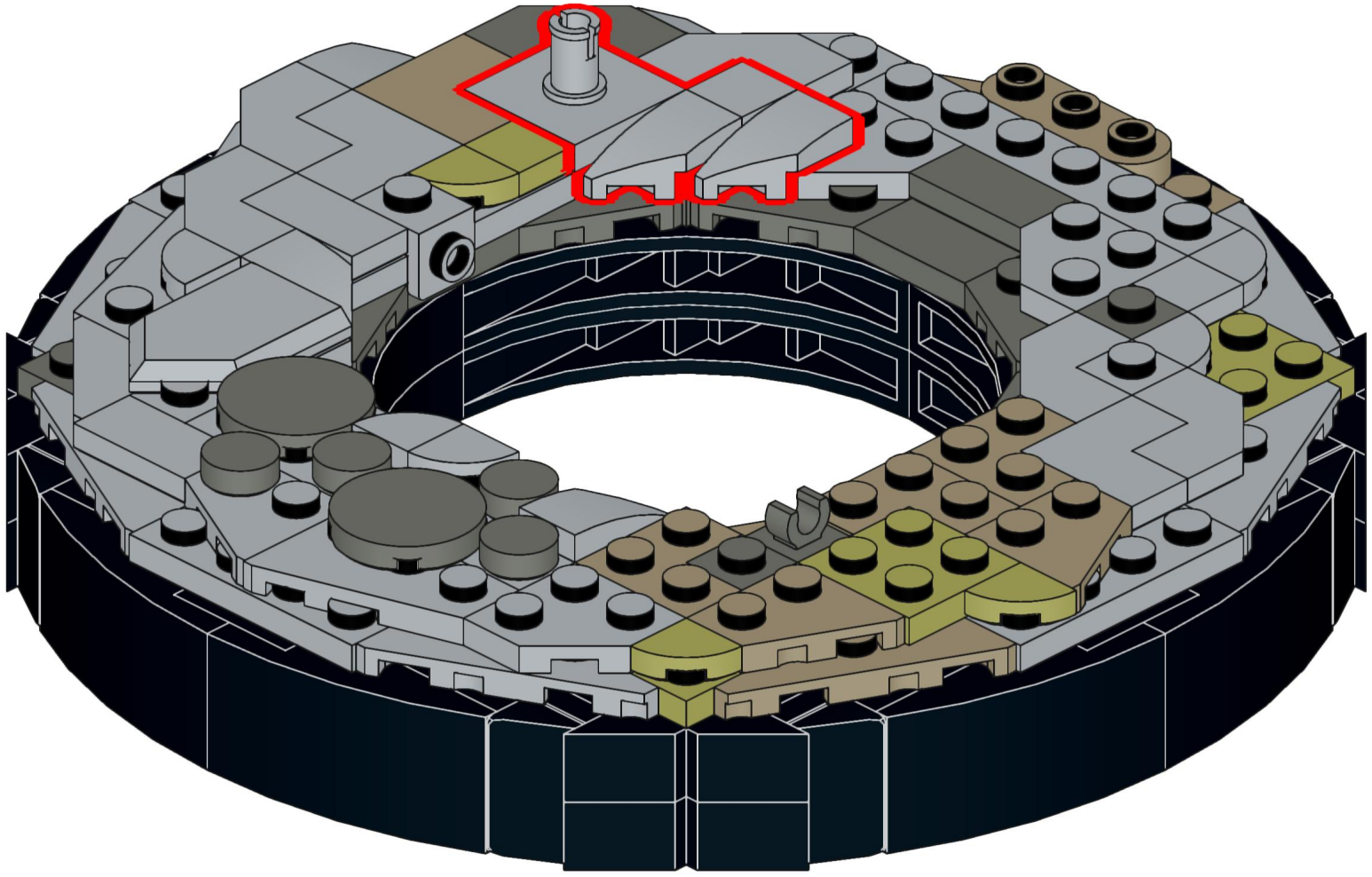

66



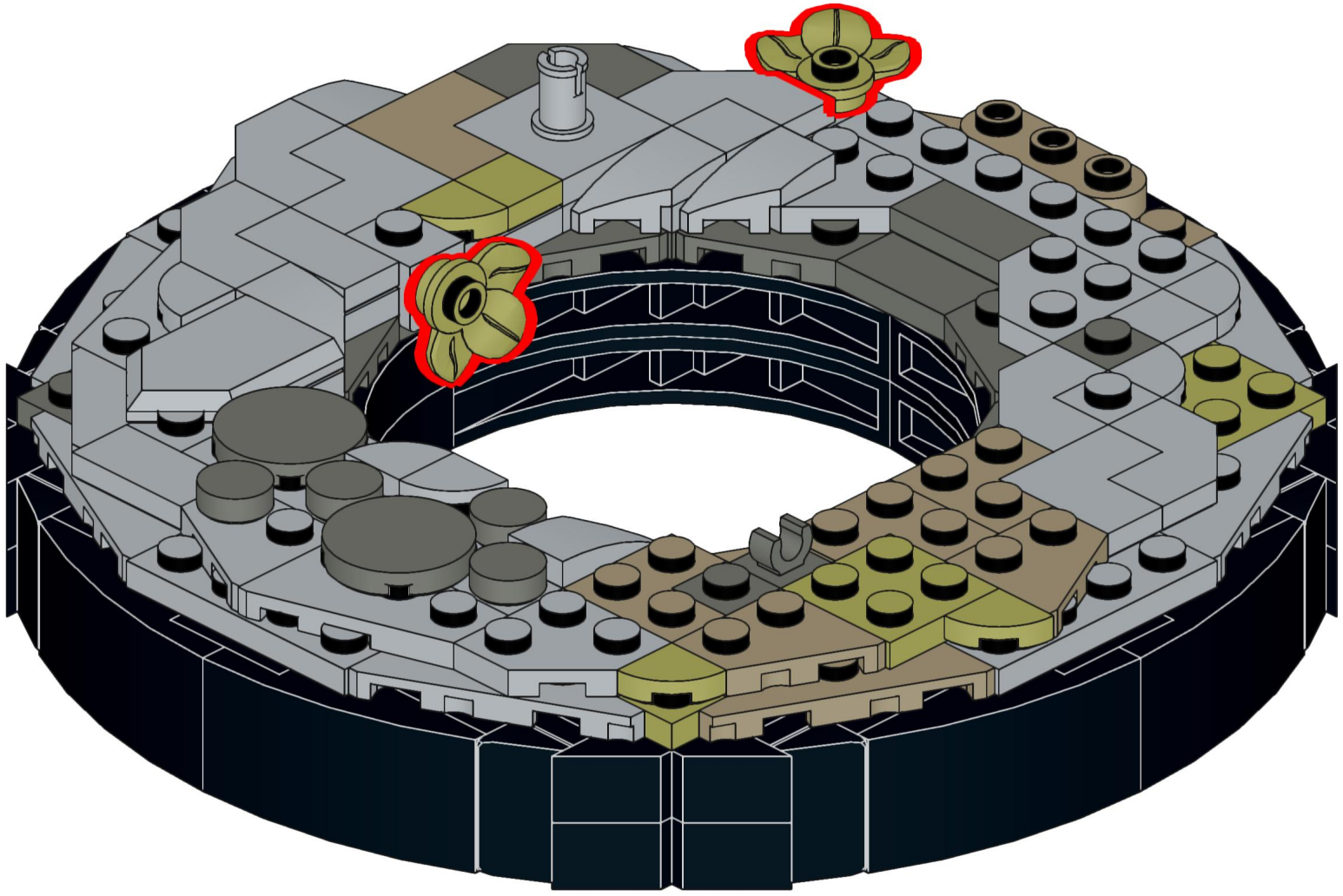

67

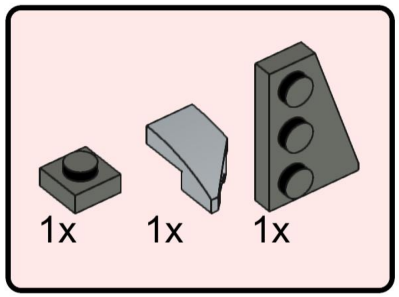

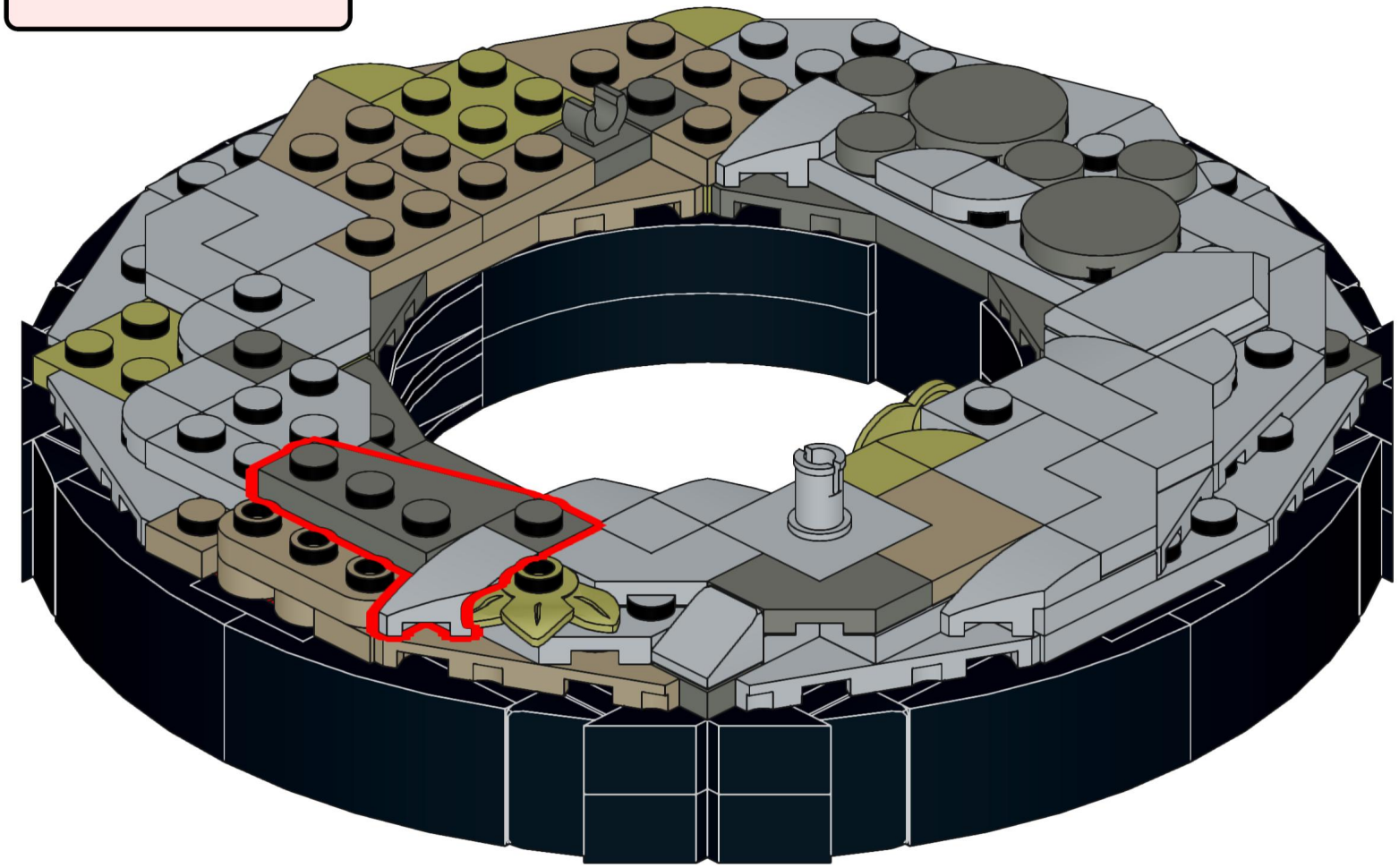

68

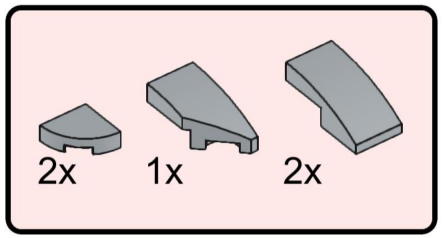

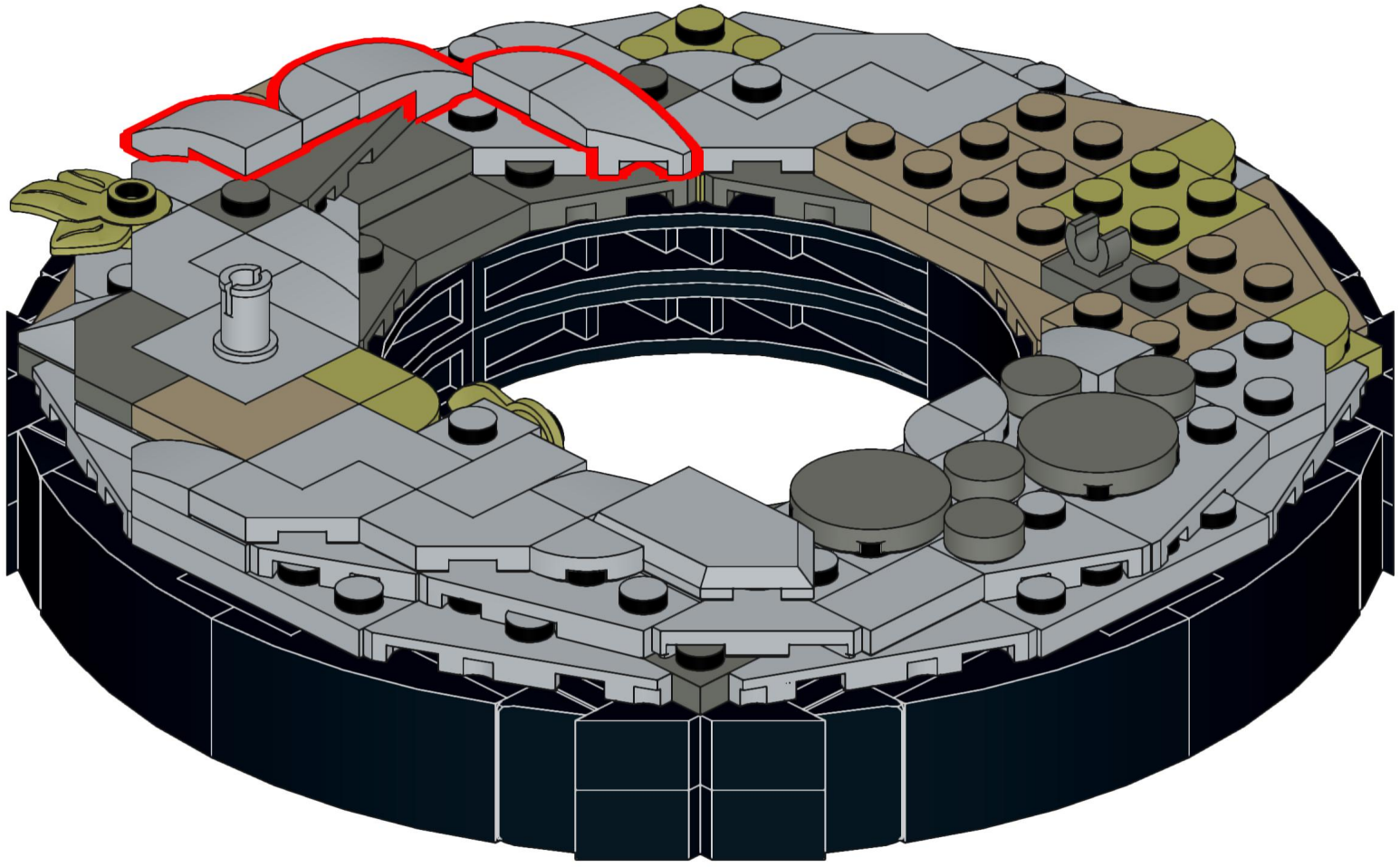

69

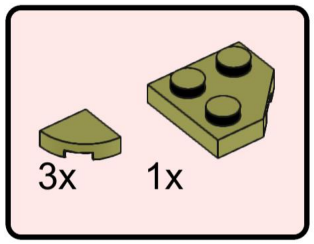

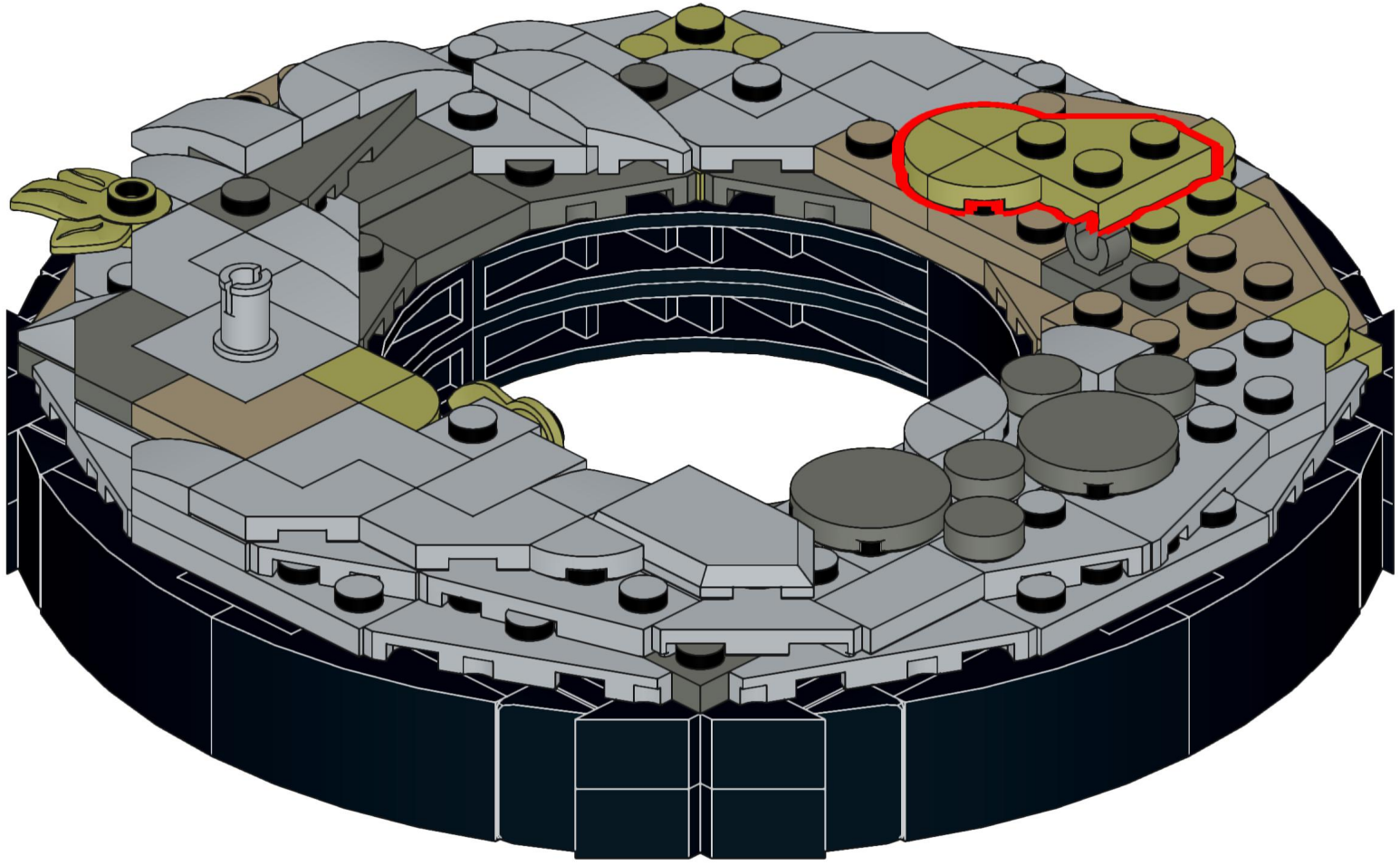

70

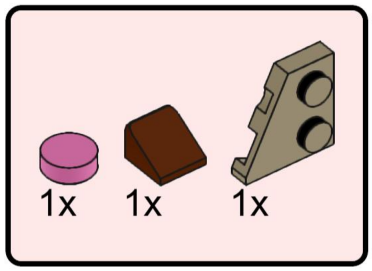

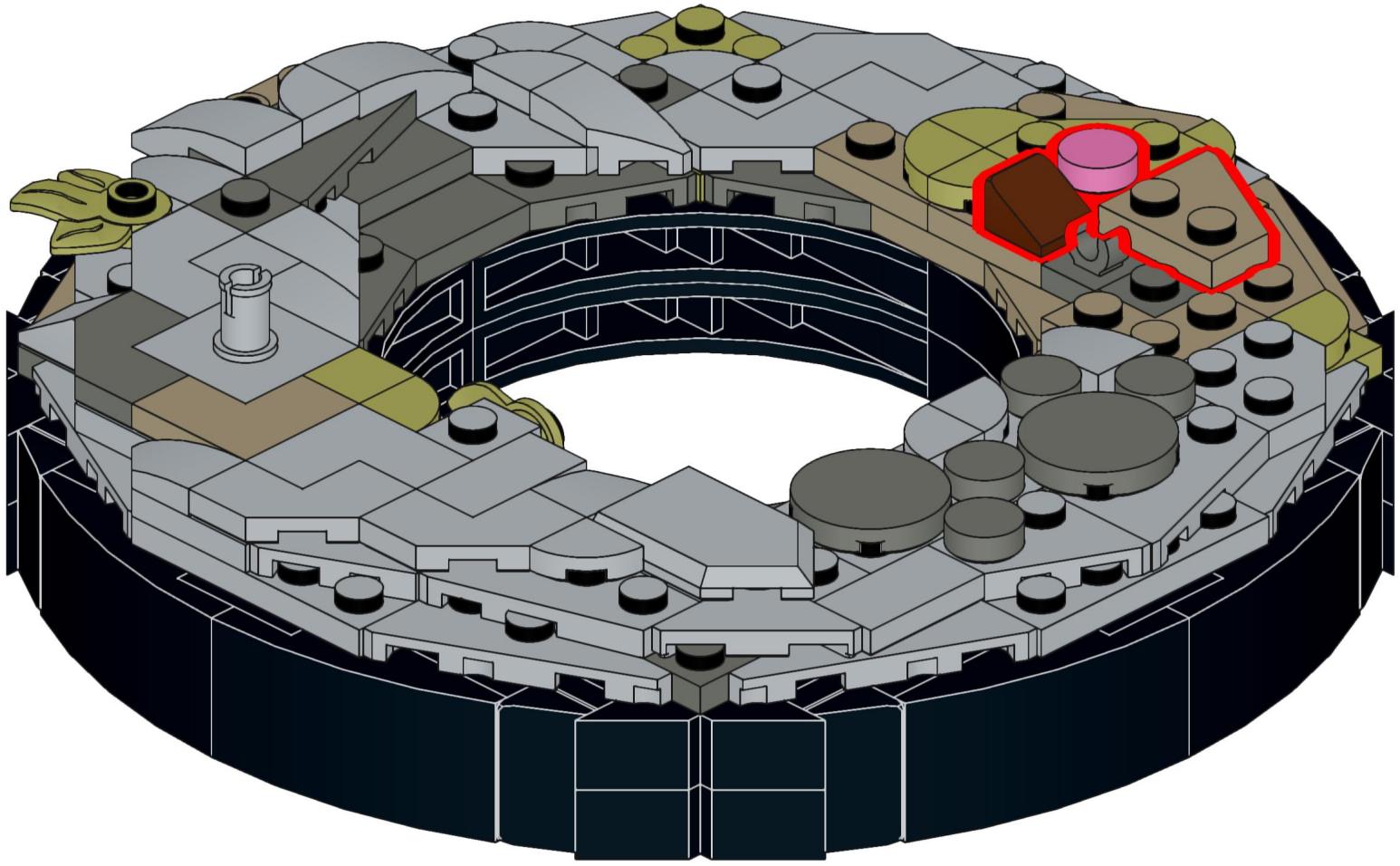

71

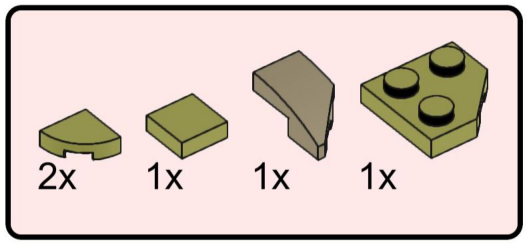

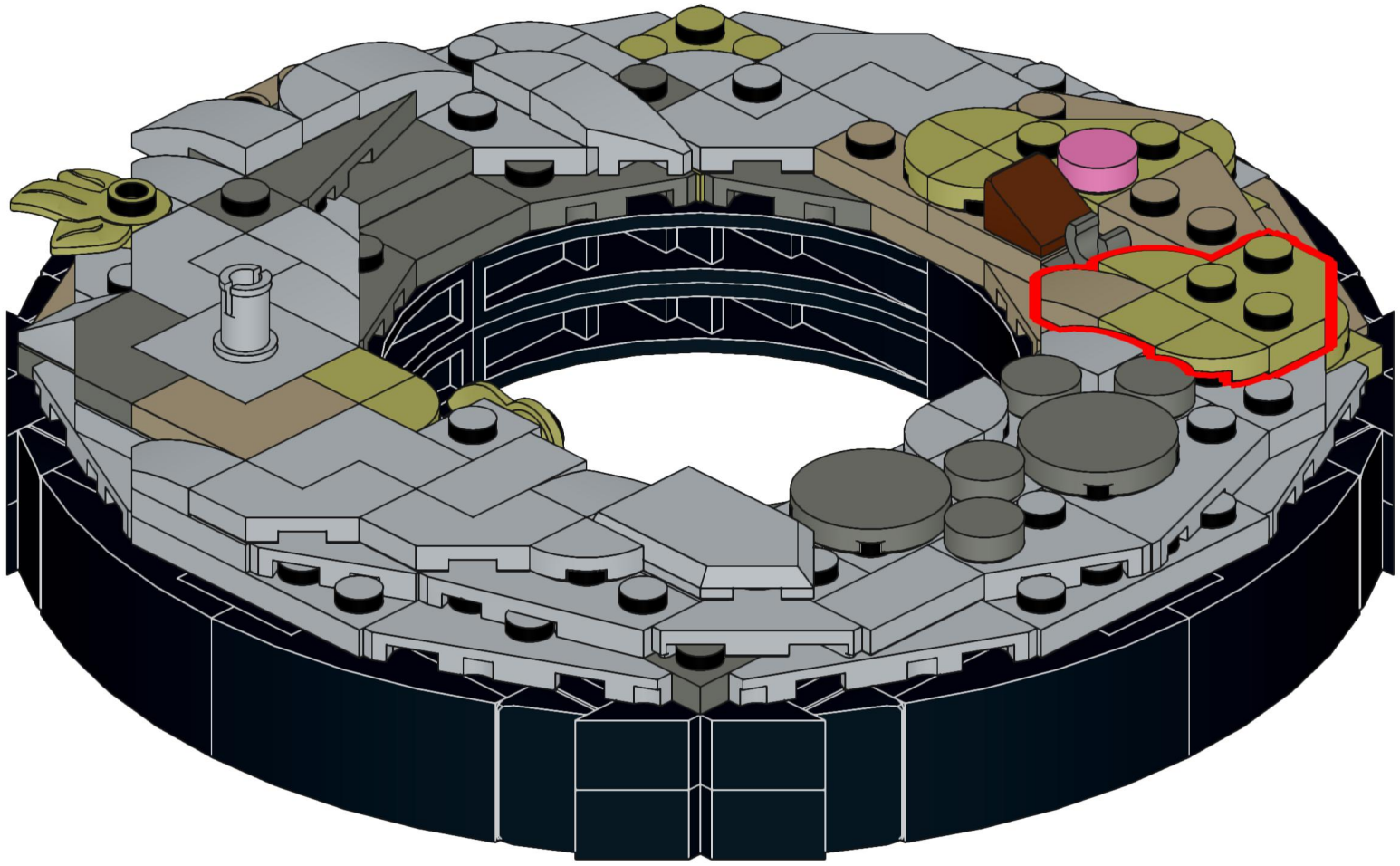

72

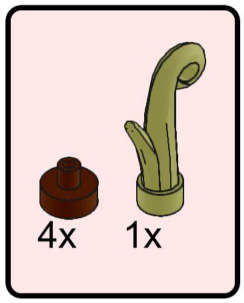

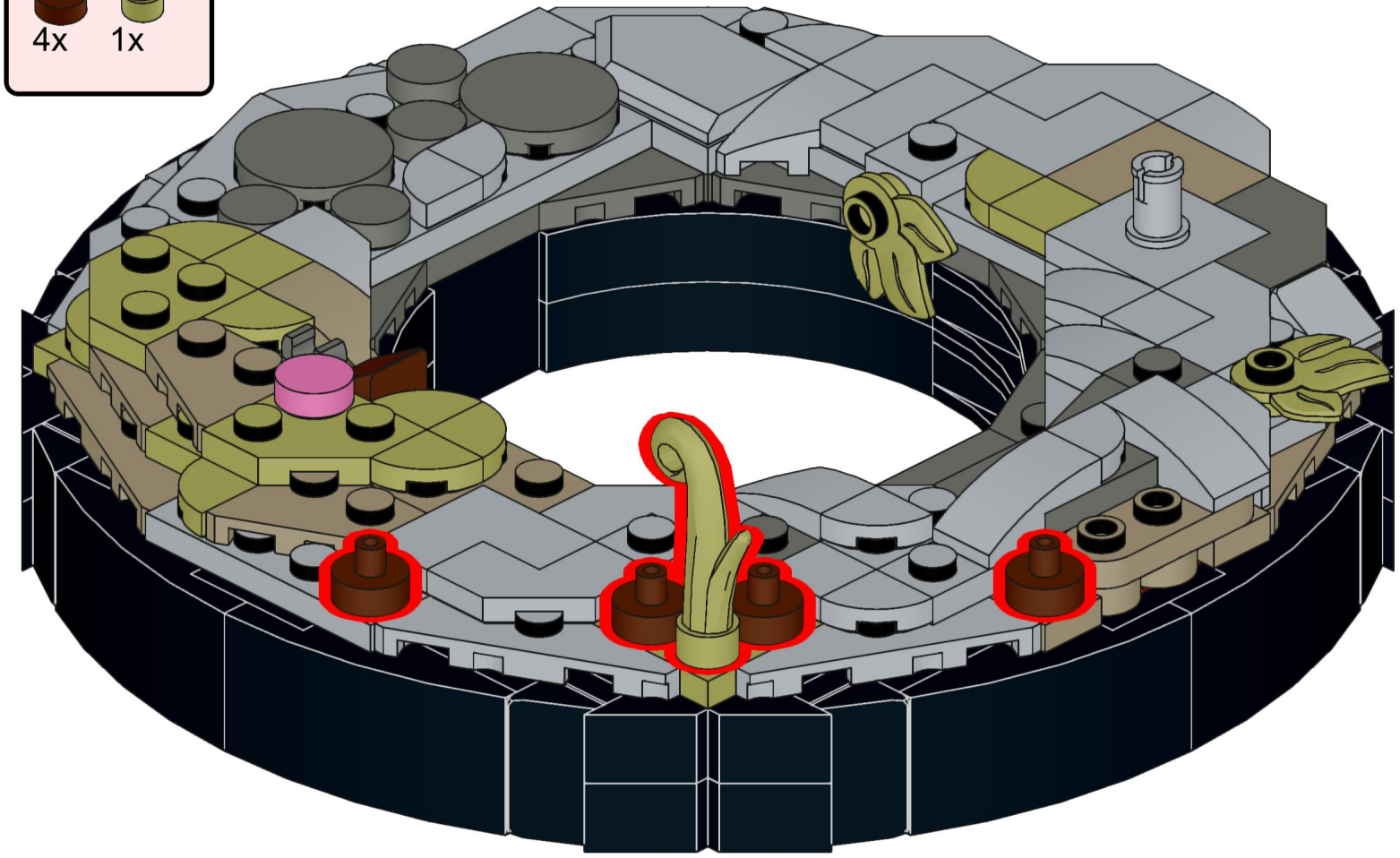

73

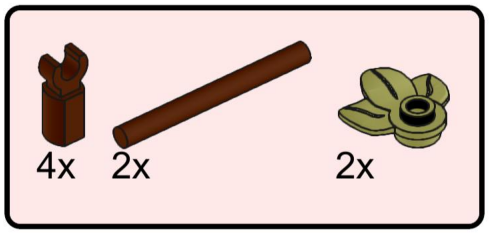

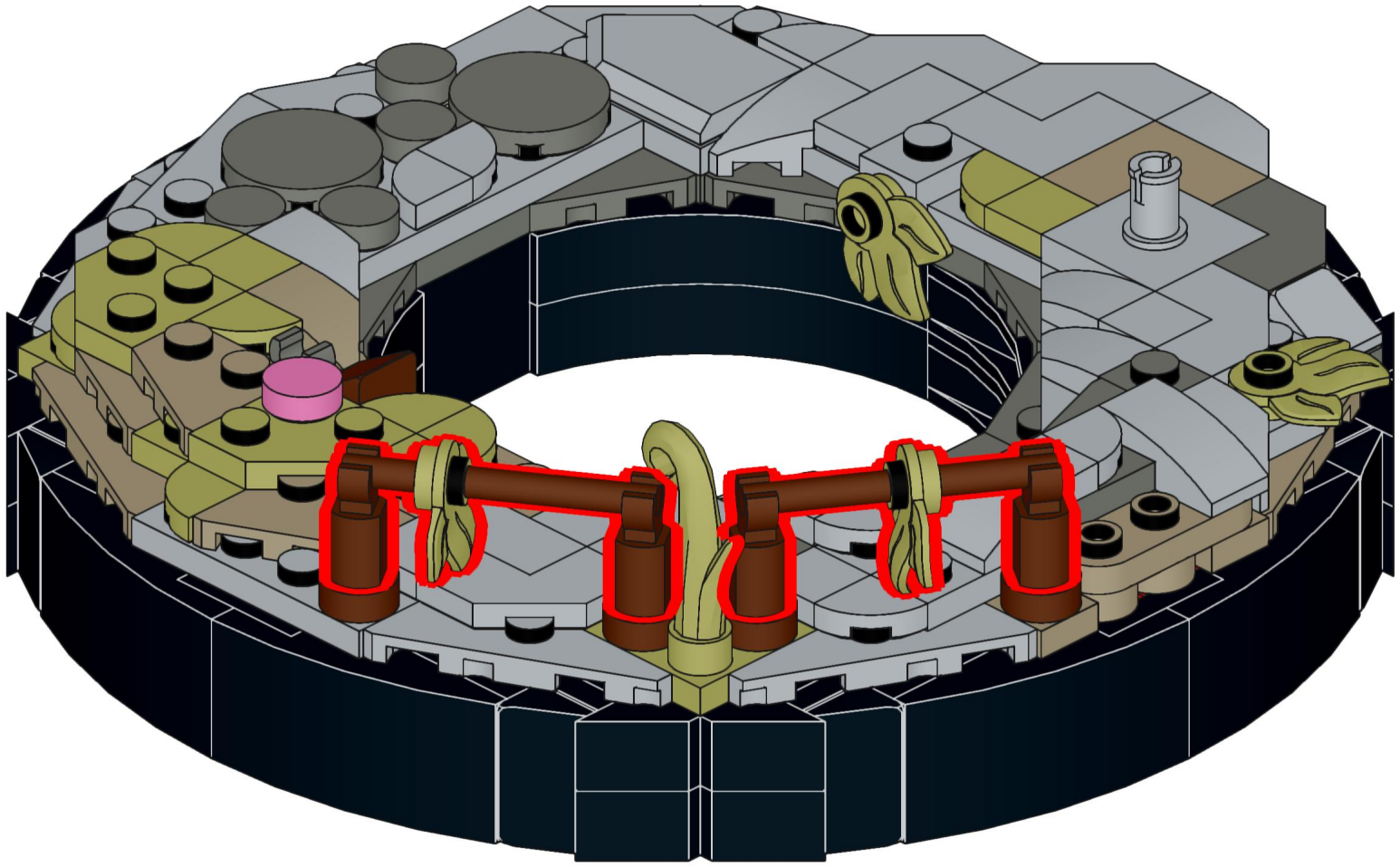

74

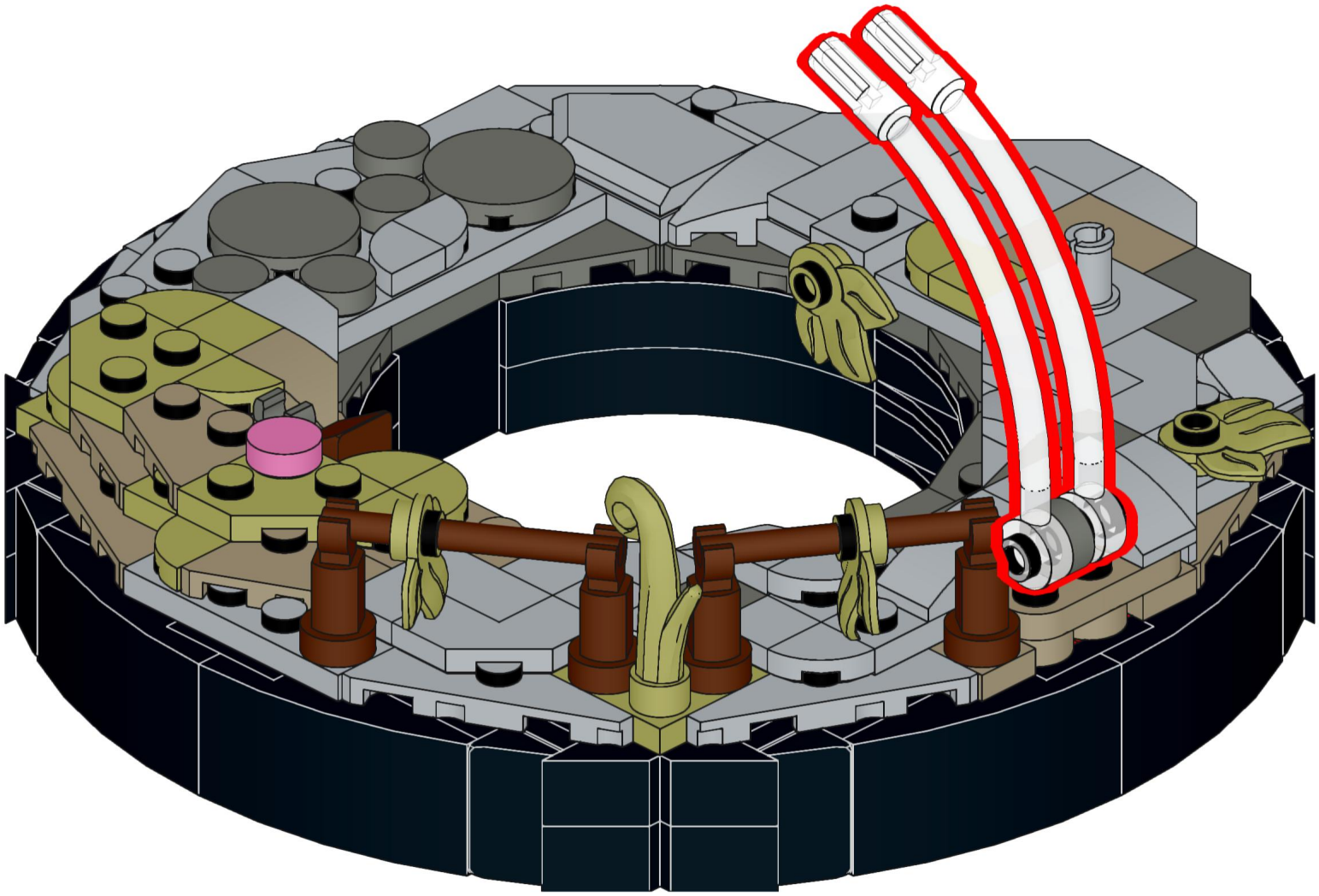

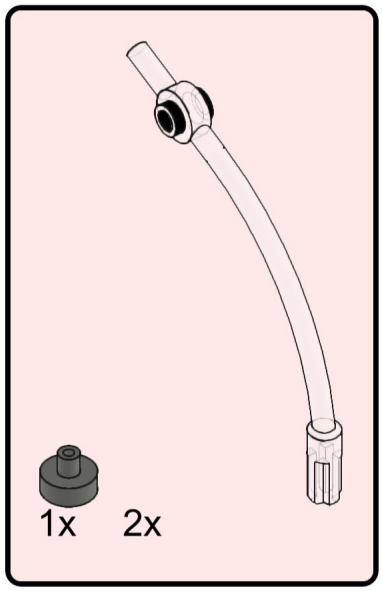

75

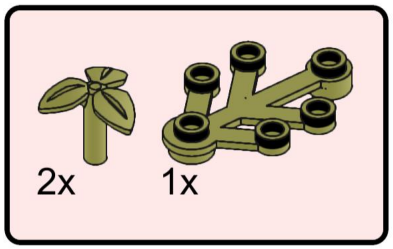

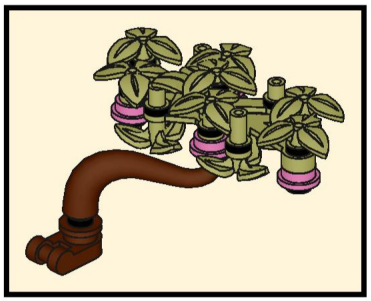

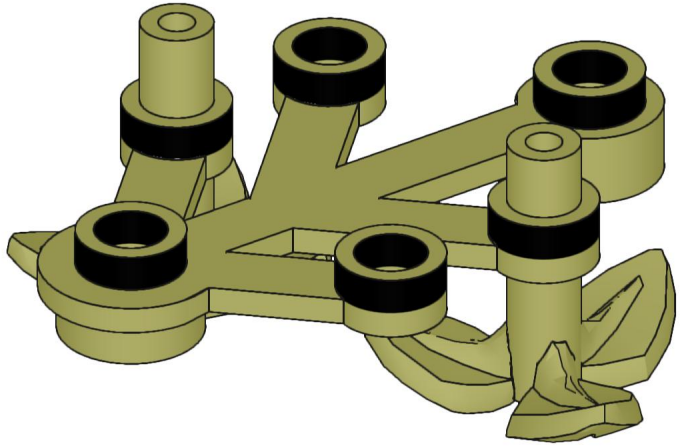

76

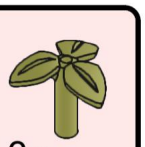

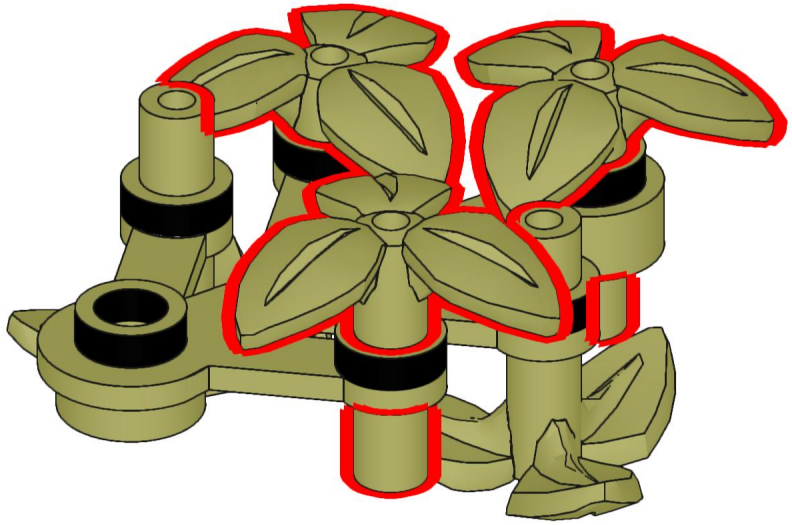

77

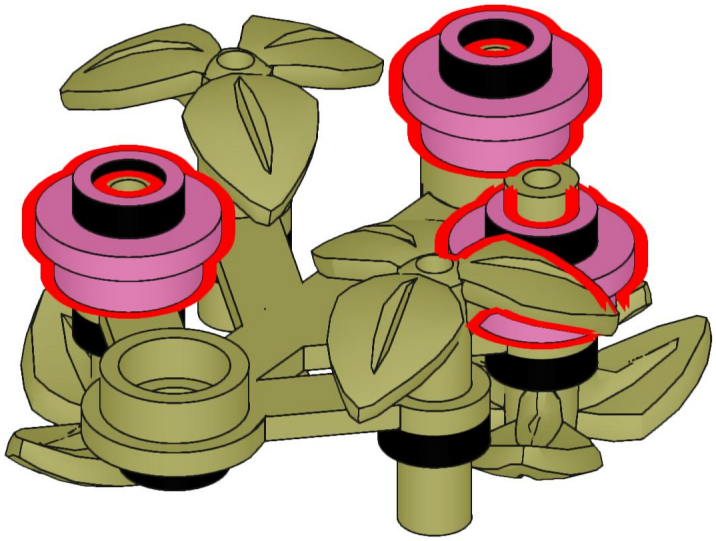

78

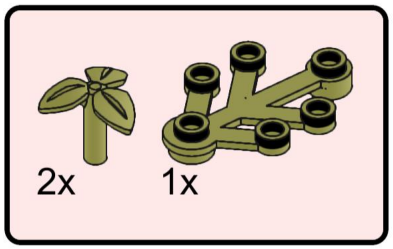

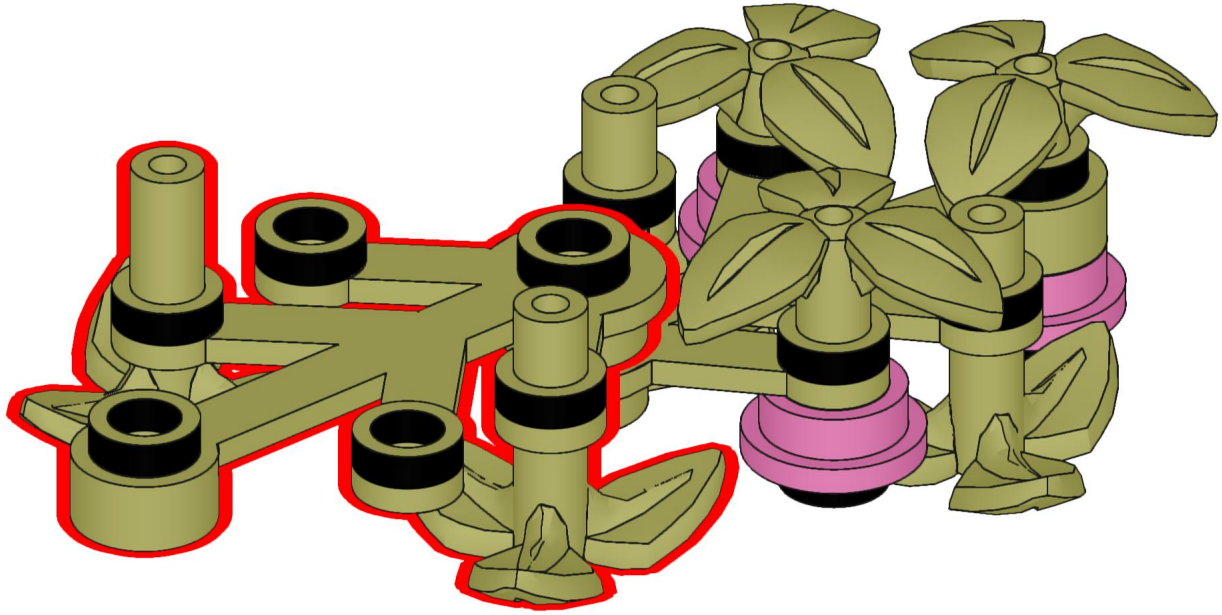

79

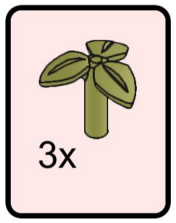

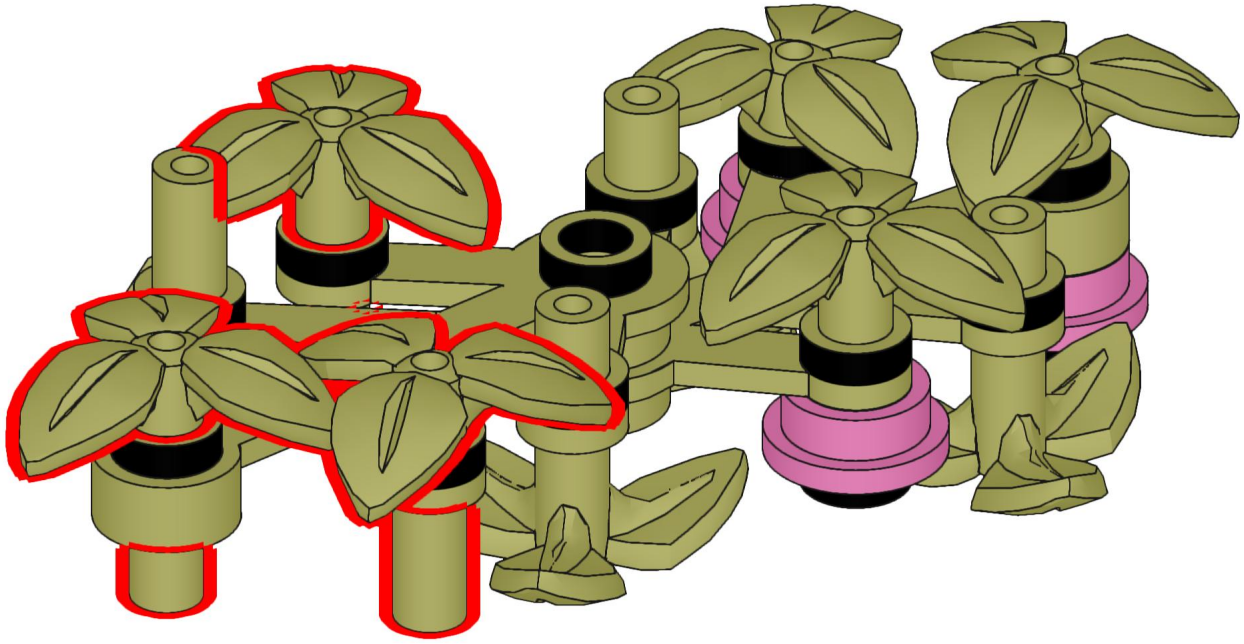

80

3x

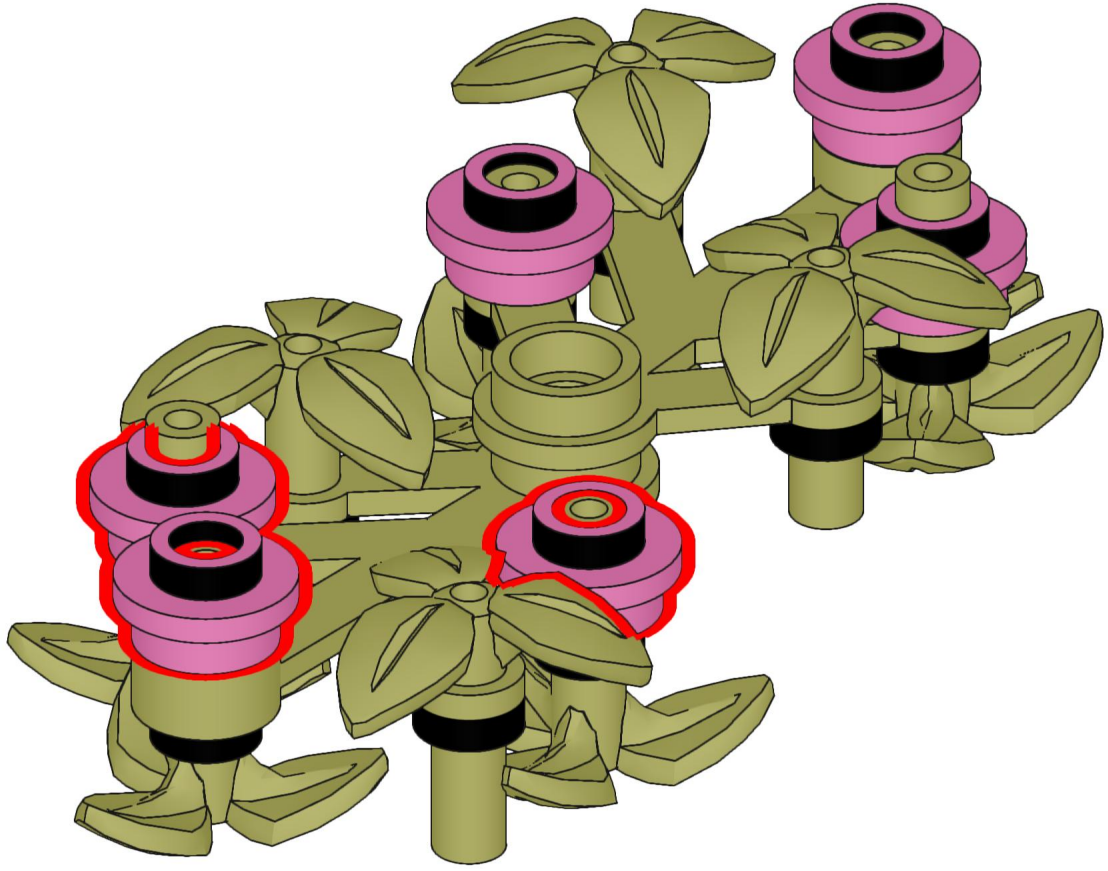

81

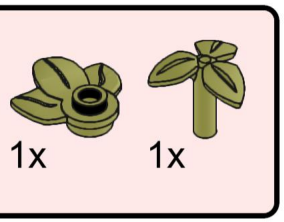

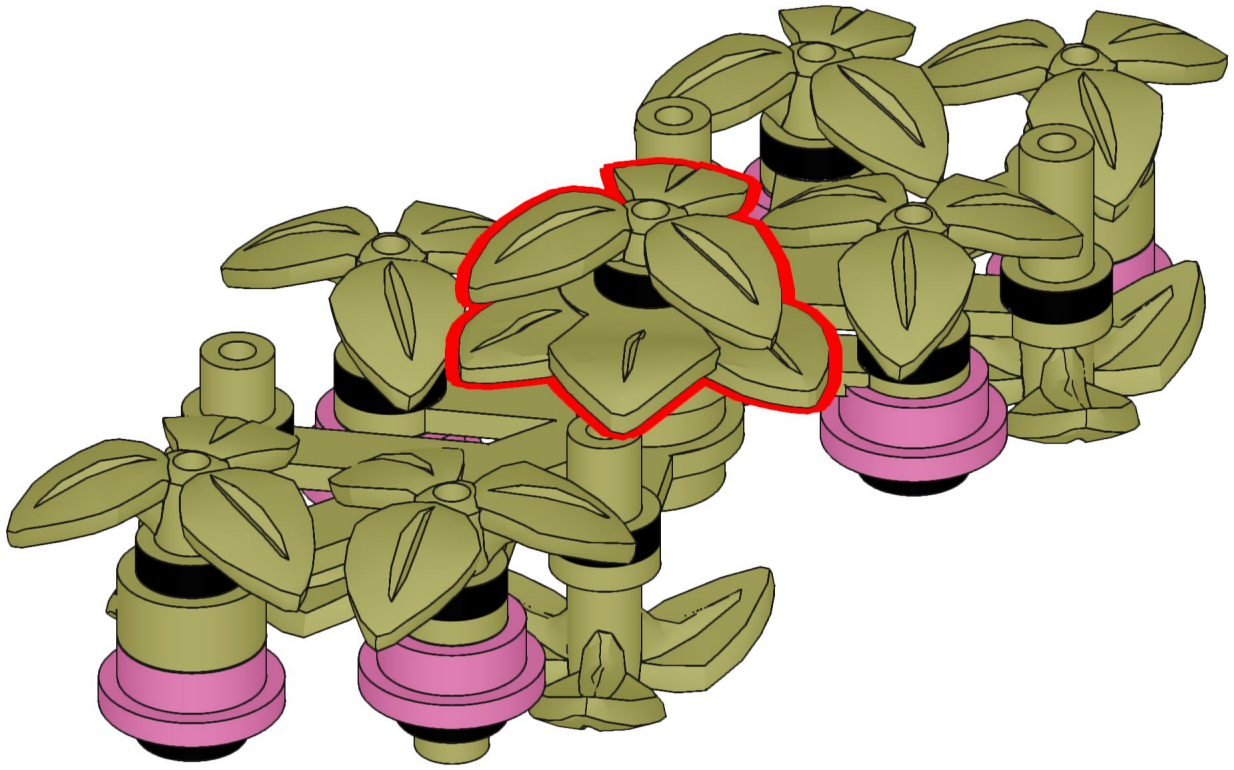

82

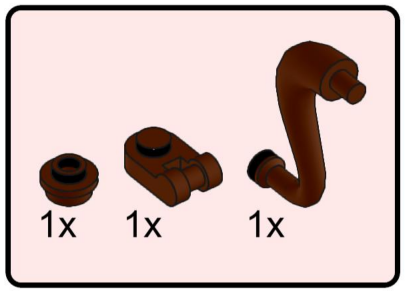

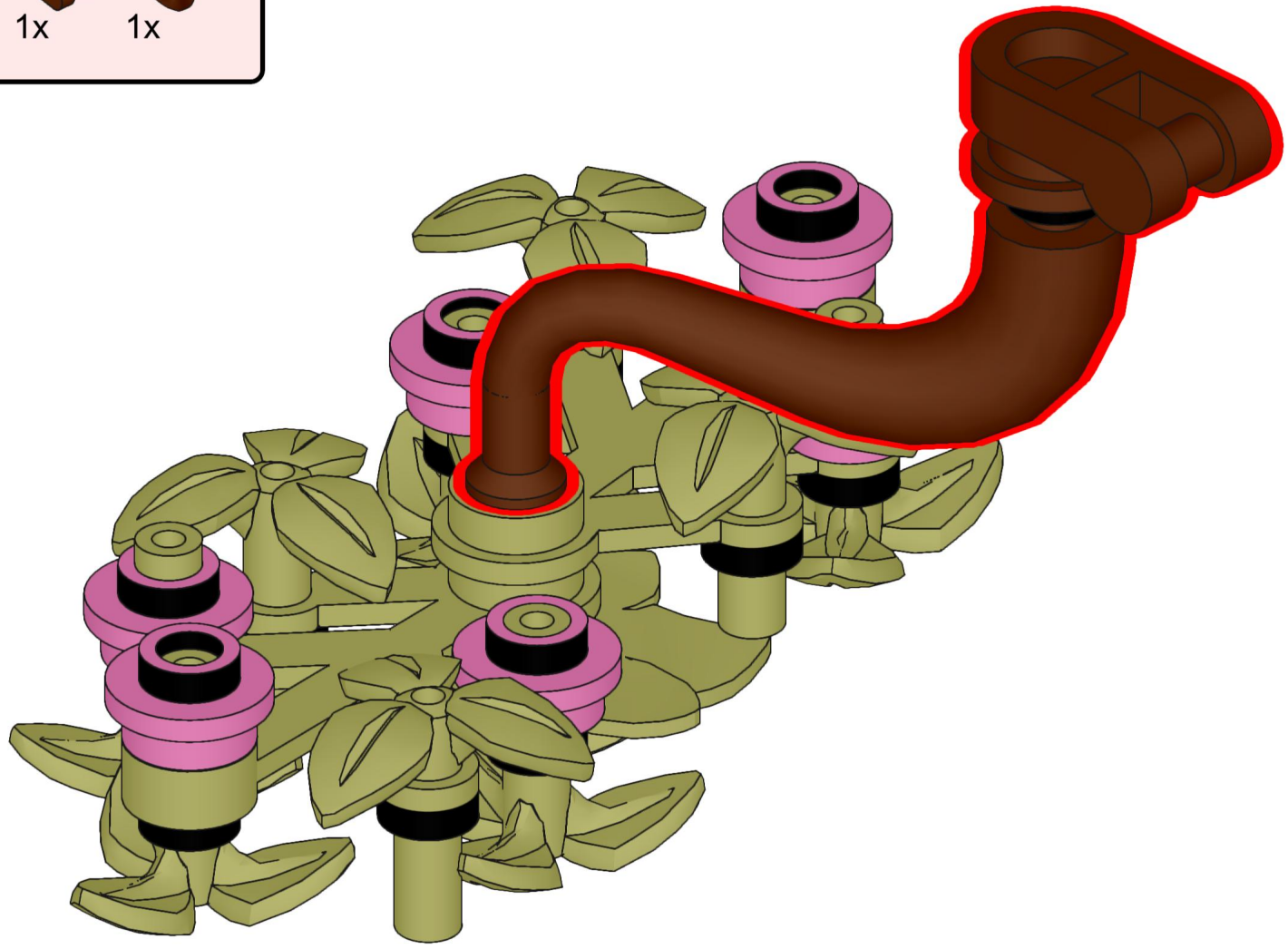

83

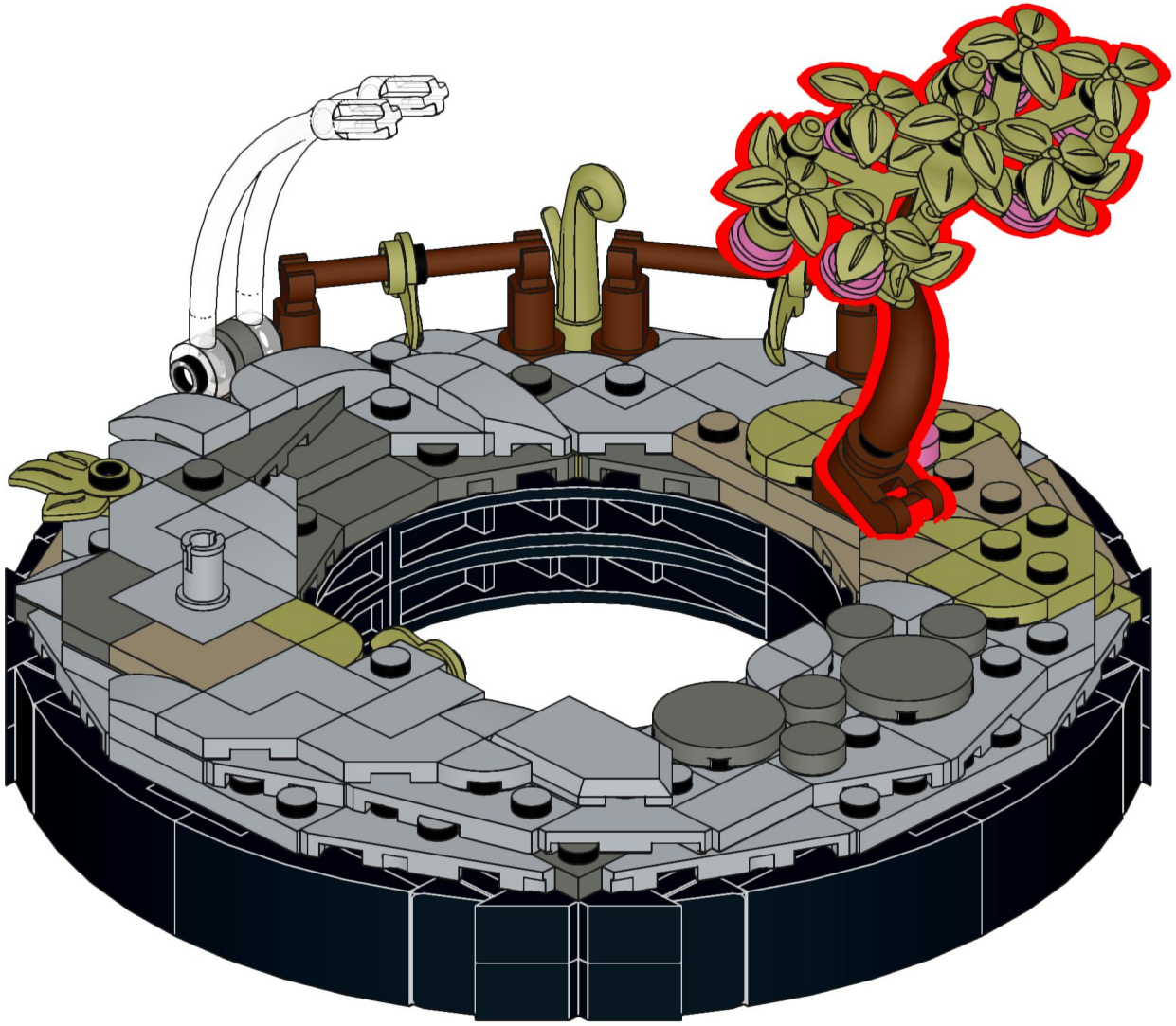

84

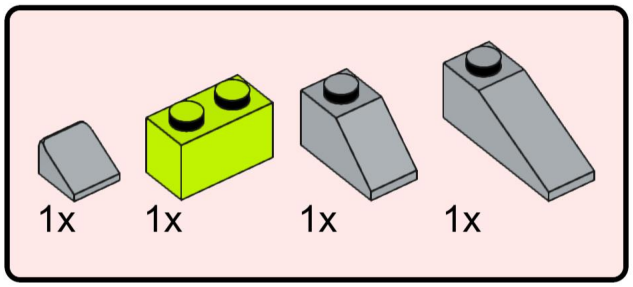

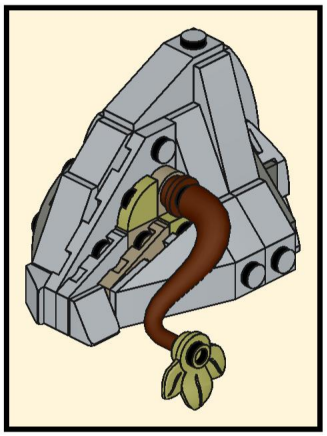

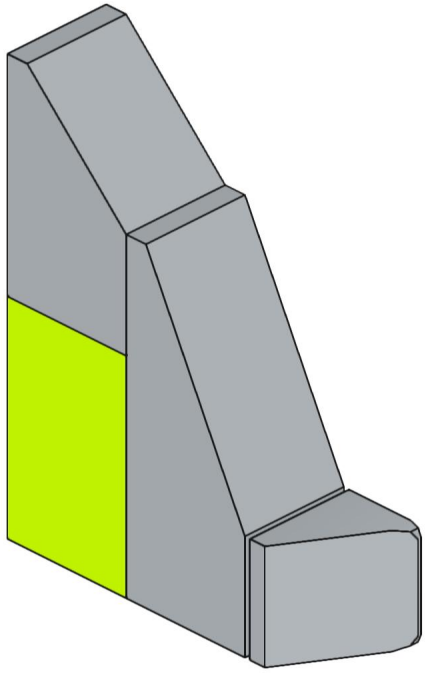

85

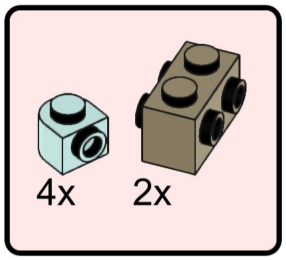

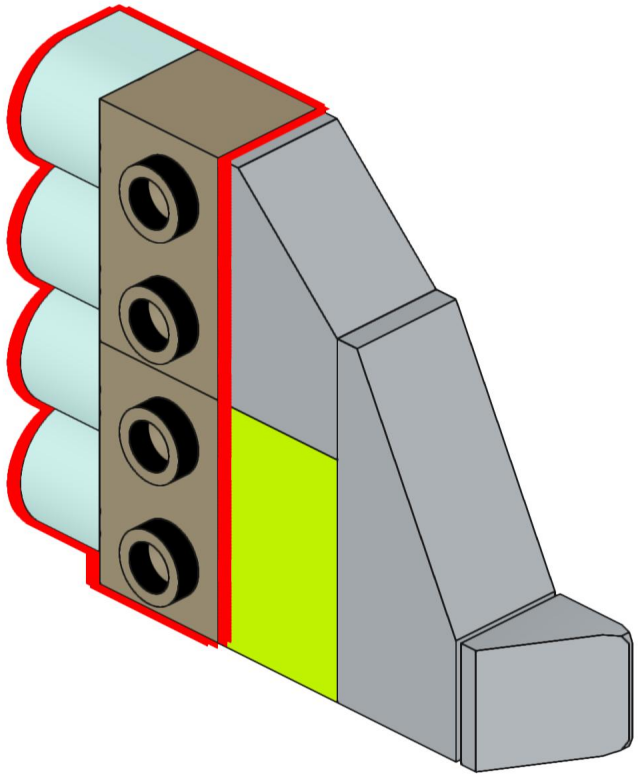

86

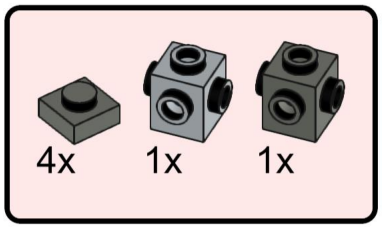

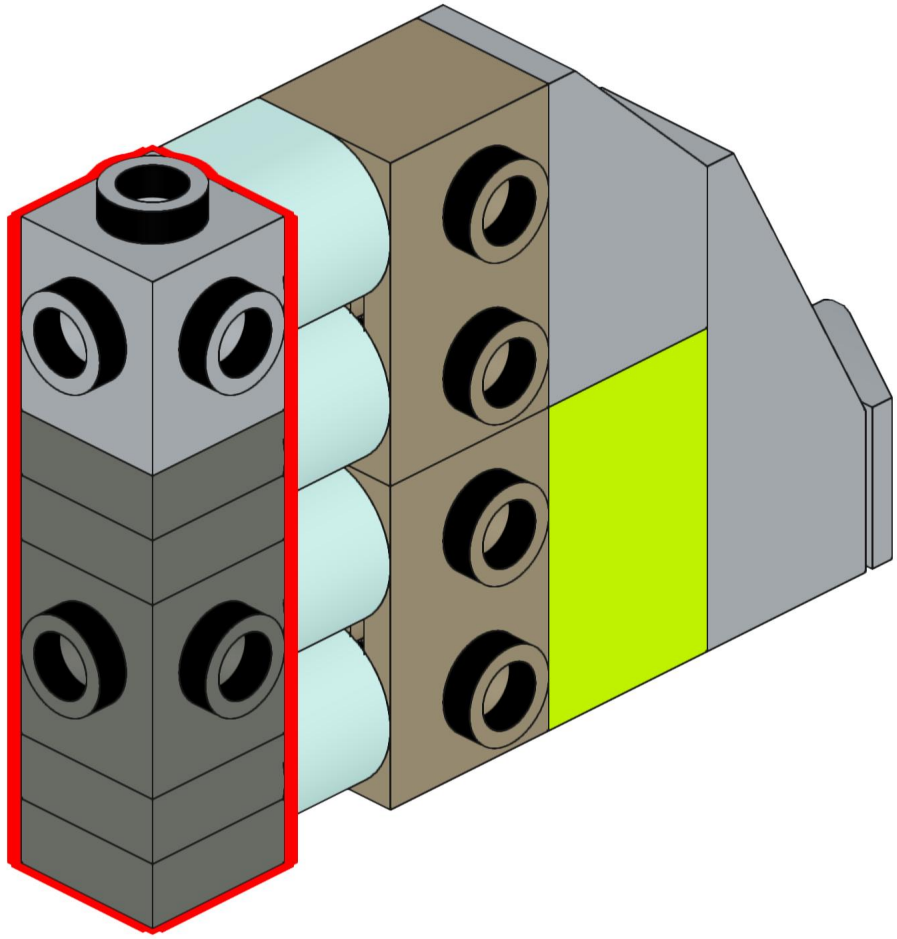

87

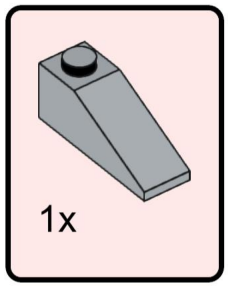

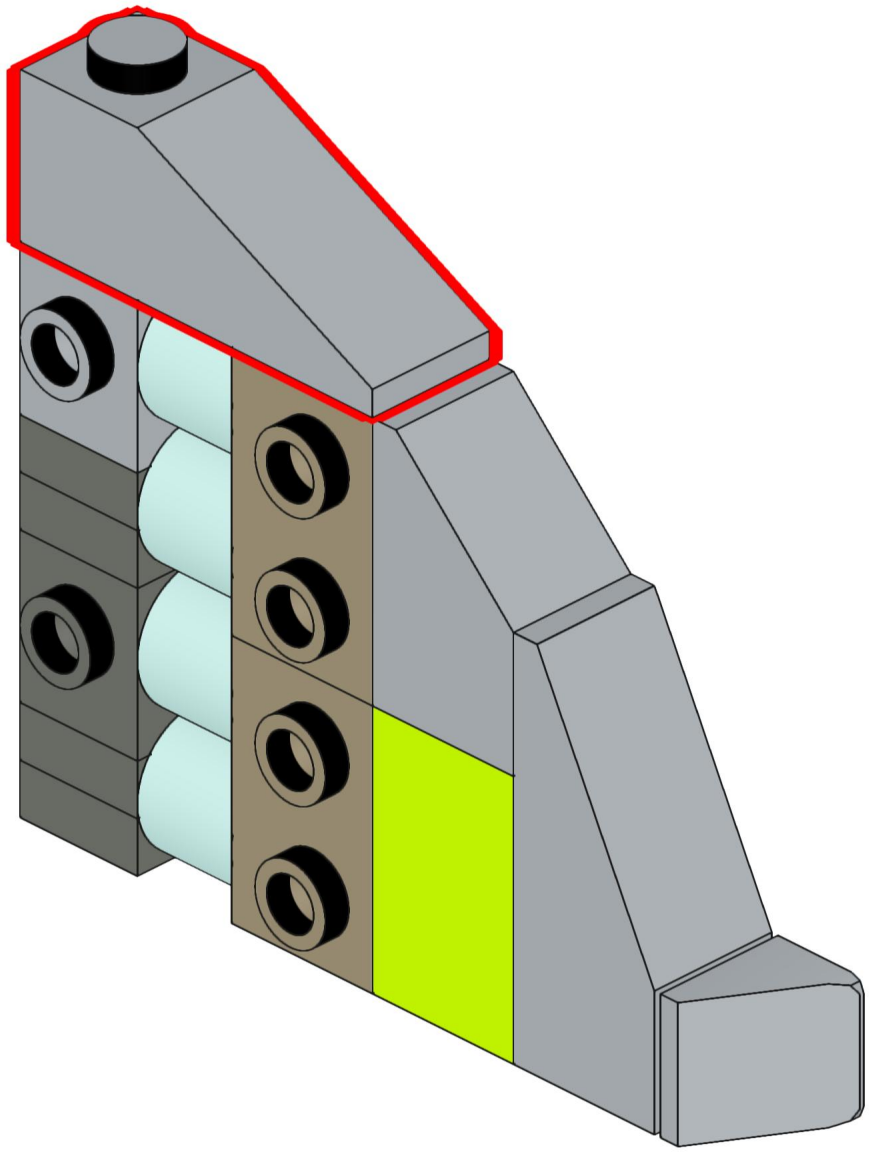

88

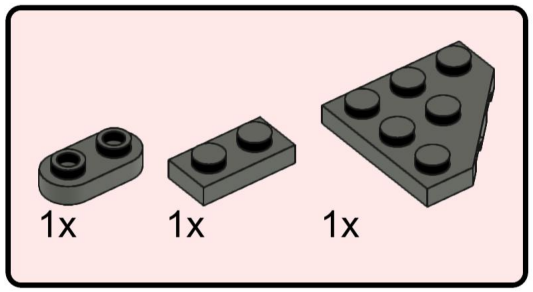

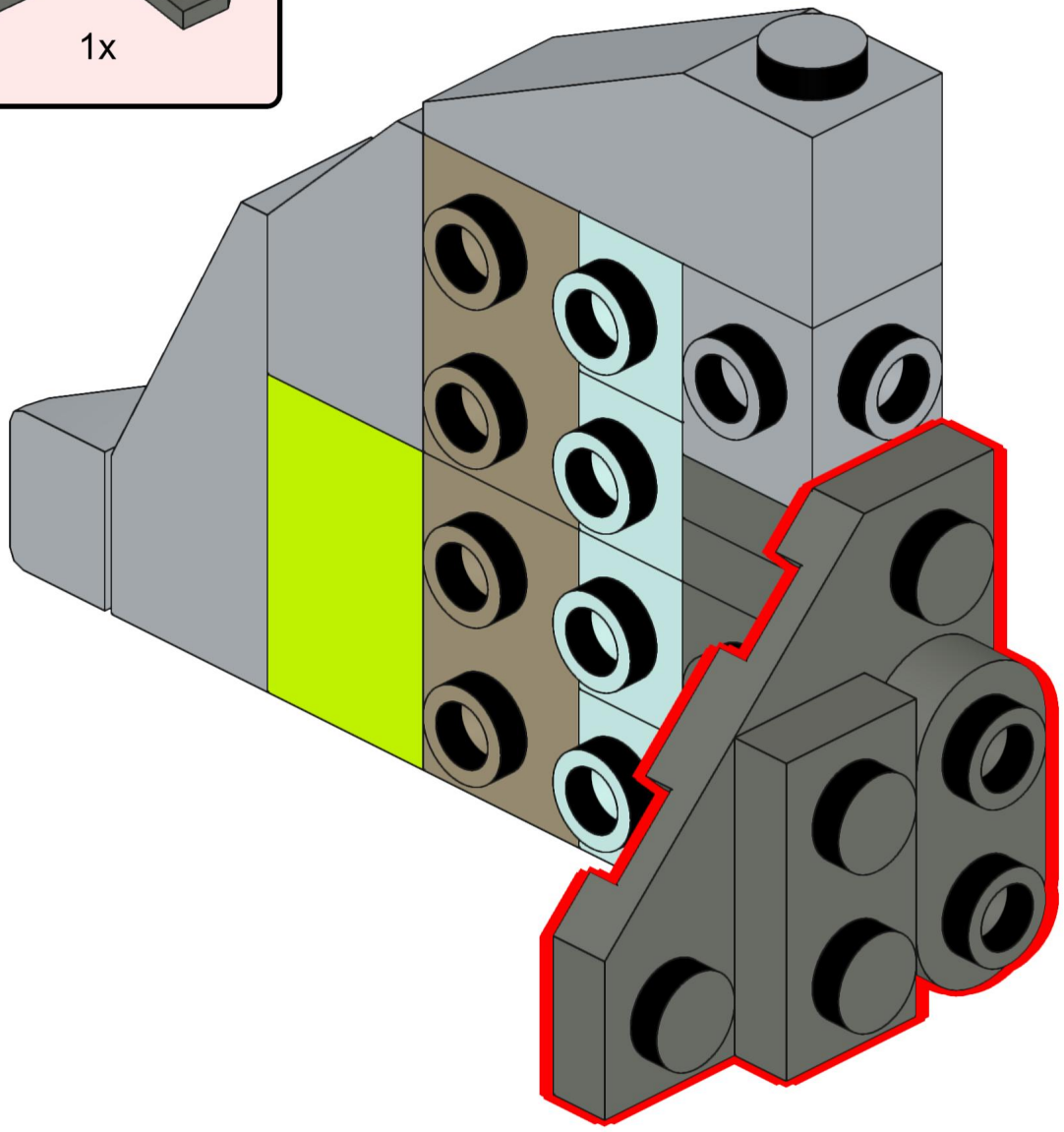

89

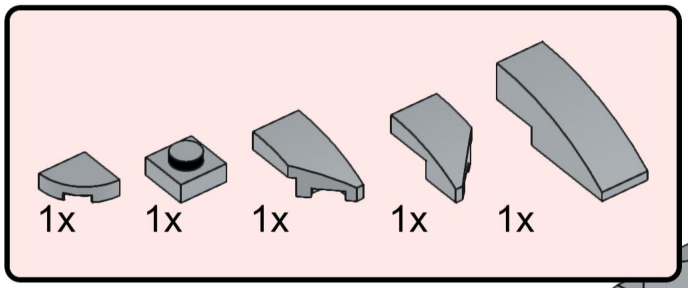

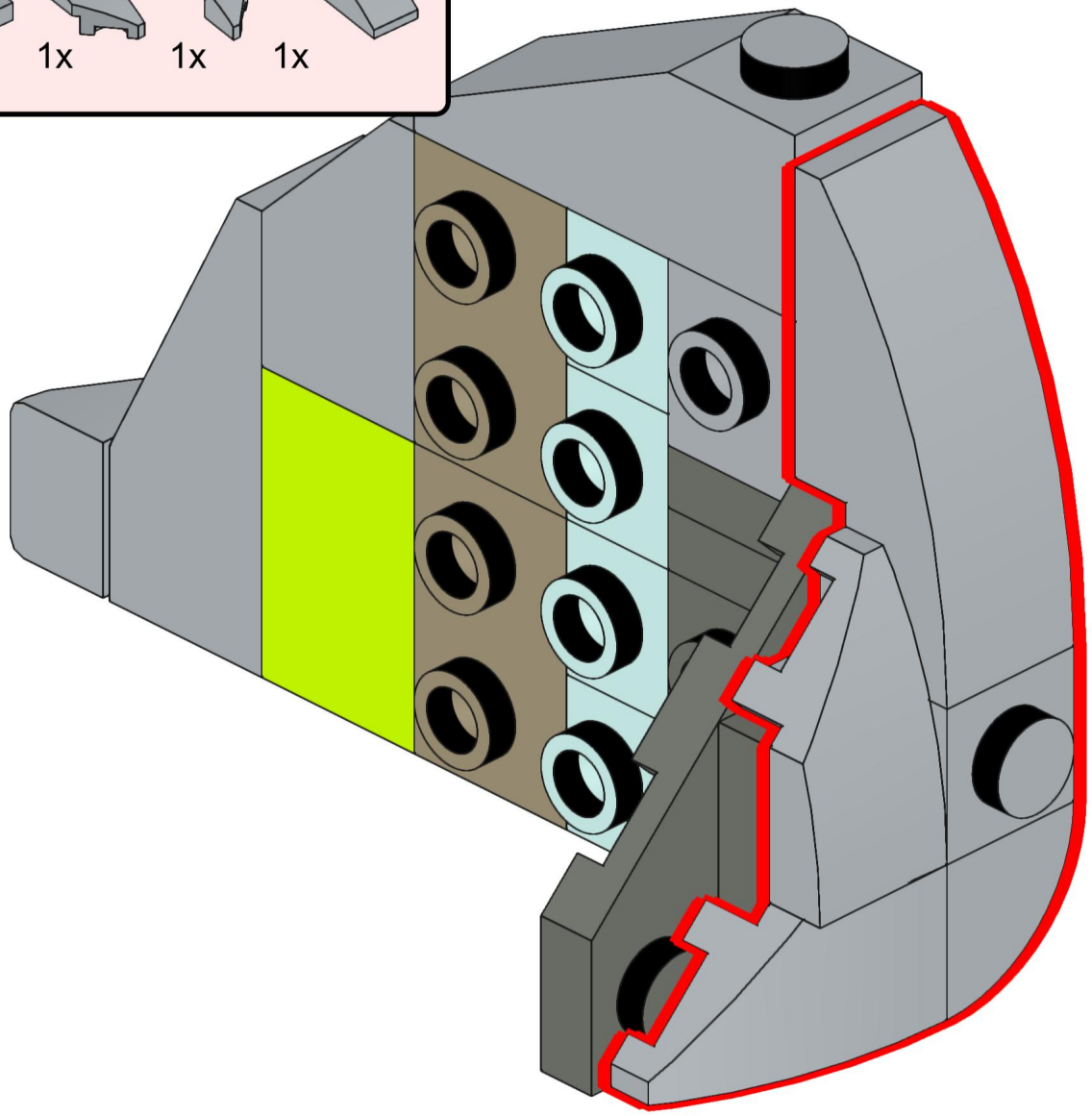

90

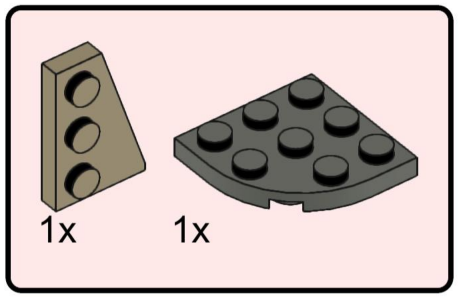

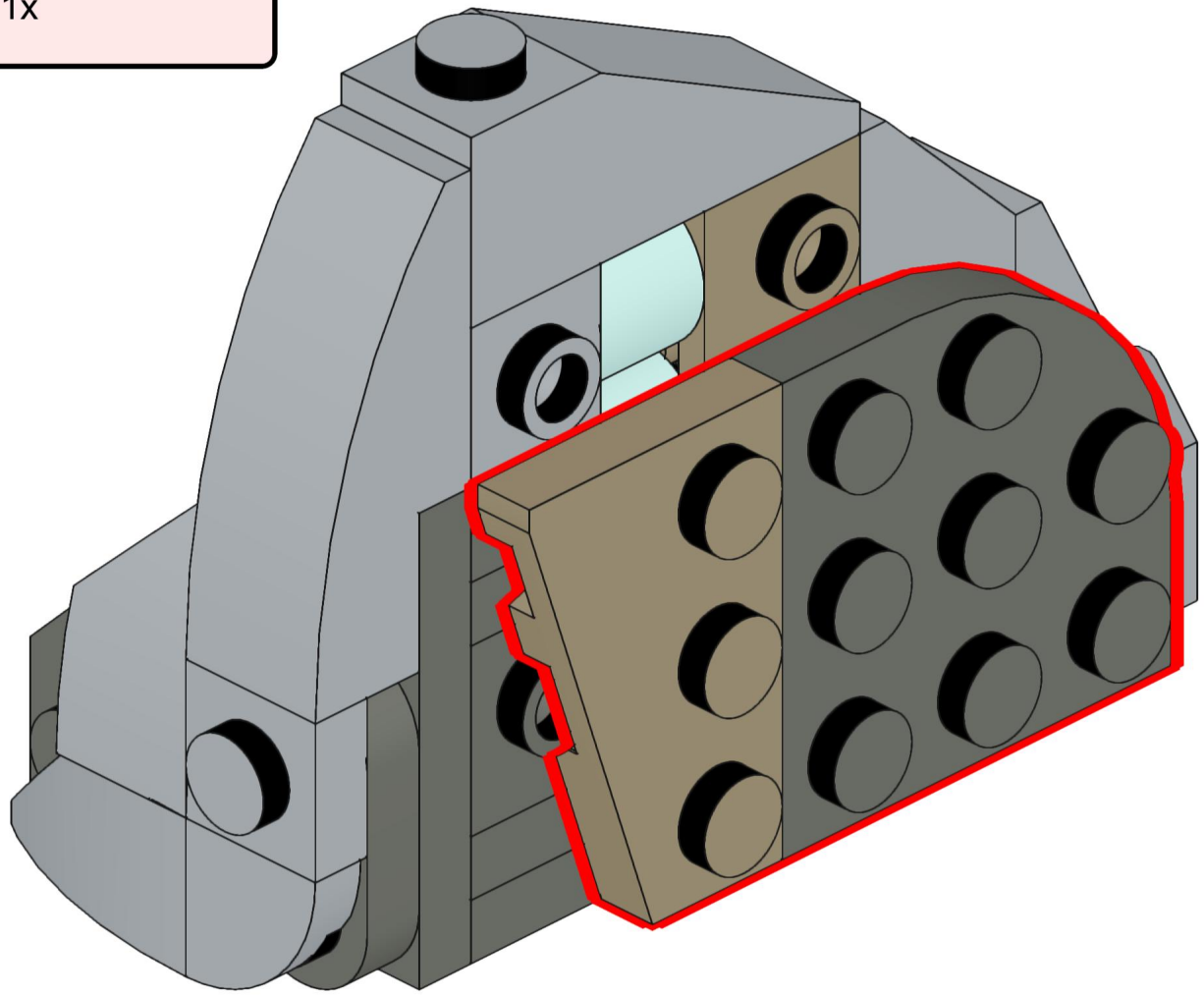

91

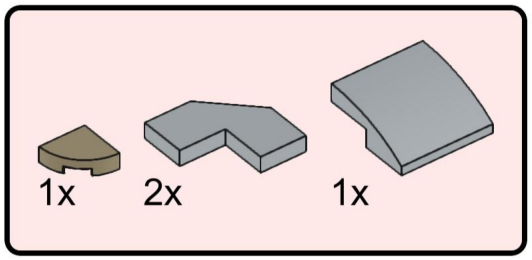

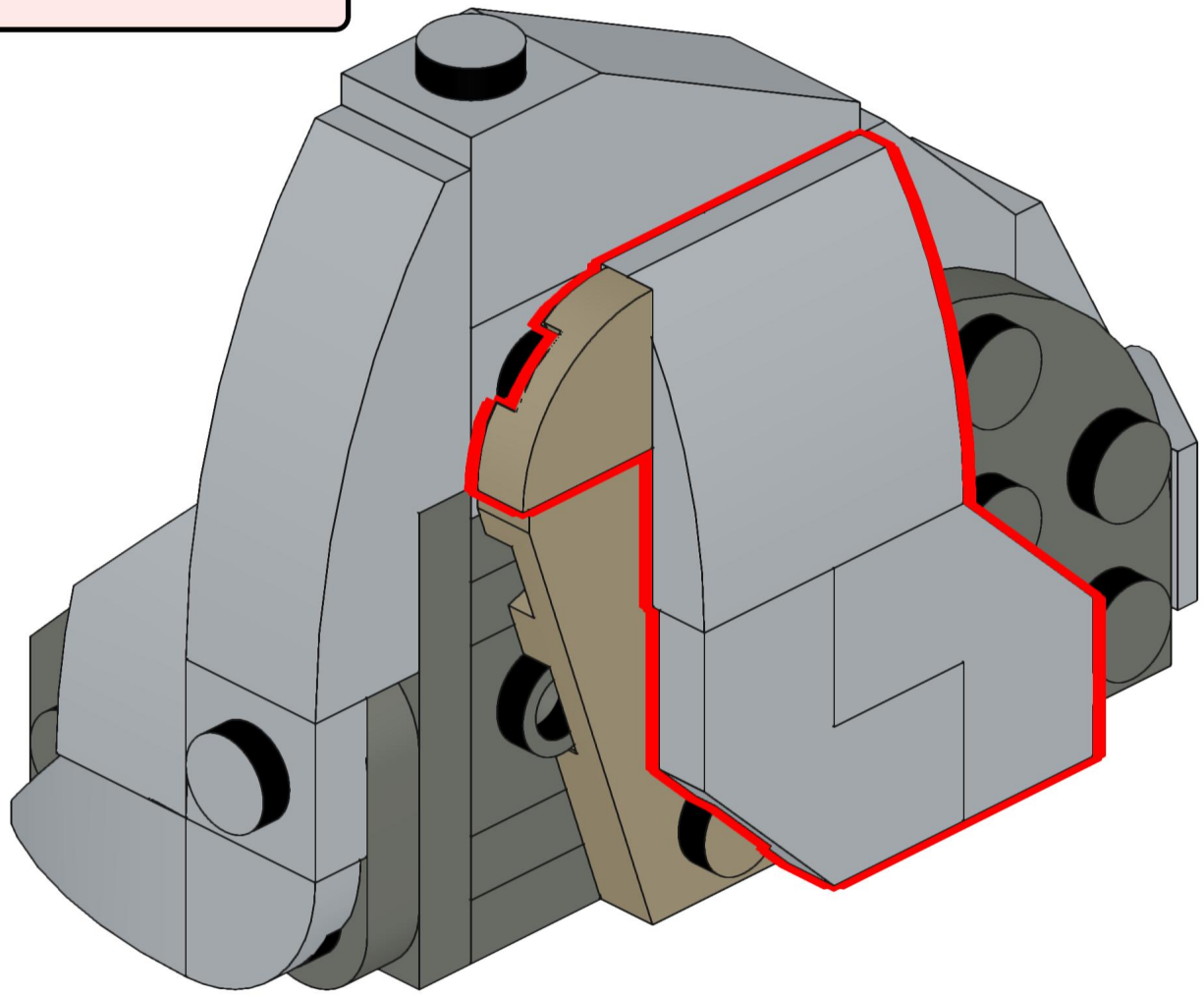

92

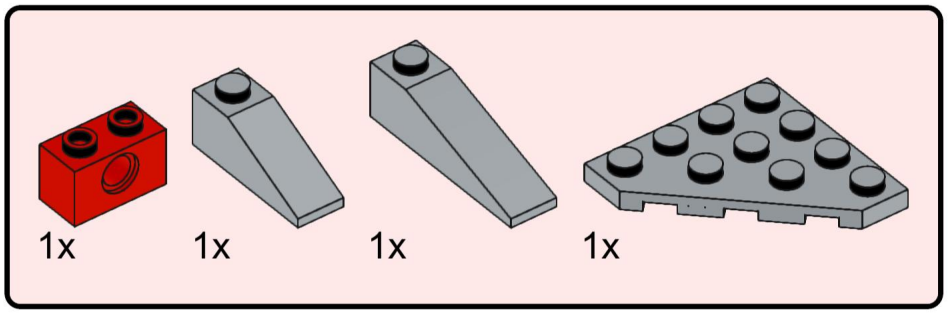

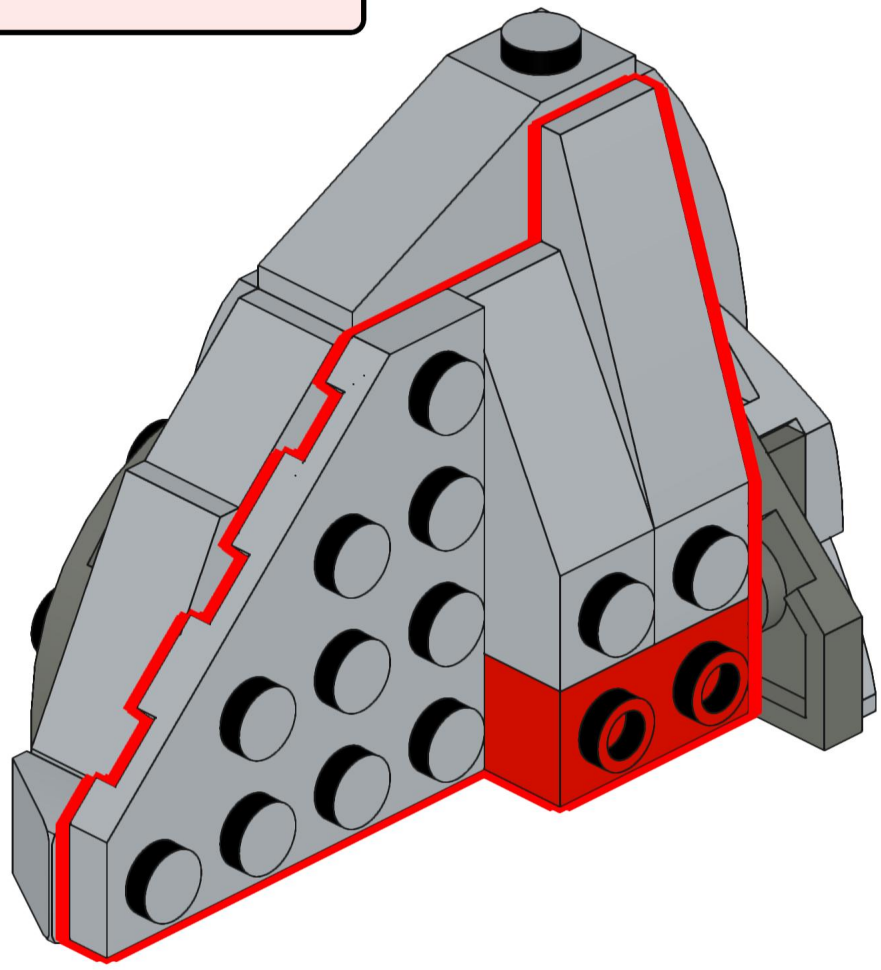

93

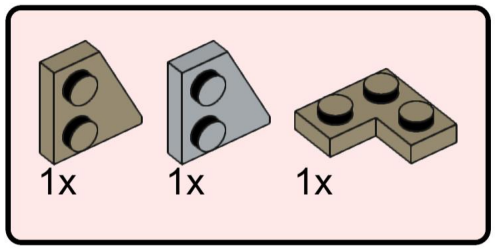

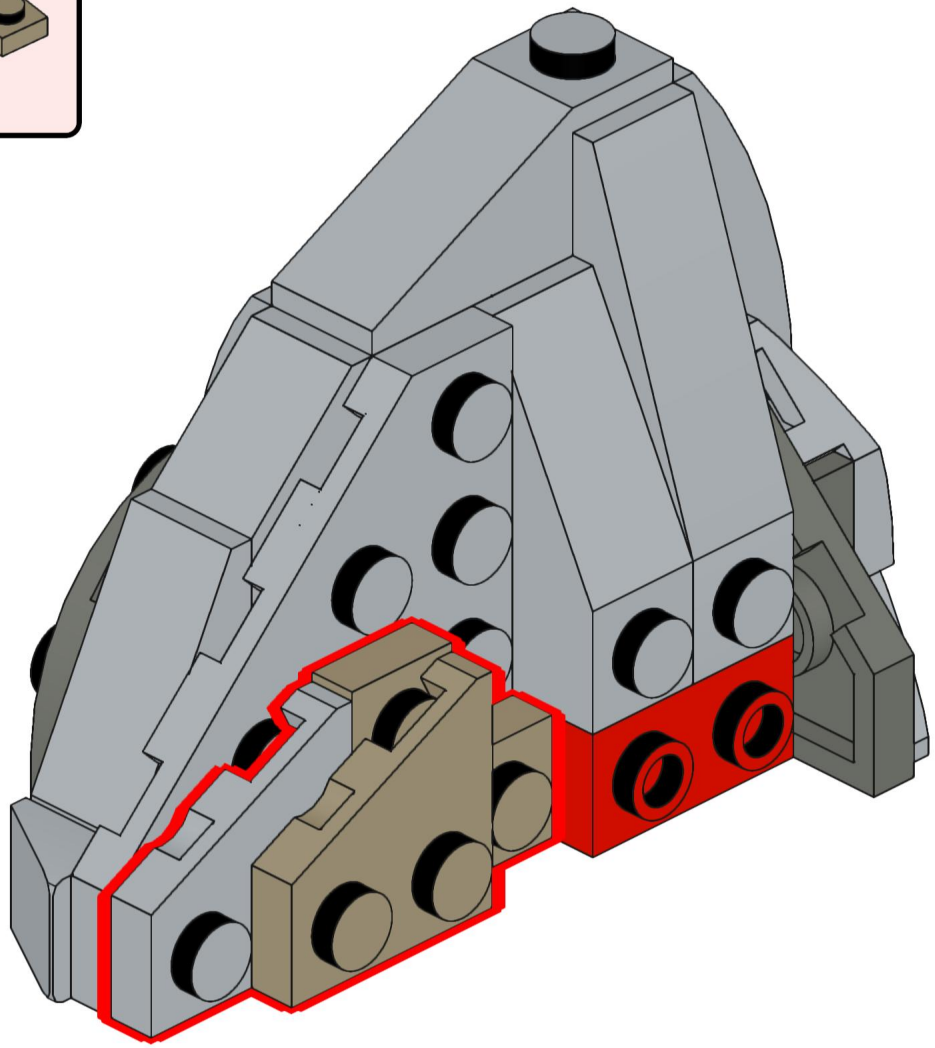

94

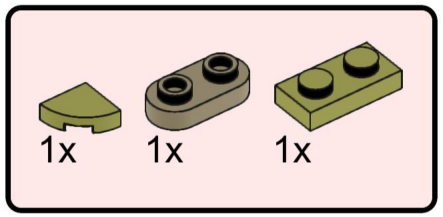

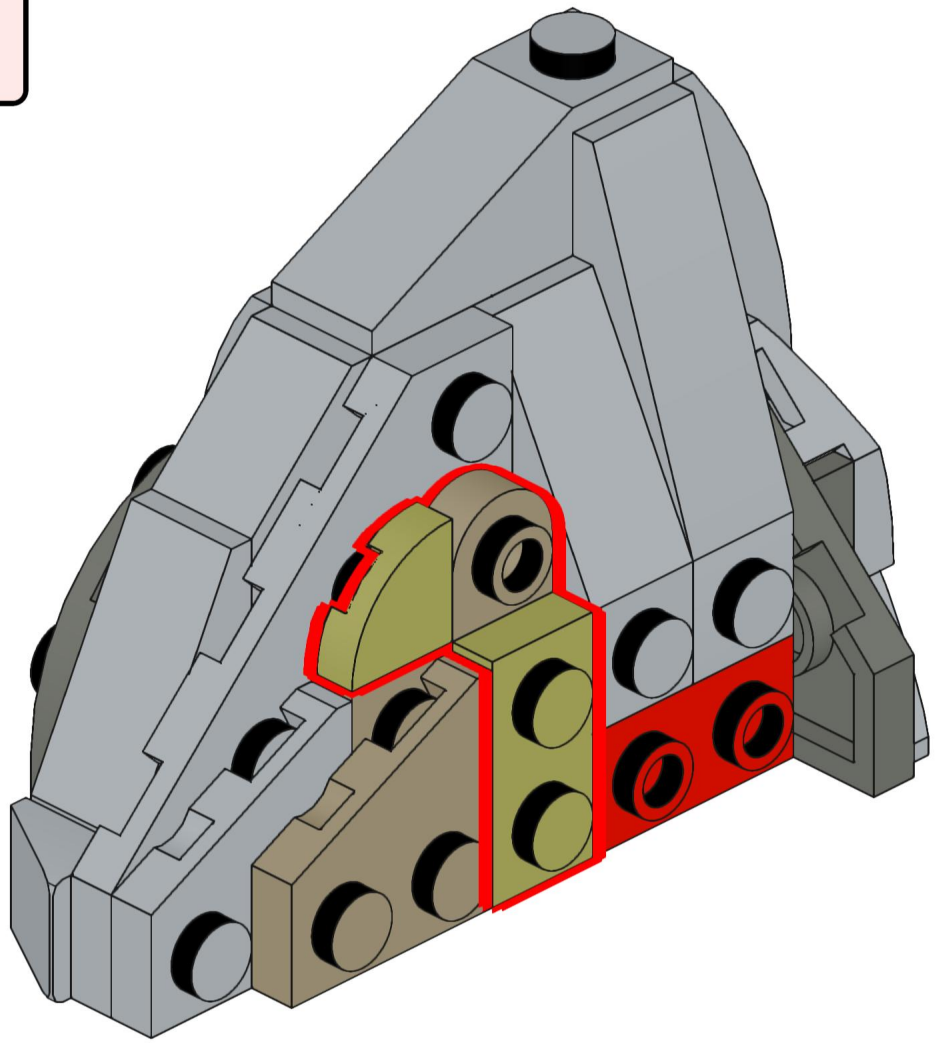

95

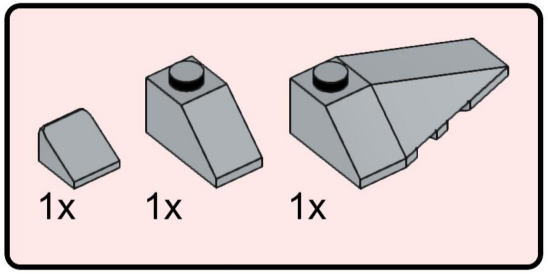

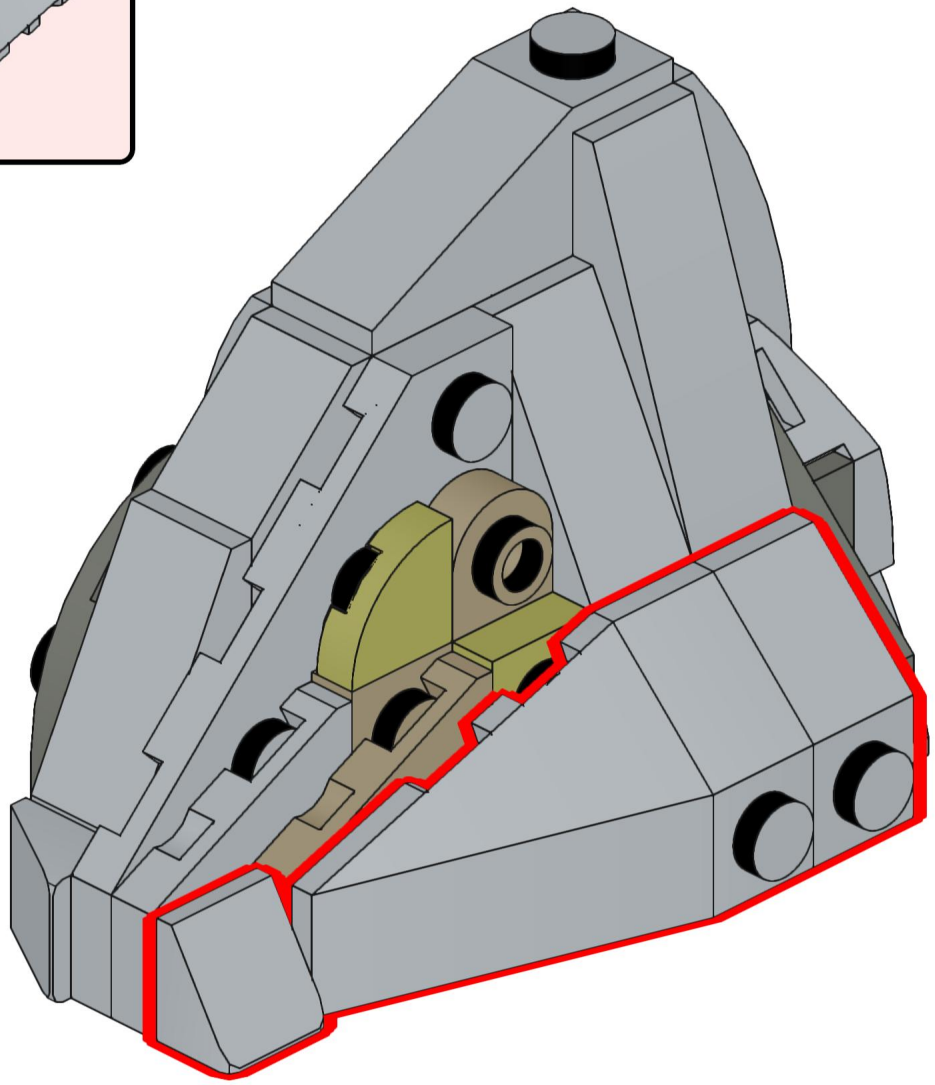

96

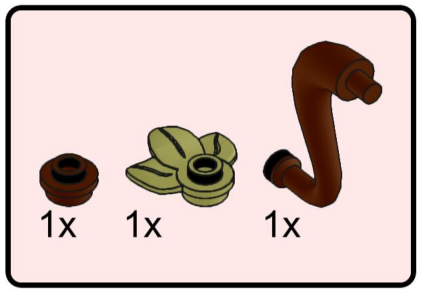

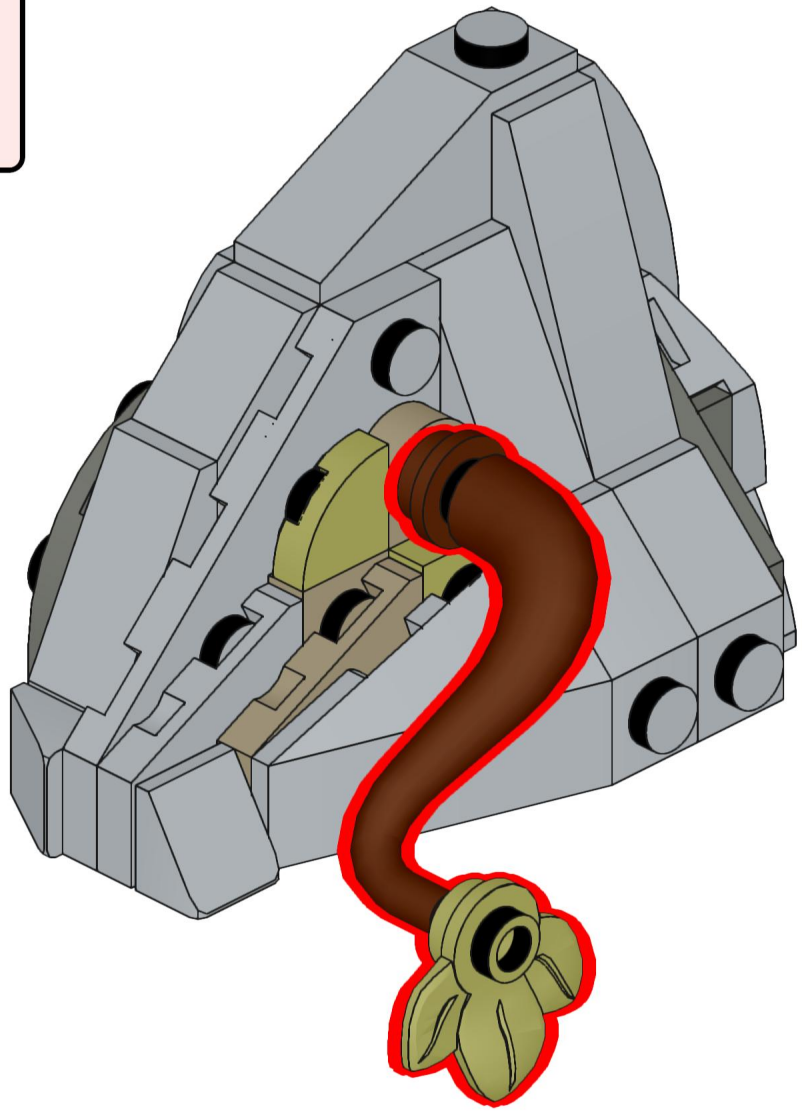

97

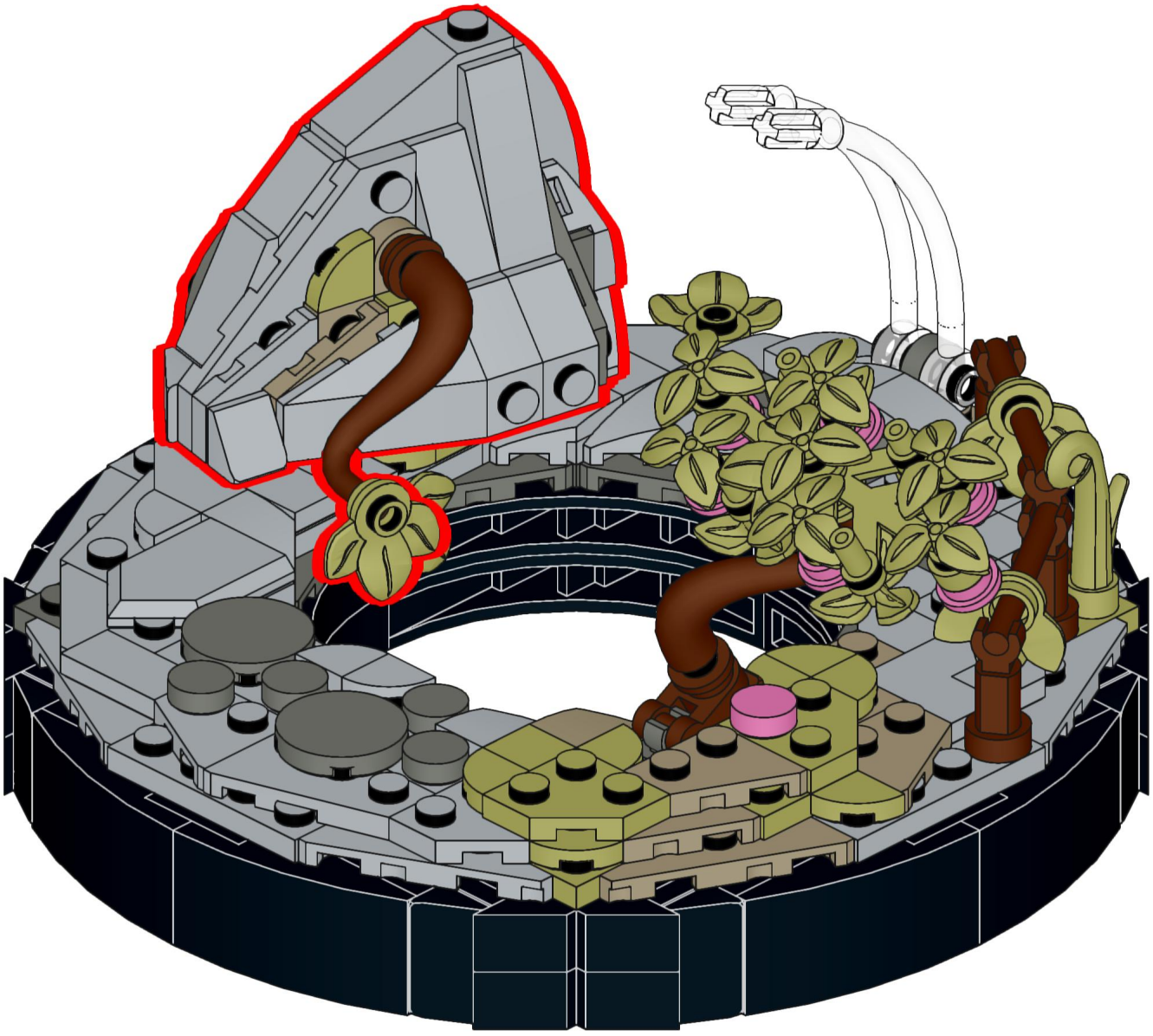

98

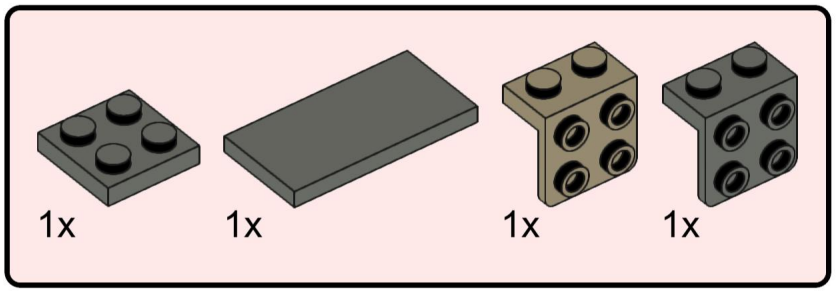



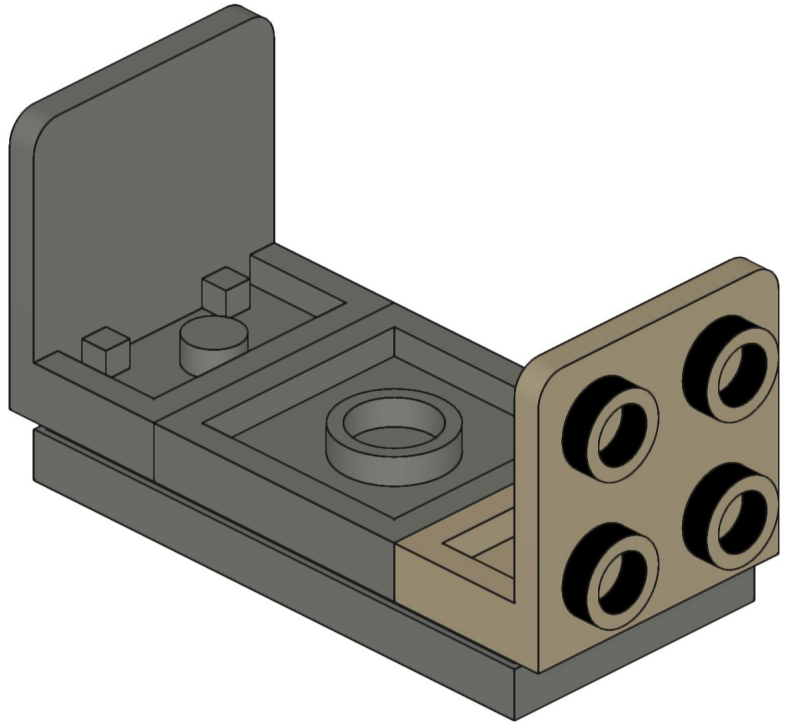

99

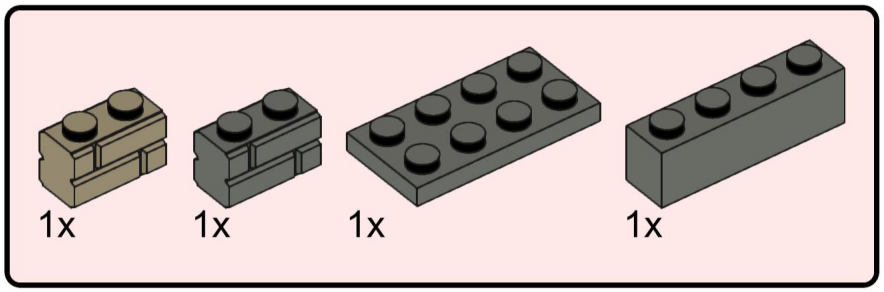

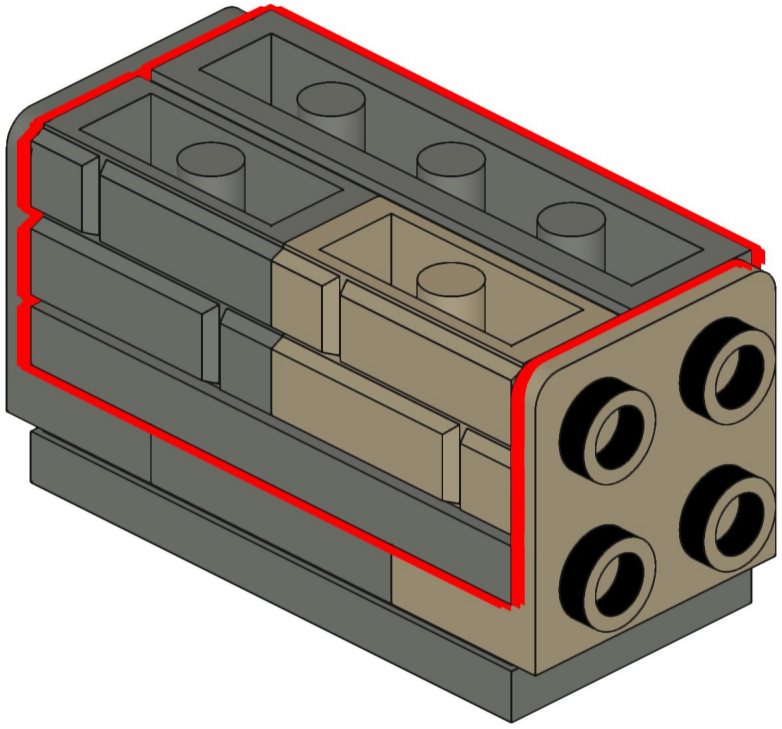

100

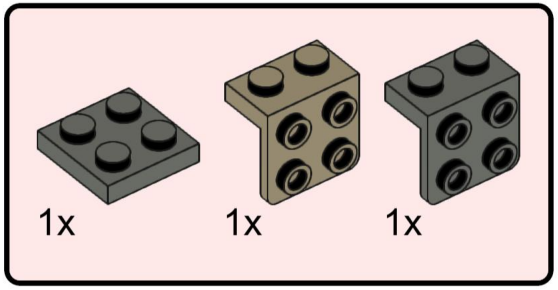

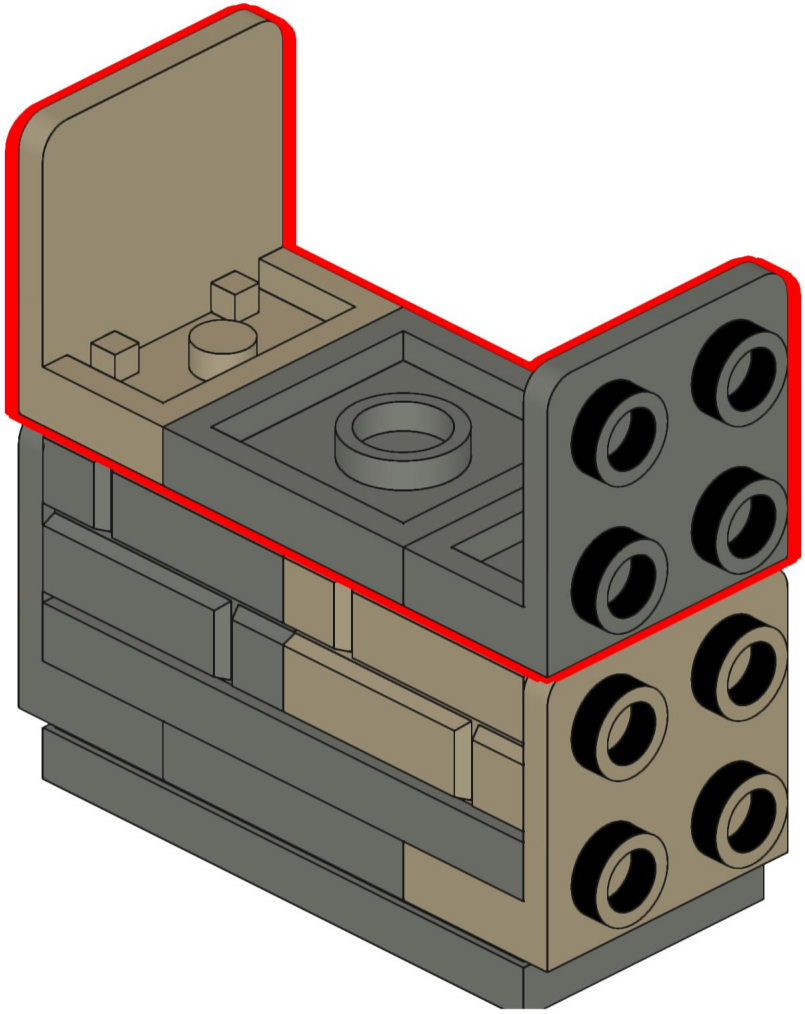

101

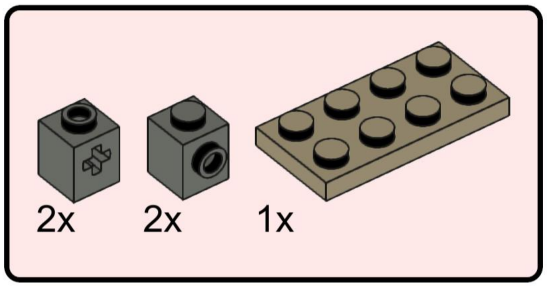

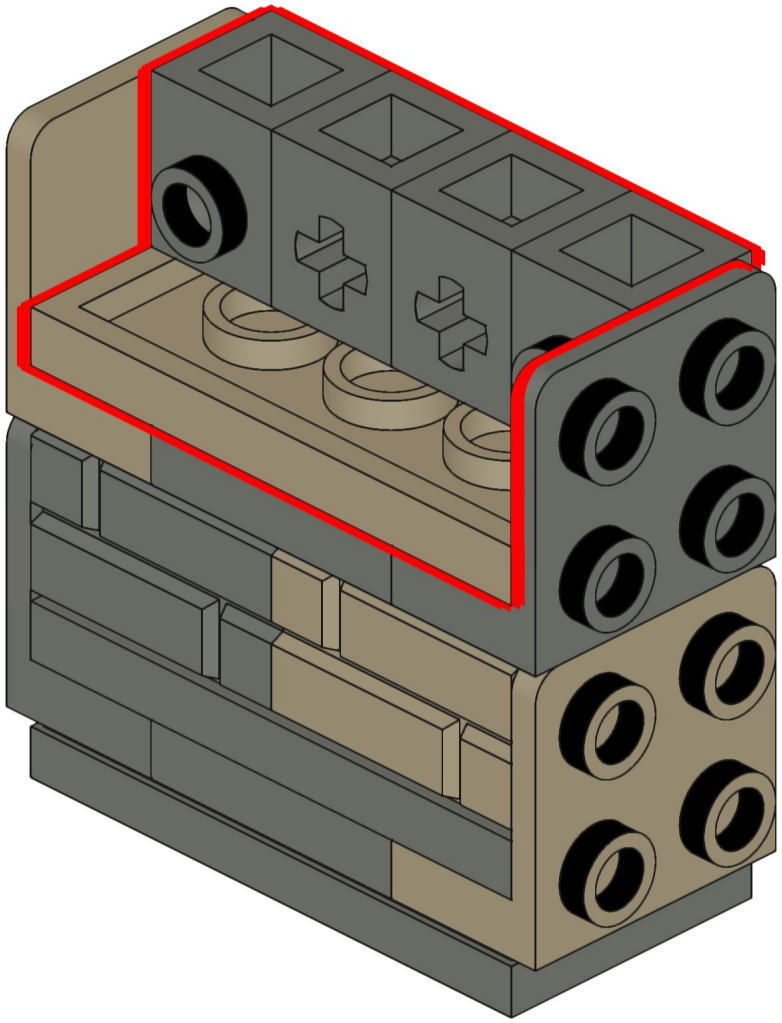

102

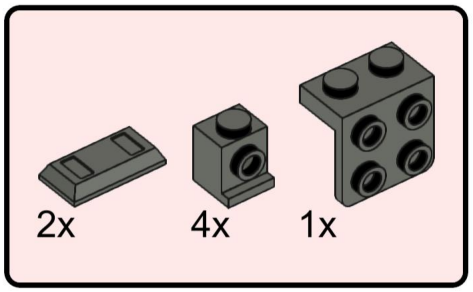

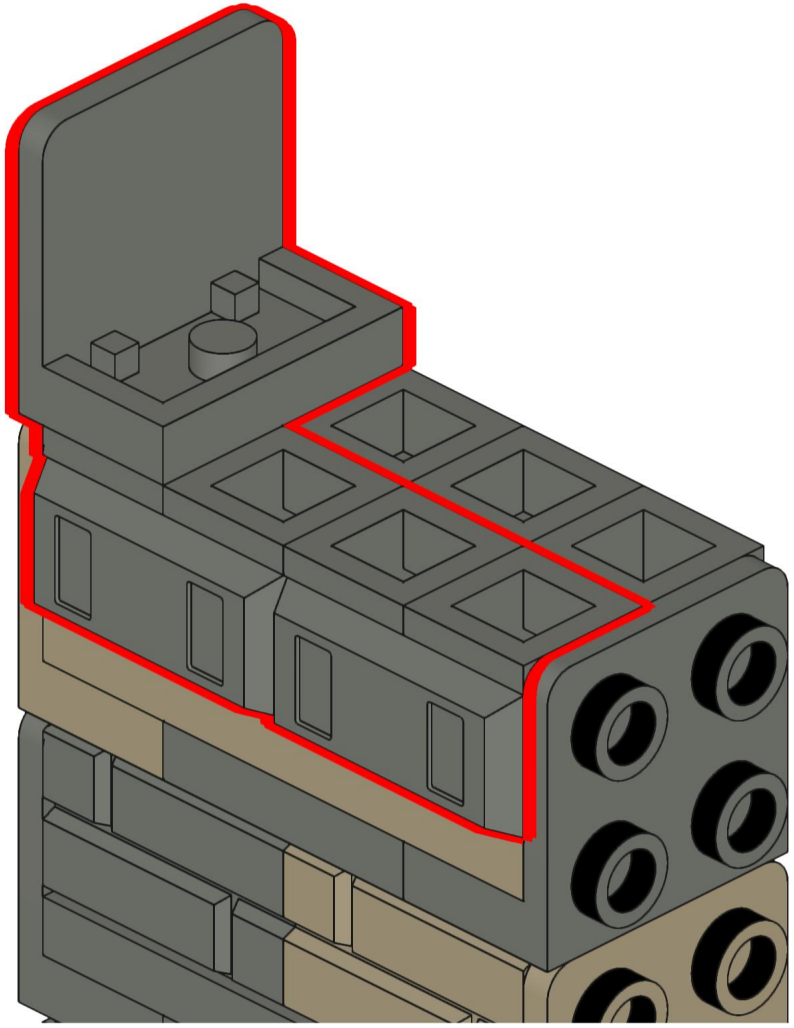

103

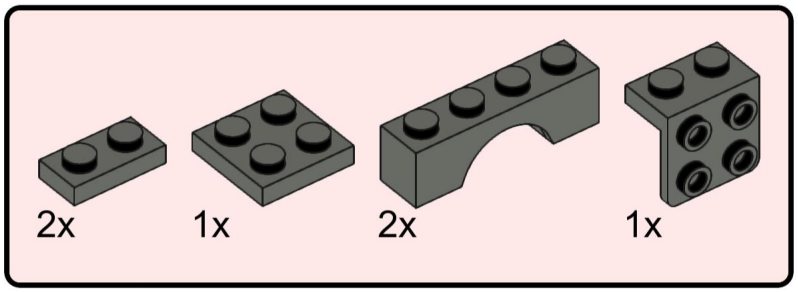

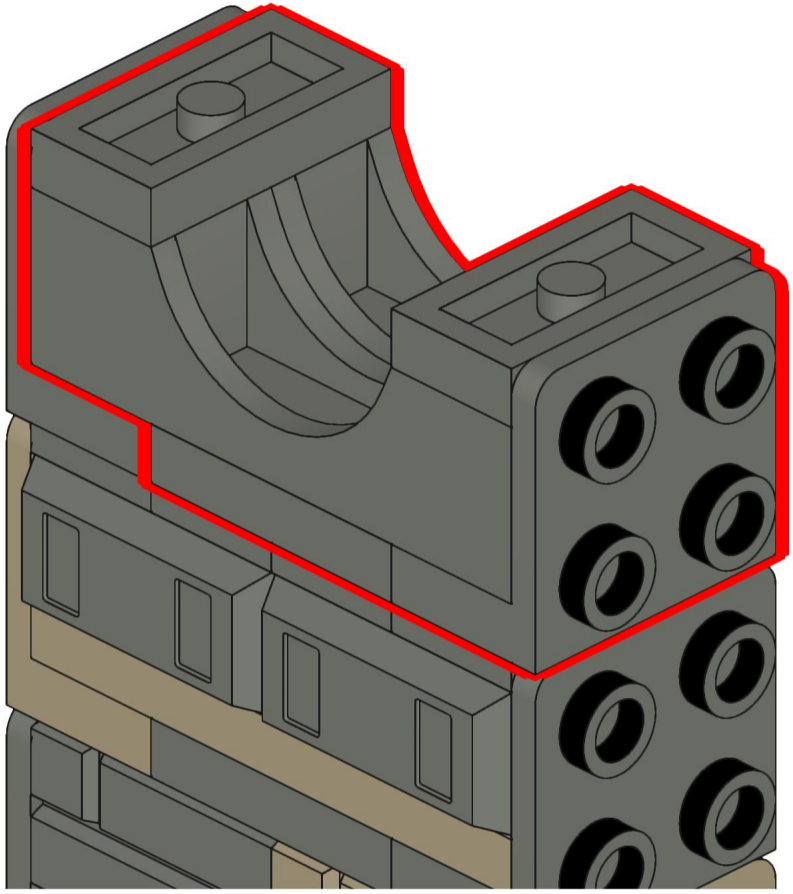

104

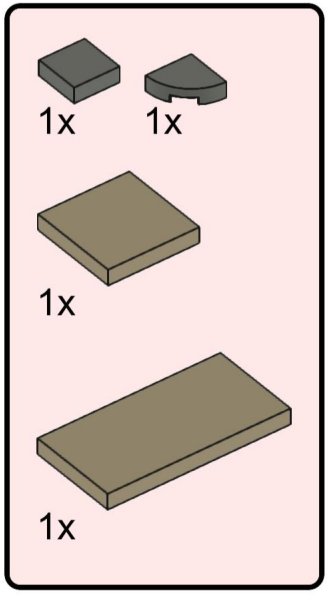

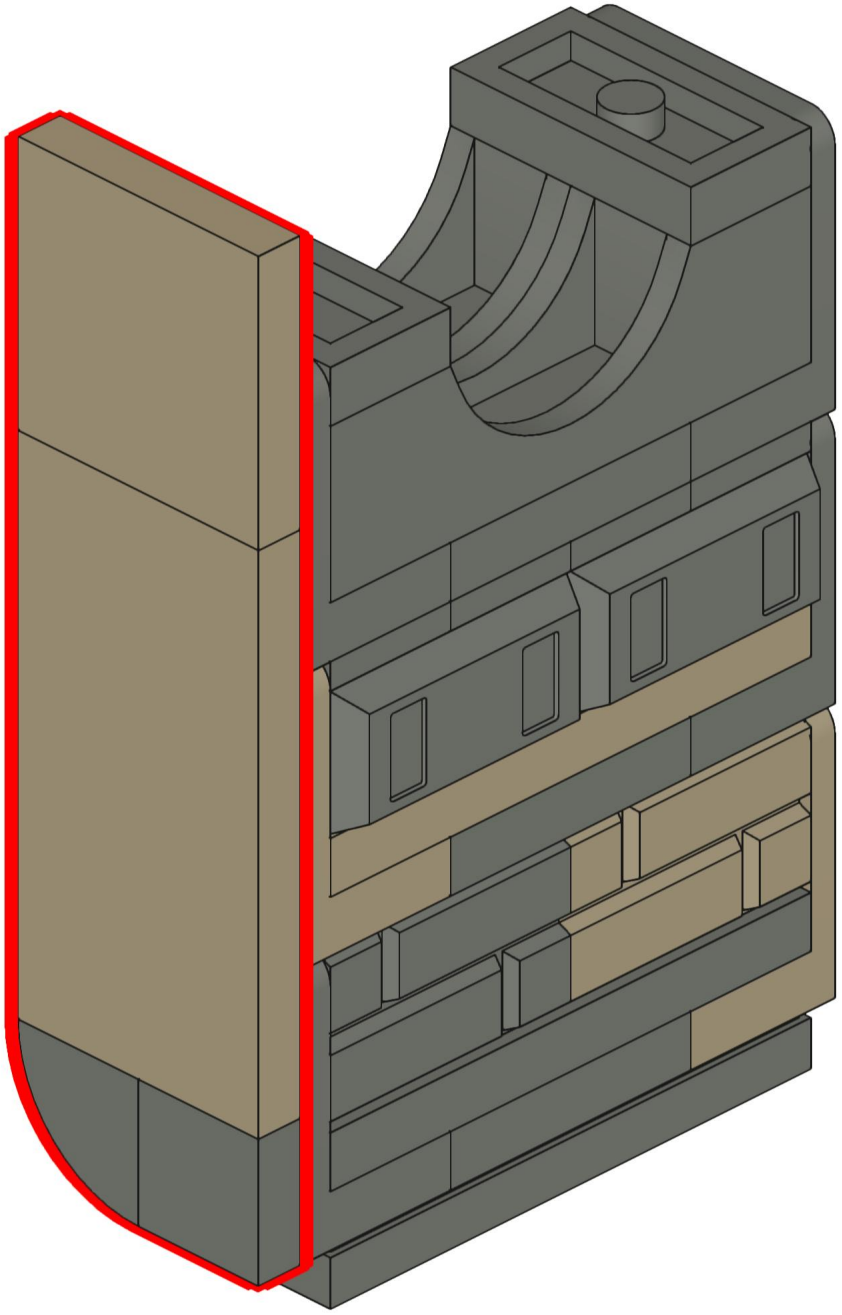

105

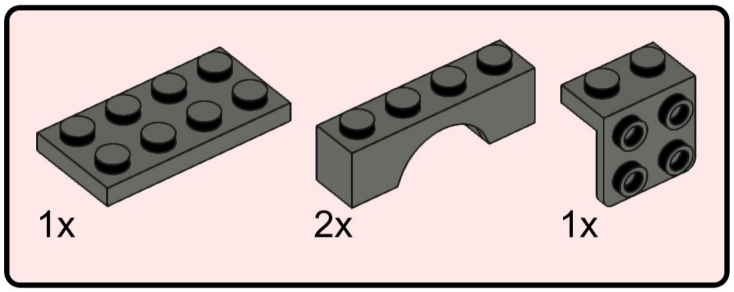

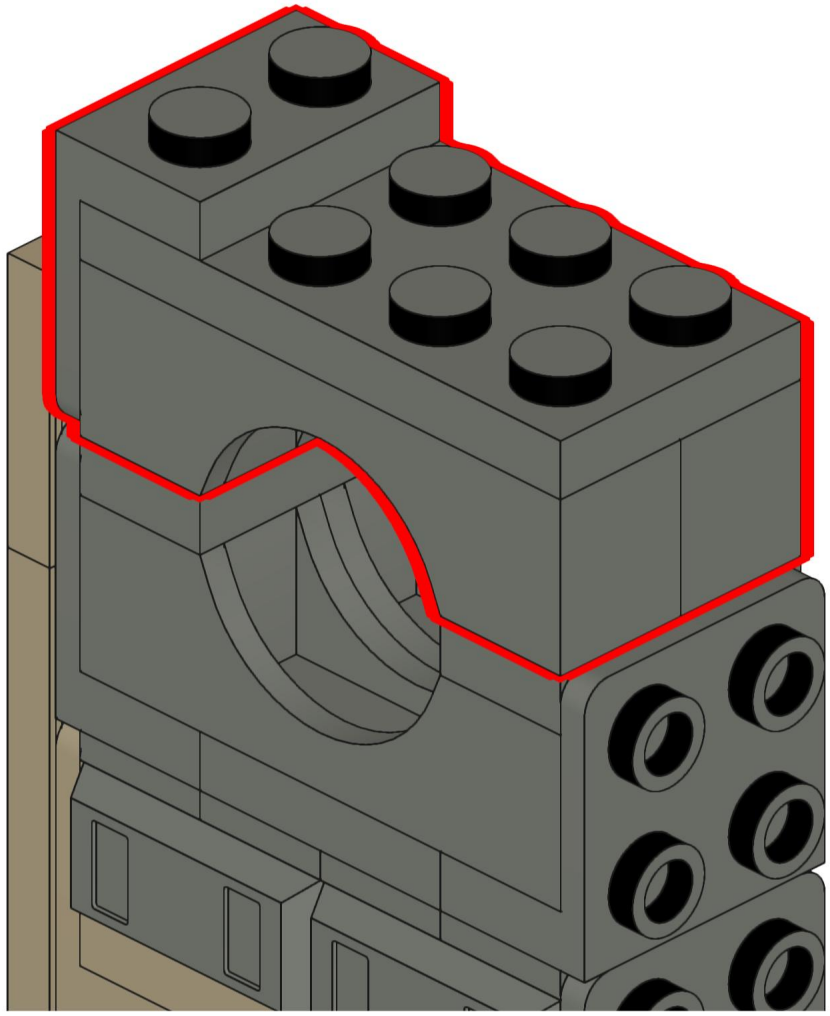

106

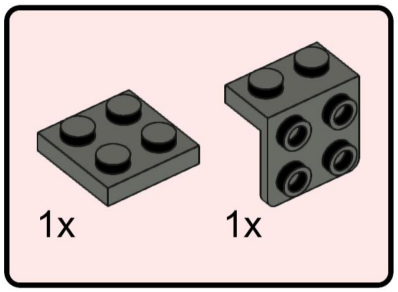

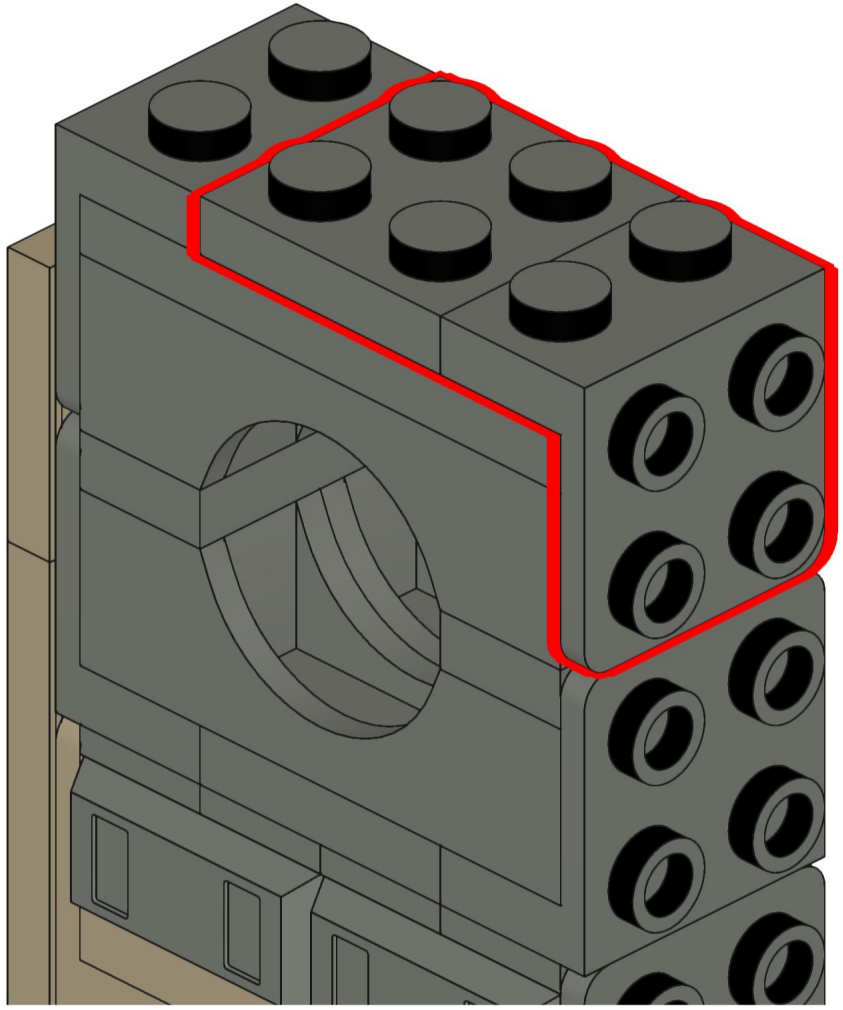

107

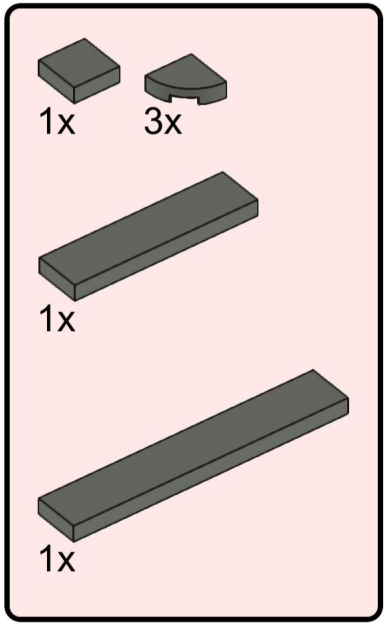

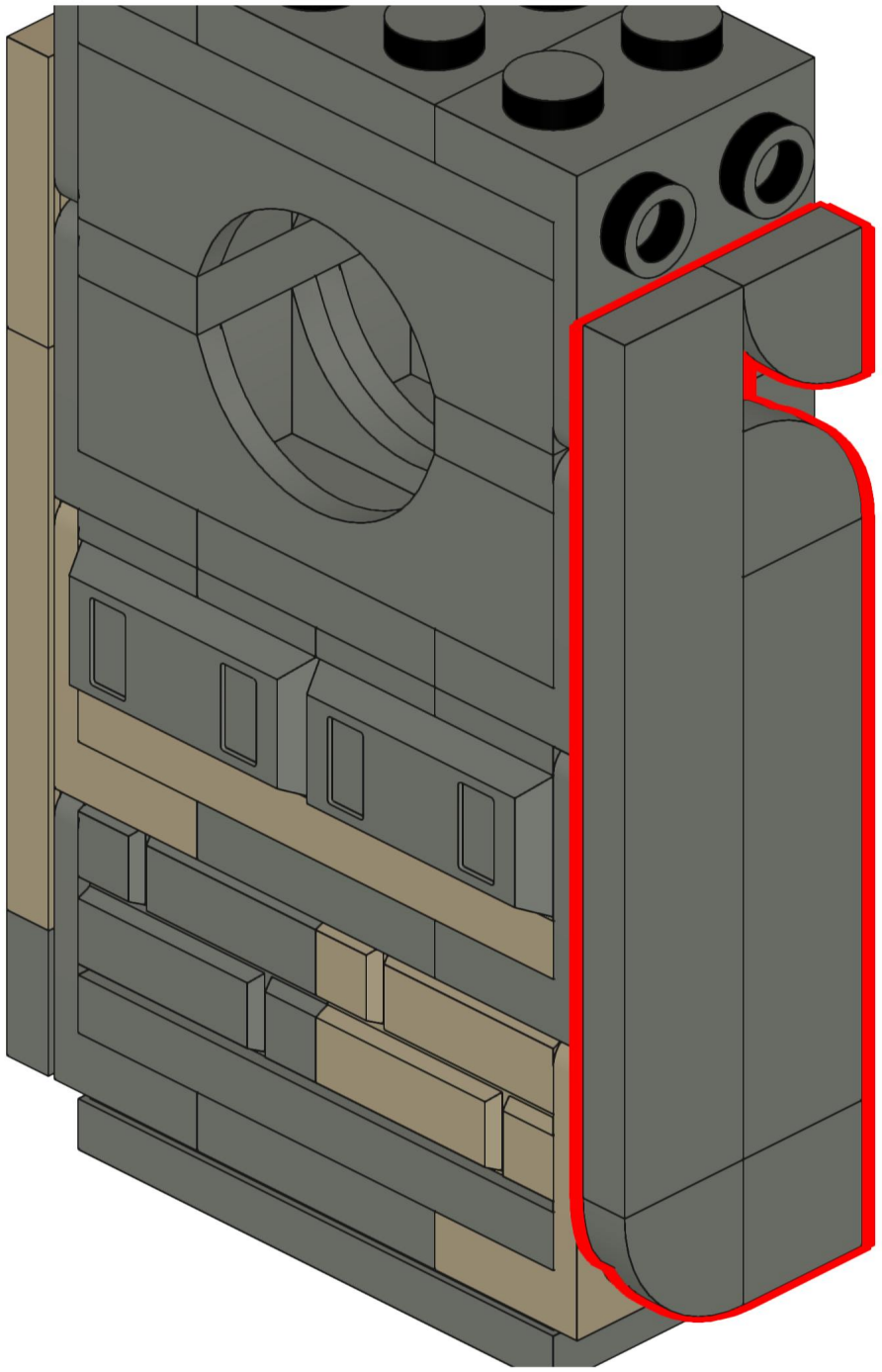

108

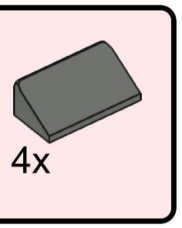

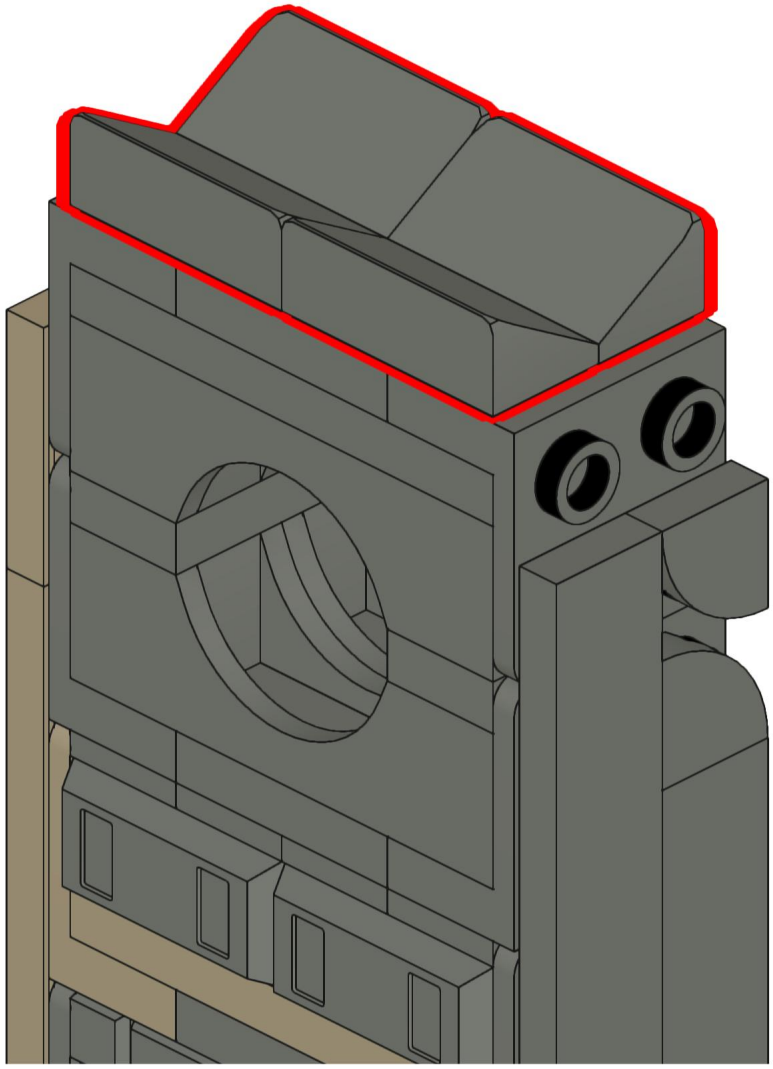

109

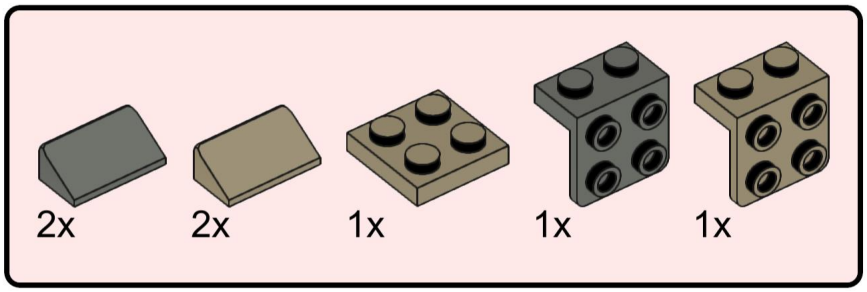

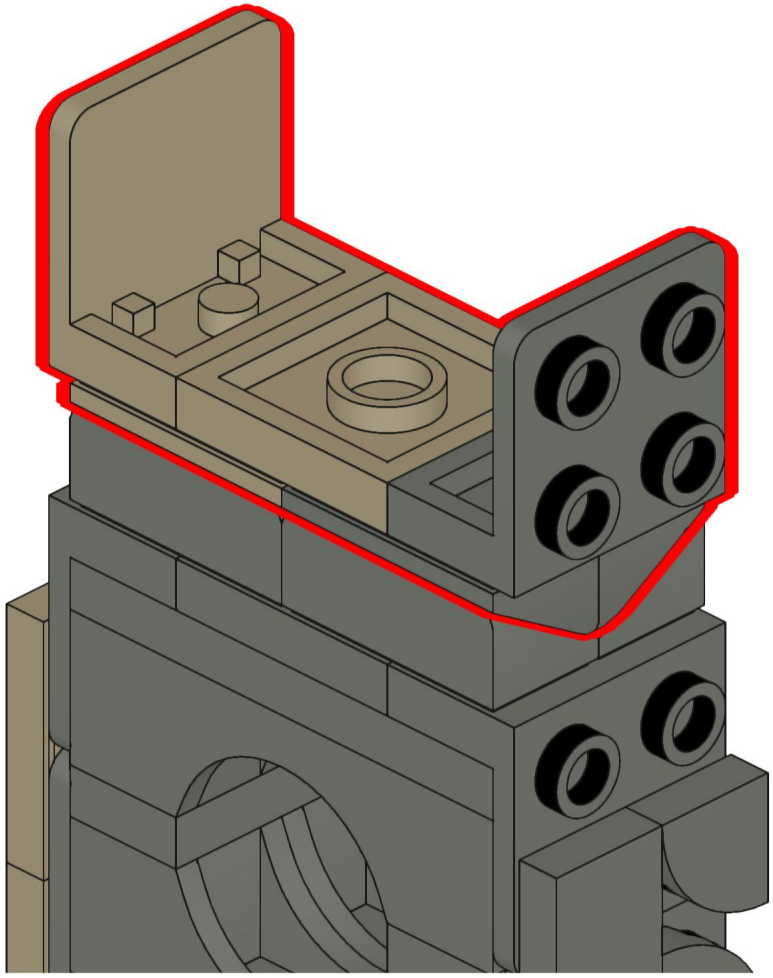

110

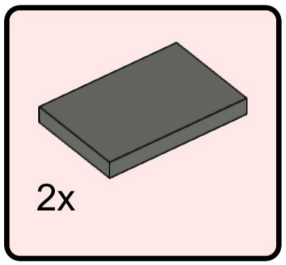

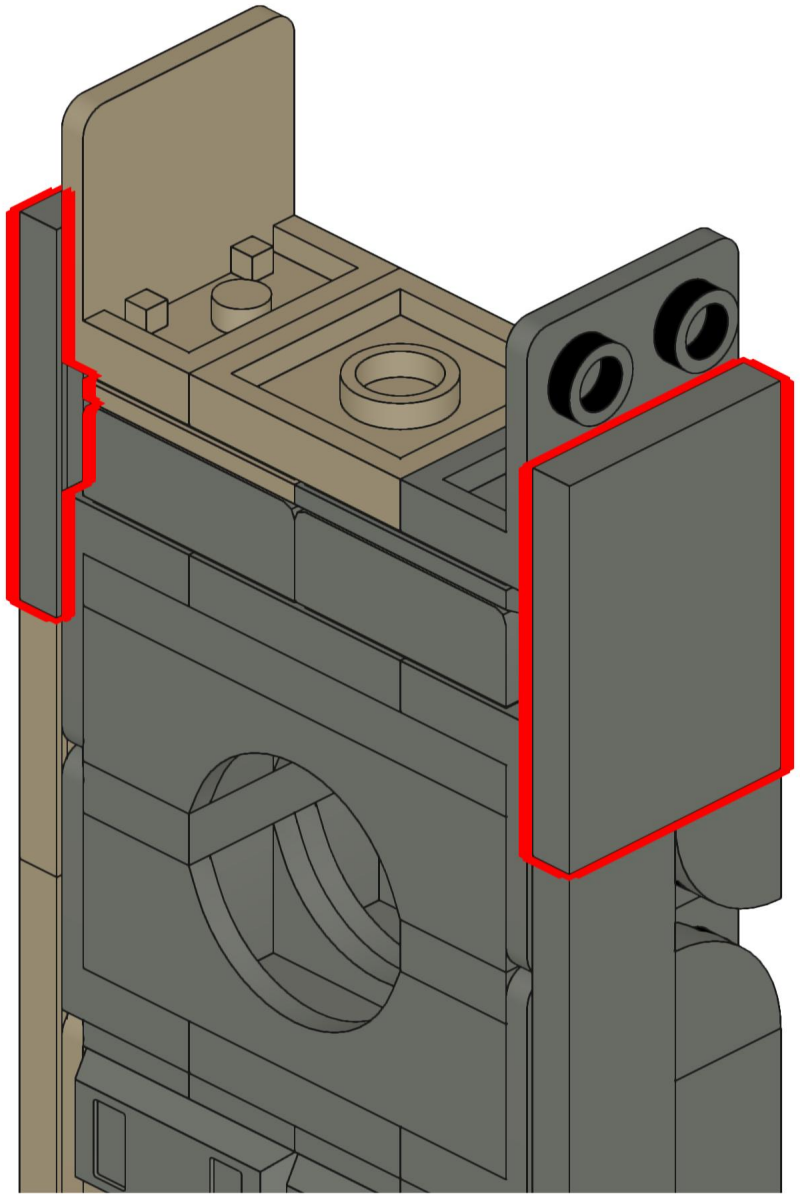

111

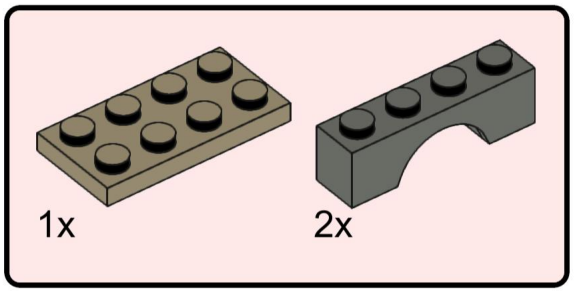

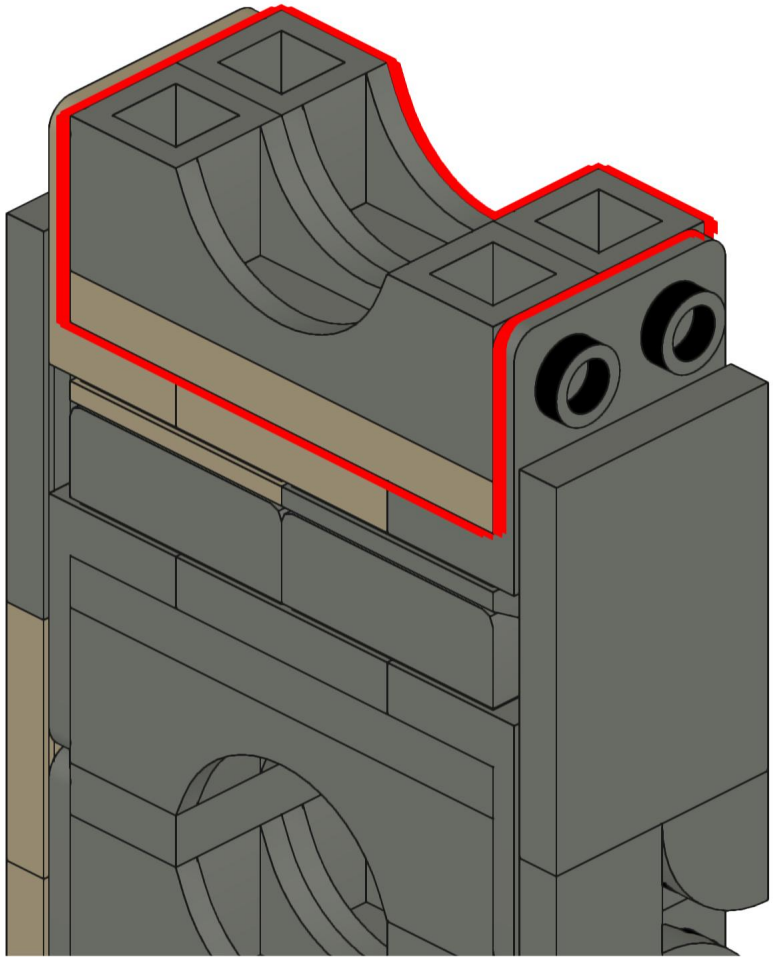

112

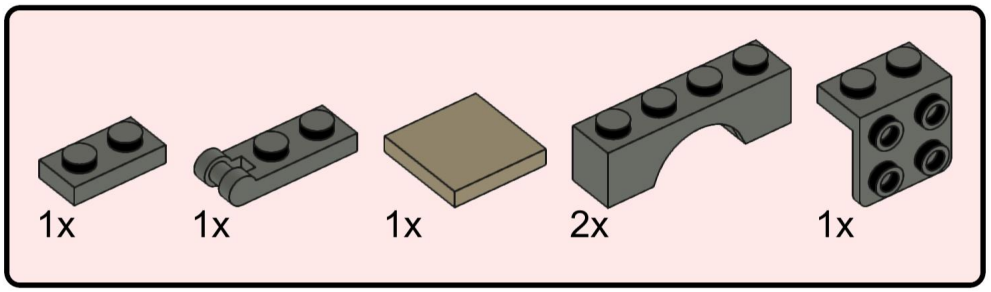

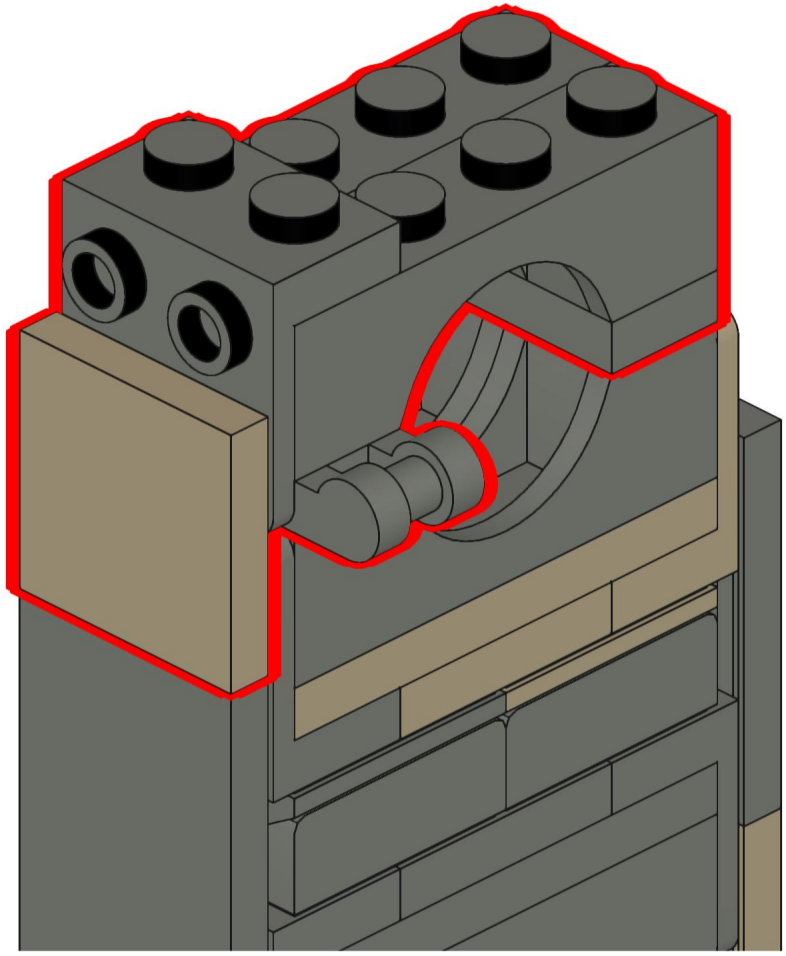

113

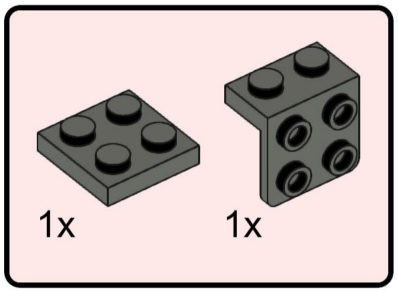

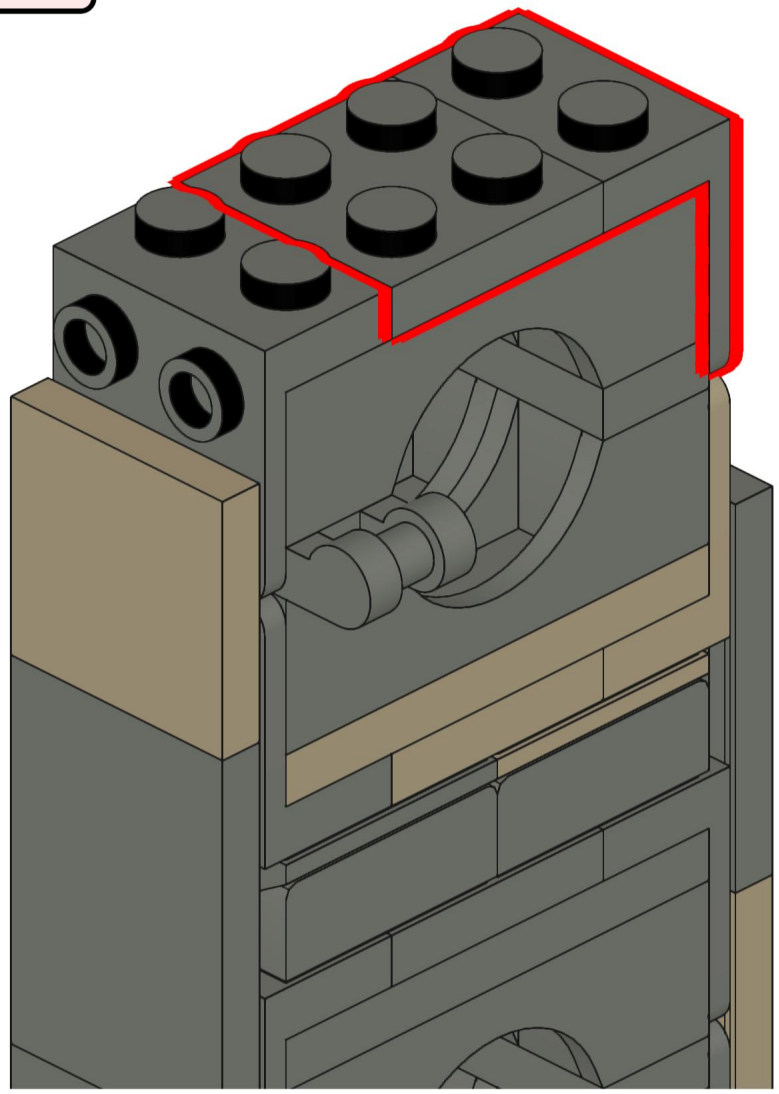

114

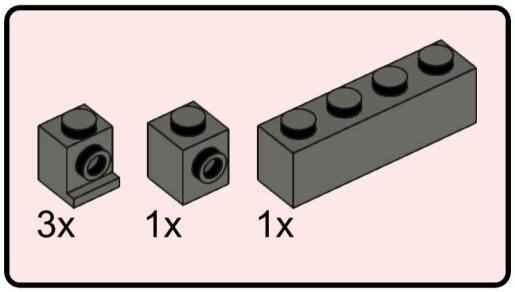

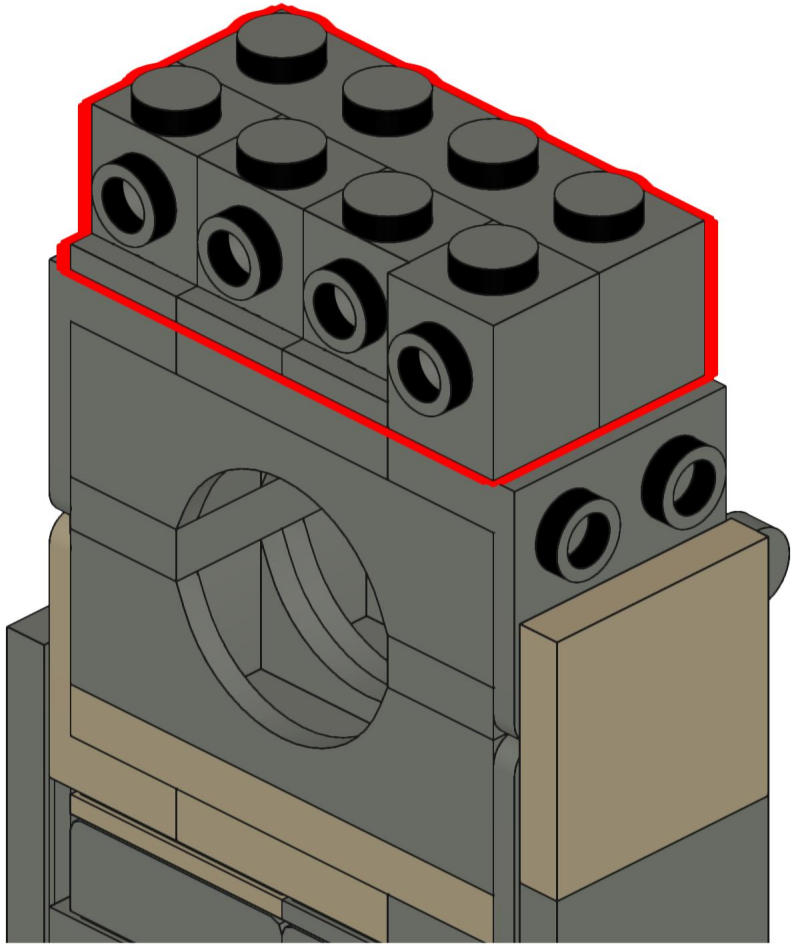

115

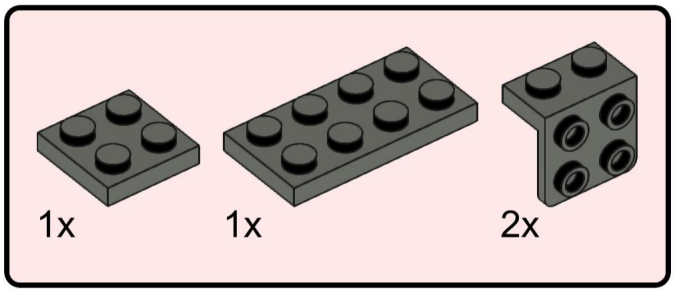

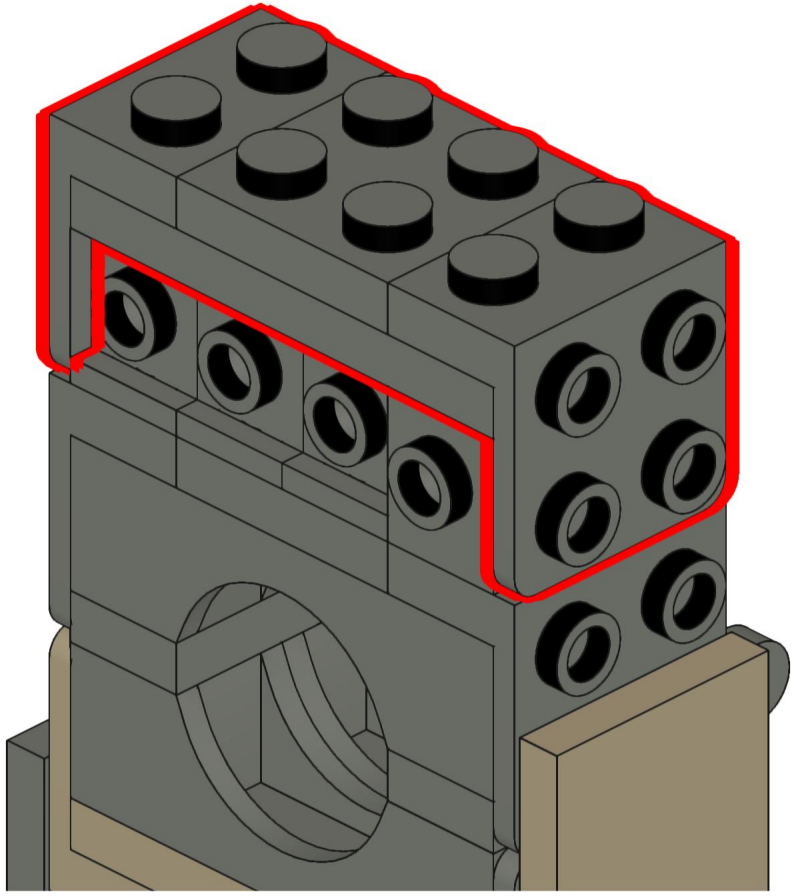

116

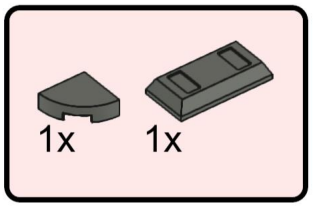

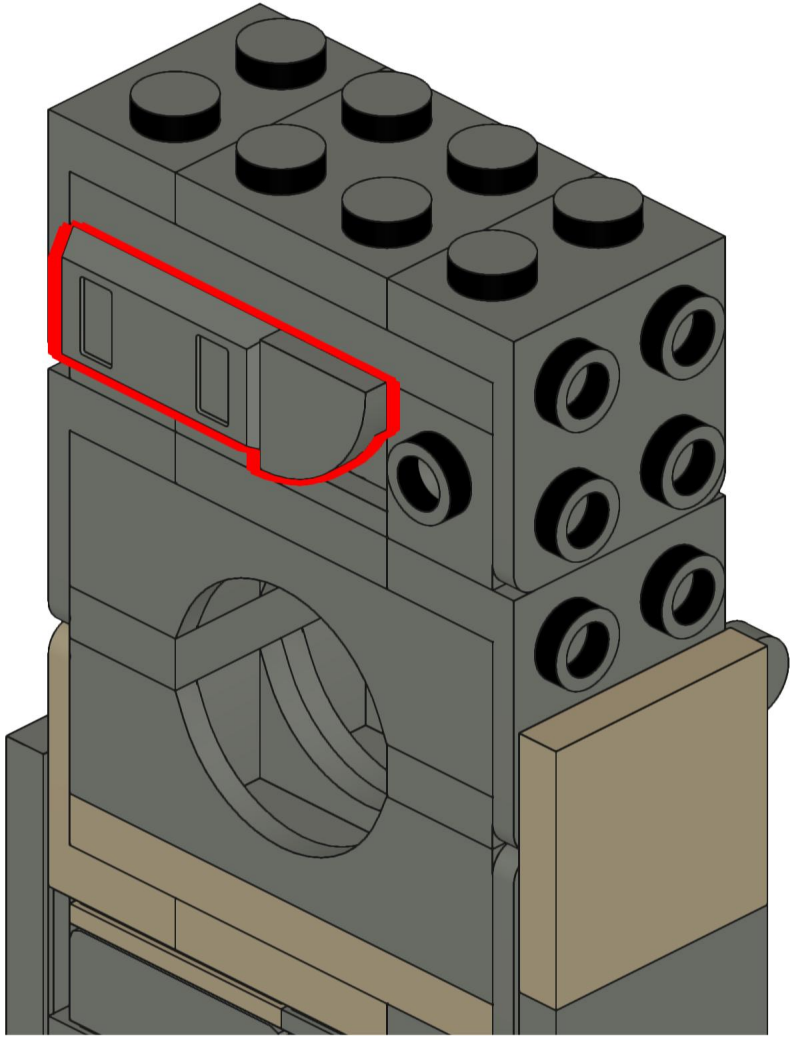

117

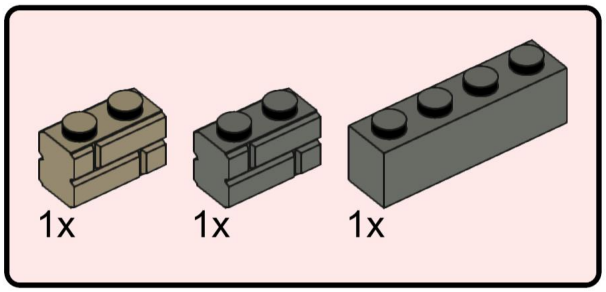

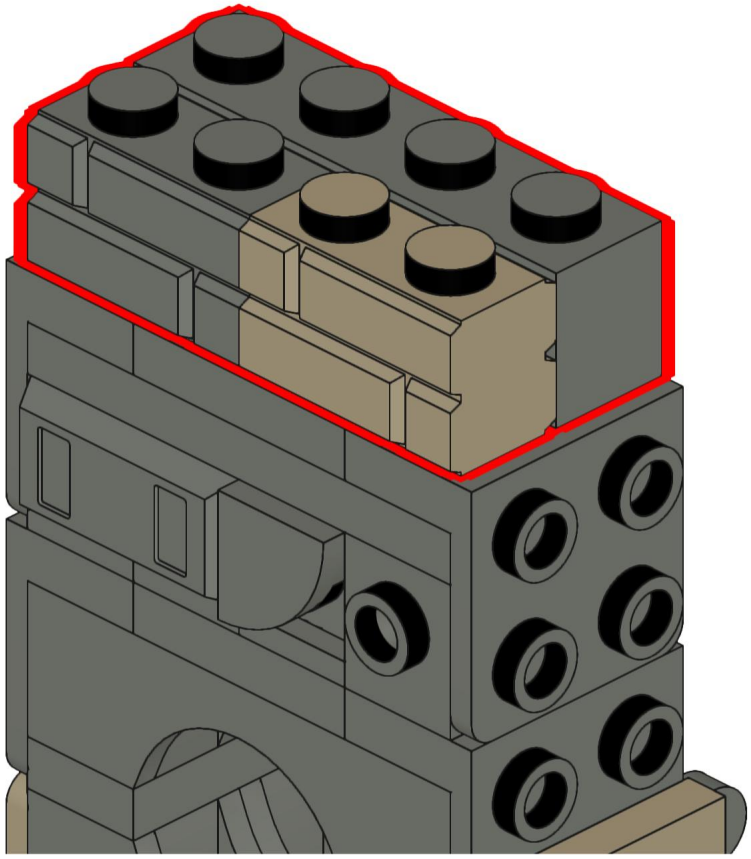

118

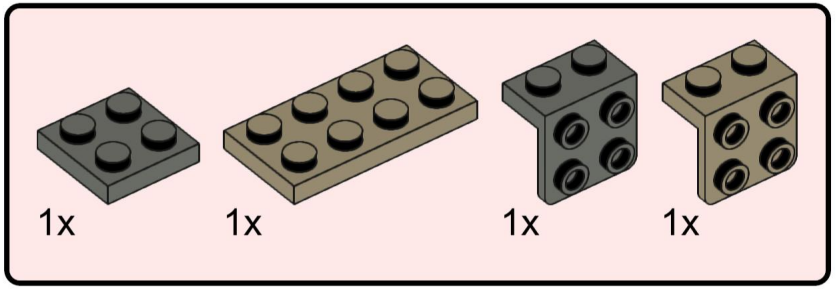

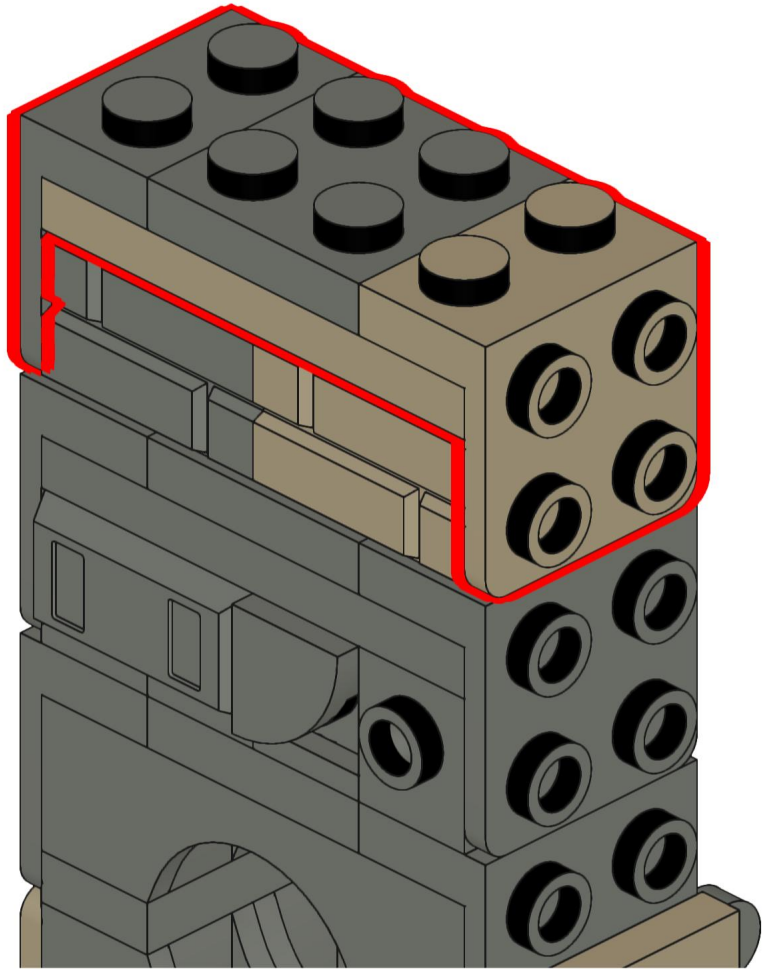

119

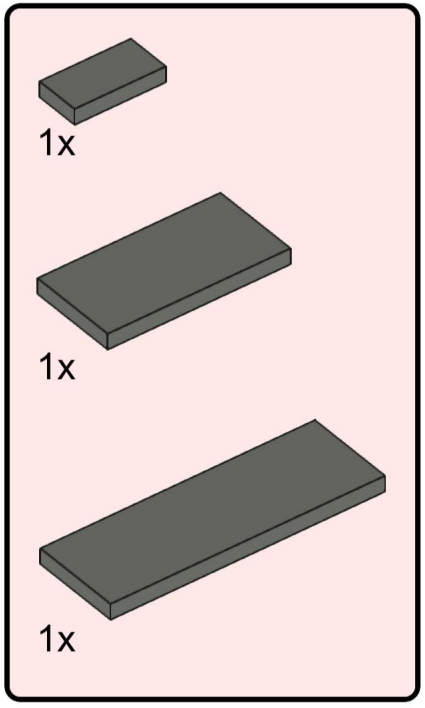

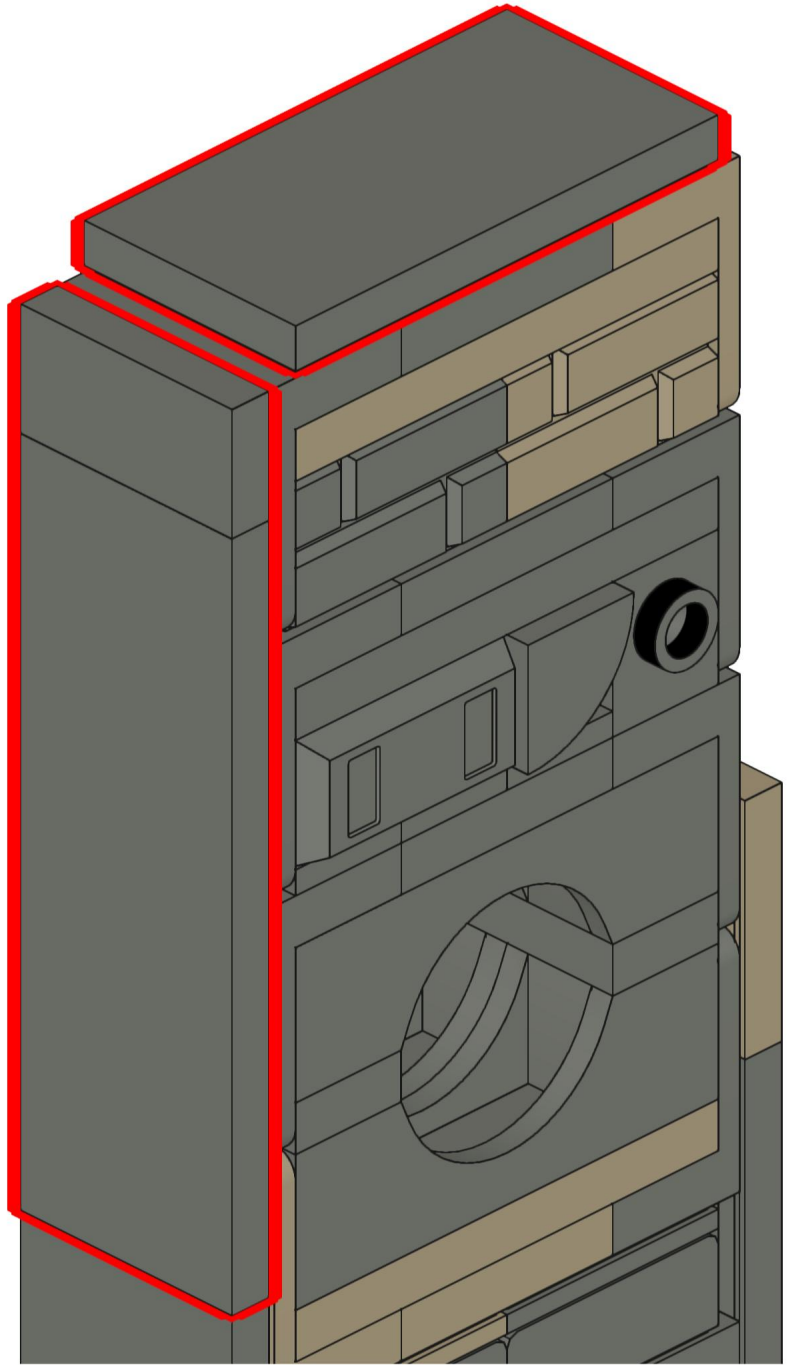

120

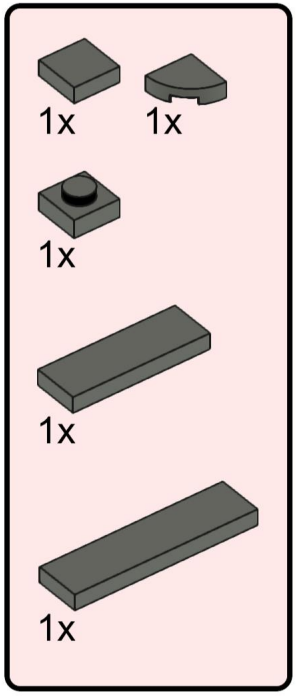

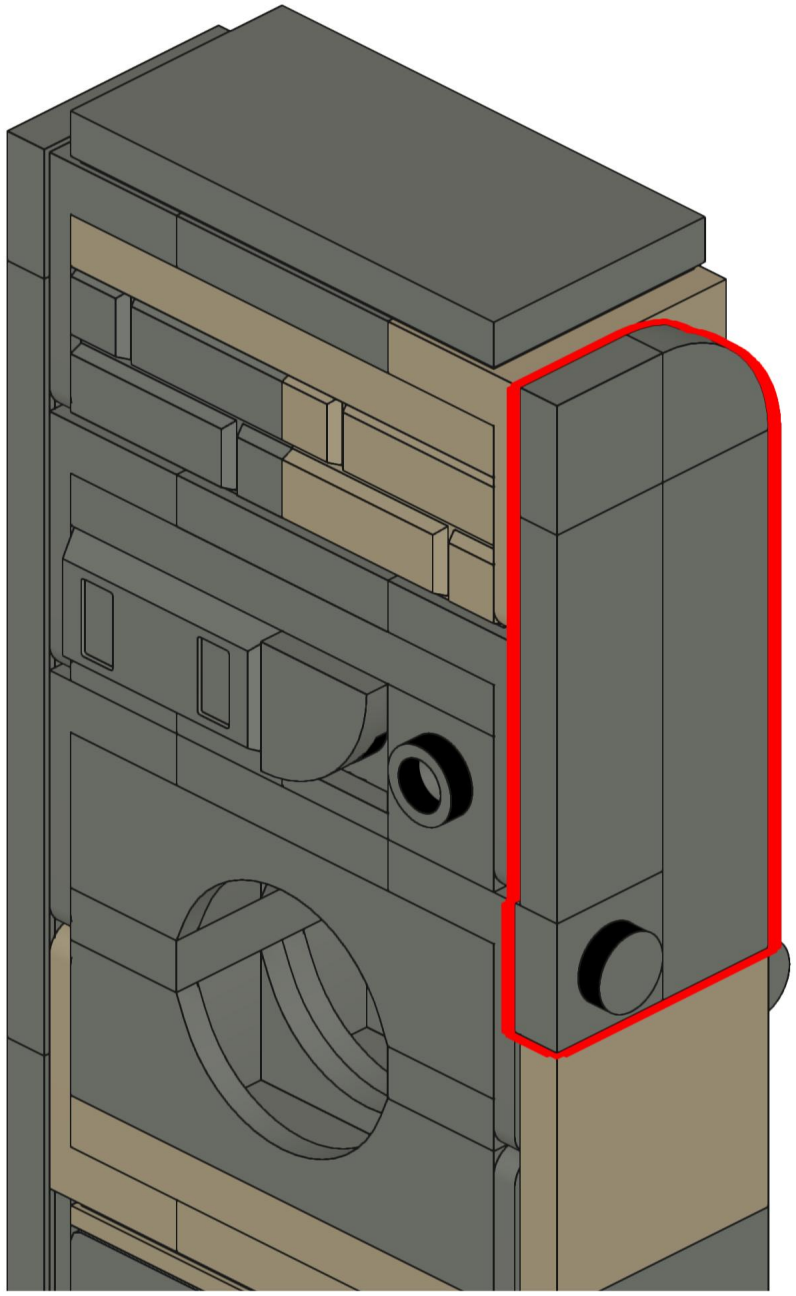

121

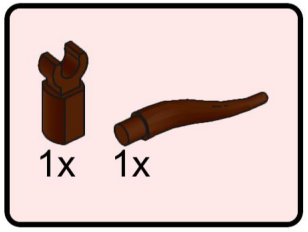

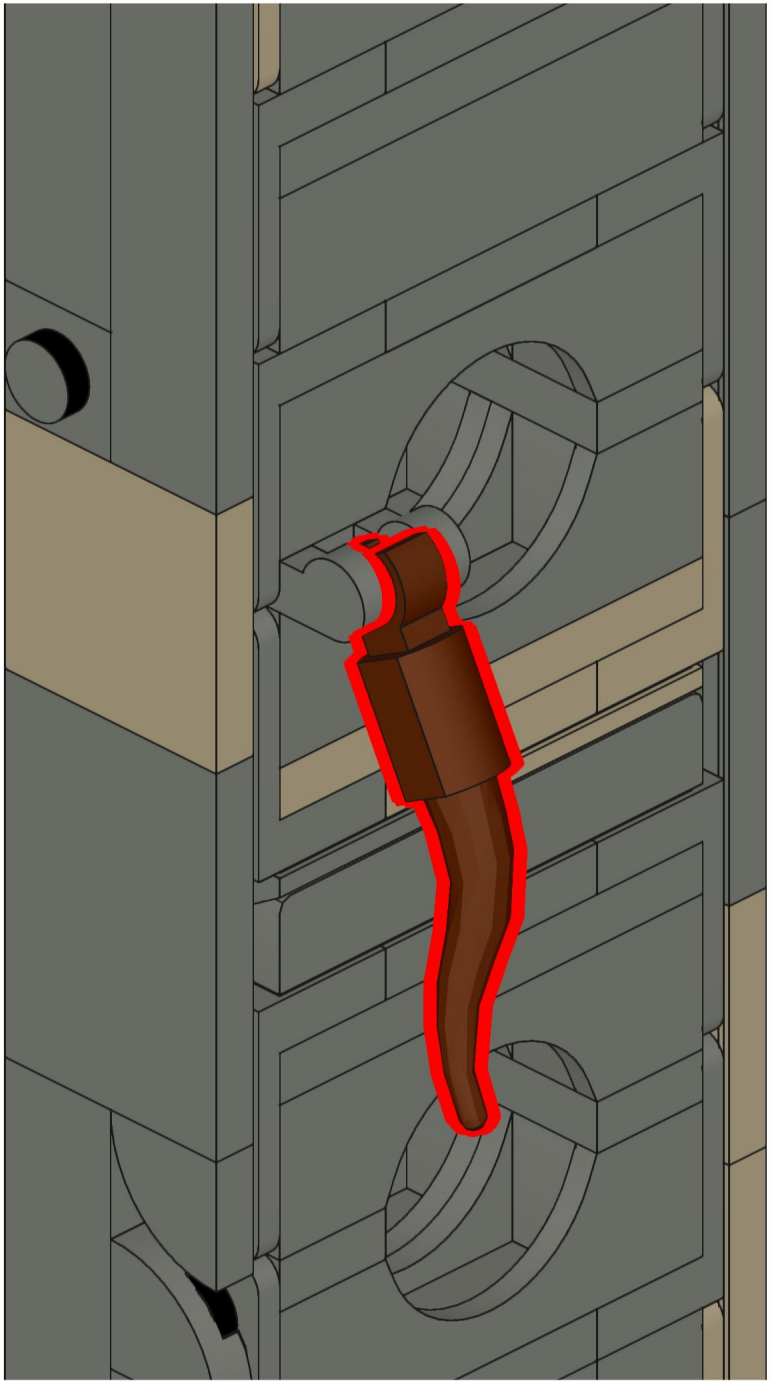

122

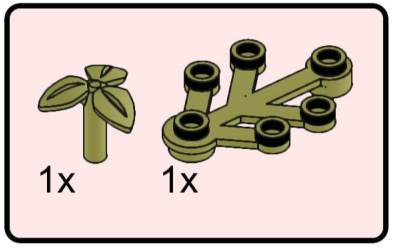

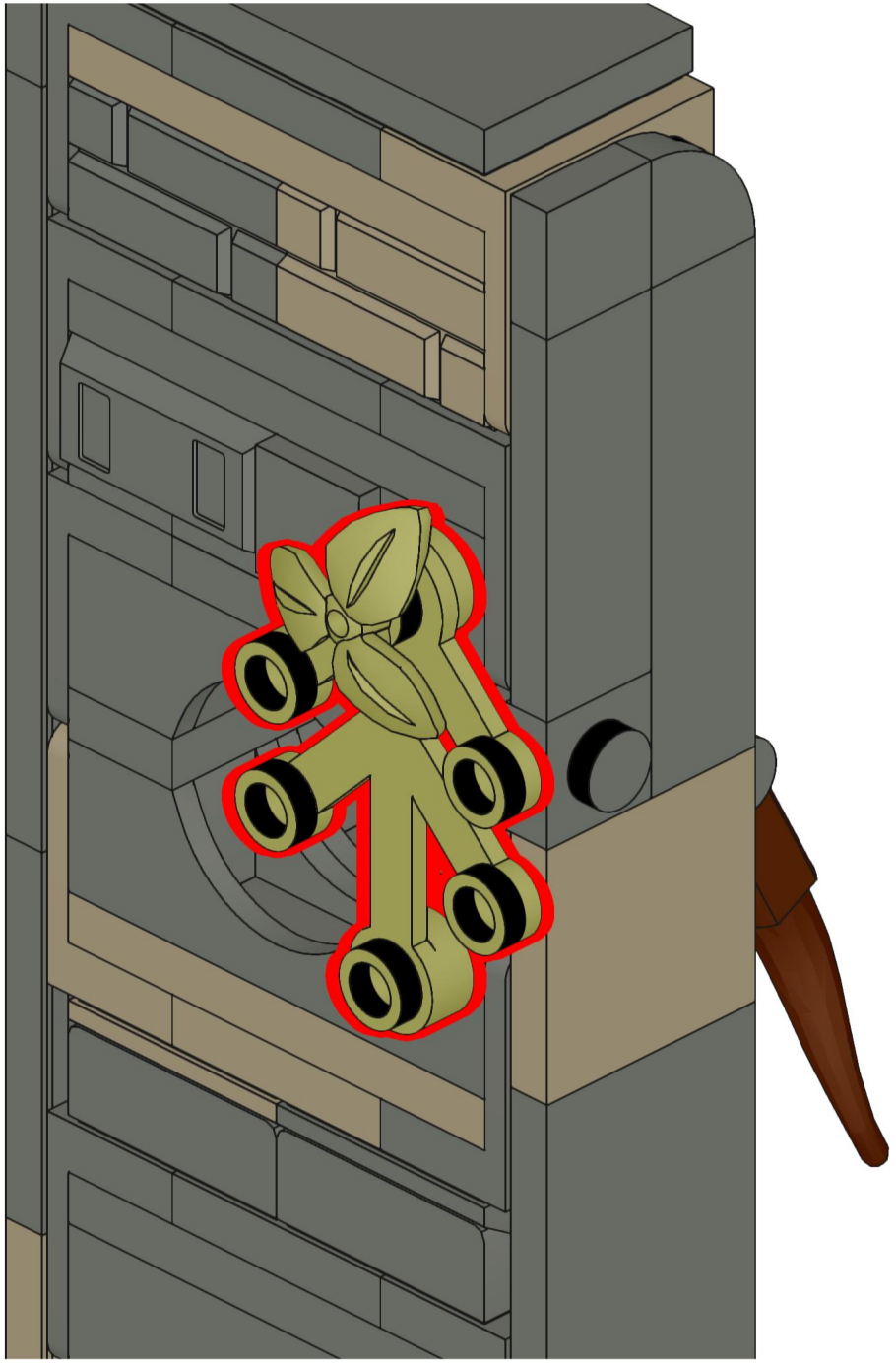

123

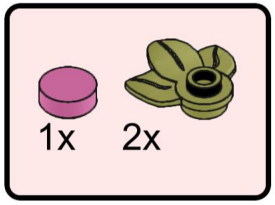

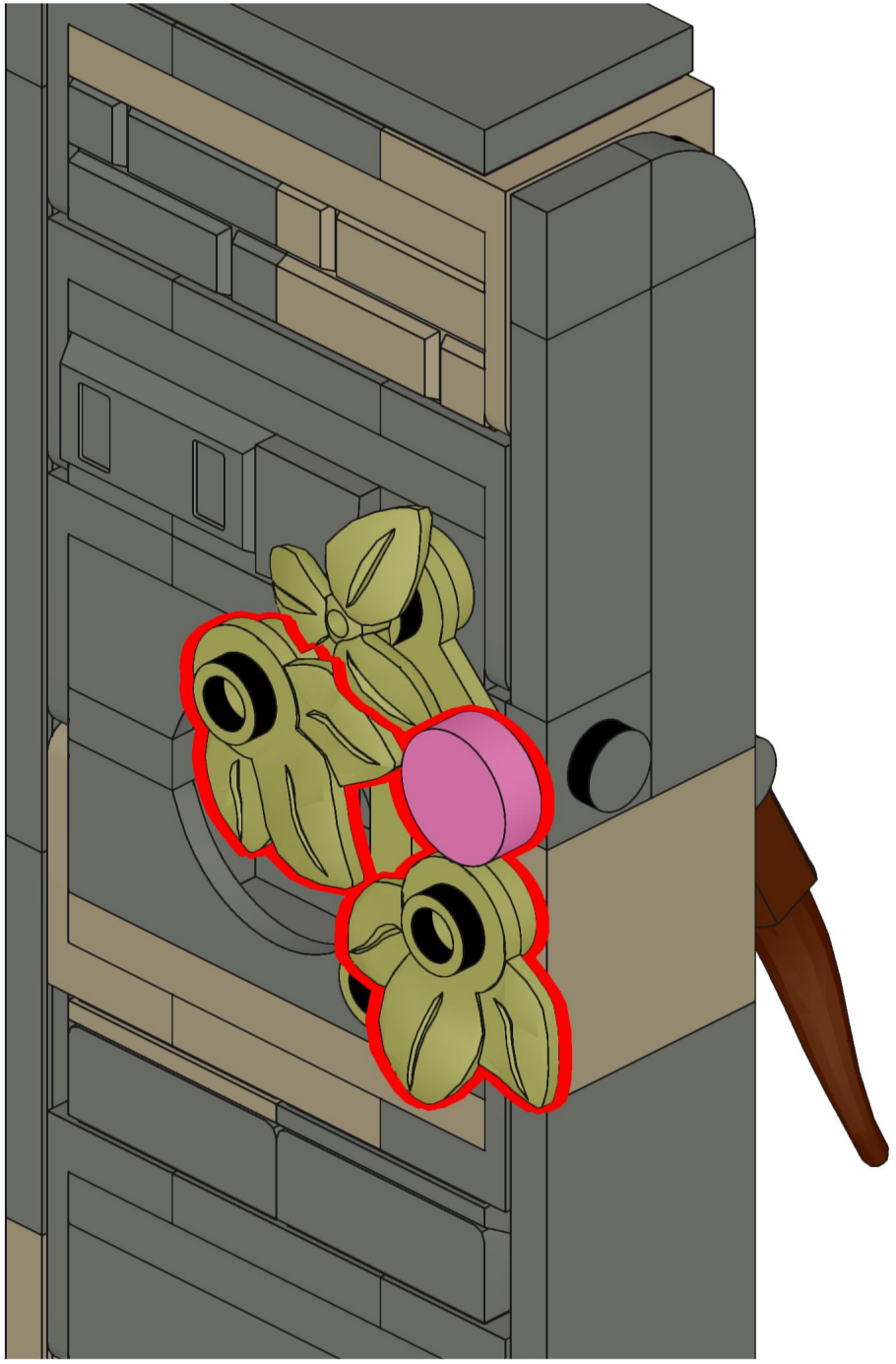

124

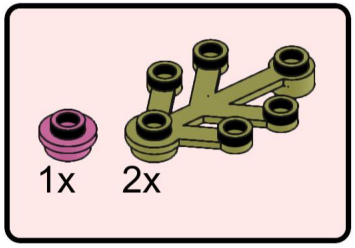

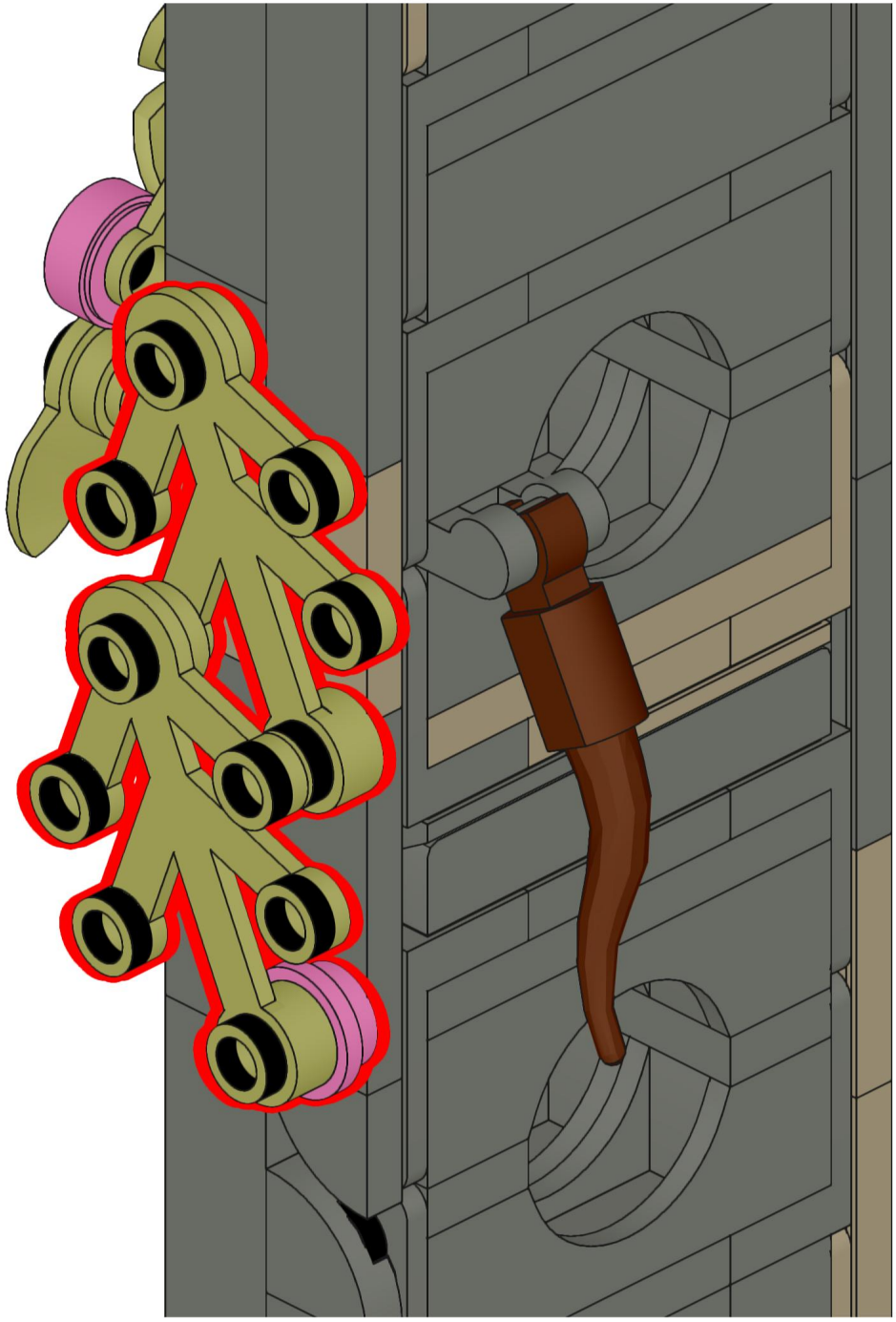

125

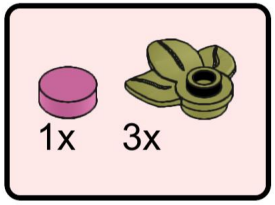

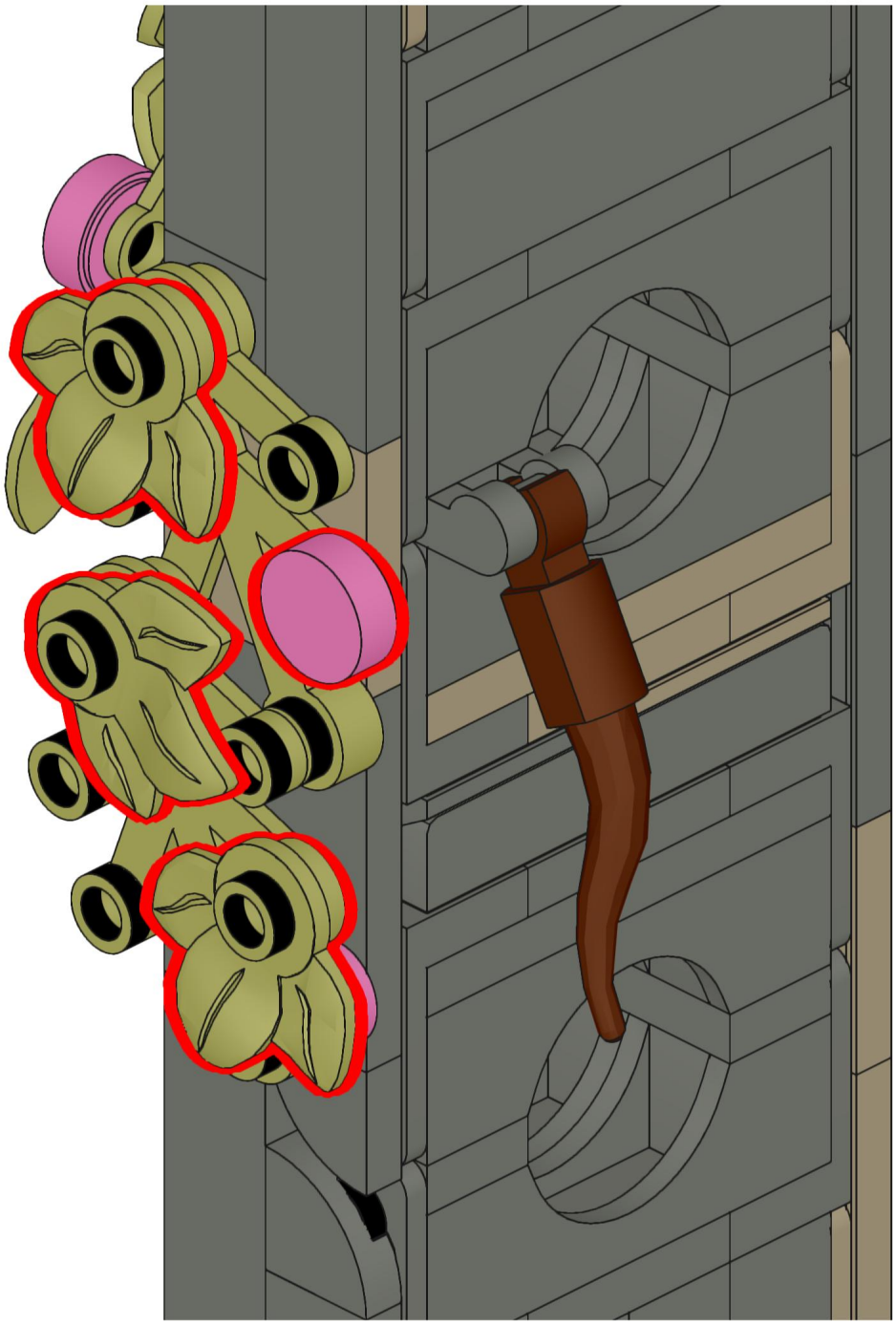

126

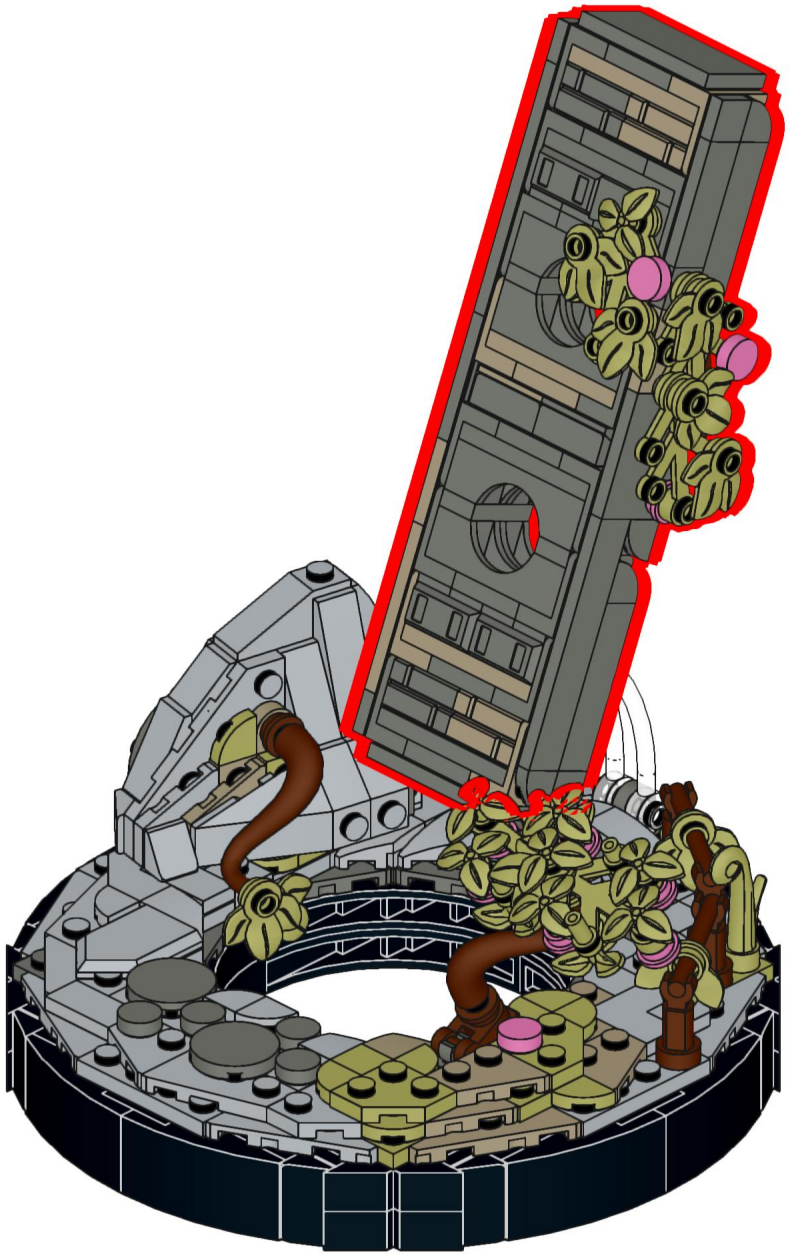



4x
26604
Black

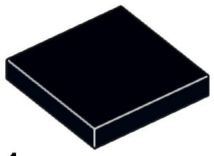

1x
3068
Black



12x
3023
Black

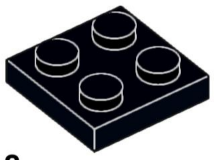

8x
3022
Black

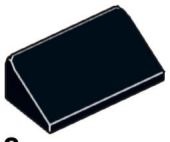

8x
85984
Black

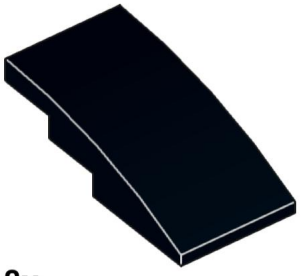

8x
93606
Black



16x
92946
Black

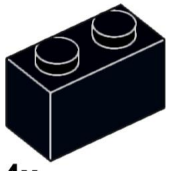

4x
3004
Black

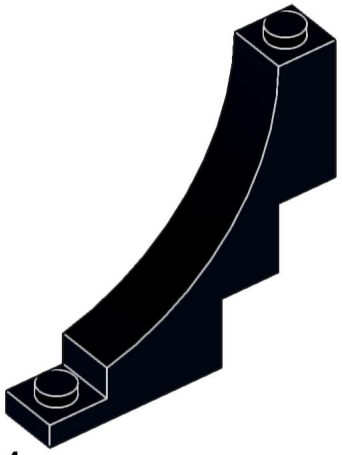

4x
30099
Black

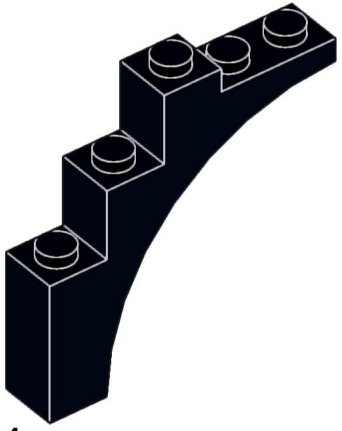

4x
2339
Black

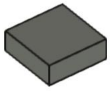

3x
3070
Dark Bluish Gray



6x
25269
Dark Bluish Gray



3x
87087
Dark Bluish Gray



1x
4733
Dark Bluish Gray

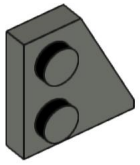

4x
24307
Dark Bluish Gray



4x
98138
Dark Bluish Gray

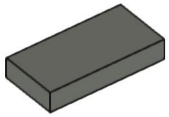

2x
3069
Dark Bluish Gray

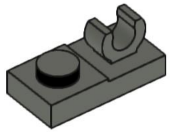

1x
44861
Dark Bluish Gray

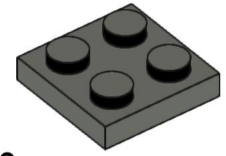

9x
3022
Dark Bluish Gray

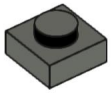

7x
3024
Dark Bluish Gray

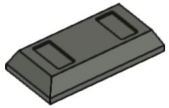

3x
99563
Dark Bluish Gray

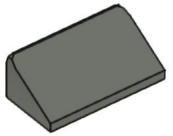

6x
85984
Dark Bluish Gray

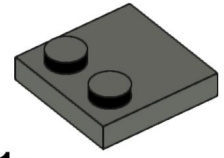

1x
33909
Dark Bluish Gray



1x
20482
Dark Bluish Gray



1x
35480
Dark Bluish Gray

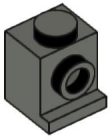

7x
4070
Dark Bluish Gray

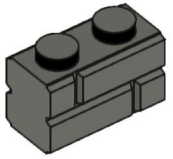

2x
98283
Dark Bluish Gray

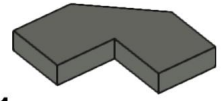

1x
27263
Dark Bluish Gray

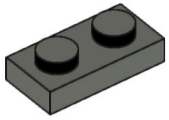

4x
3023
Dark Bluish Gray

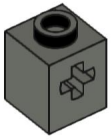

2x
73230
Dark Bluish Gray

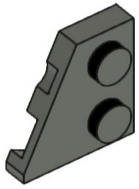

3x
24299
Dark Bluish Gray

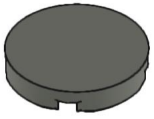

2x
14769
Dark Bluish Gray

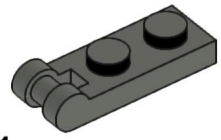

1x
60478
Dark Bluish Gray

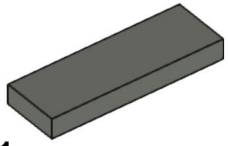

1x
63864
Dark Bluish Gray

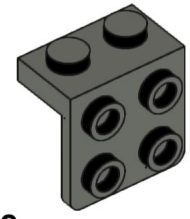

12x
44728
Dark Bluish Gray

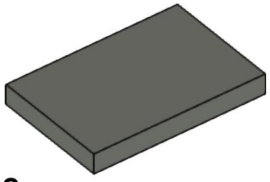

2x
26603
Dark Bluish Gray

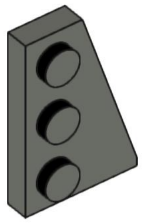

1x
43722
Dark Bluish Gray

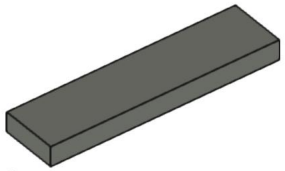

2x
2431
Dark Bluish Gray

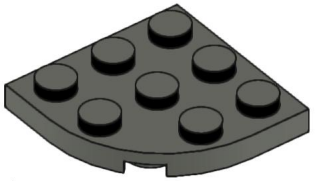

1x
30357
Dark Bluish Gray

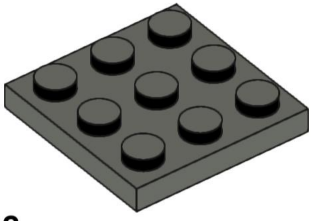

2x
11212
Dark Bluish Gray

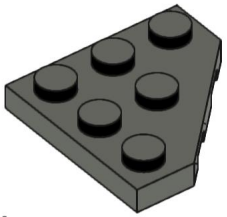

1x
2450
Dark Bluish Gray

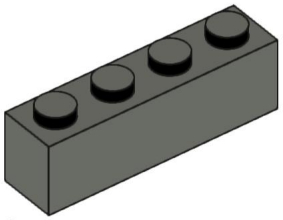

3x
3010
Dark Bluish Gray

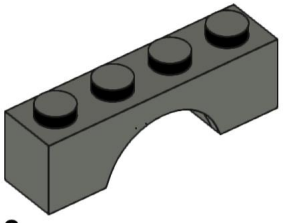

8x
3659
Dark Bluish Gray

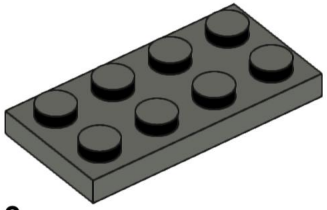

3x
3020
Dark Bluish Gray

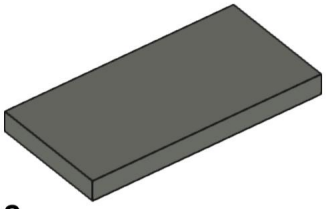

2x
87079
Dark Bluish Gray

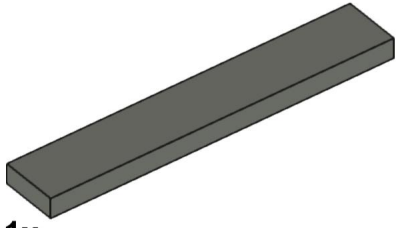

1x
6636
Dark Bluish Gray

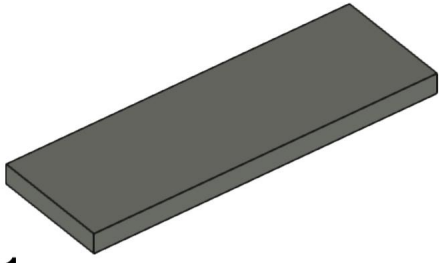

1x
69729
Dark Bluish Gray

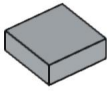

2x
3070
Light Bluish Gray



8x
25269
Light Bluish Gray

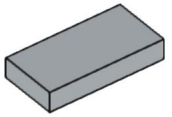

2x
3069
Light Bluish Gray

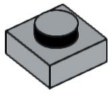

4x
3024
Light Bluish Gray

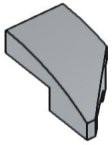

7x
29120
Light Bluish Gray

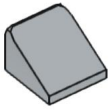

3x
54200
Light Bluish Gray

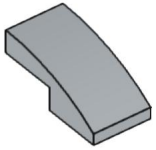

2x
11477
Light Bluish Gray

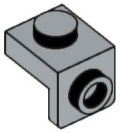

1x
36841
Light Bluish Gray



1x
4733
Light Bluish Gray

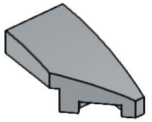

2x
29119
Light Bluish Gray

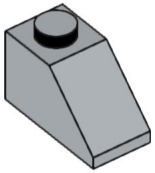

2x
3040
Light Bluish Gray

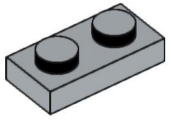

9x
3023
Light Bluish Gray

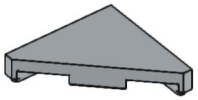

1x
35787
Light Bluish Gray

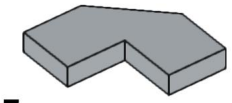

7x
27263
Light Bluish Gray

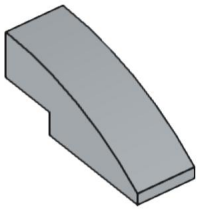

1x
50950
Light Bluish Gray

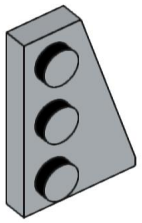

2x
43722
Light Bluish Gray

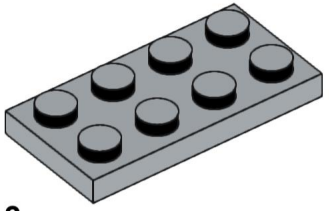

3x
3020
Light Bluish Gray

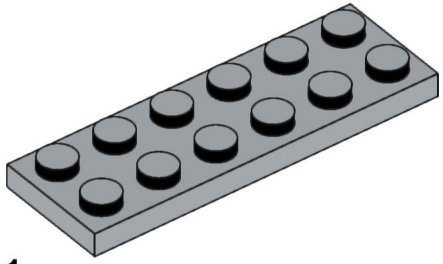

1x
3795
Light Bluish Gray

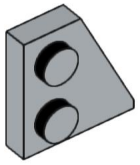

2x
24307
Light Bluish Gray

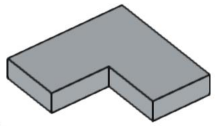

2x
14719
Light Bluish Gray

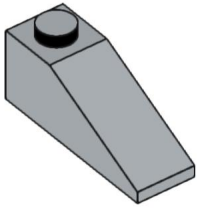

3x
4286
Light Bluish Gray

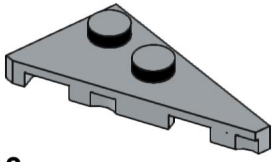

3x
65426
Light Bluish Gray

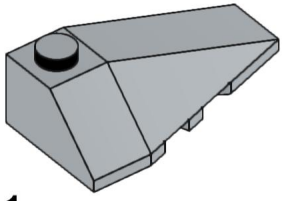

1x
43711
Light Bluish Gray



3x
98138
Dark Pink

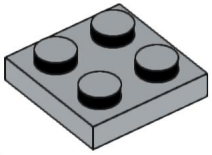

3x
3022
Light Bluish Gray

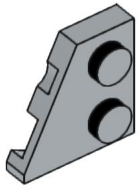

1x
24299
Light Bluish Gray



7x
85861
Dark Pink

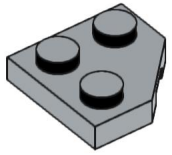

4x
26601
Light Bluish Gray

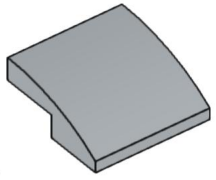

1x
15068
Light Bluish Gray

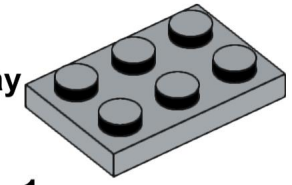

1x
3021
Light Bluish Gray

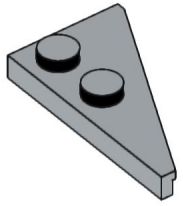

3x
65429
Light Bluish Gray

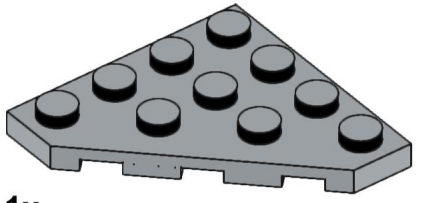

1x
30503
Light Bluish Gray

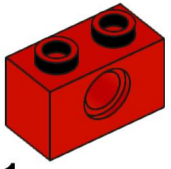

1x
3700
Red

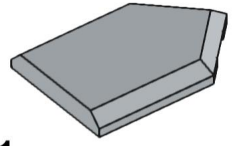

1x
22385
Light Bluish Gray

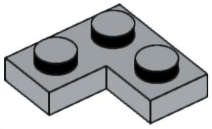

2x
2420
Light Bluish Gray

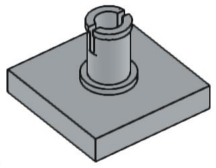

1x
2460
Light Bluish Gray

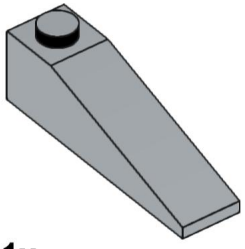

1x
60477
Light Bluish Gray

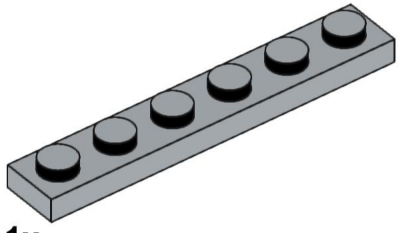

1x
3666
Light Bluish Gray

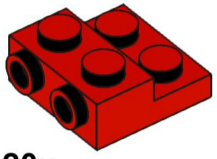

20x
99206
Red

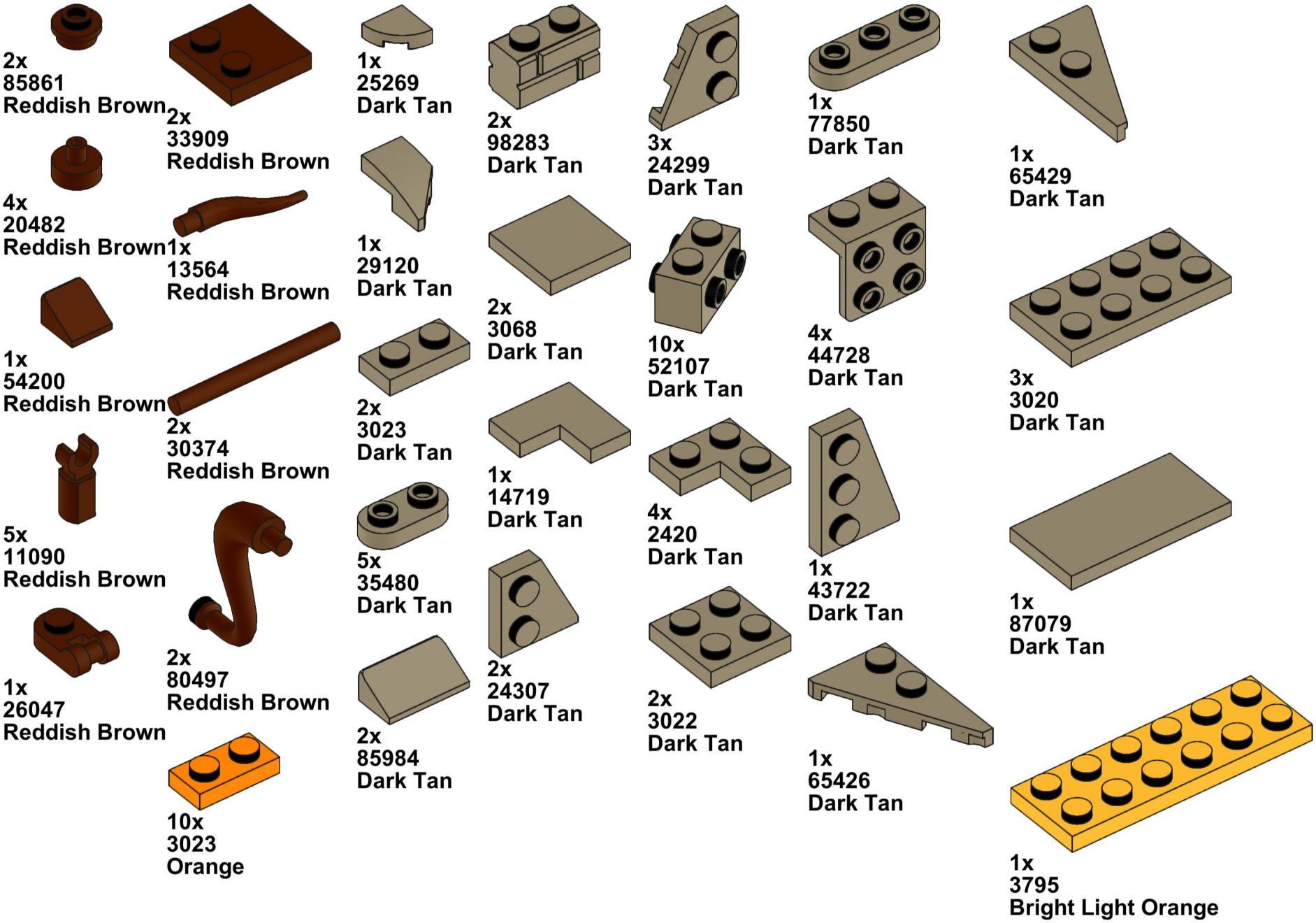
2x
85861
Reddish Brown
2x
33909
Reddish Brown
4x
20482
Reddish Brown
1x
13564
Reddish Brown
1x
54200
Reddish Brown
2x
30374
Reddish Brown
5x
11090
Reddish Brown
2x
80497
Reddish Brown
1x
26047
Reddish Brown
10x
3023
Orange
1x
25269
Dark Tan
1x
29120
Dark Tan
2x
3023
Dark Tan
5x
35480
Dark Tan
2x
85984
Dark Tan
2x
98283
Dark Tan
2x
3068
Dark Tan
1x
14719
Dark Tan
2x
24307
Dark Tan
3x
24299
Dark Tan
10x
52107
Dark Tan
4x
2420
Dark Tan
2x
3022
Dark Tan
1x
77850
Dark Tan
4x
44728
Dark Tan
1x
43722
Dark Tan
1x
65426
Dark Tan
1x
65429
Dark Tan
3x
3020
Dark Tan
1x
87079
Dark Tan
1x
3795
Bright Light Orange

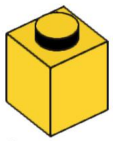

2x
3005
Yellow



10x
87087
Yellow

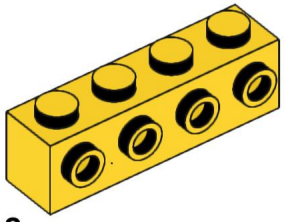

2x
30414
Yellow



9x
25269
Olive Green



2x
3070
Olive Green

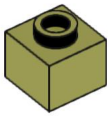

2x
86996
Olive Green

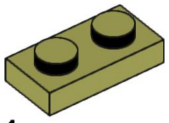

1x
3023
Olive Green



11x
32607
Olive Green

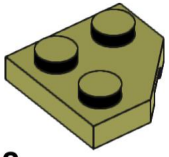

2x
26601
Olive Green

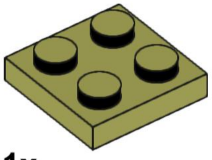

1x
3022
Olive Green



12x
37695
Olive Green



1x
15279
Olive Green

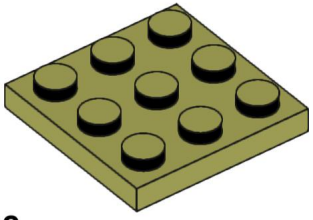

2x
11212
Olive Green

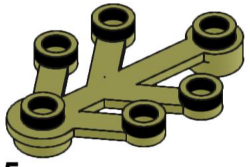

5x
2423
Olive Green

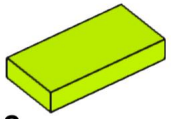

2x
3069
Lime

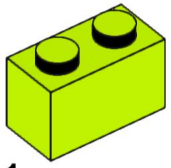

1x
3004
Lime

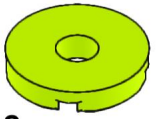

2x
15535
Lime

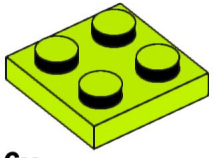

6x
3022
Lime

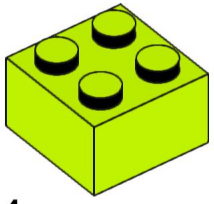

4x
3003
Lime

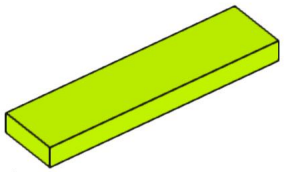

1x
2431
Lime

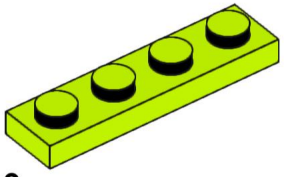

9x
3710
Lime

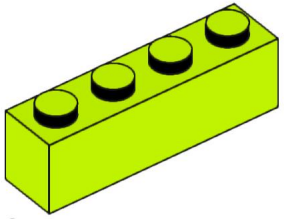

2x
3010
Lime



4x
20482
Yellowish Green

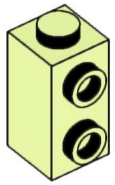

4x
32952
Yellowish Green

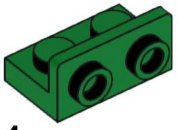

4x
99780
Green

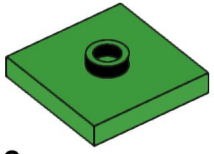

2x
87580
Bright Green



10x
3386
Light Aqua

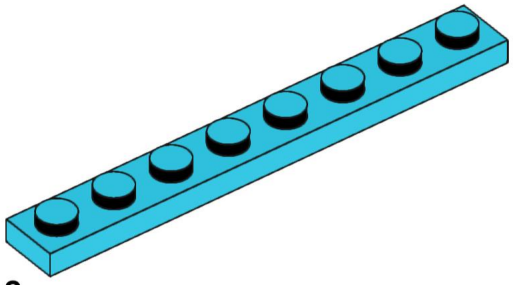

2x
3460
Medium Azure

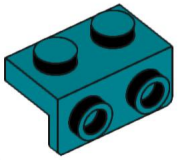

2x
99781
Dark Turquoise

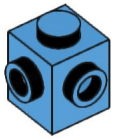

4x
26604
Medium Blue

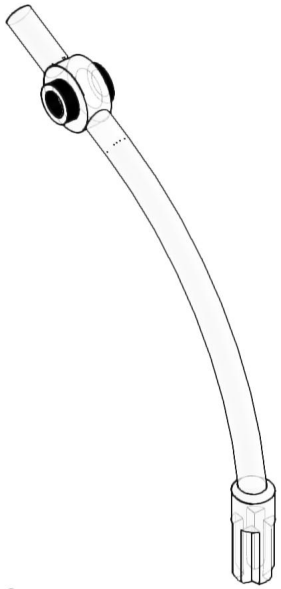

2x
4042
Trans-Clear