1



2

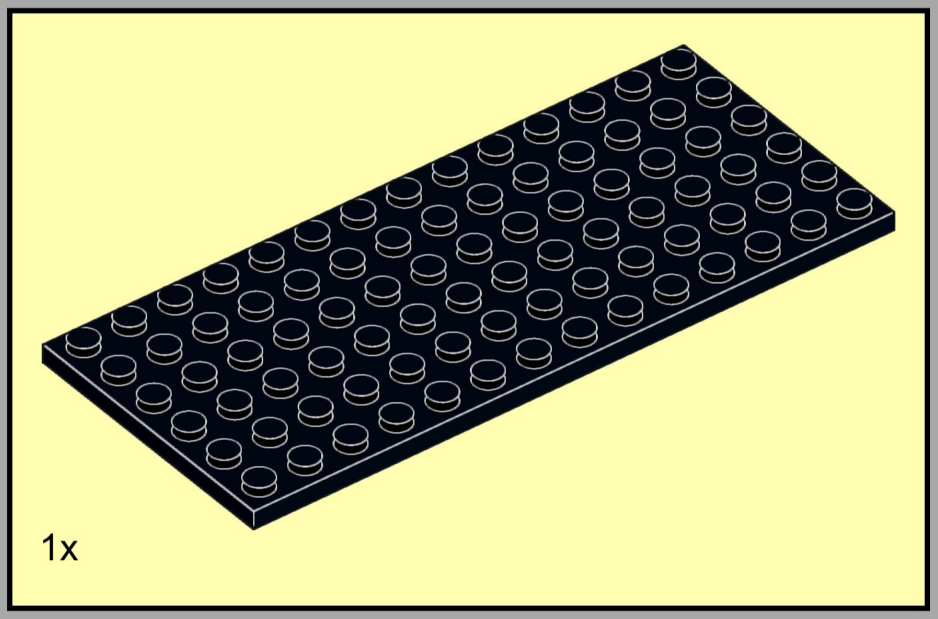

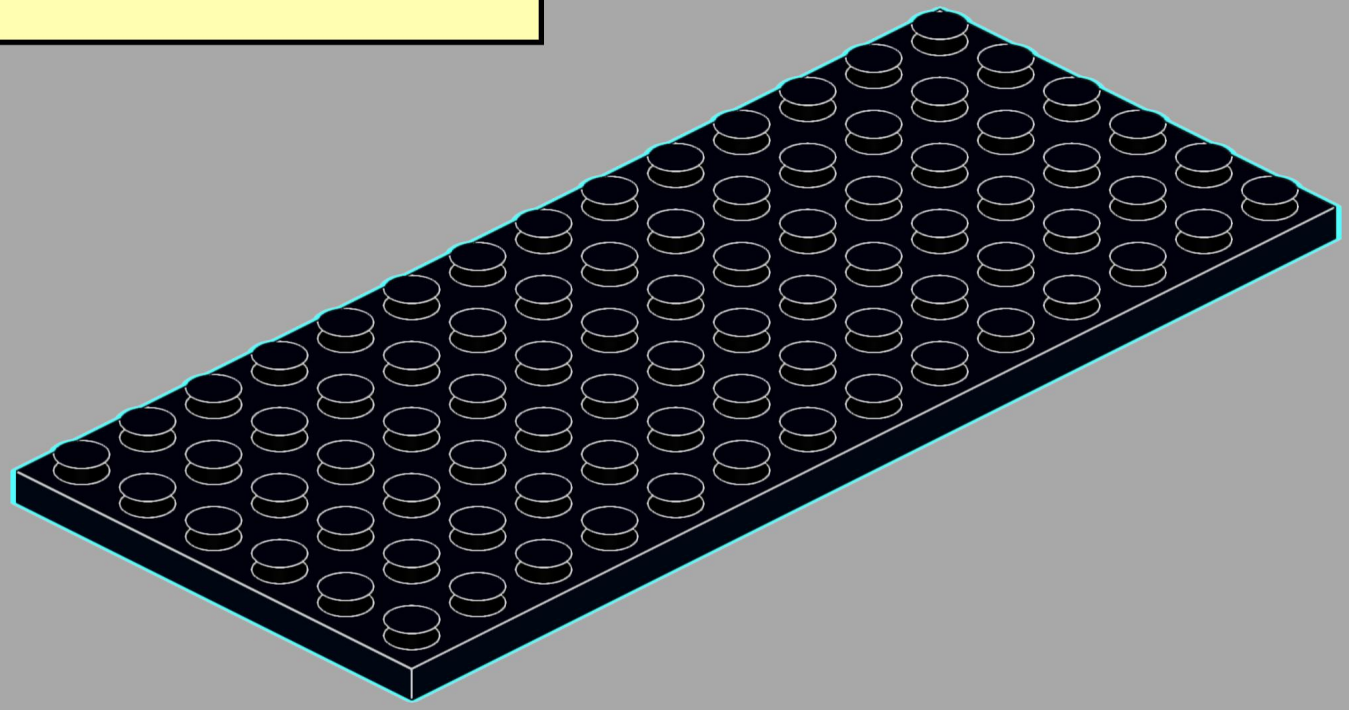

3

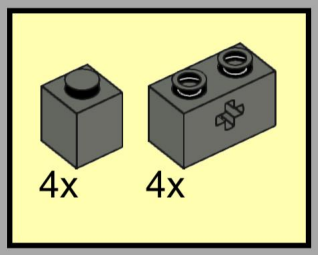

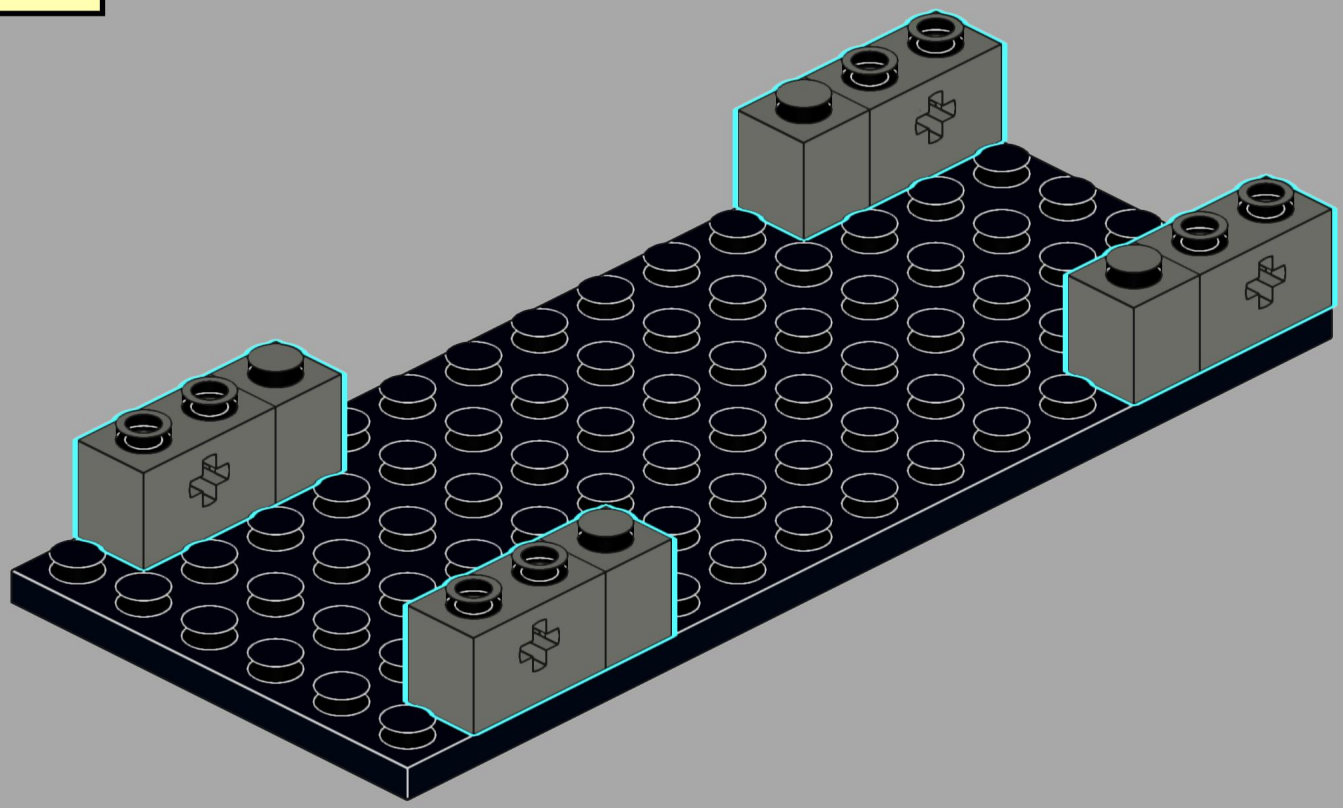

4

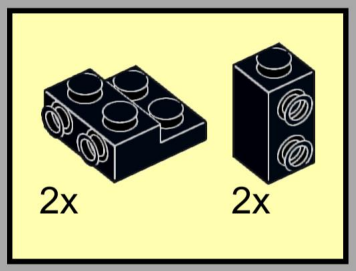

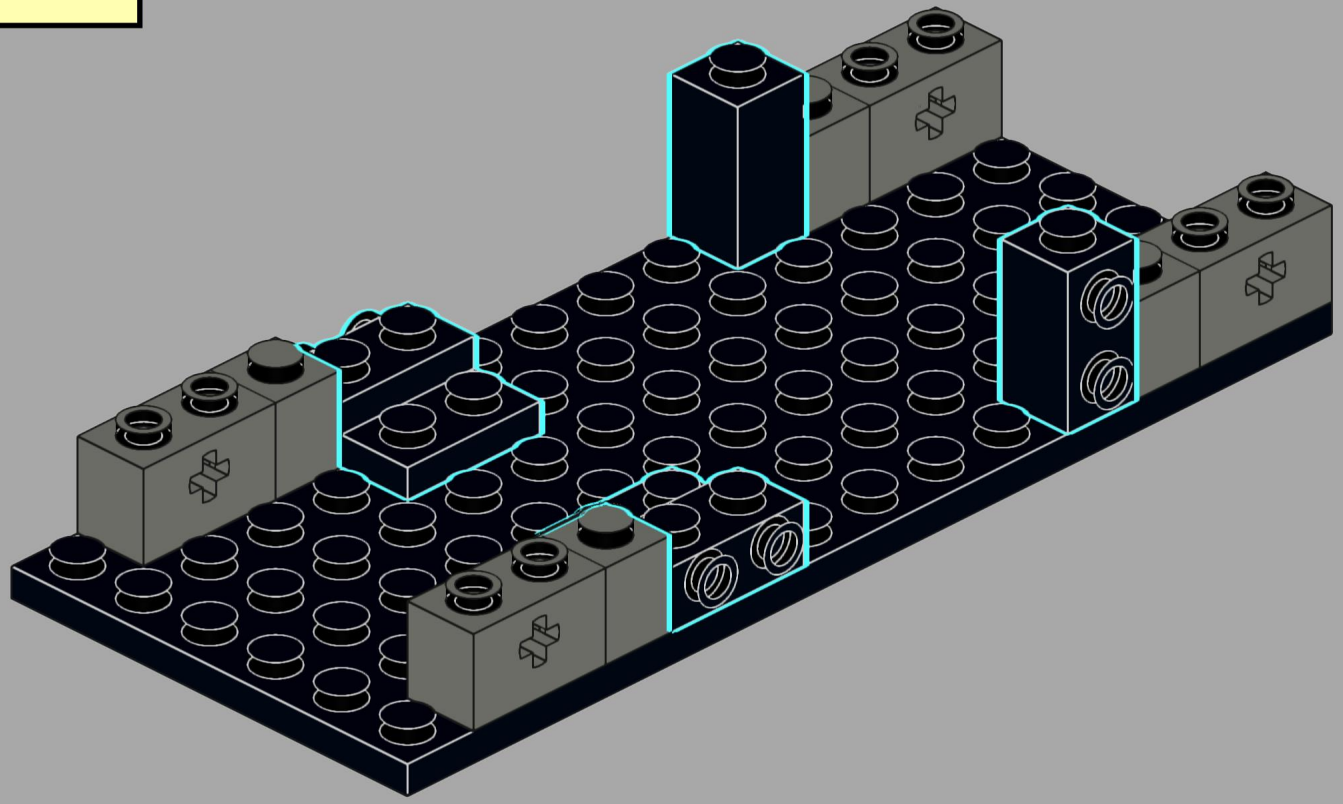

5

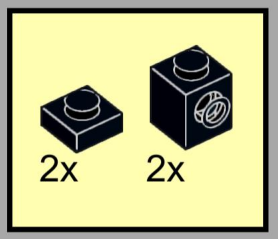

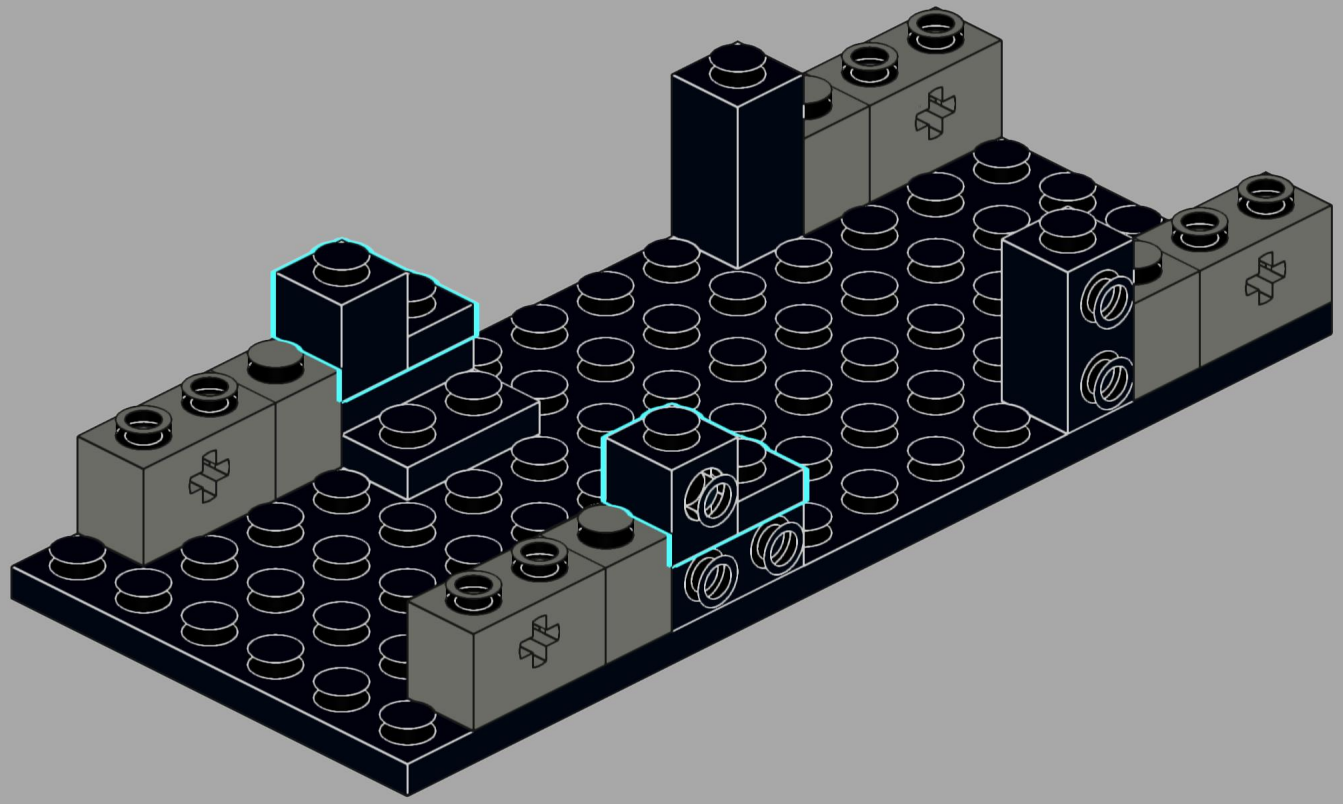

6

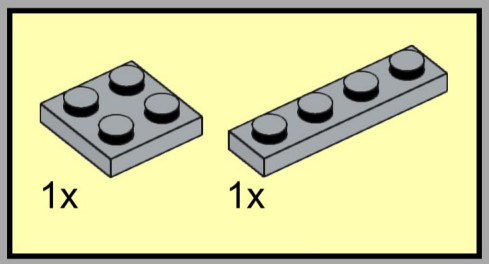

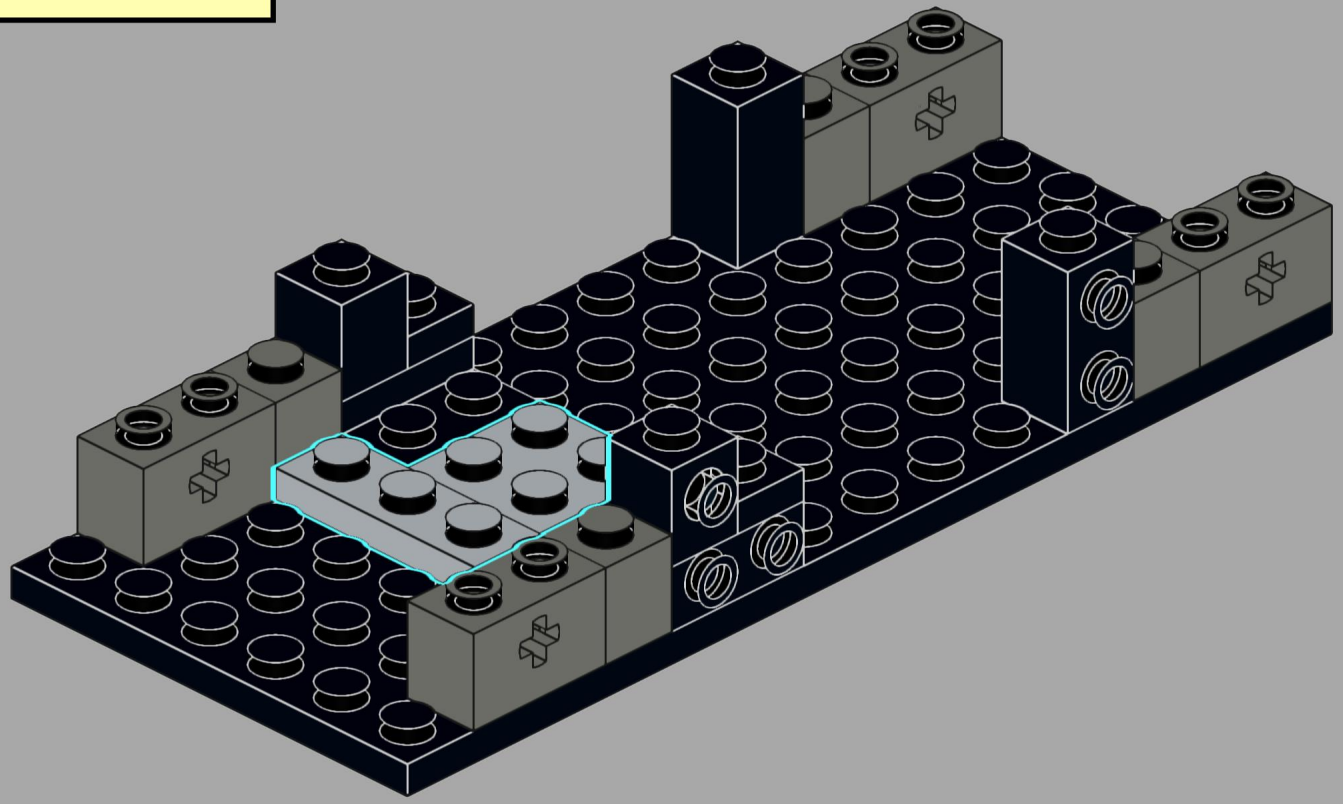

7

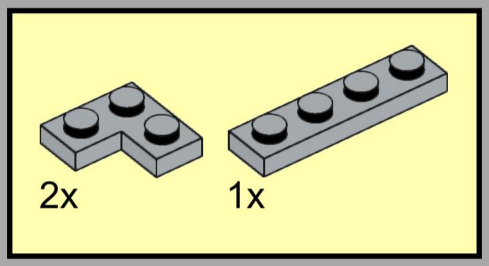

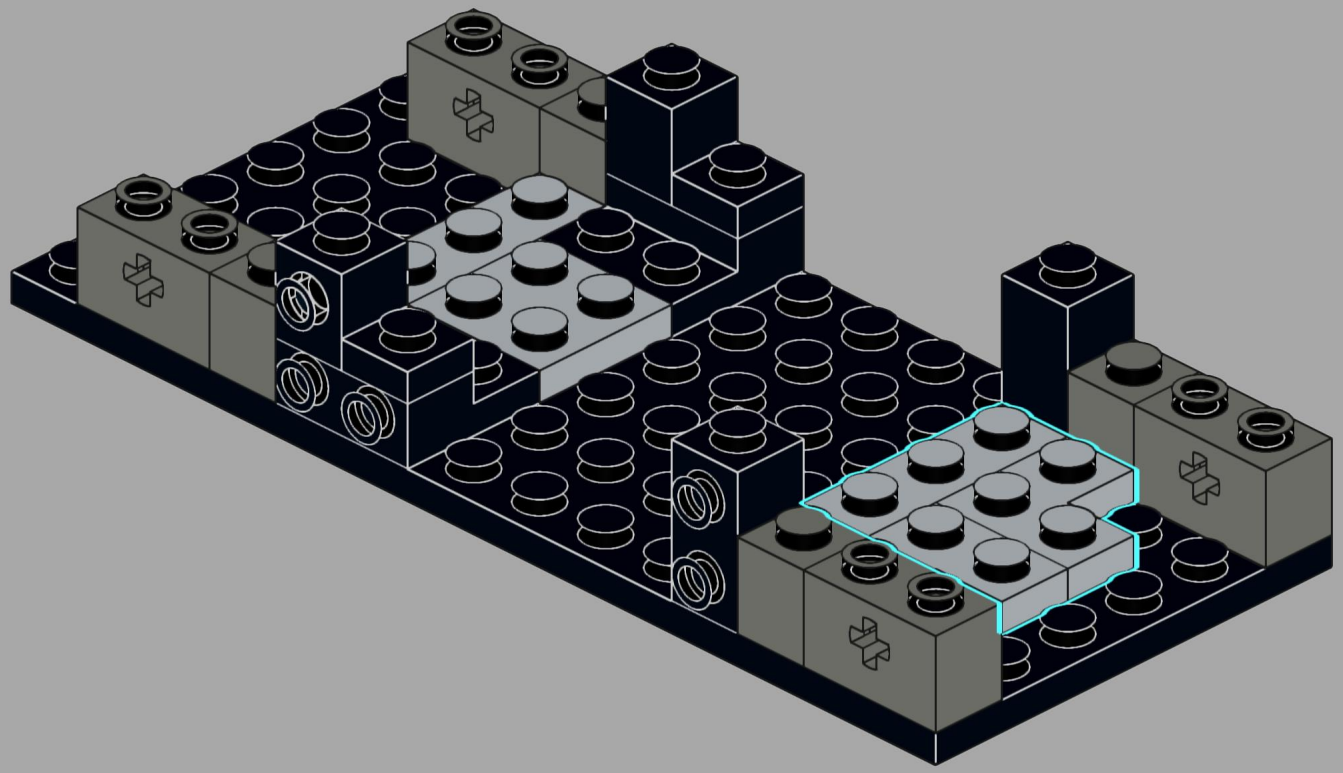

8

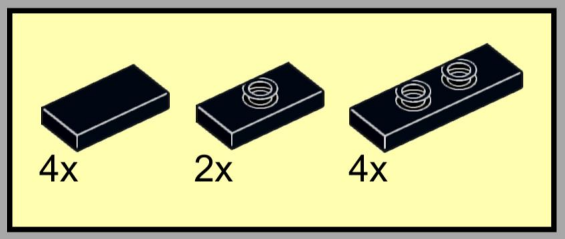

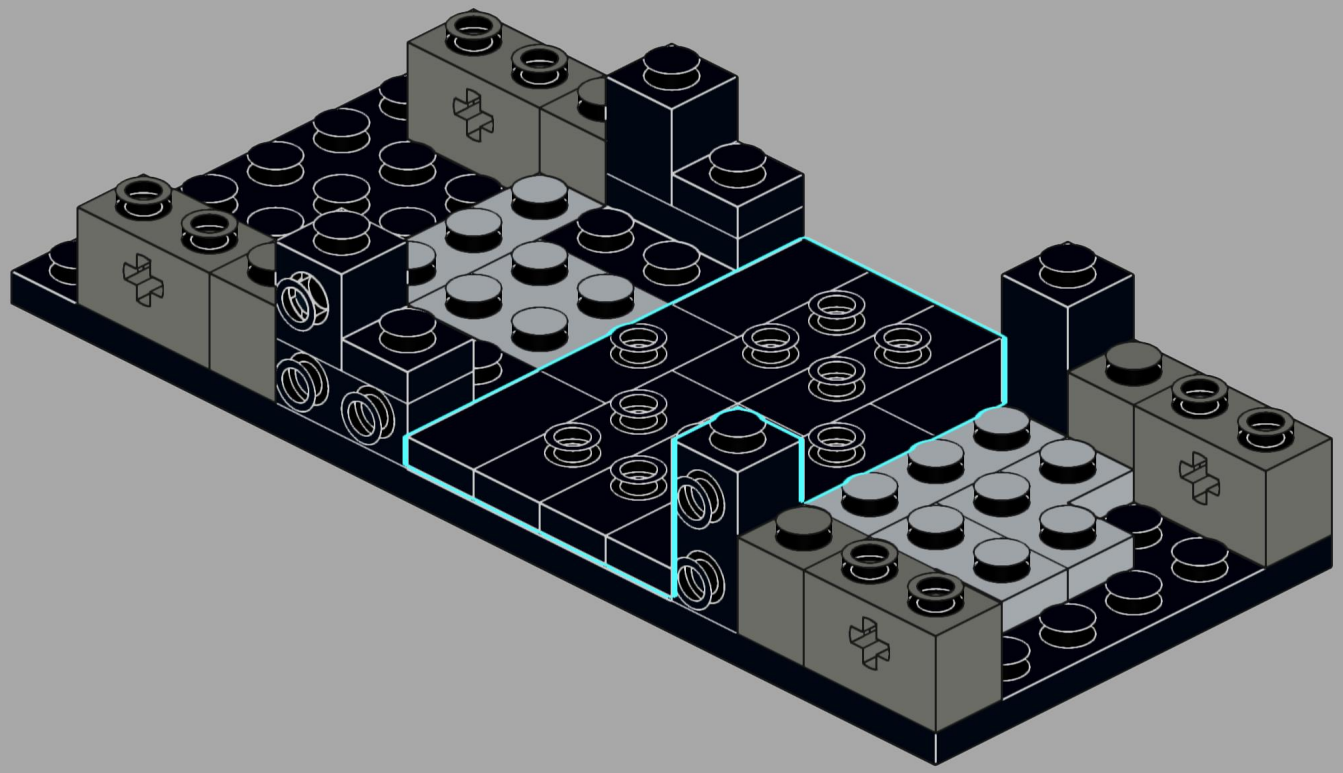

9

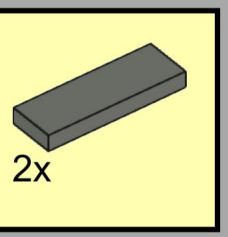

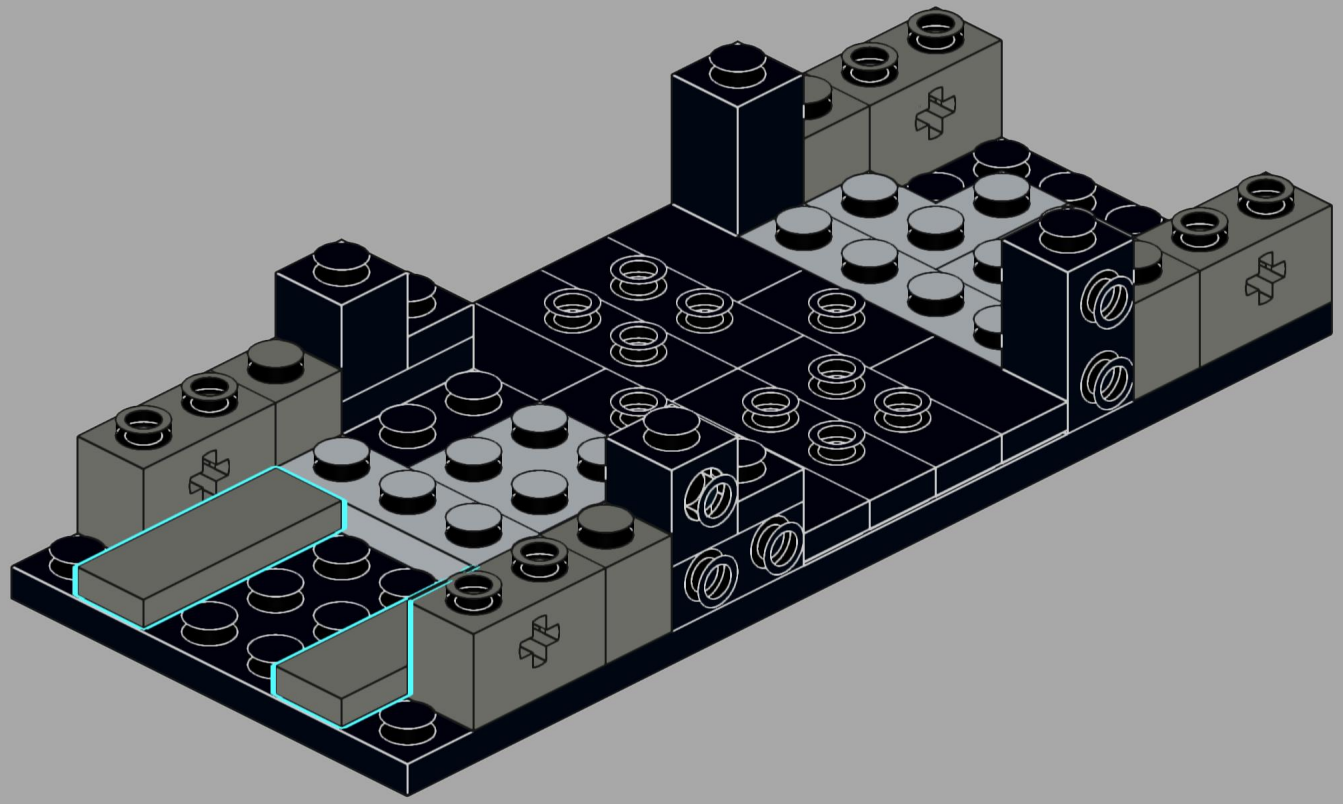

10

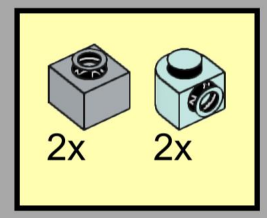

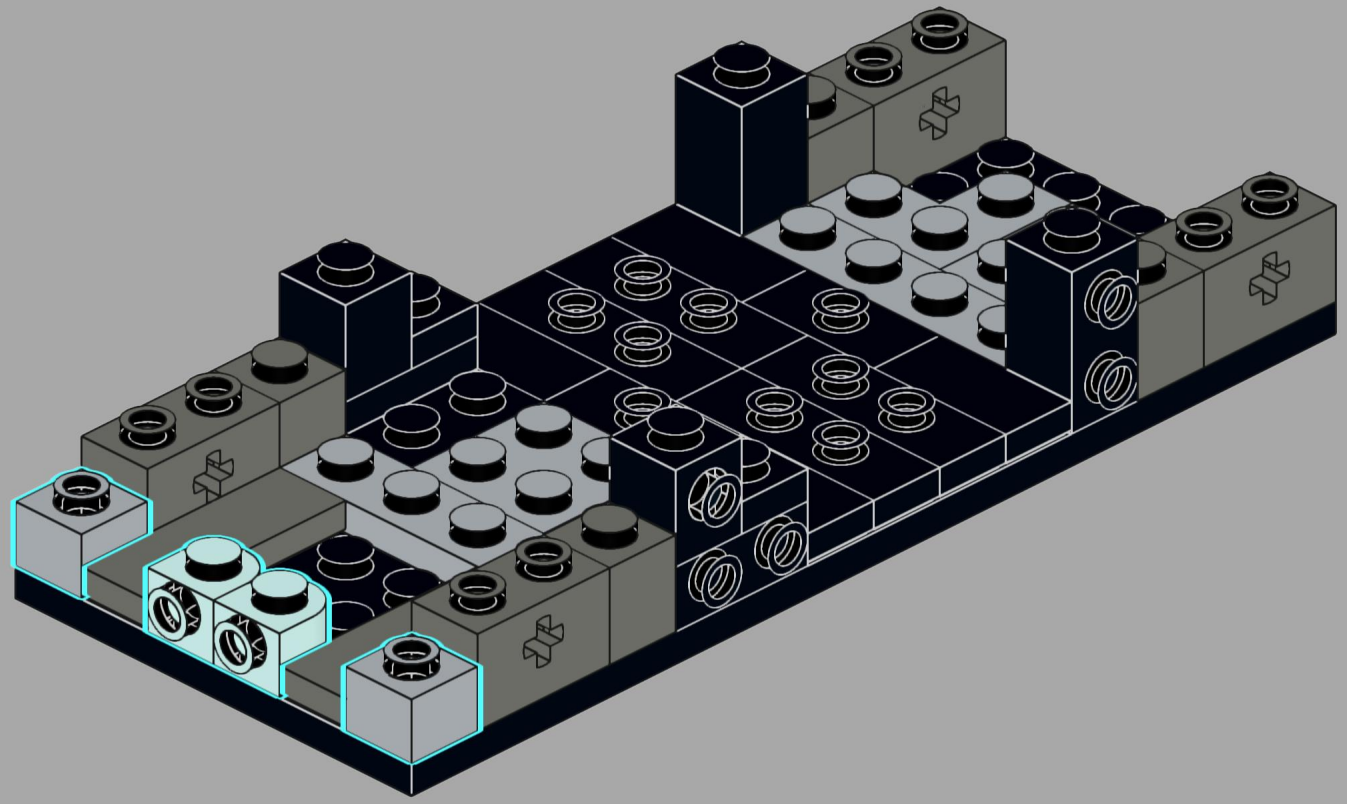

11

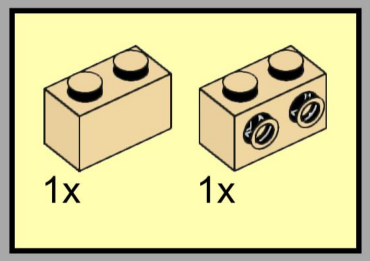

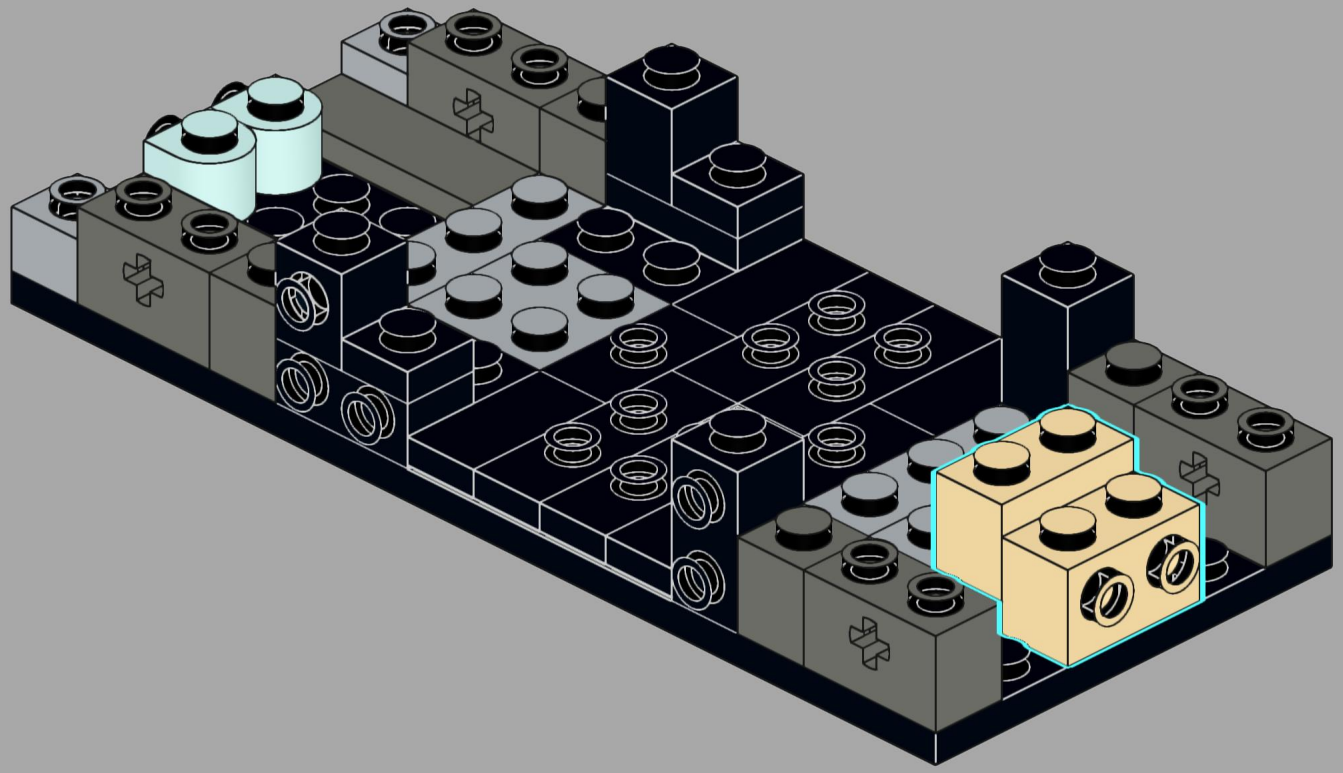

12

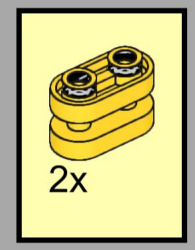

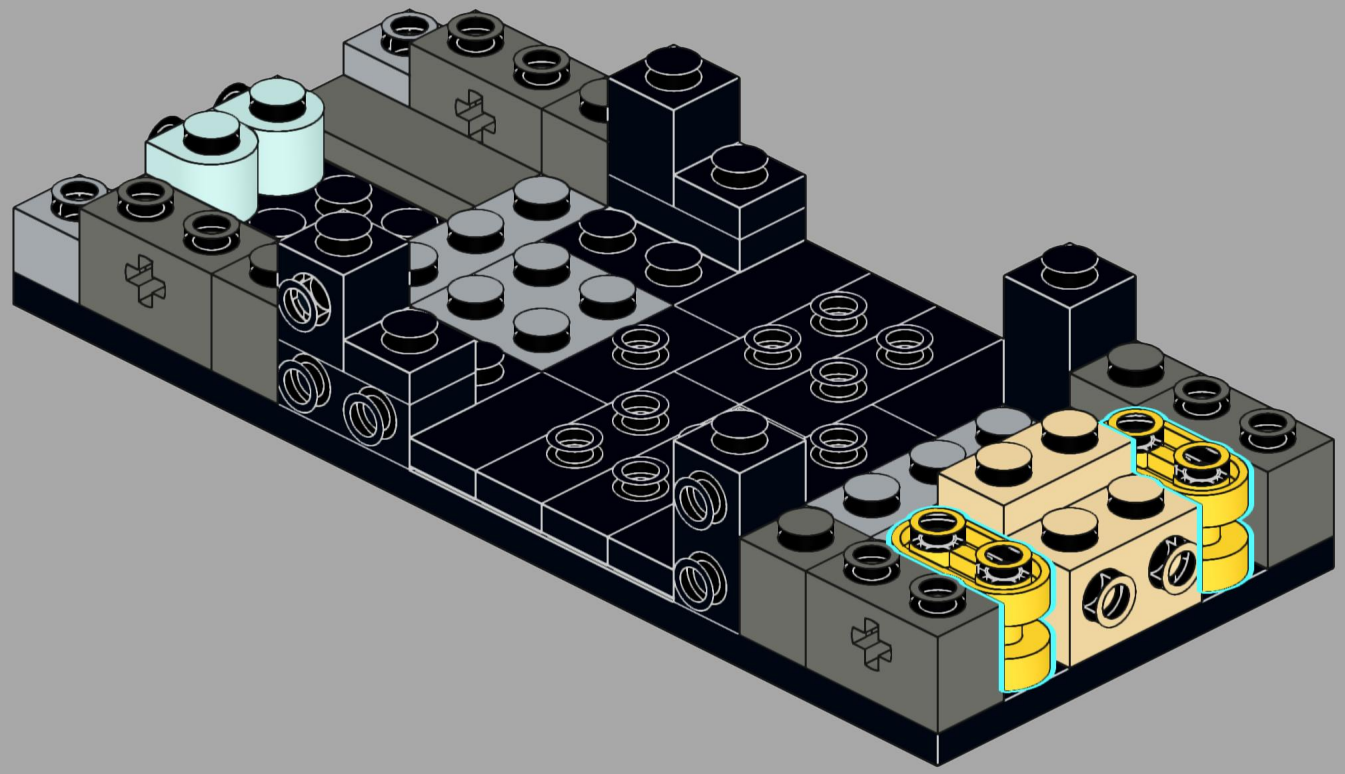

13

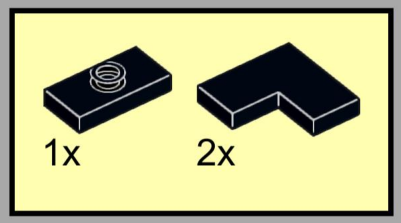

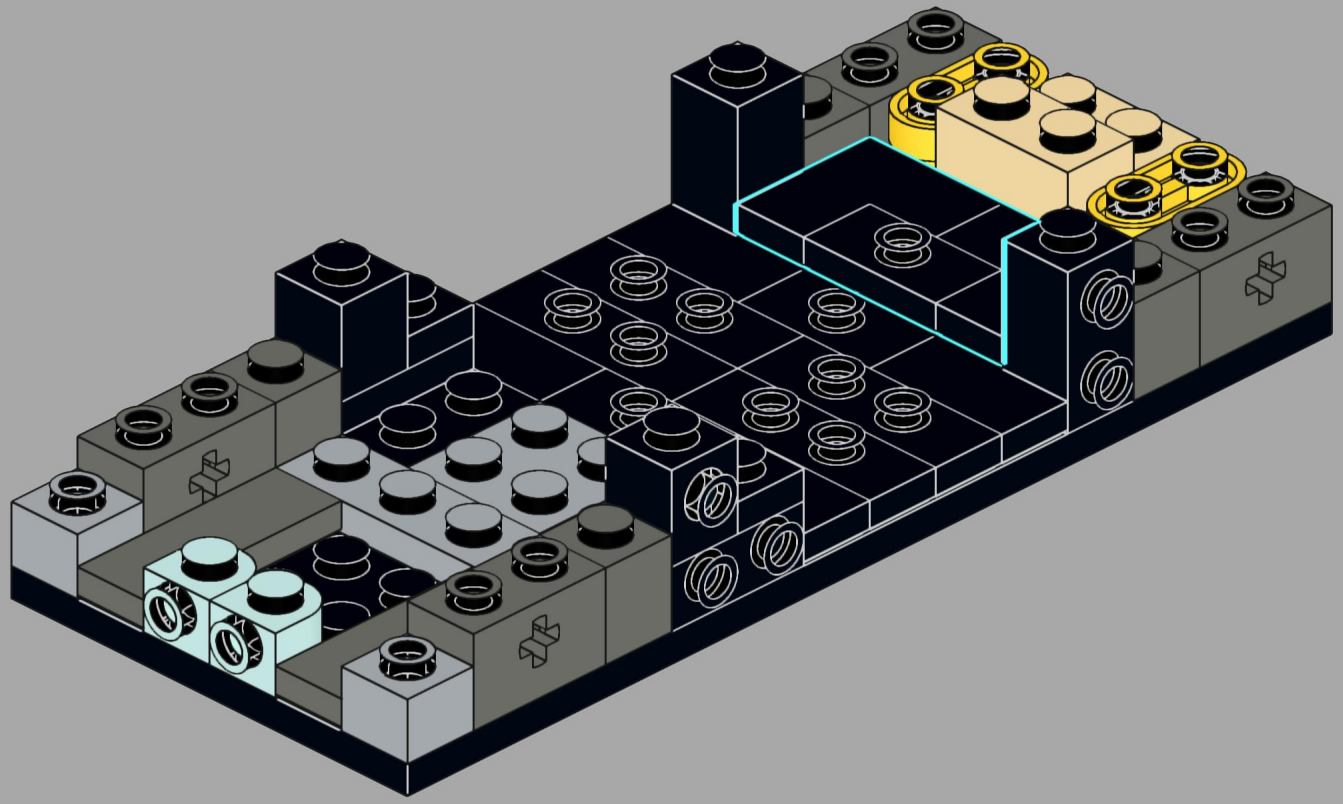

14

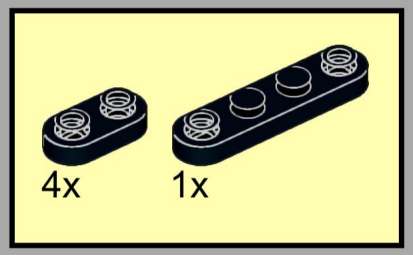

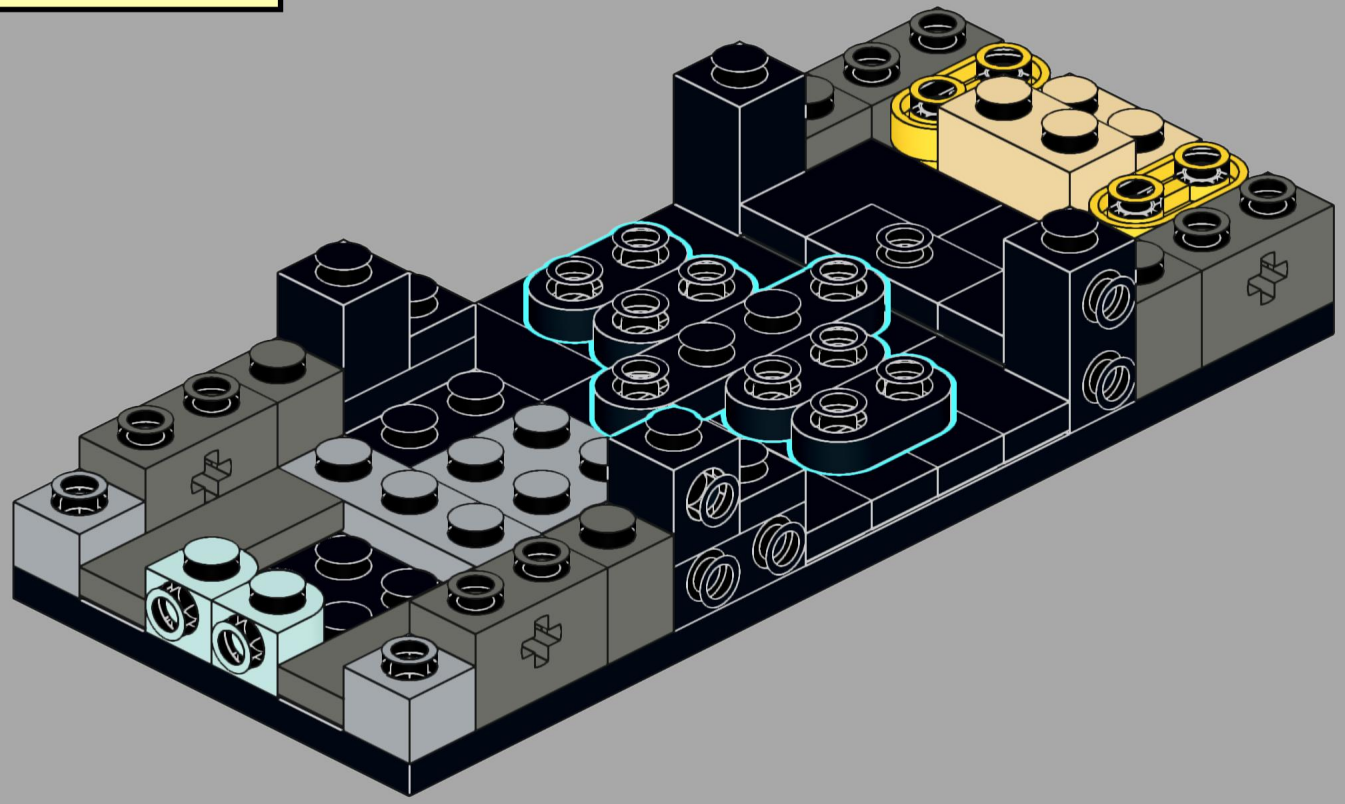

15

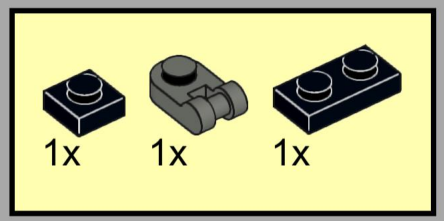

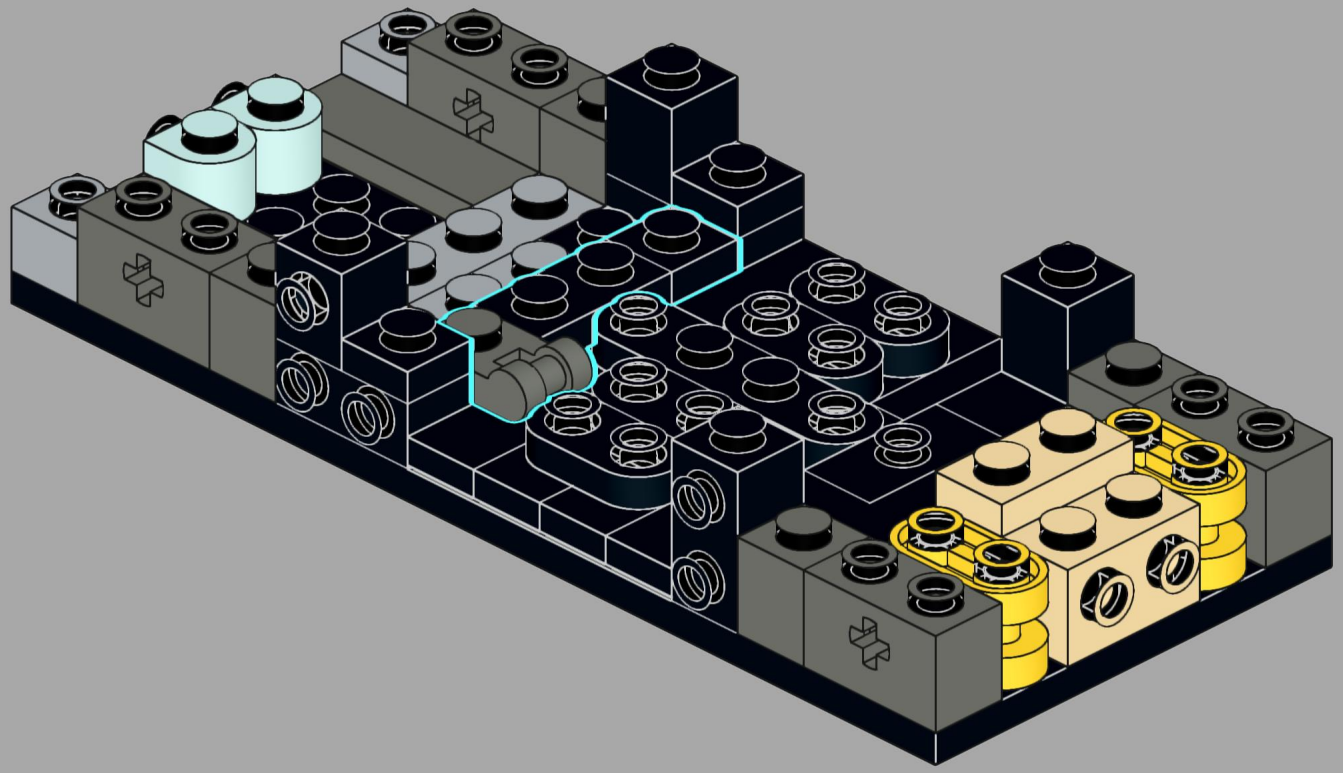

16

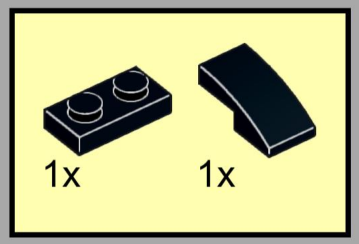

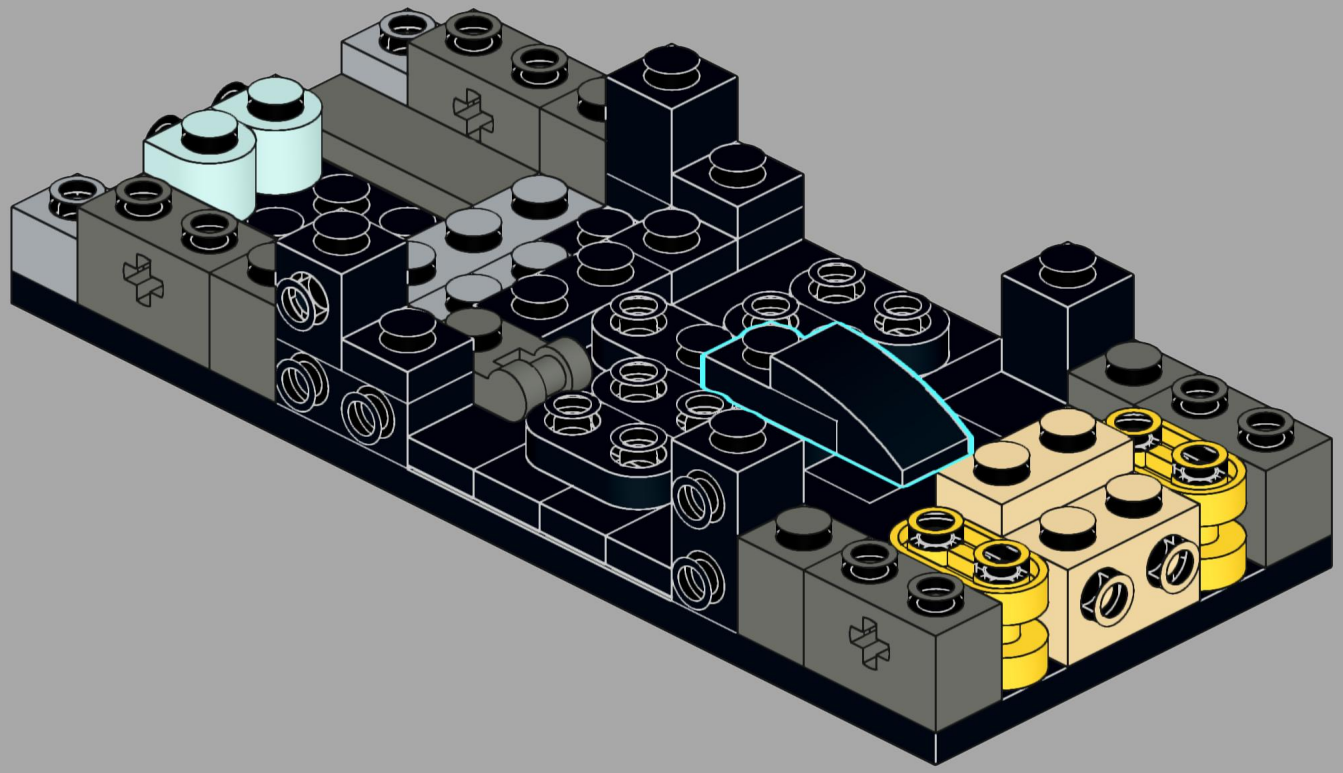

17

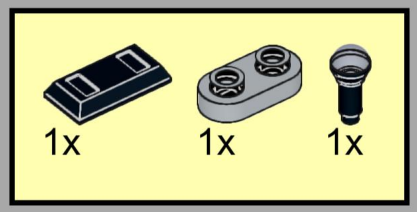

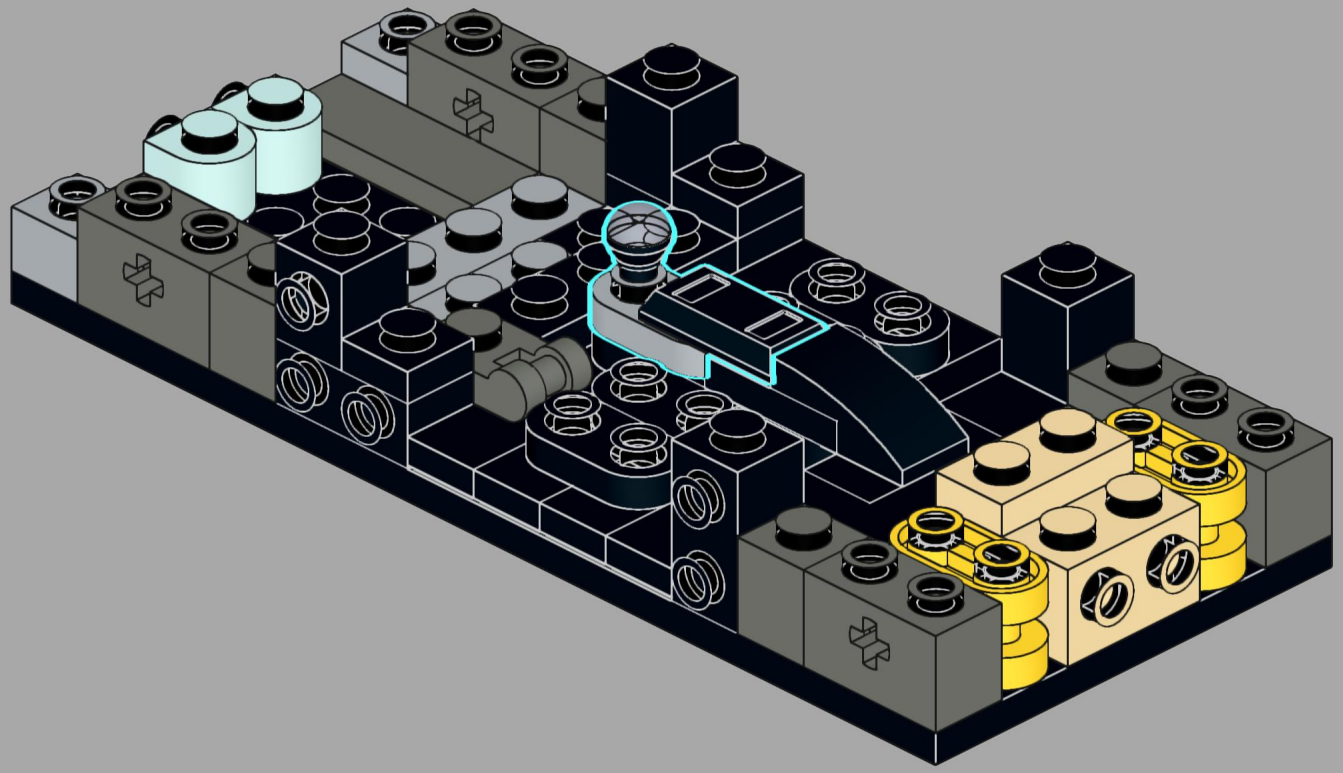

18

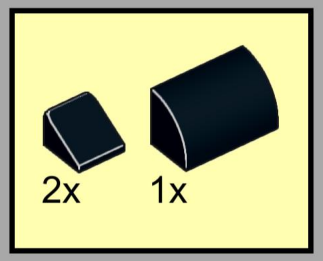

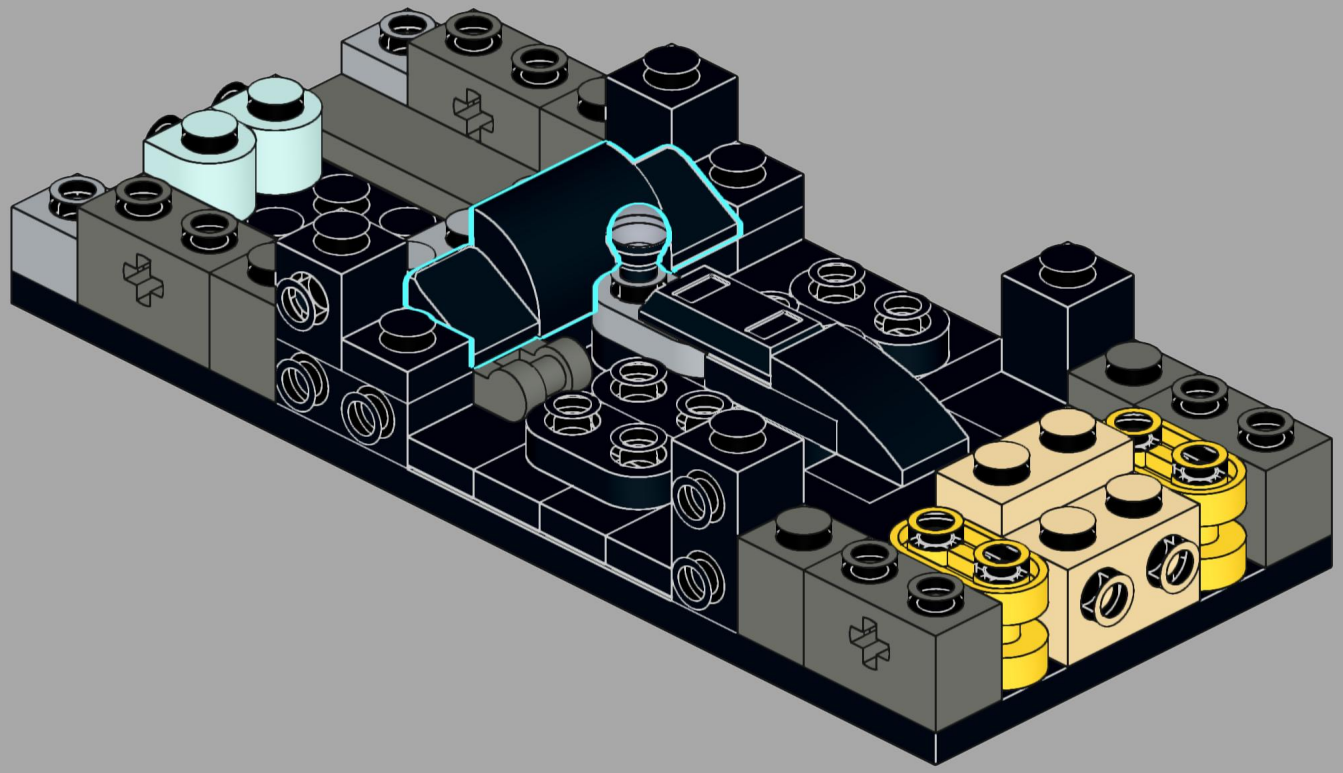

19

2x

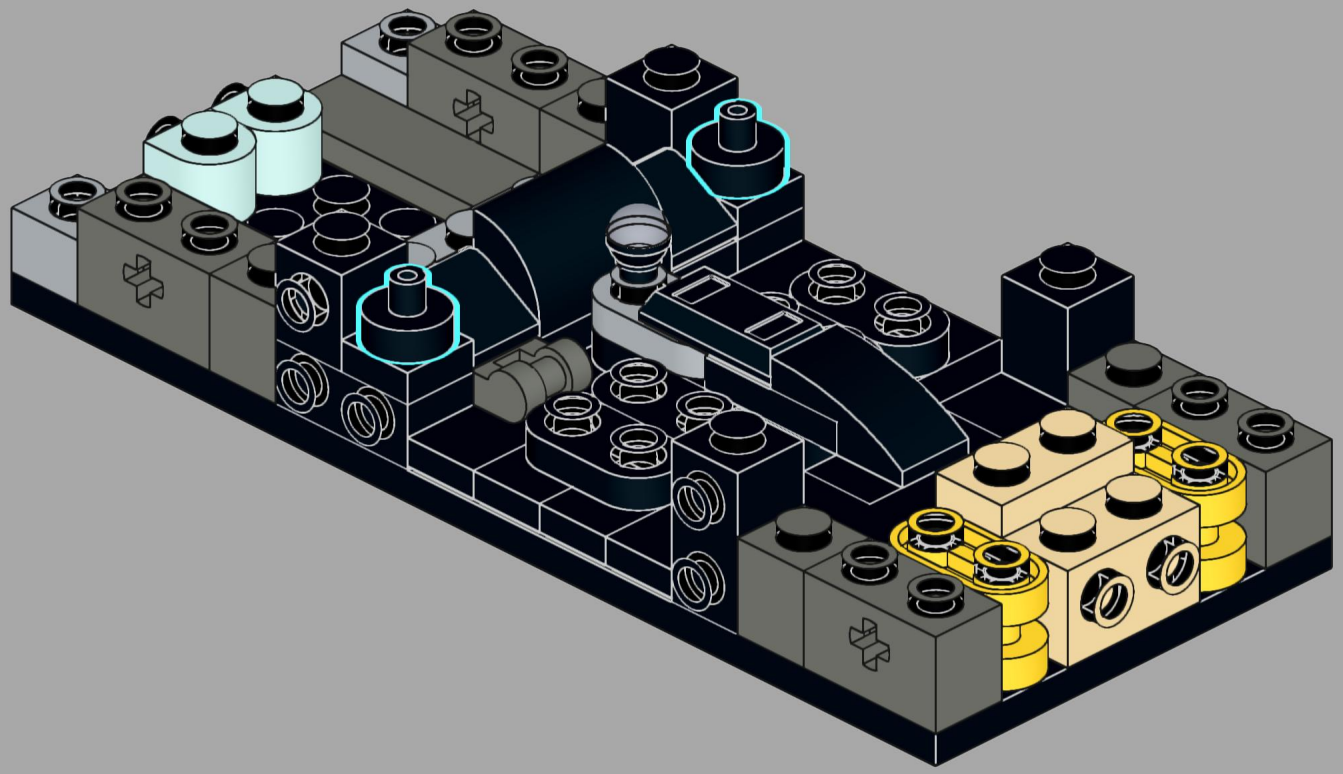

20

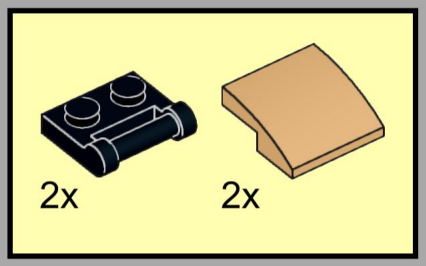

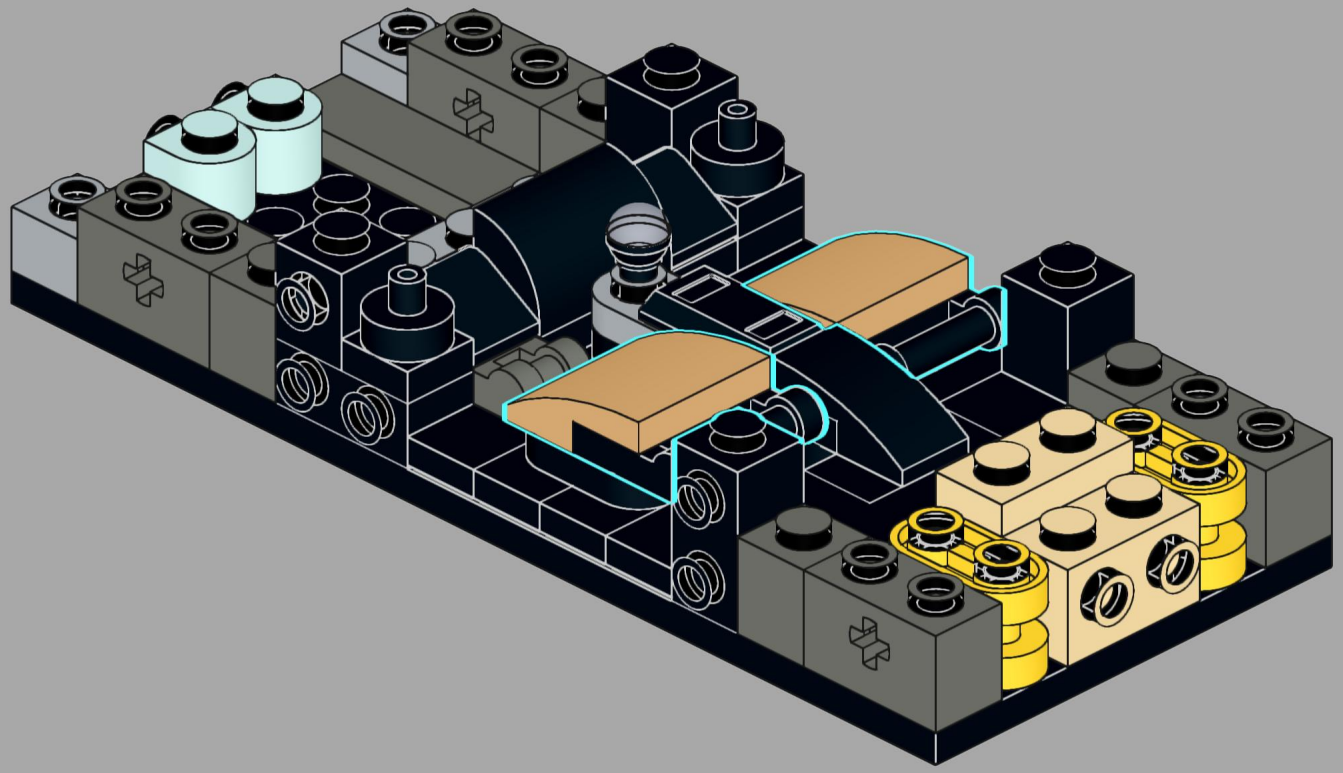

21

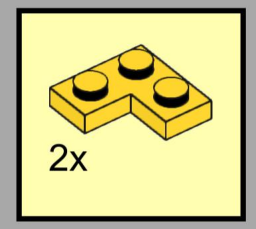

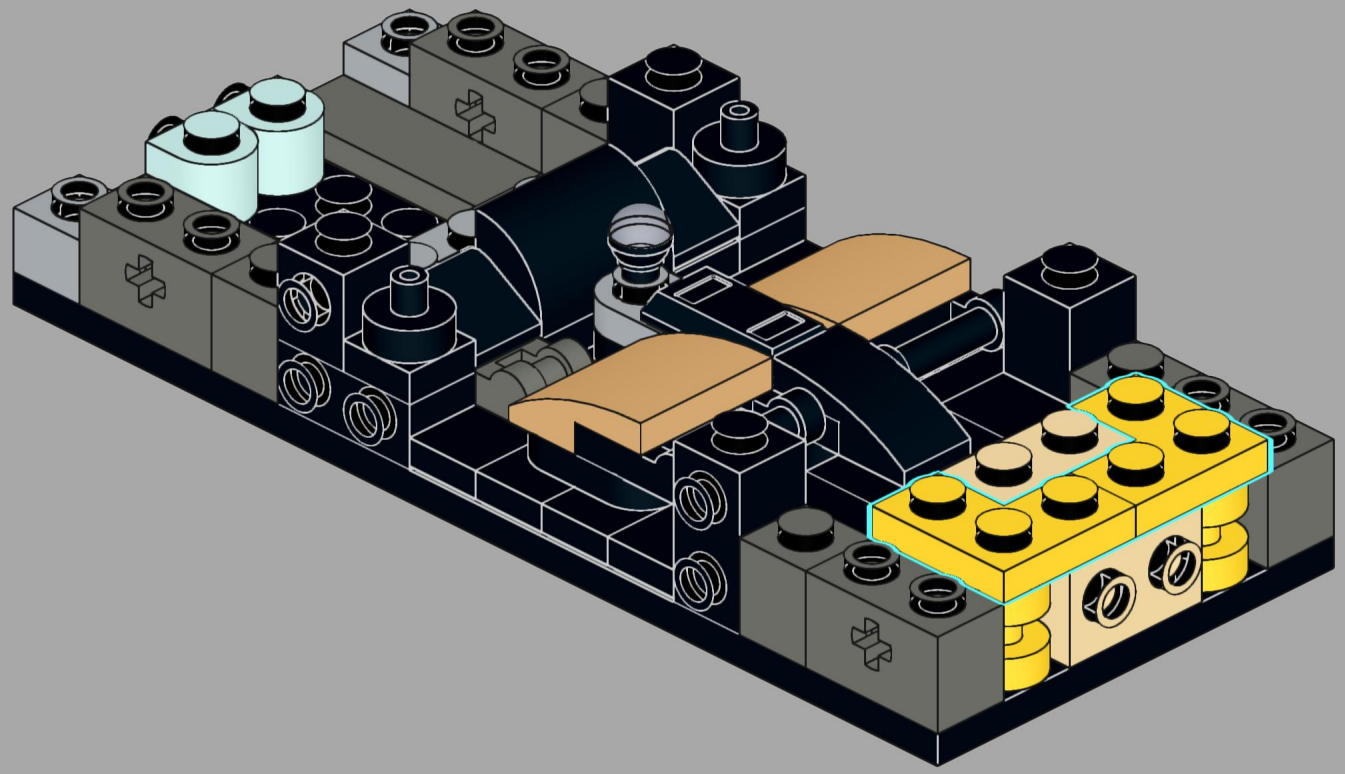

22

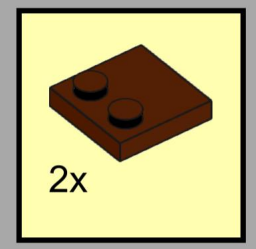

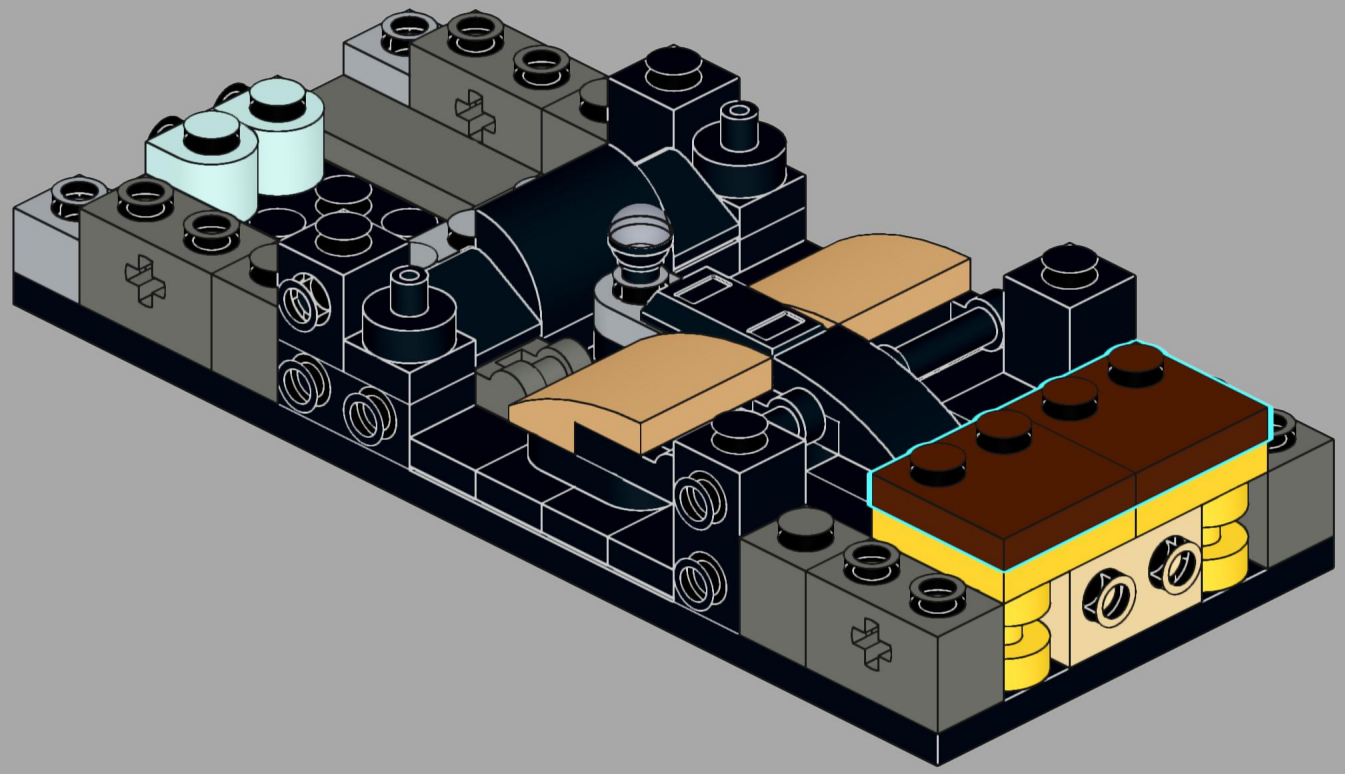

23

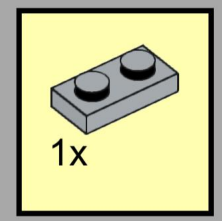

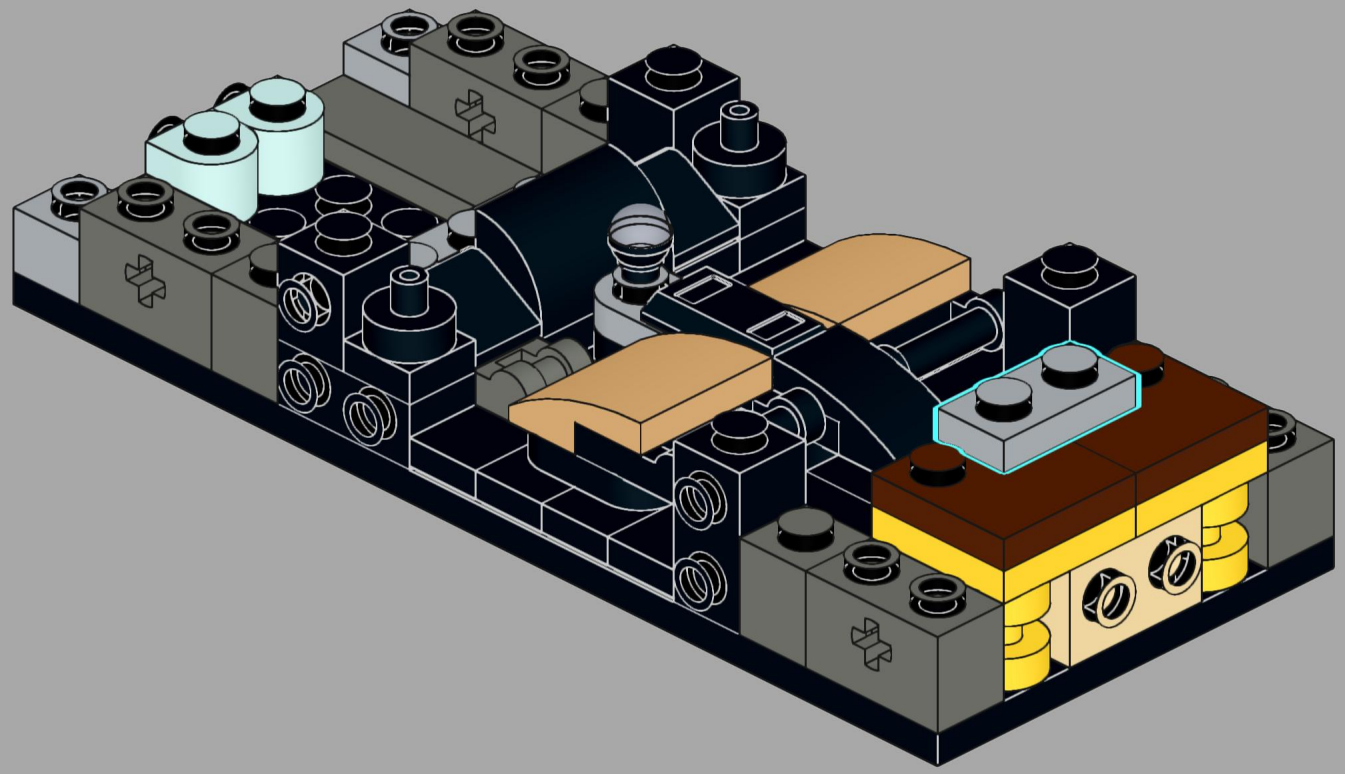

24

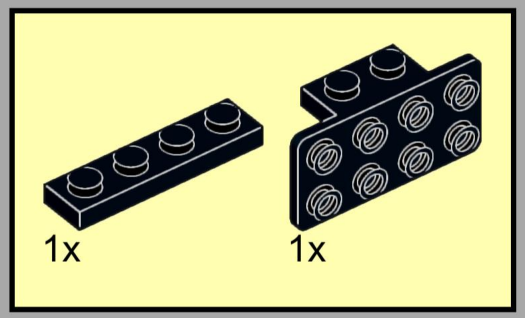

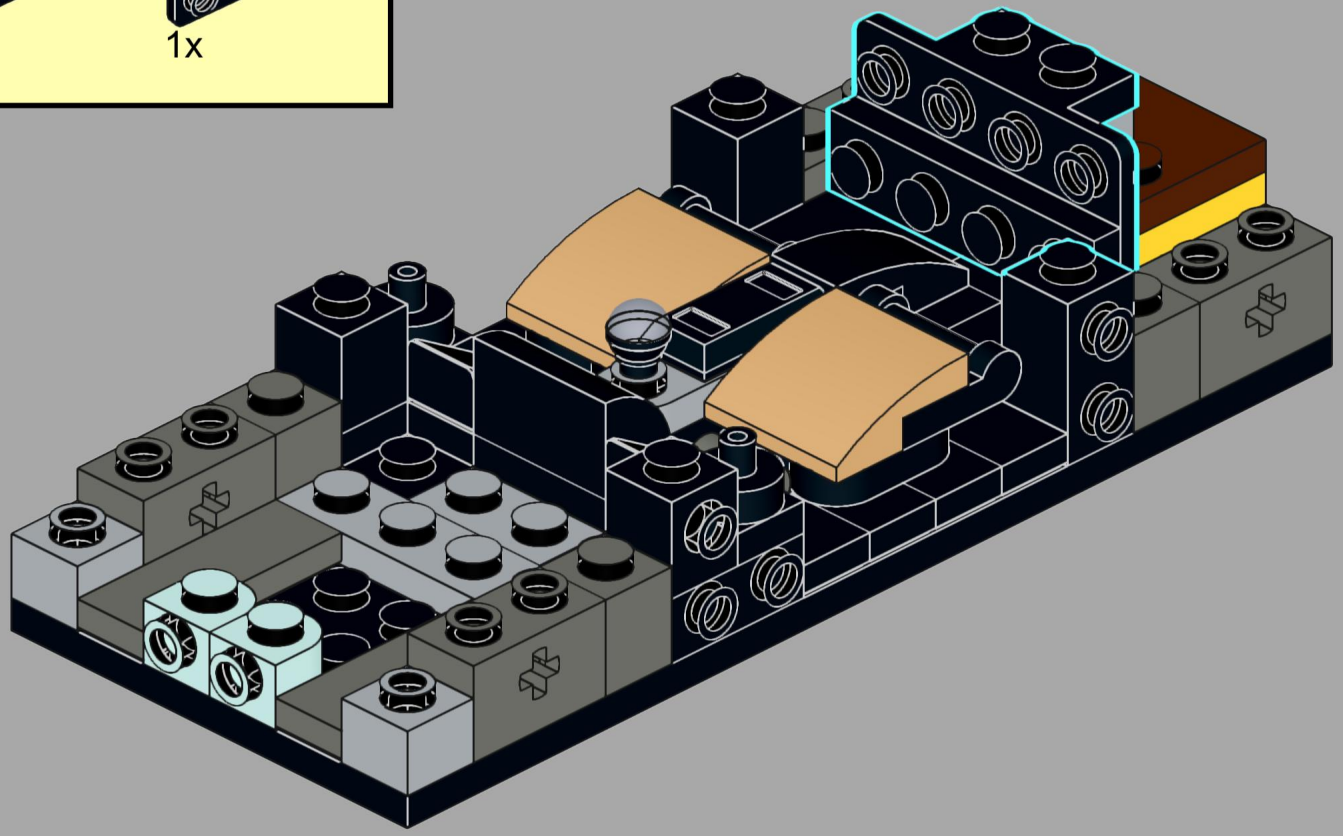

25



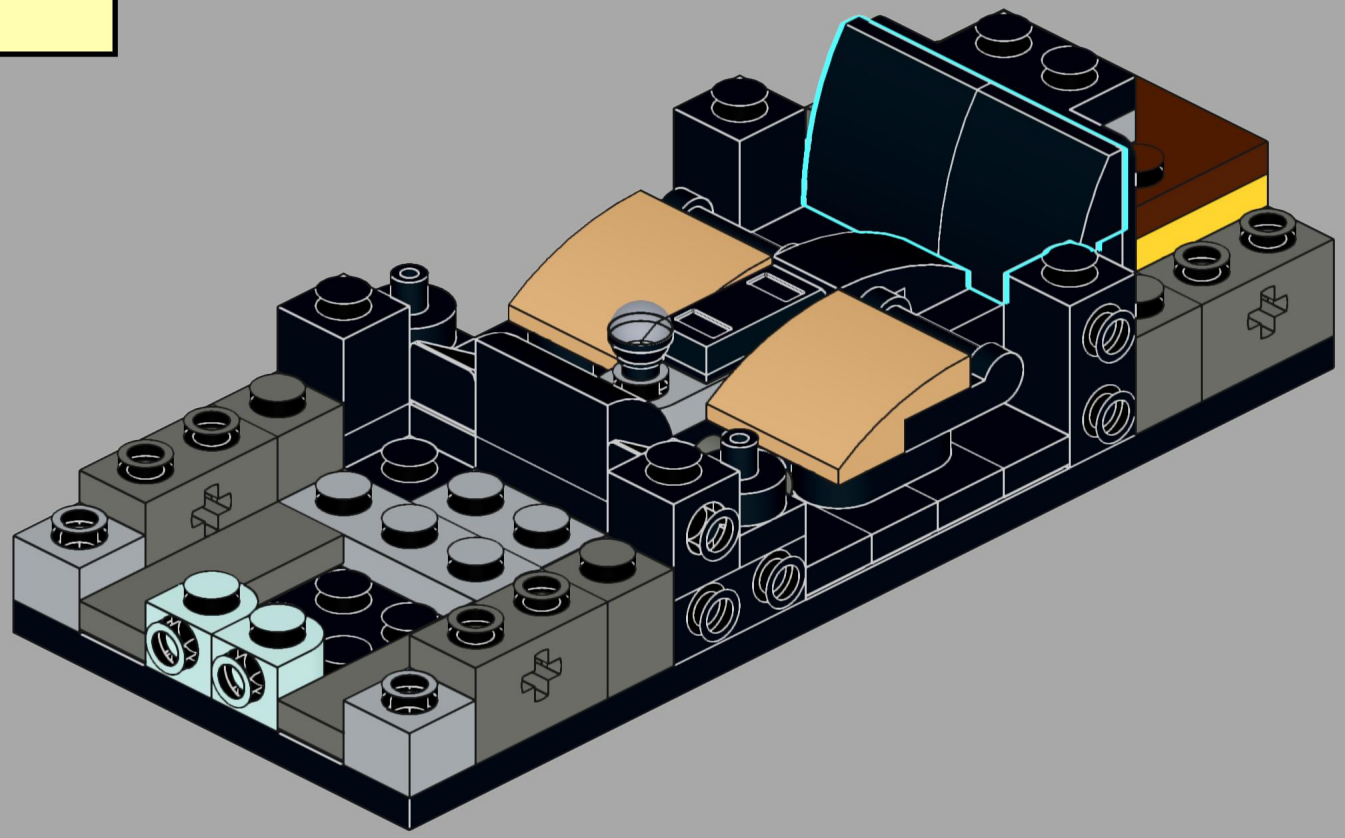

26

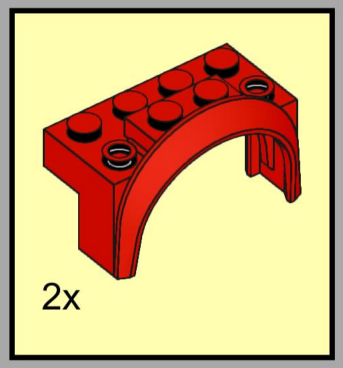

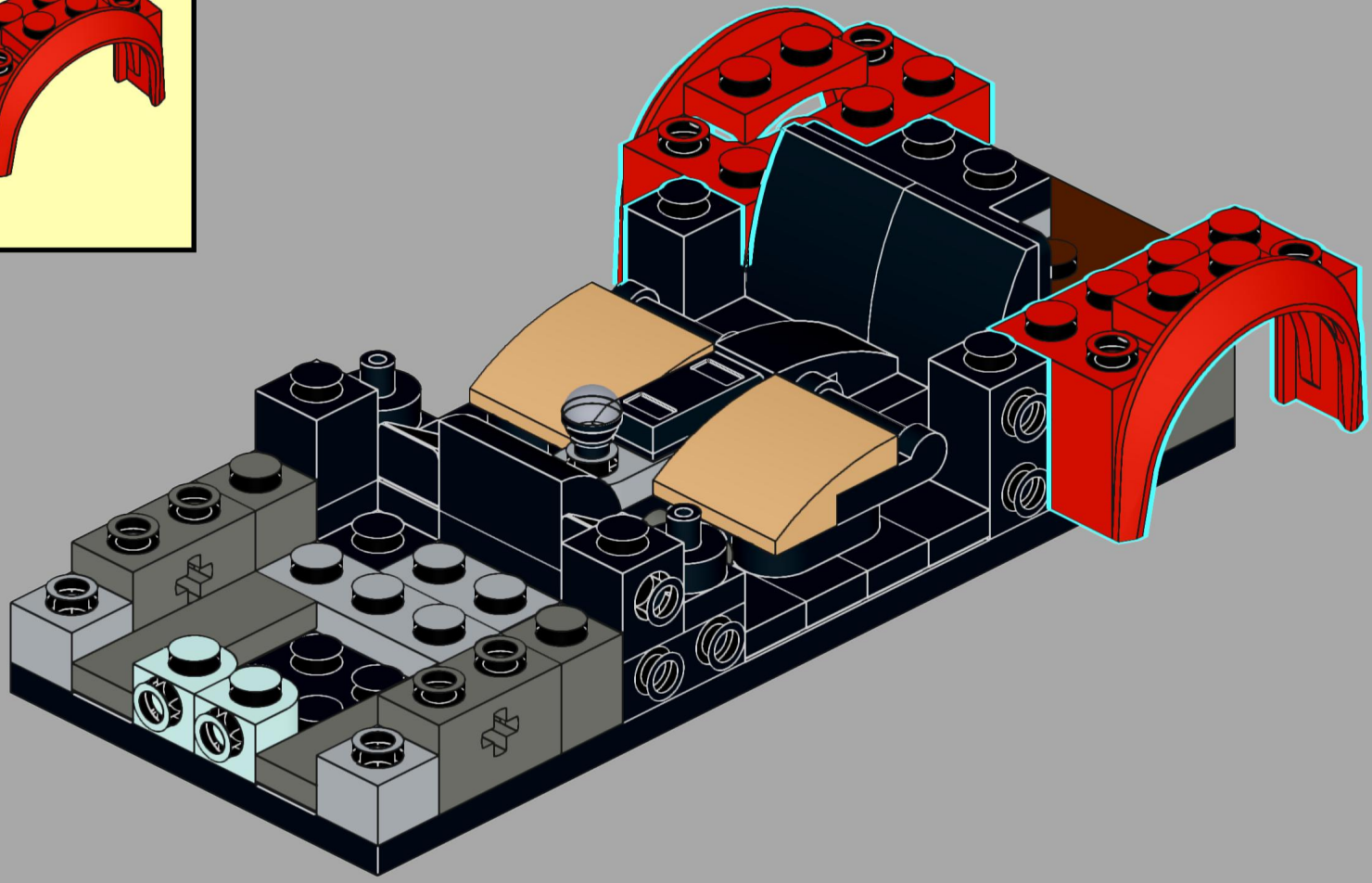

27

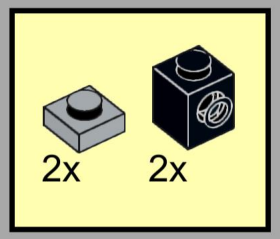

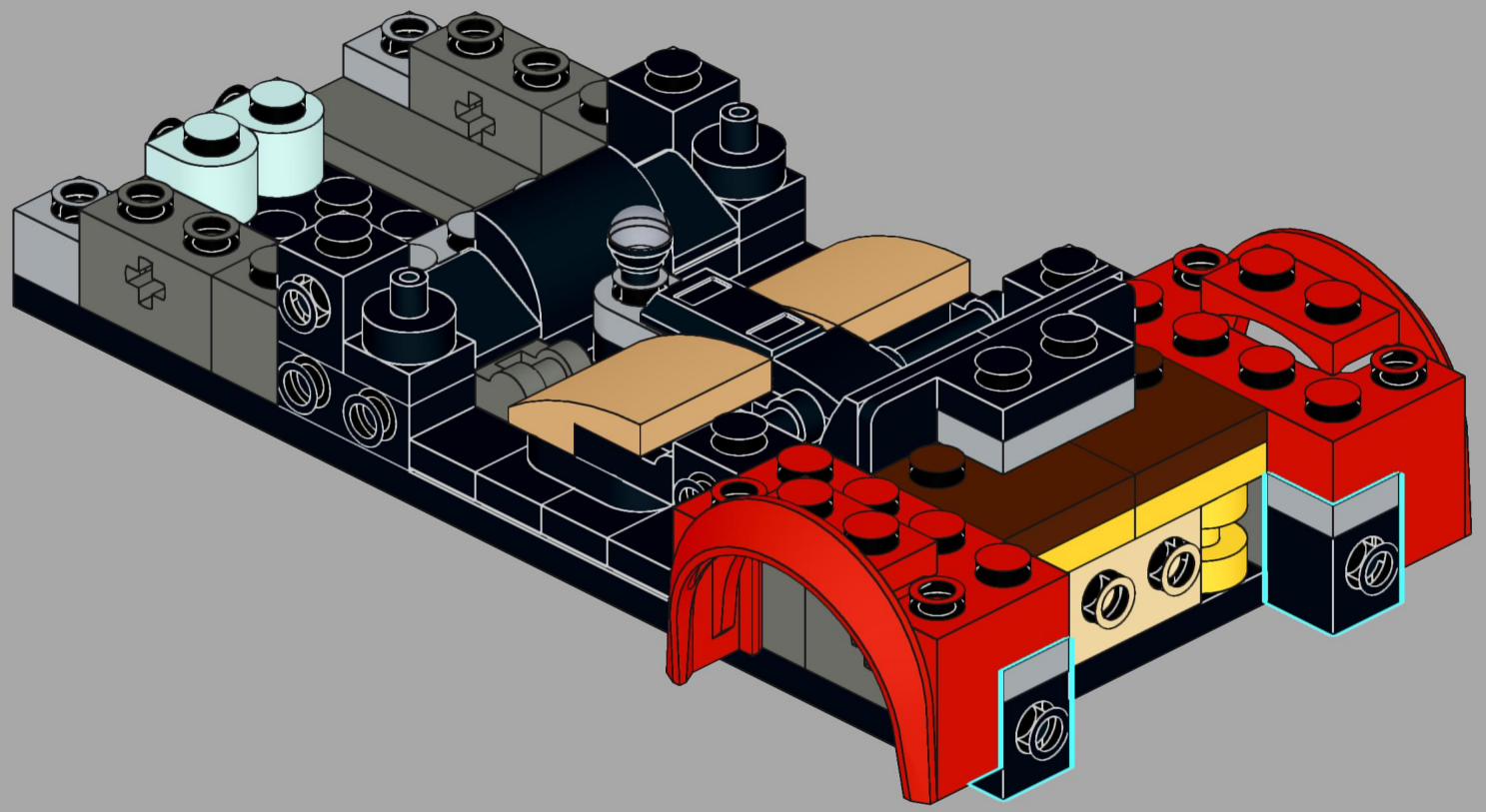

28

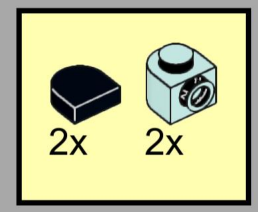

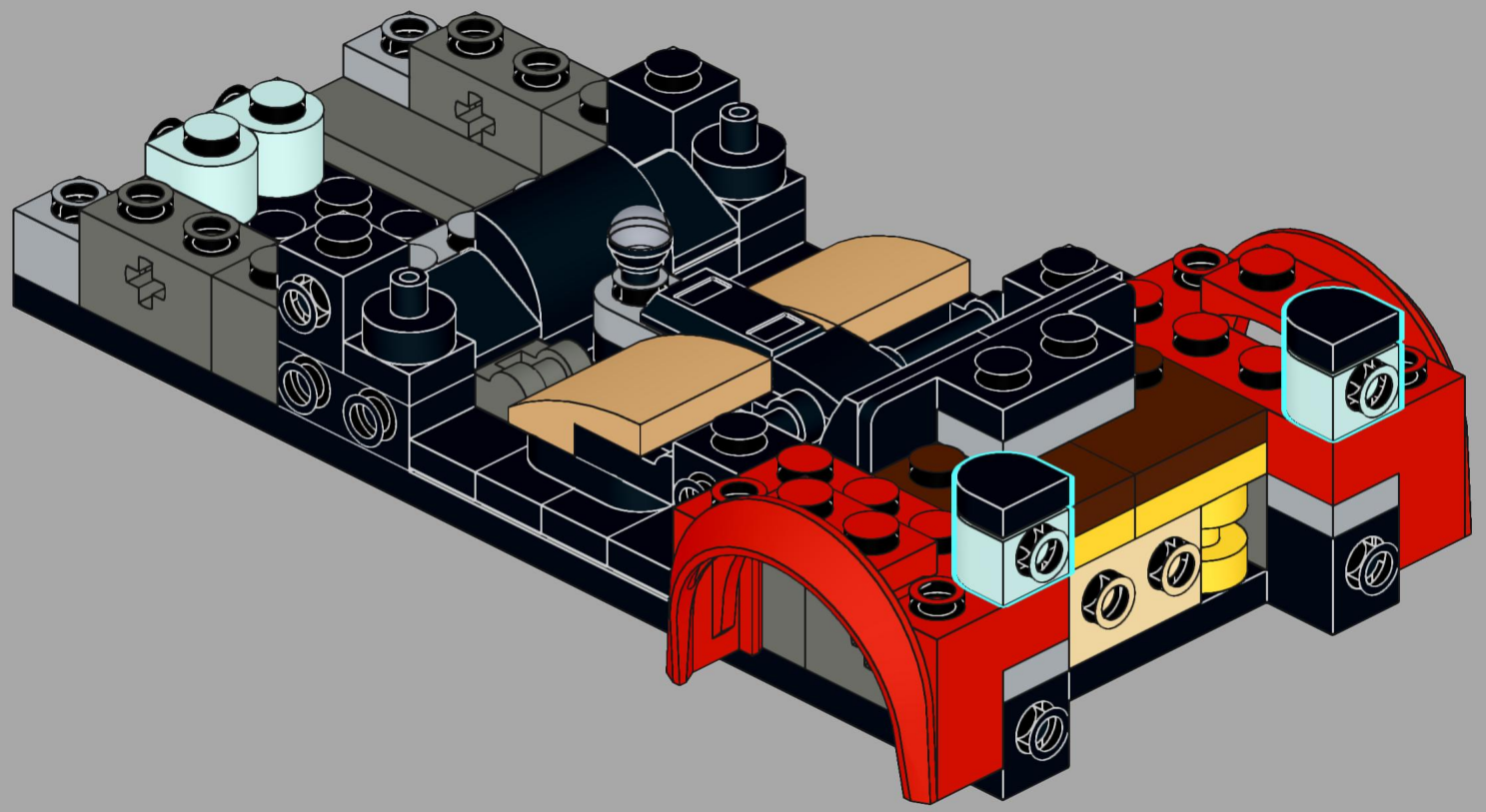

29

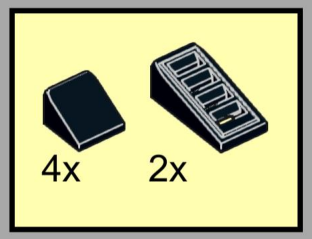

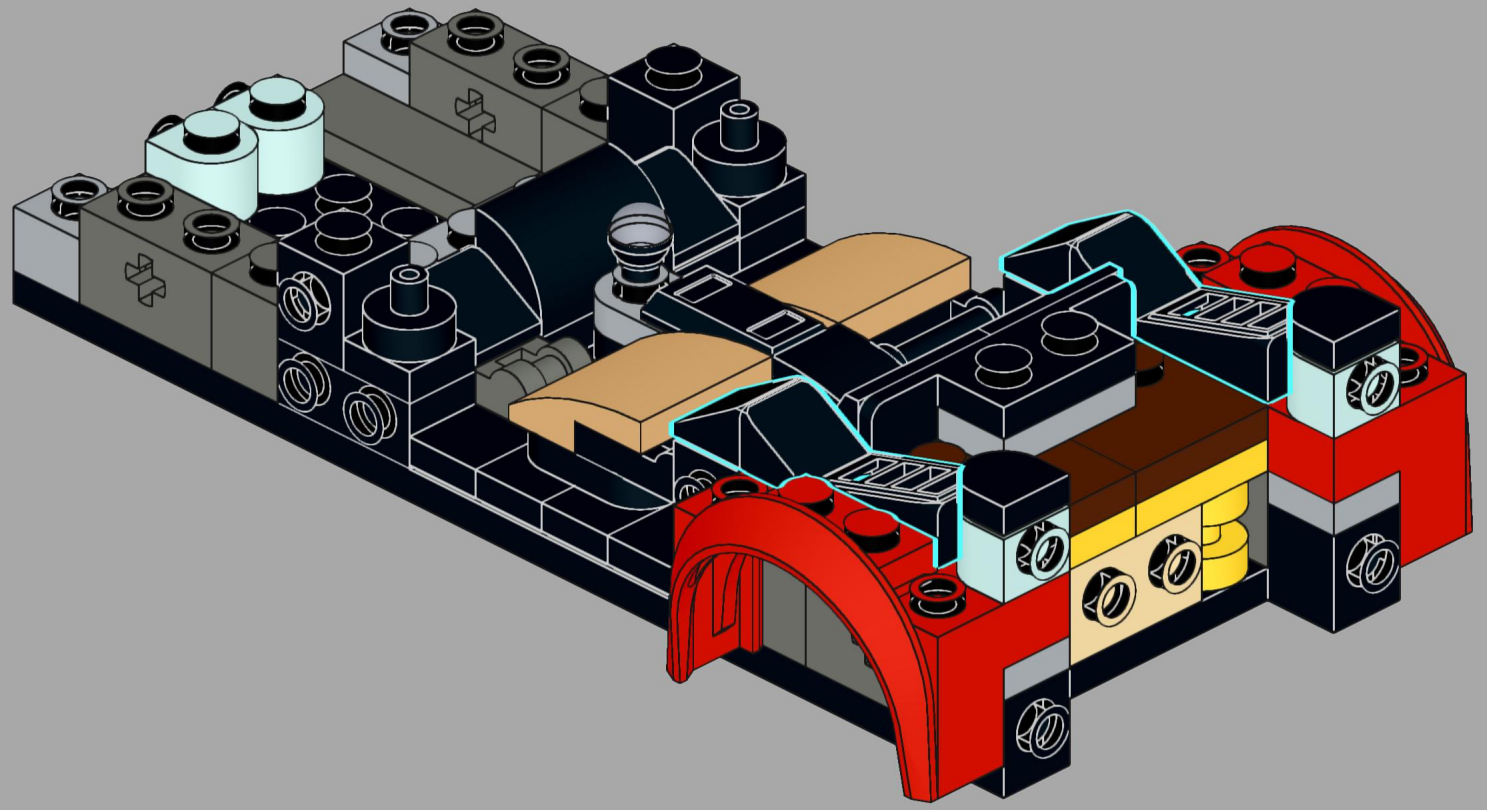

30

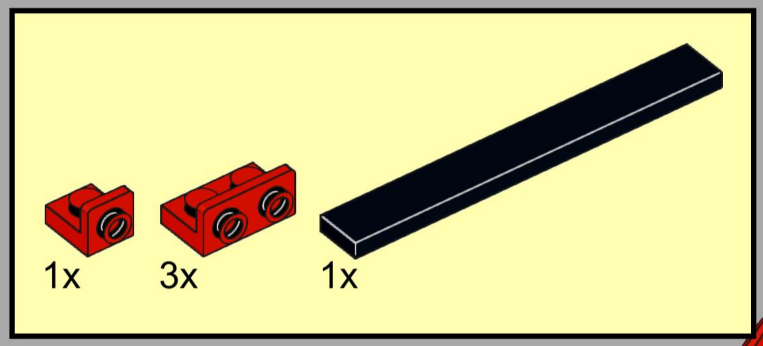

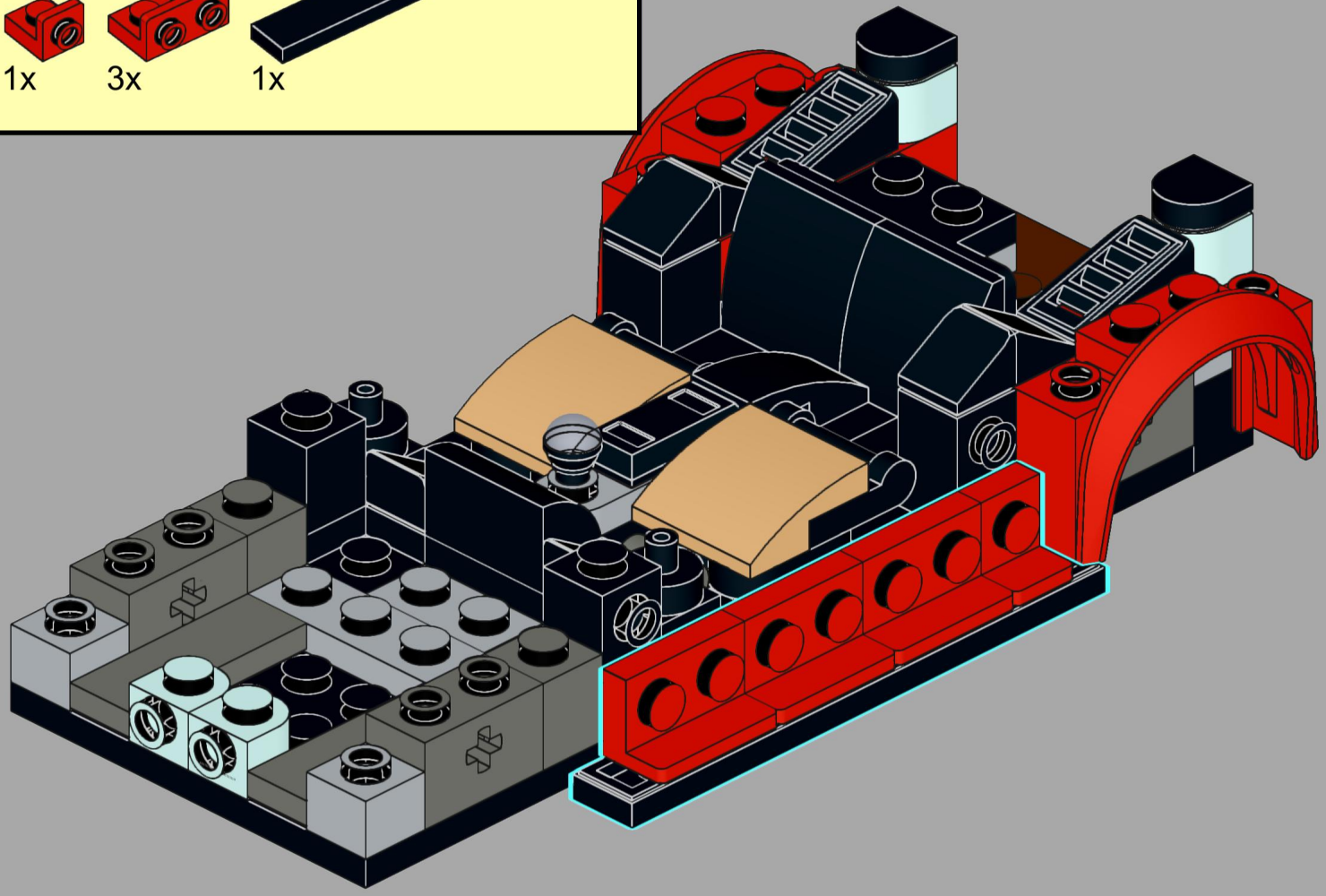

31

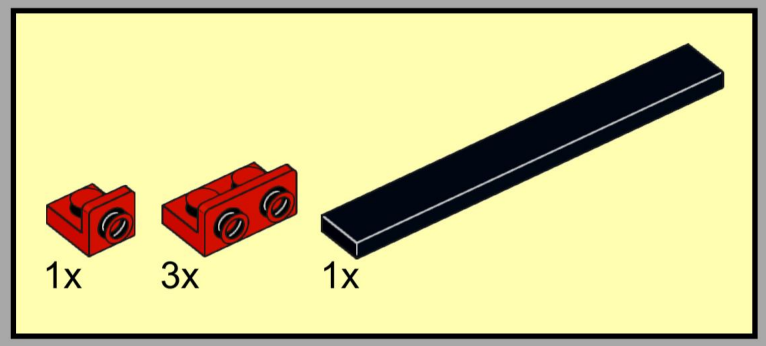

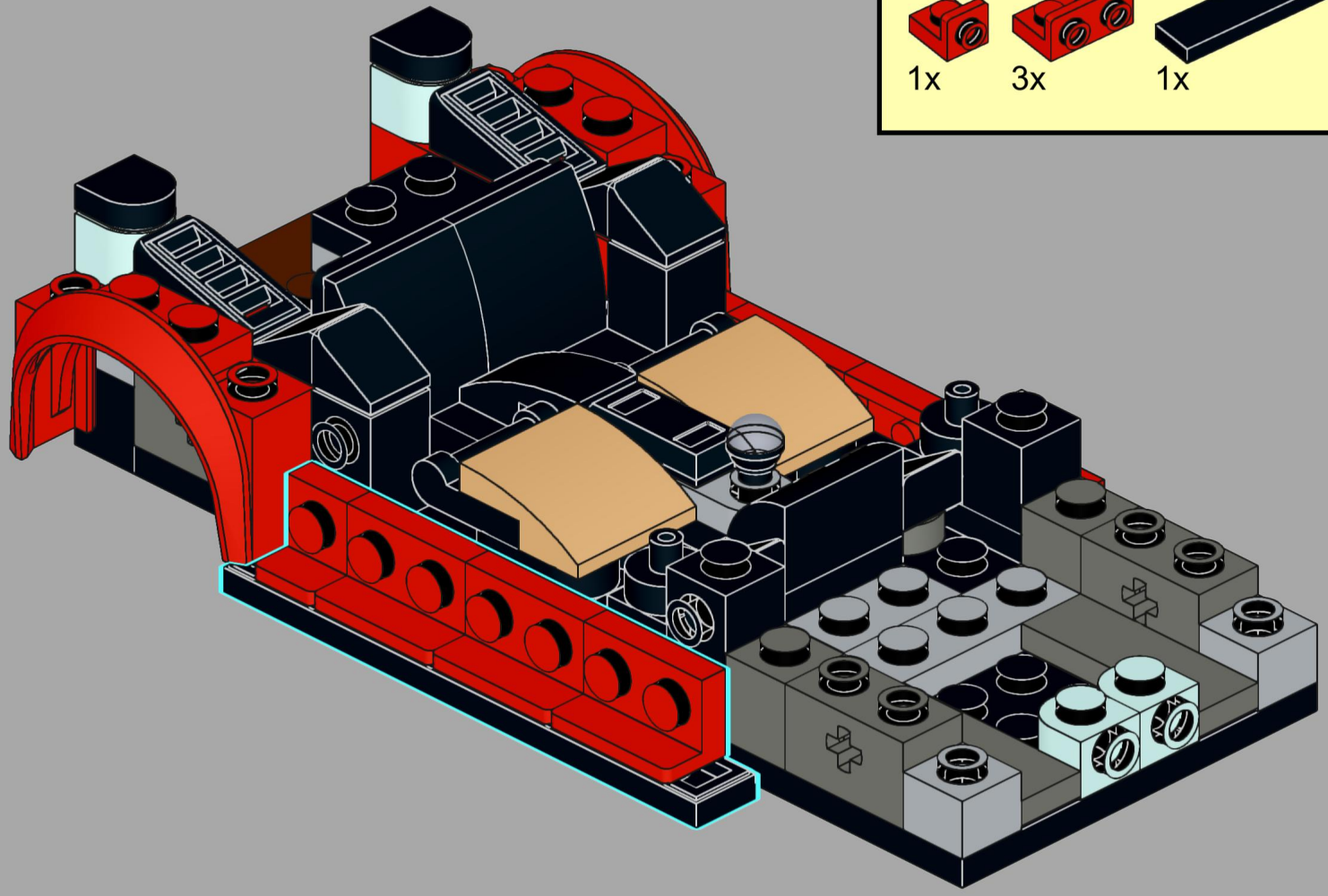

32

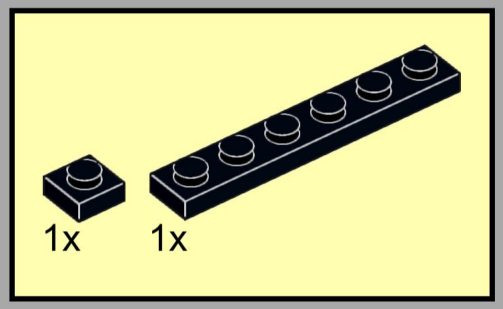

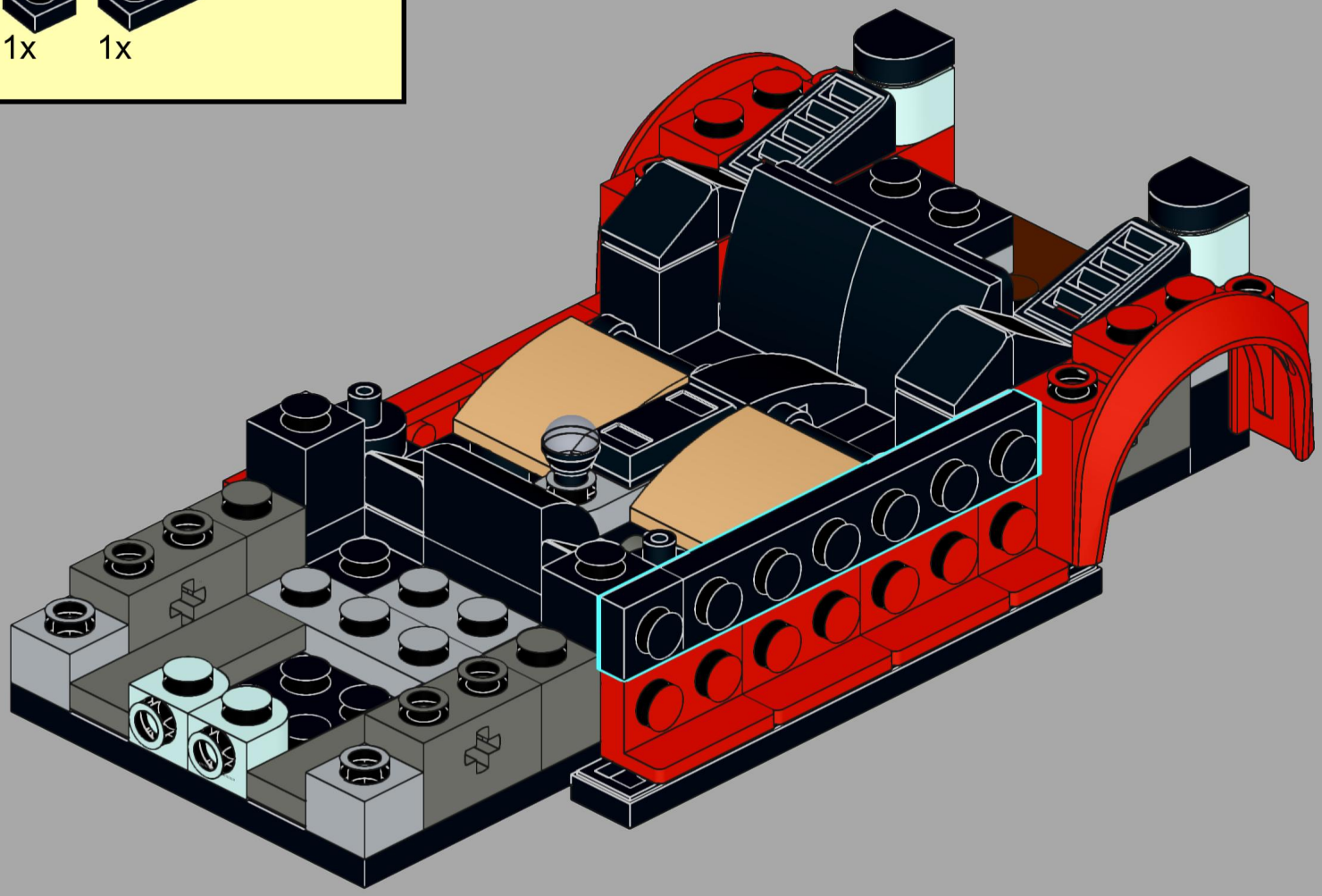

33

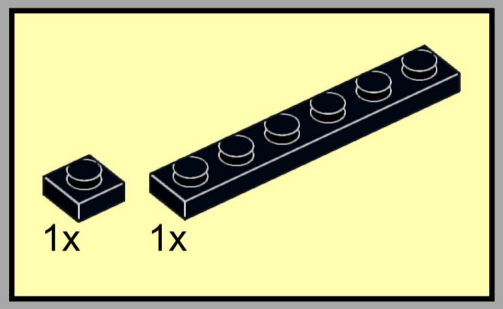

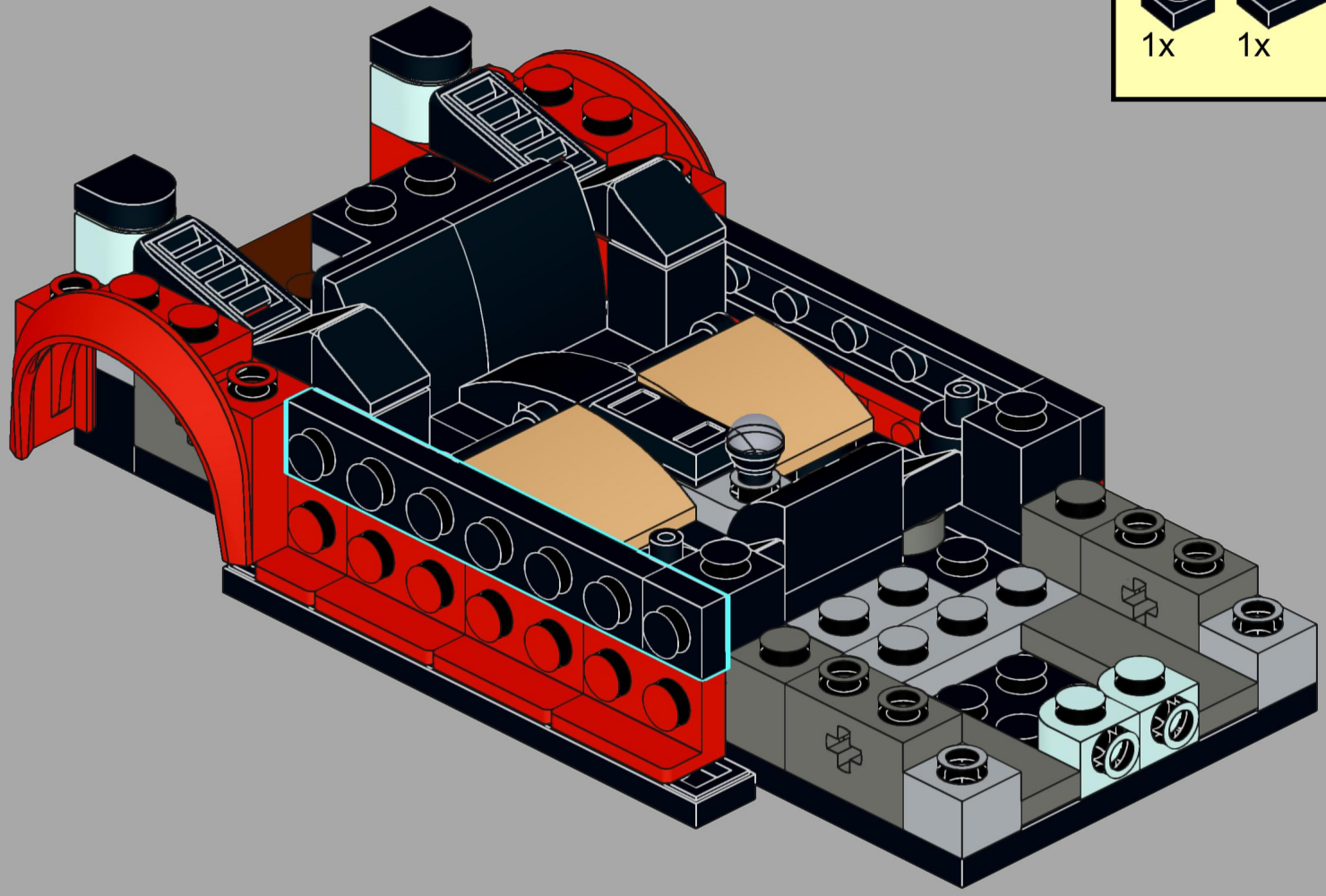

34

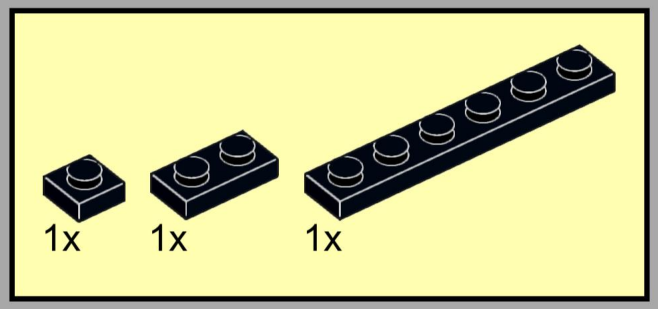

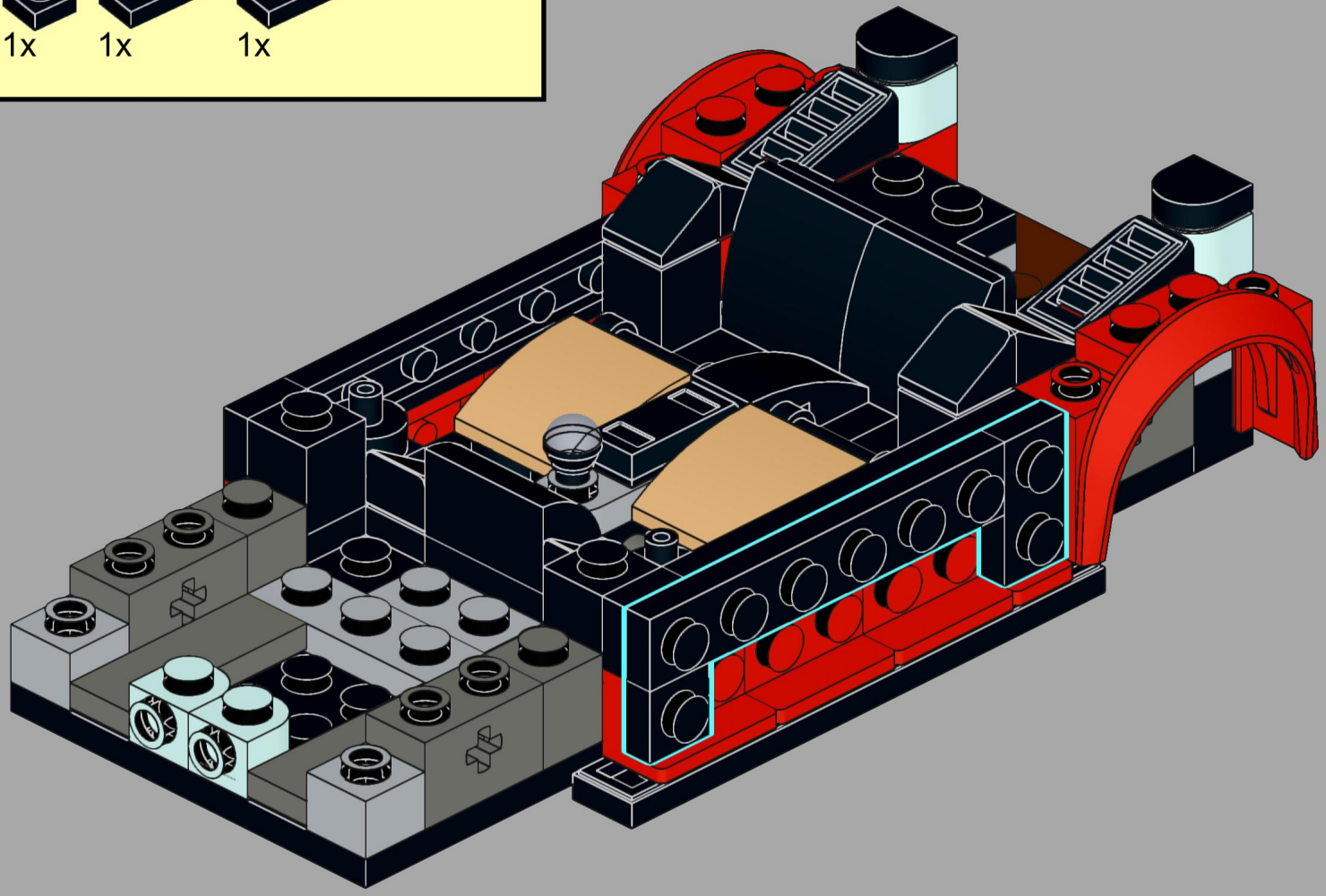

35

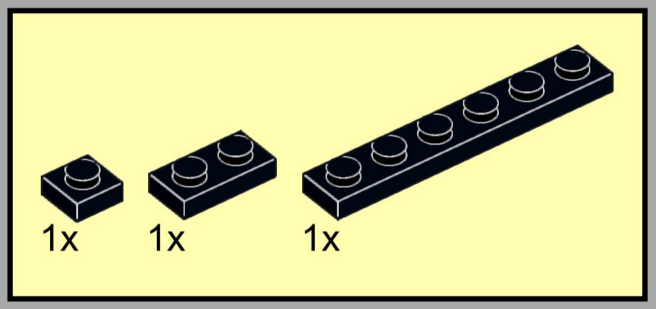

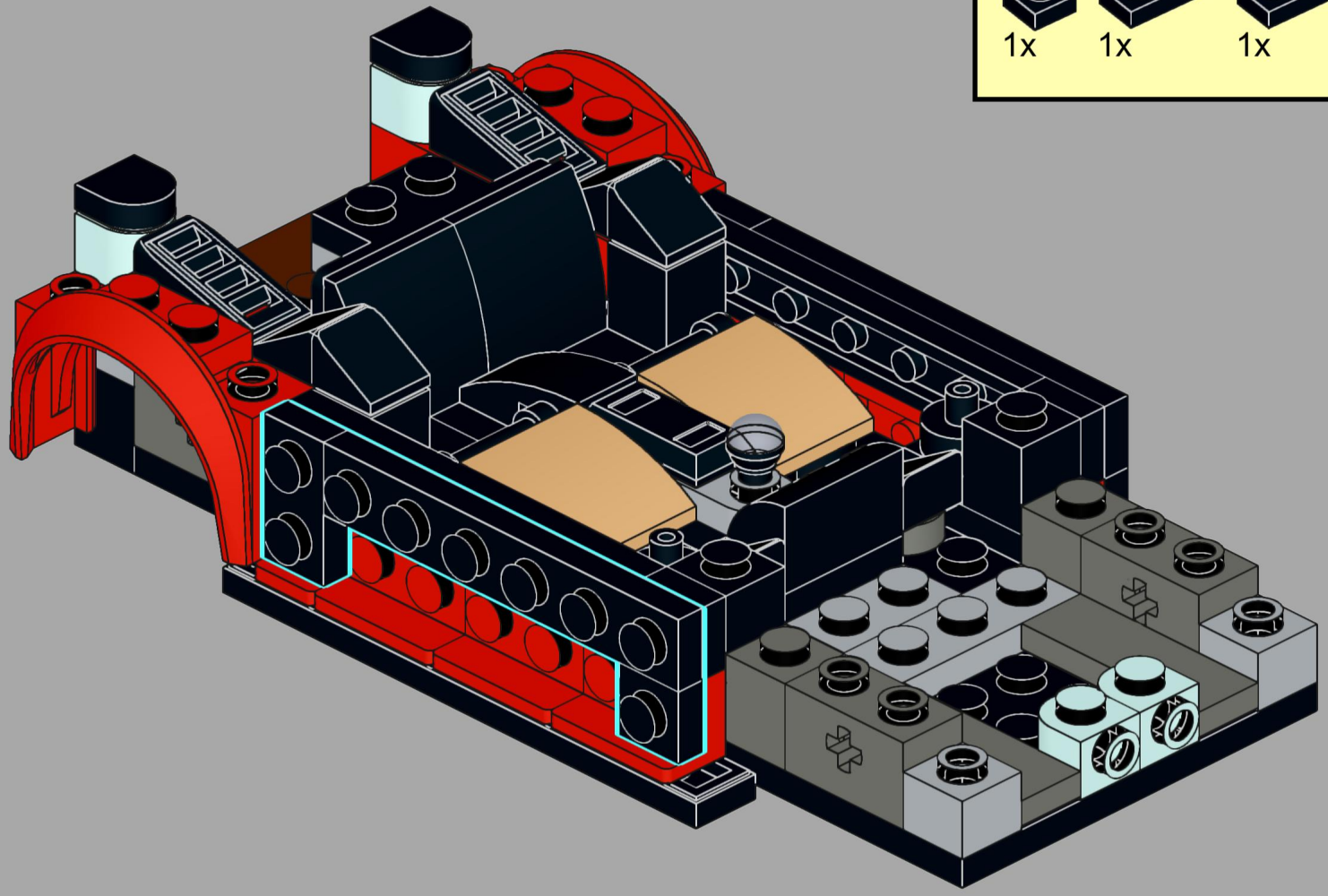

36

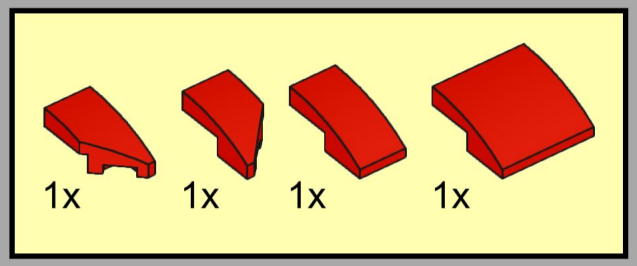

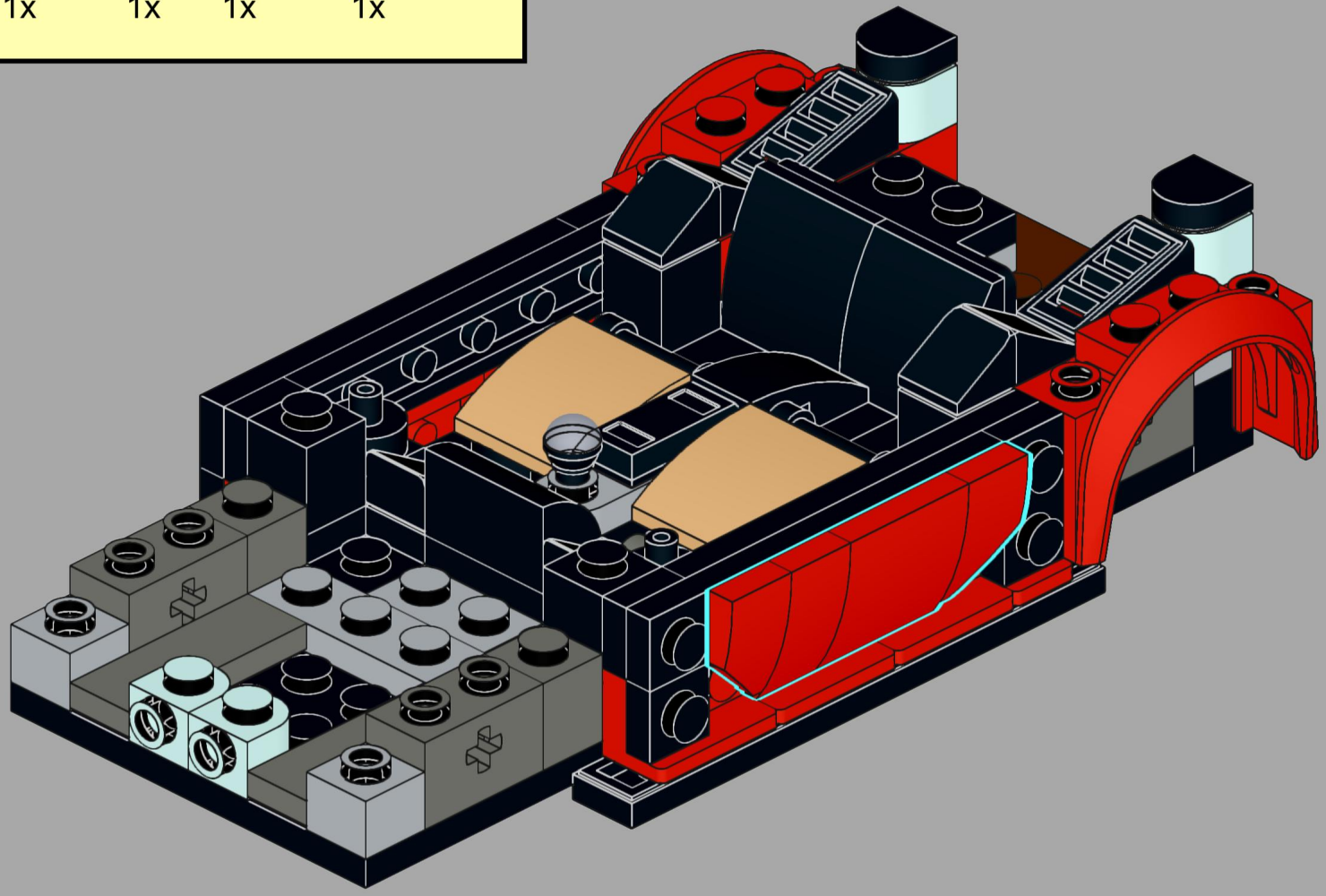

37

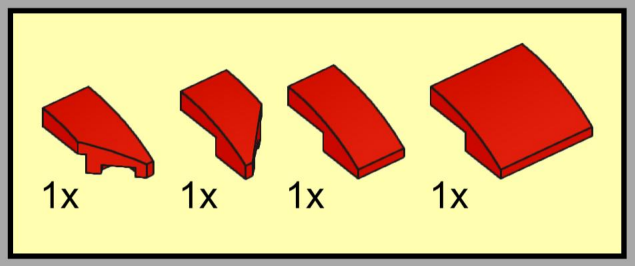

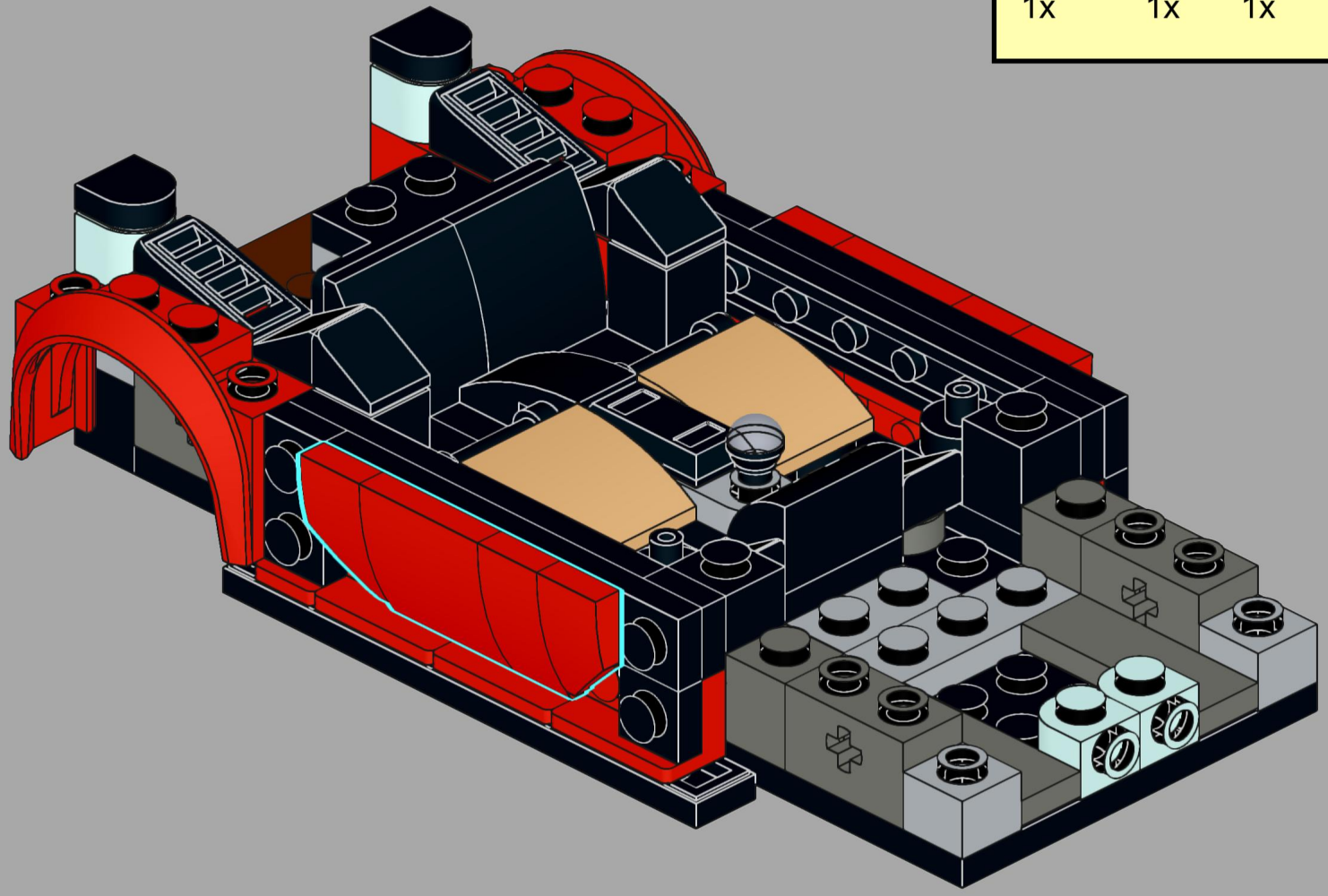

38

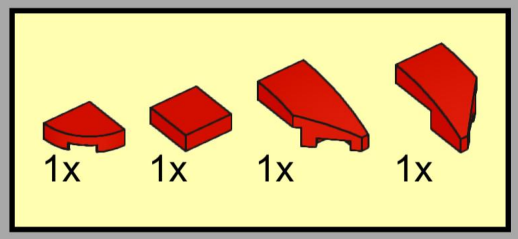

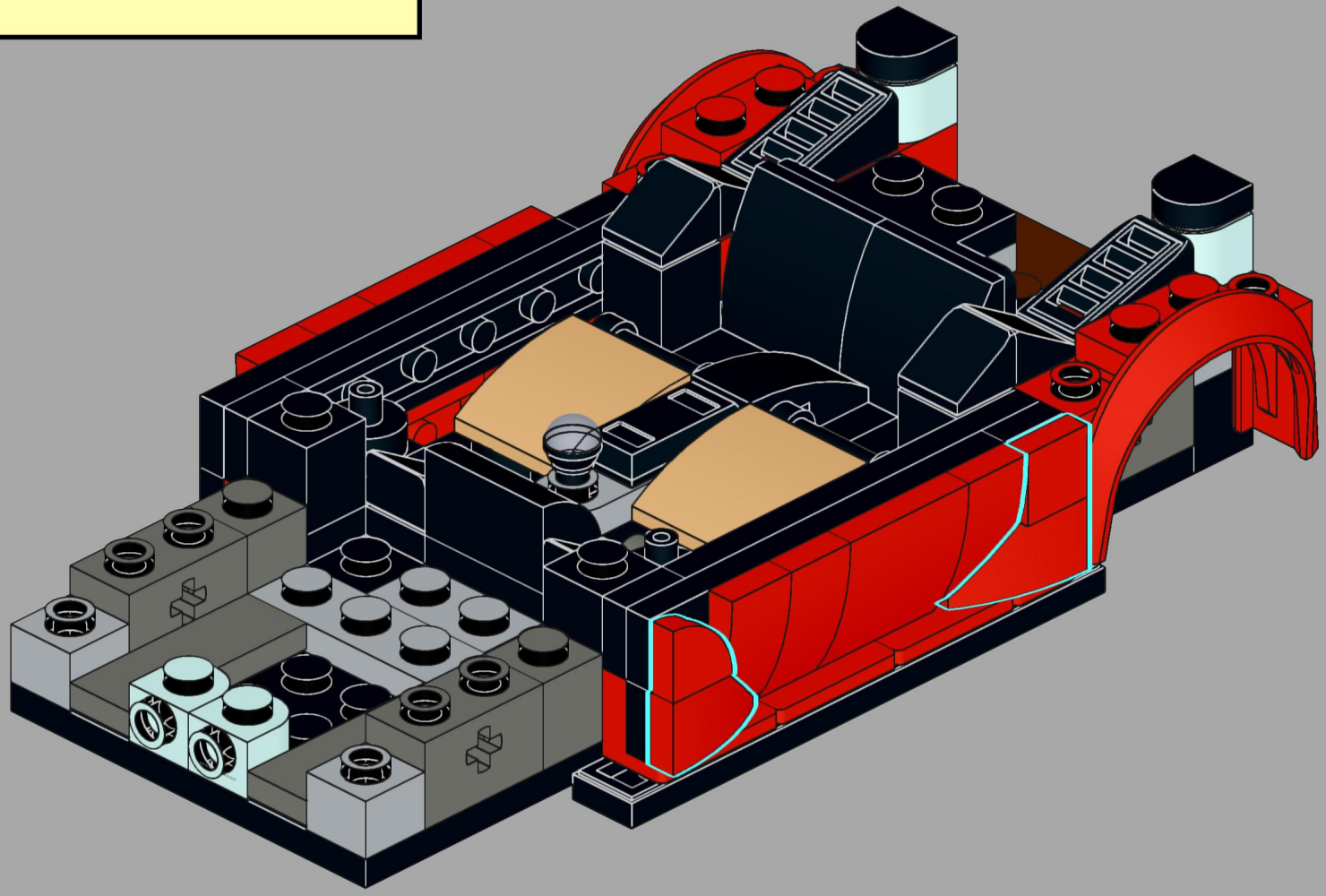

39

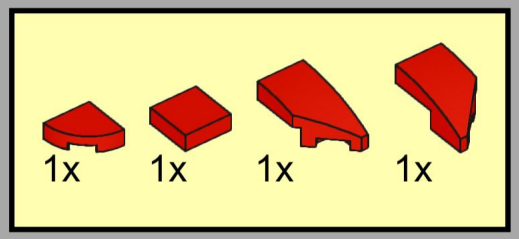

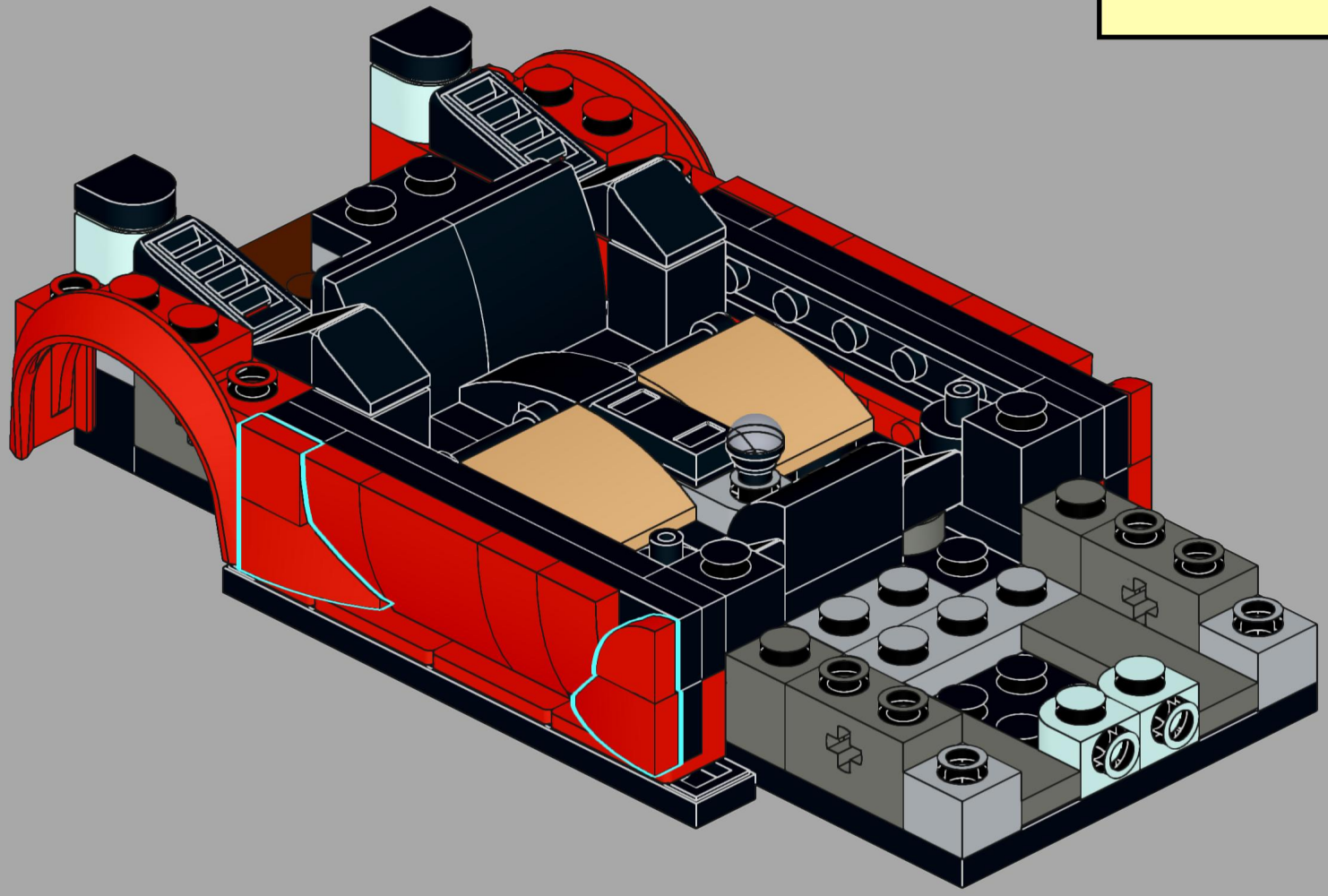

40

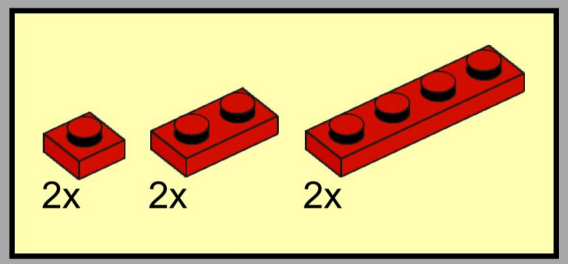

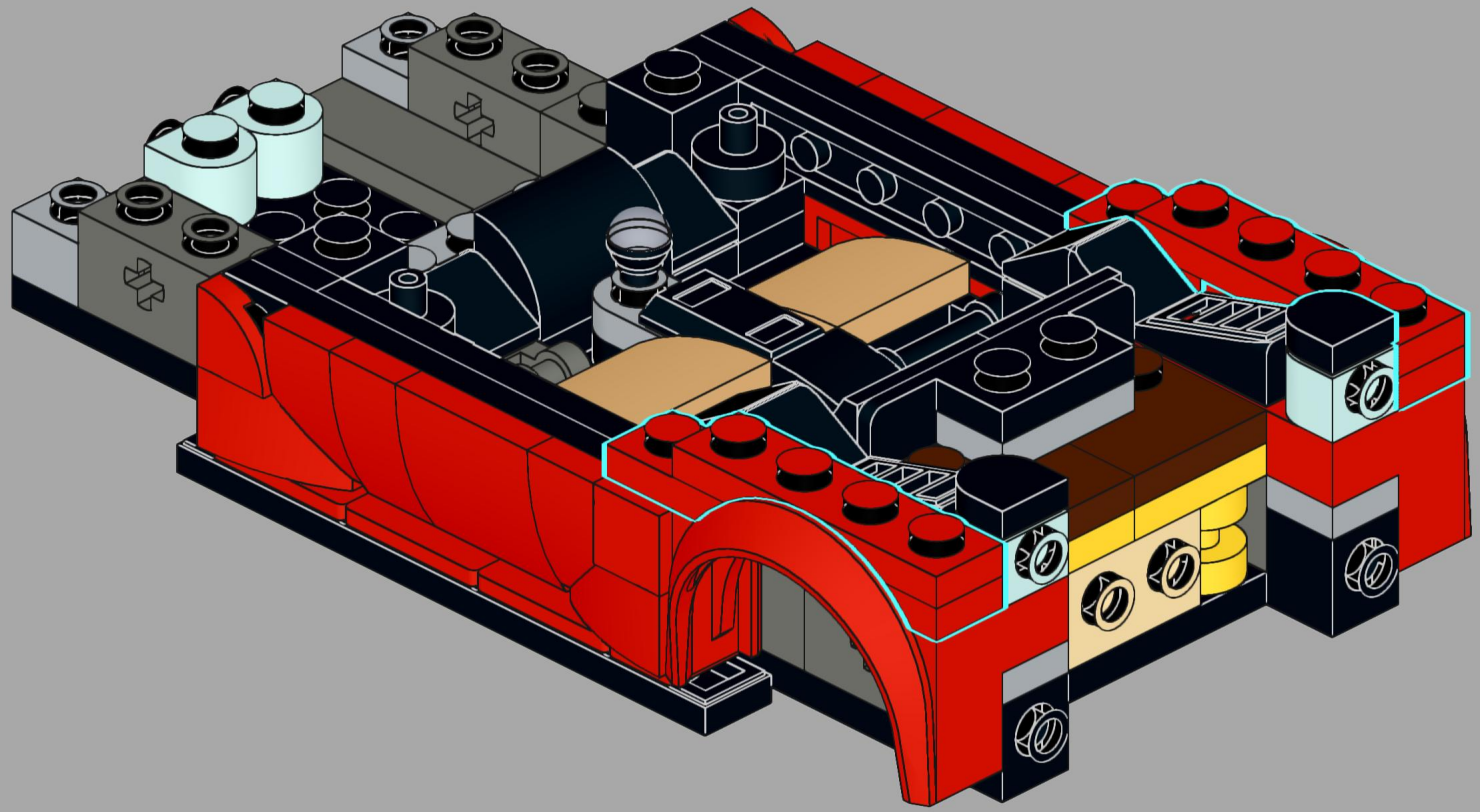

41

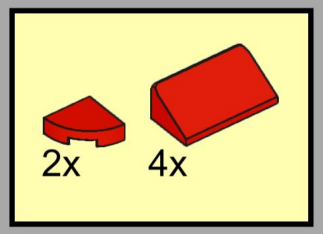

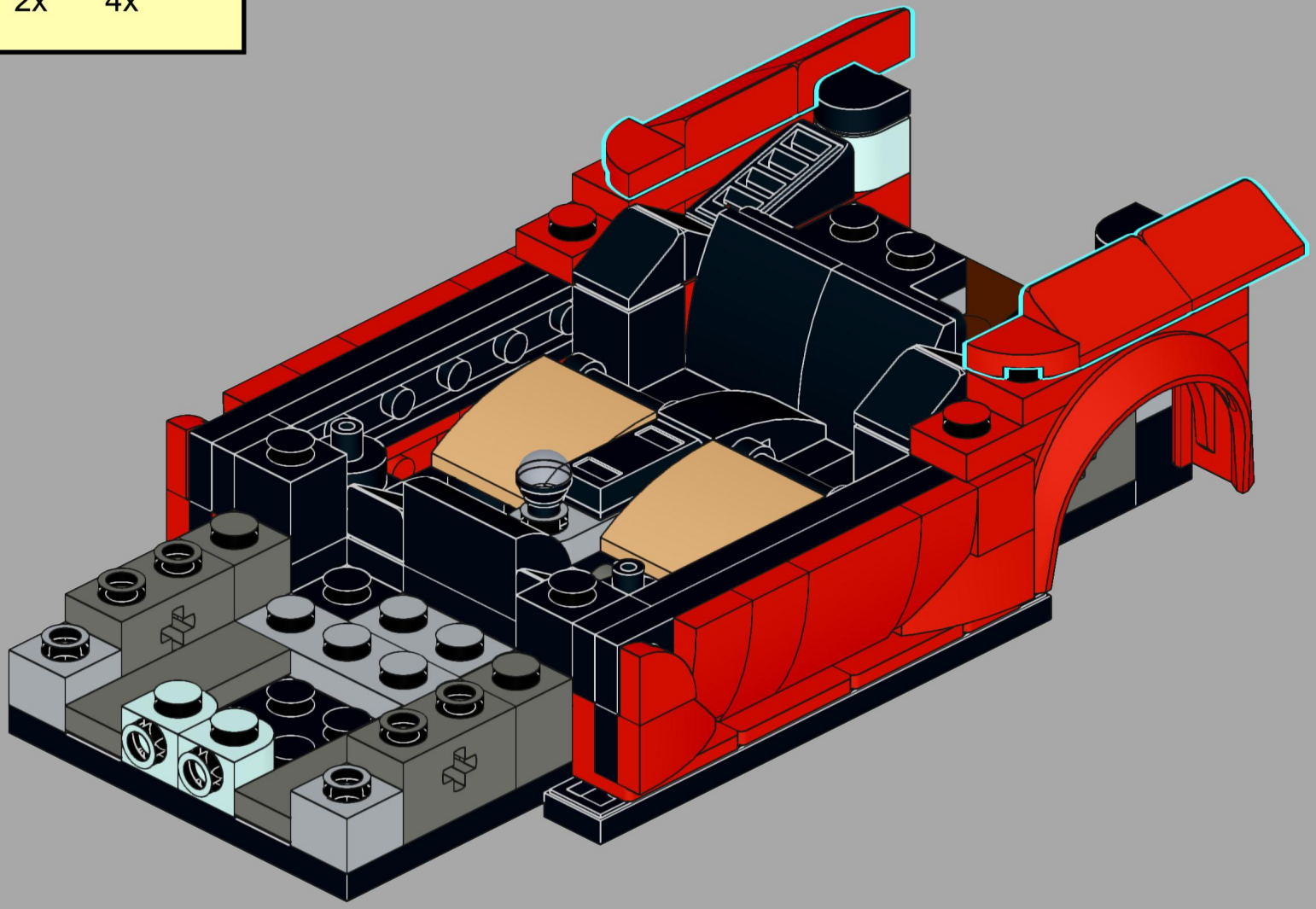

42

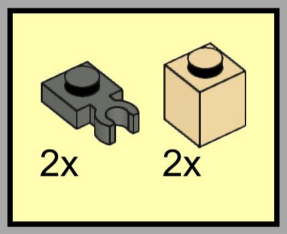

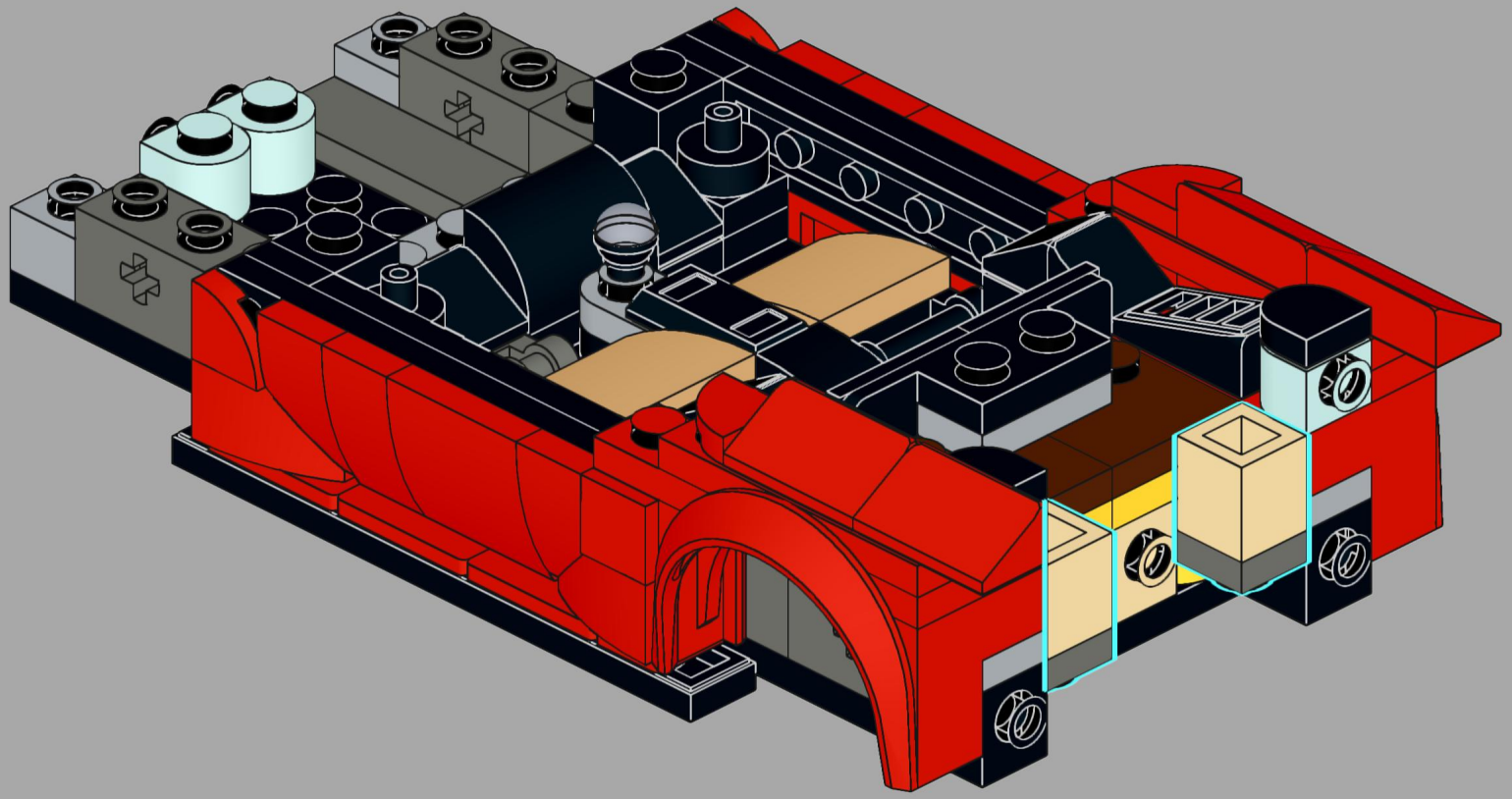

43

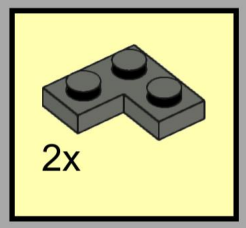

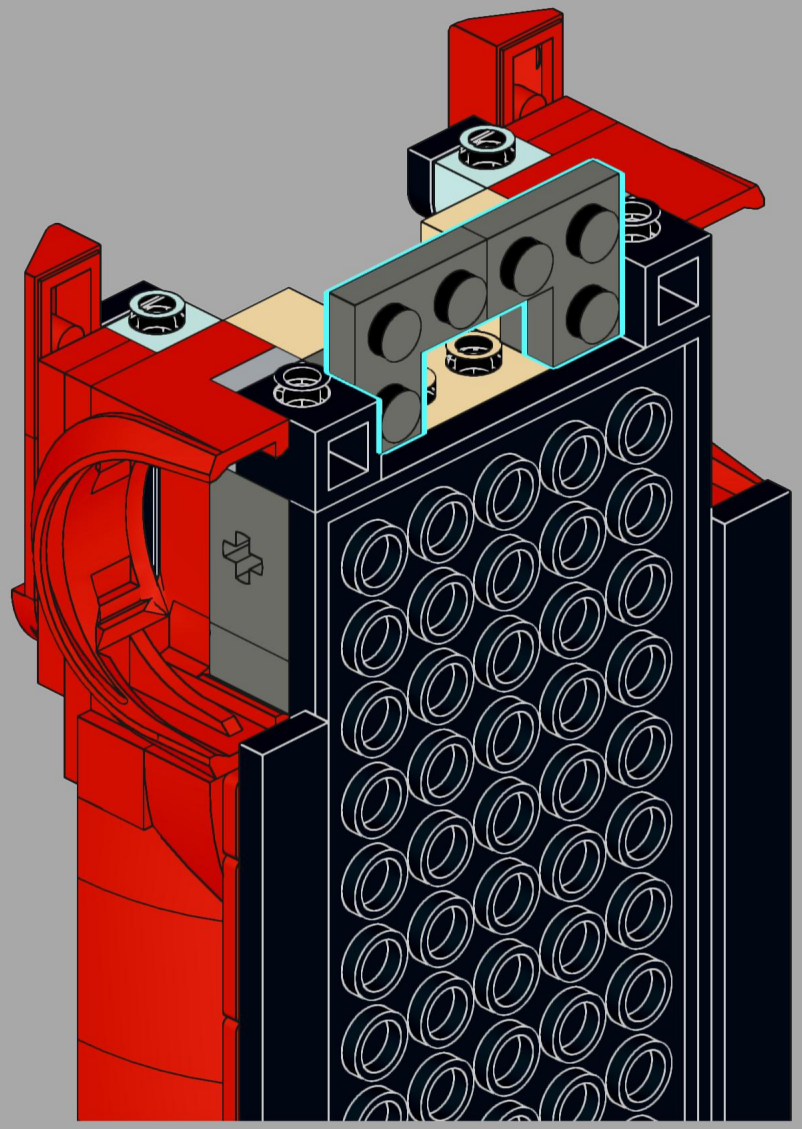

44

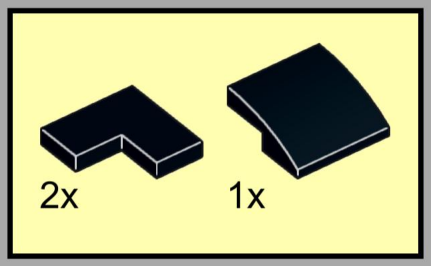

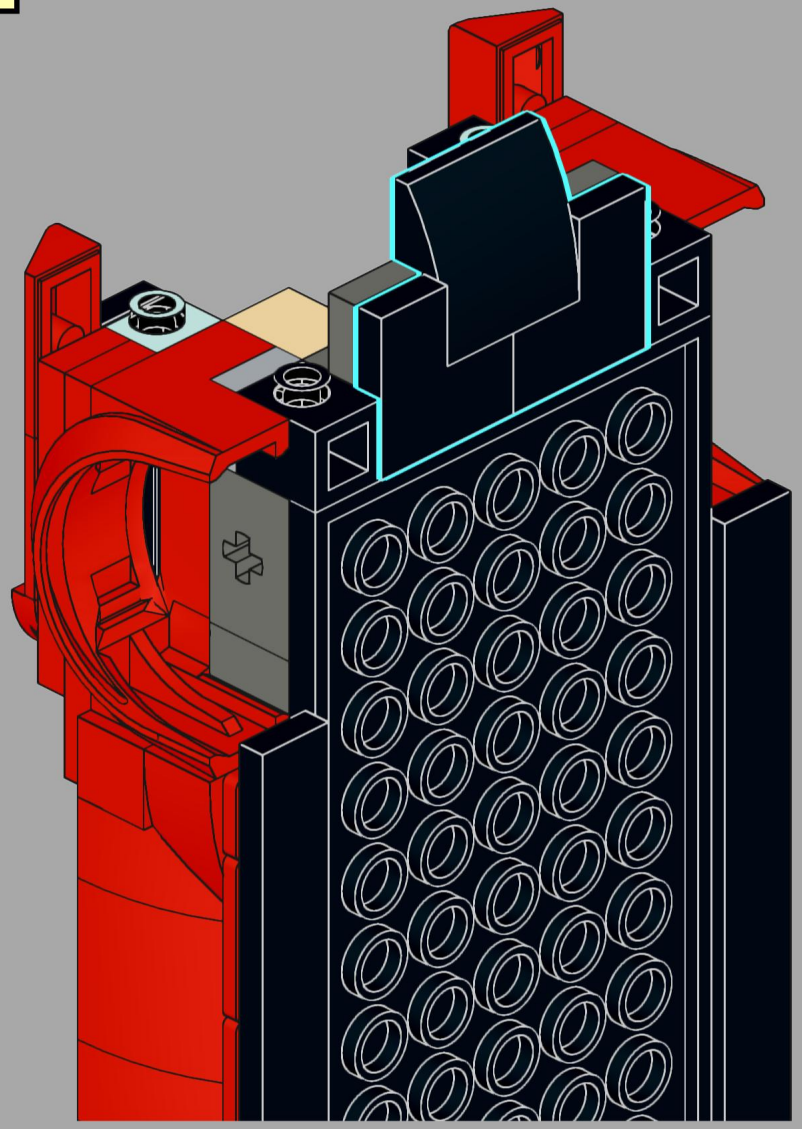

45

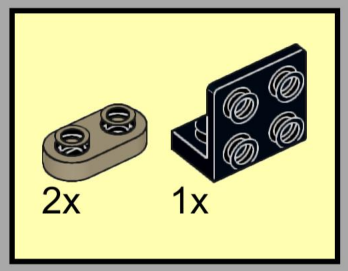

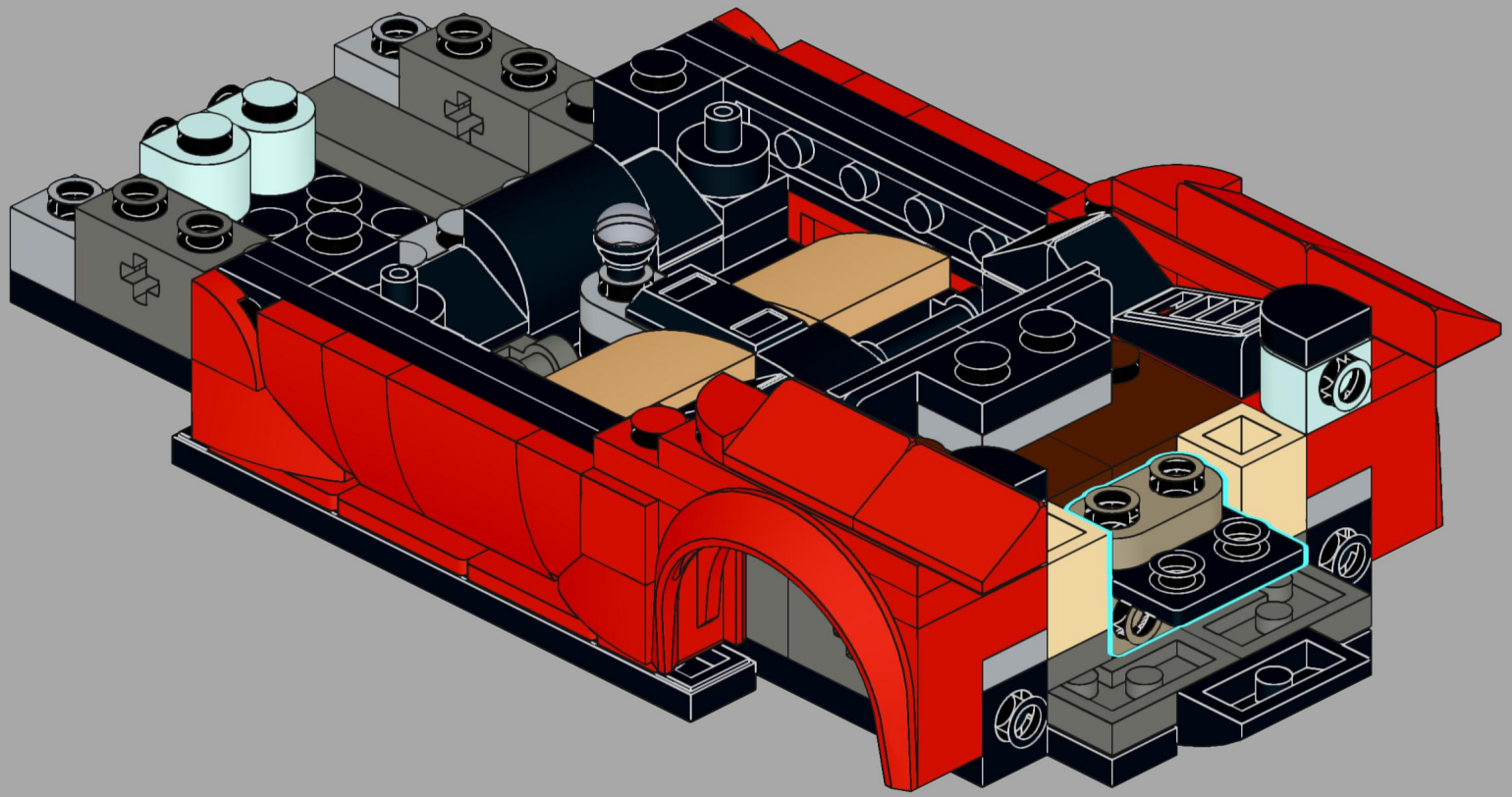

46

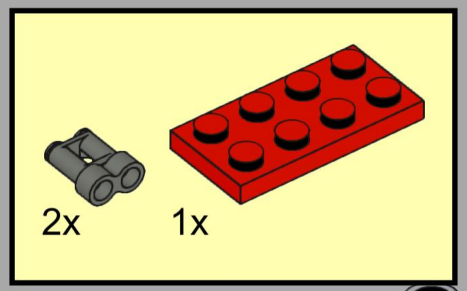

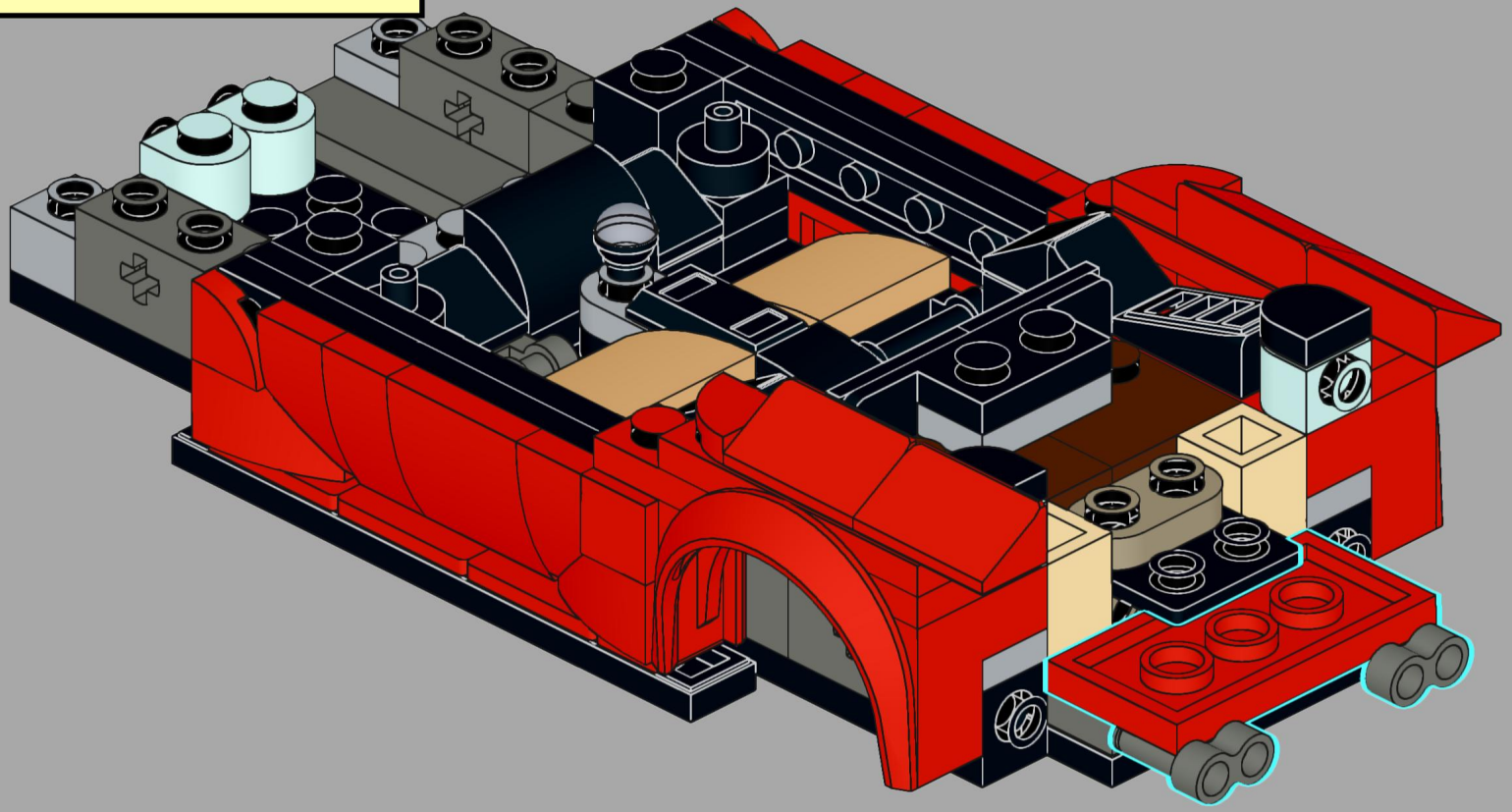

47

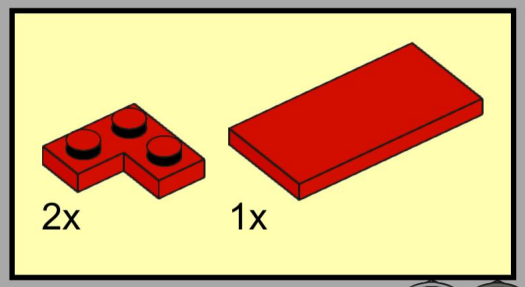

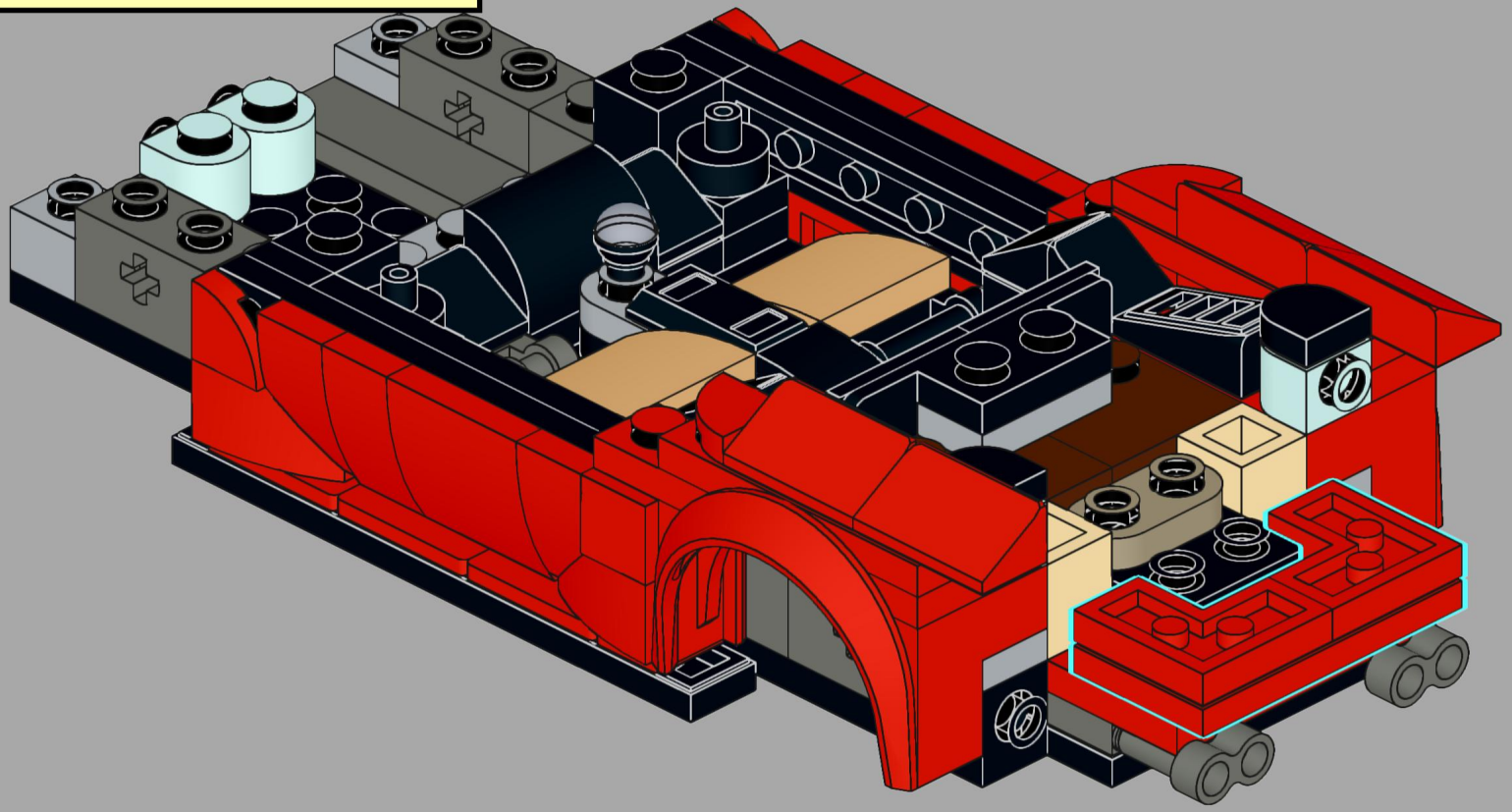

48

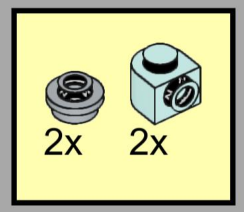

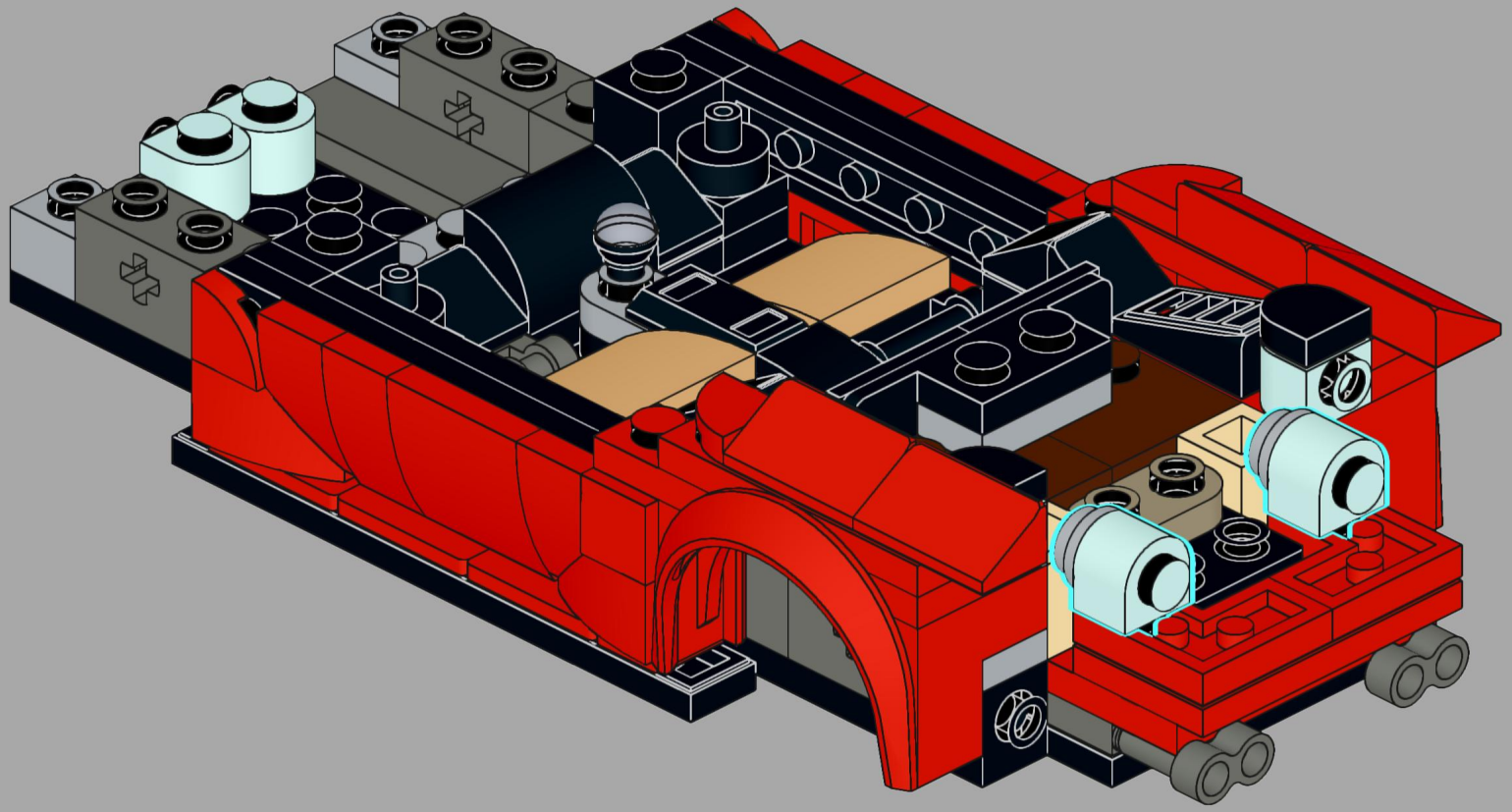

49

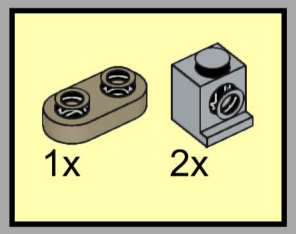

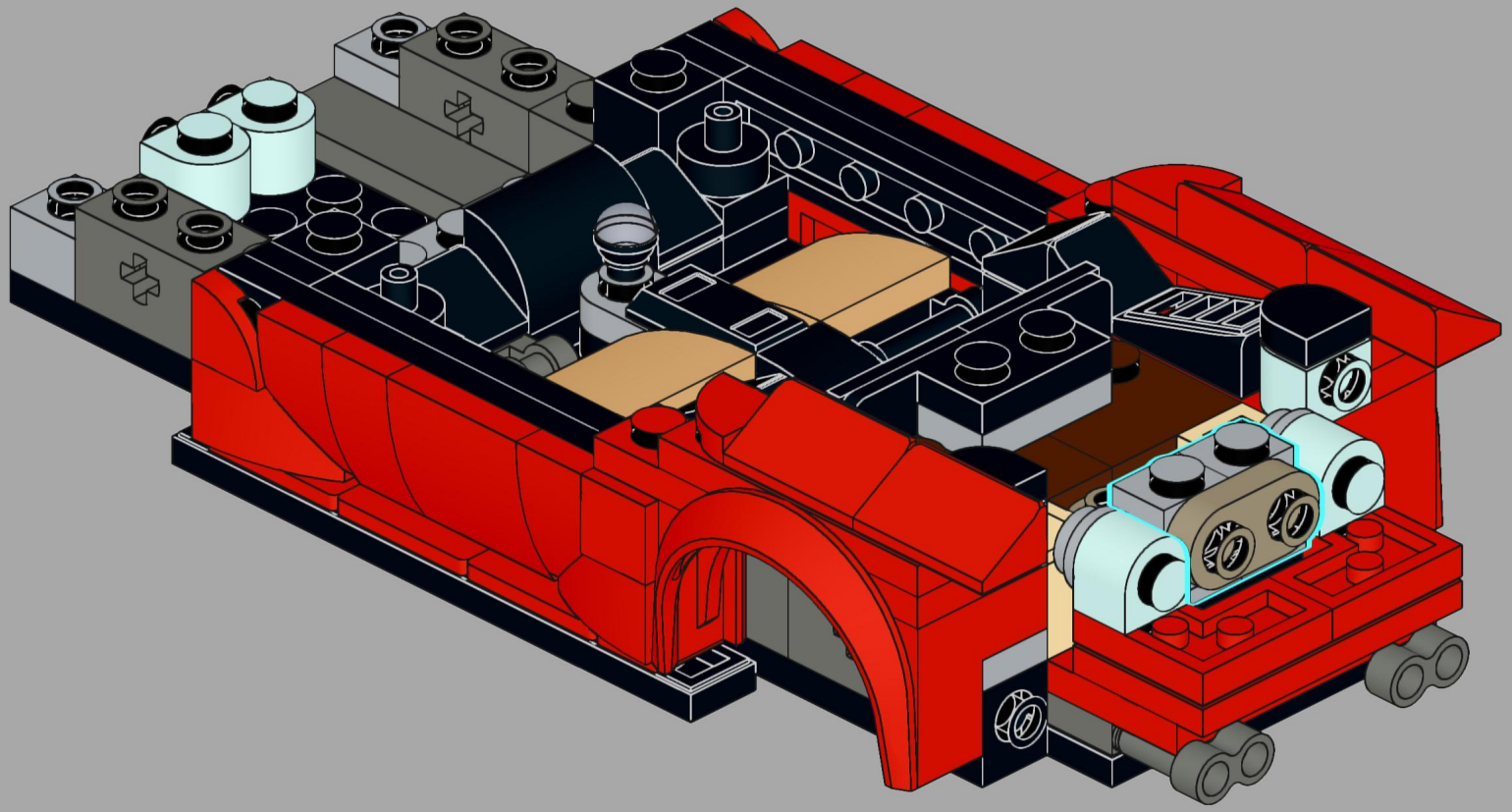

50

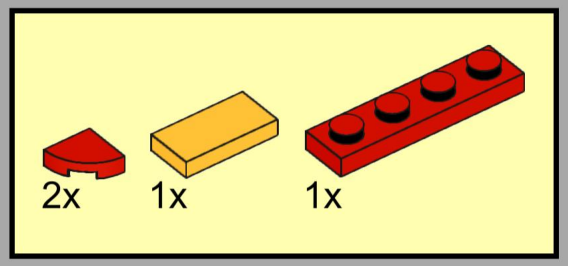

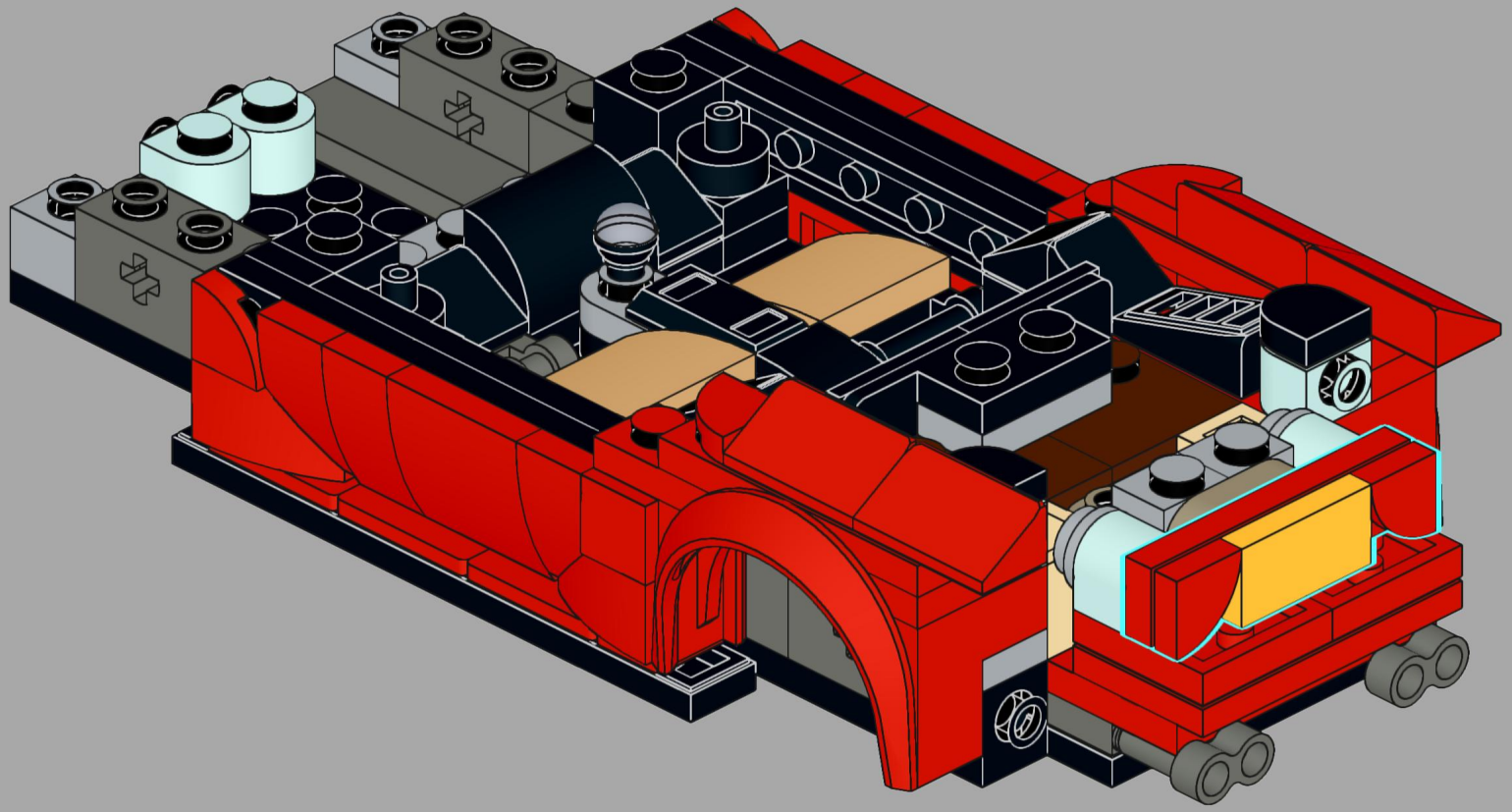

51

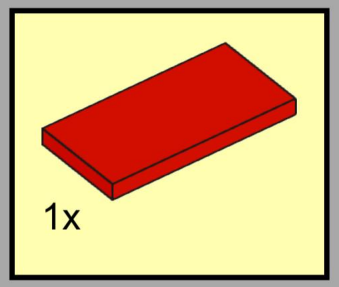

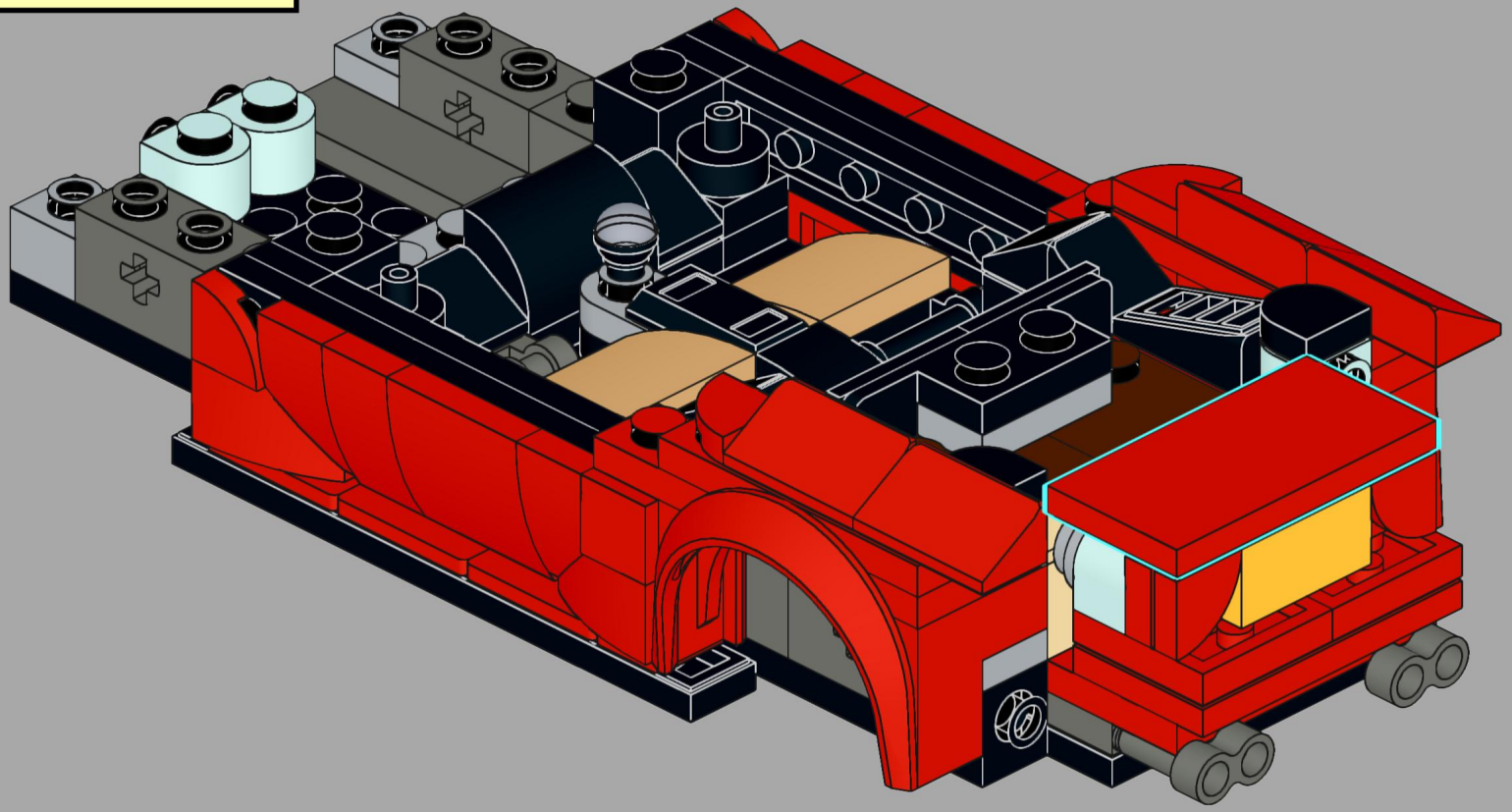

52

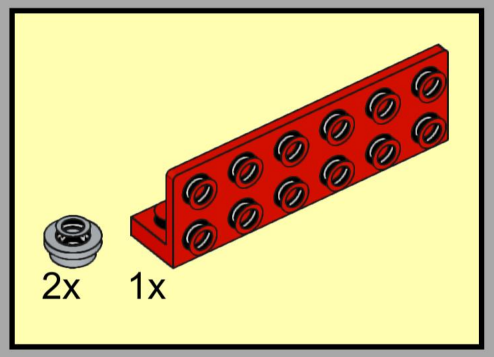

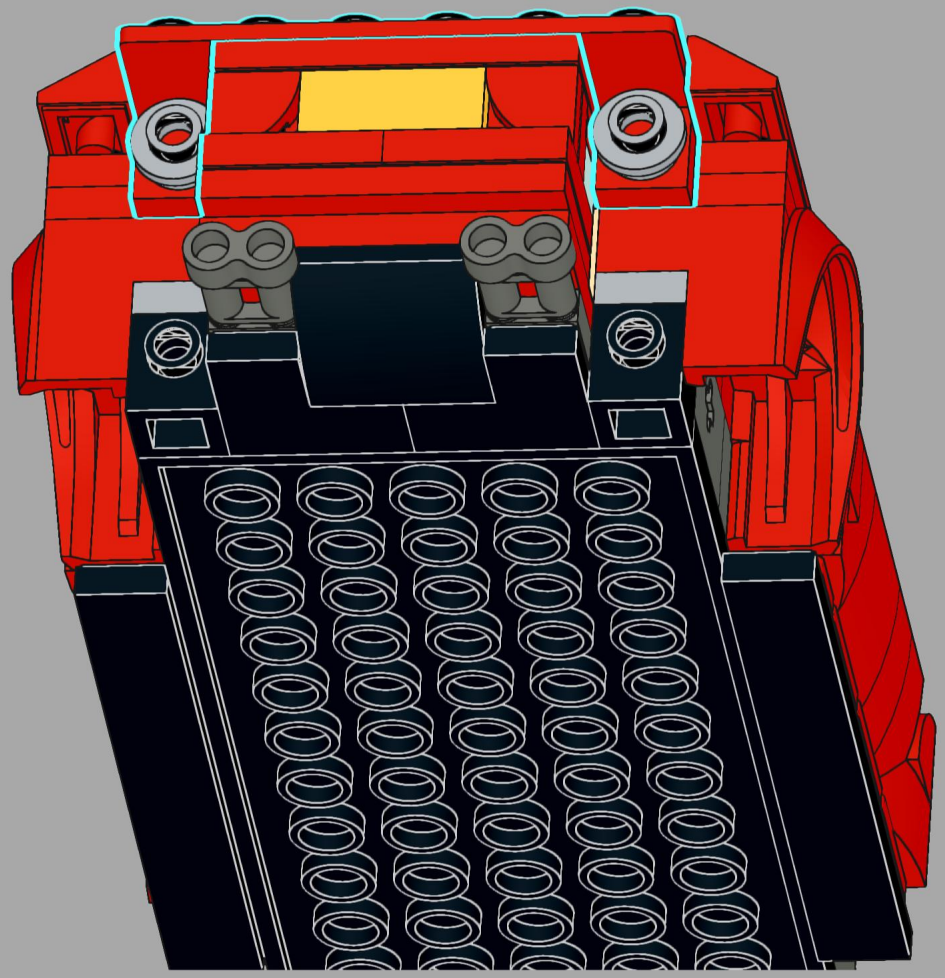

53

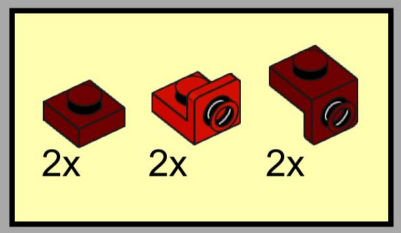

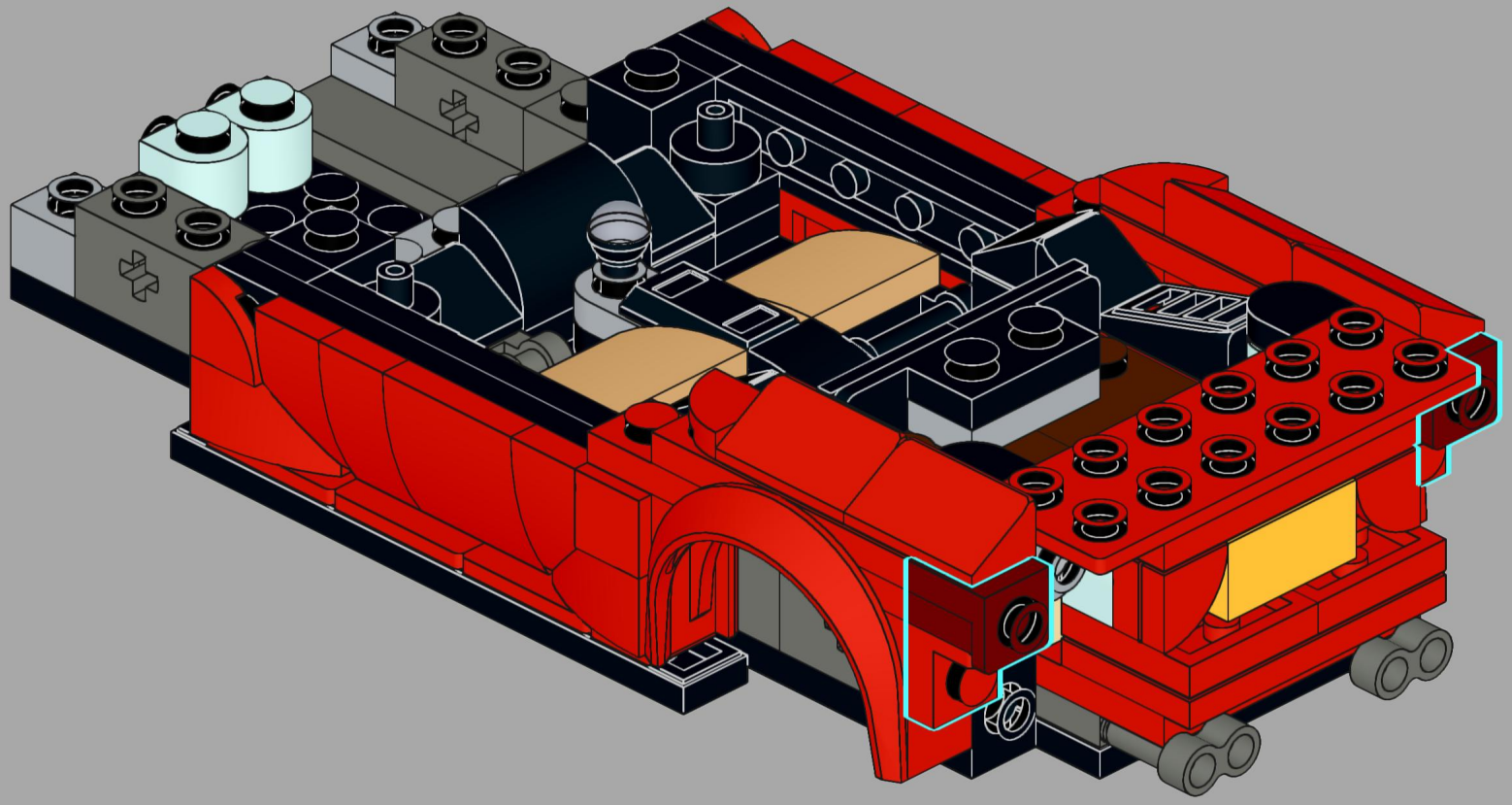

54

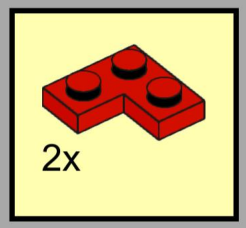

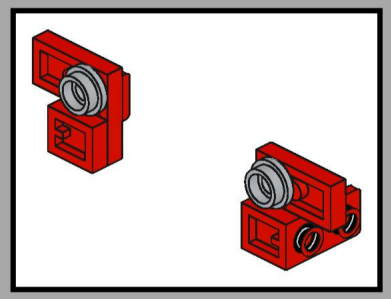

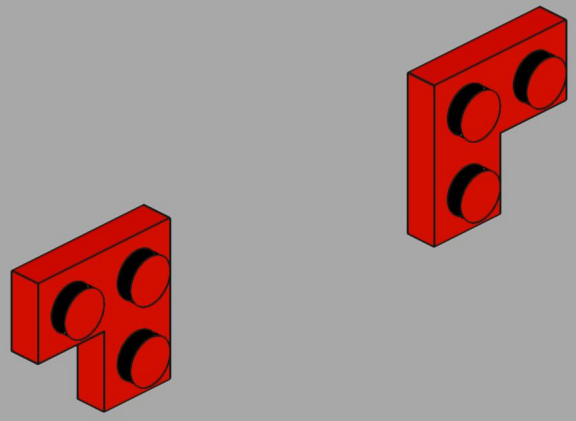

55

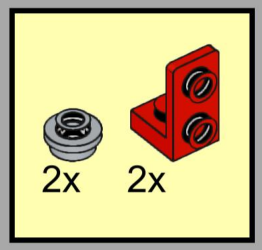

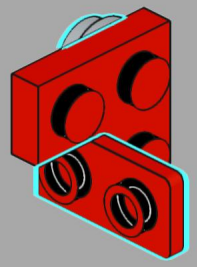

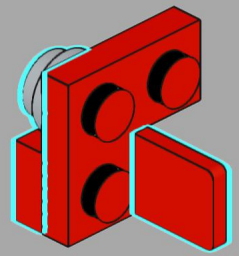

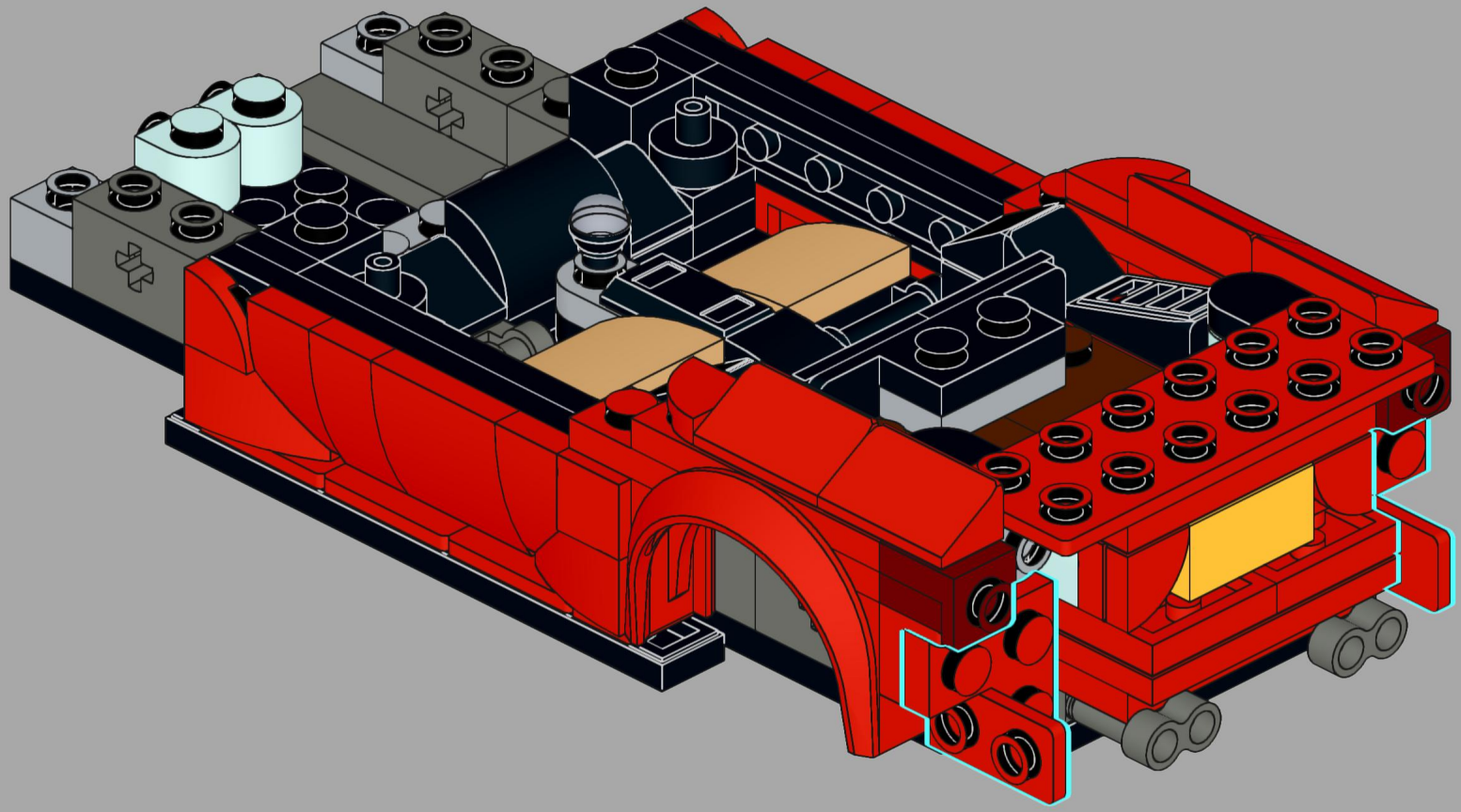

57

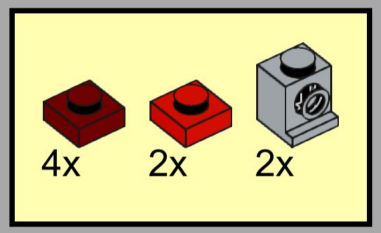

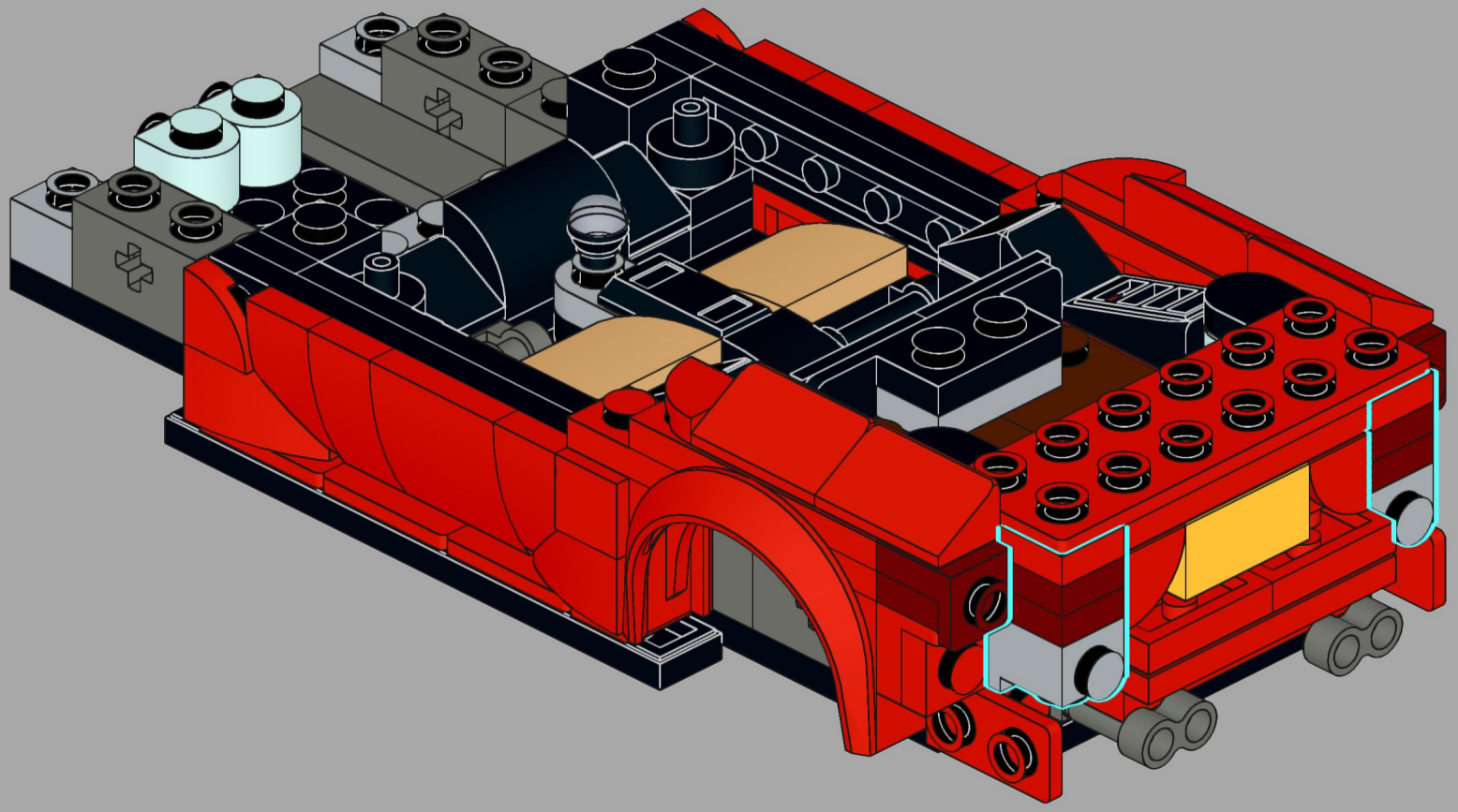

58

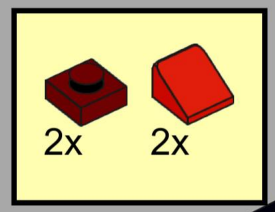

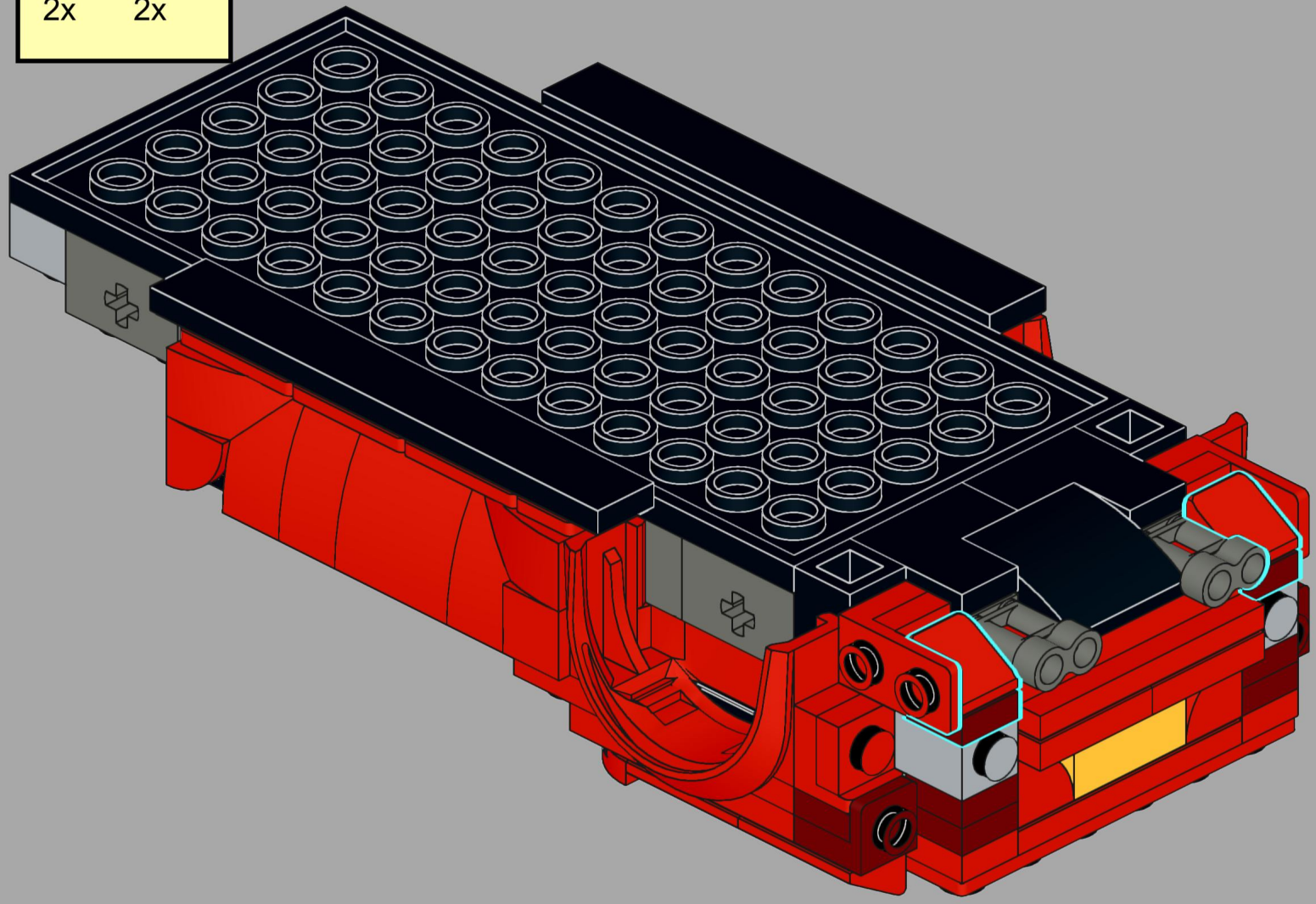

59

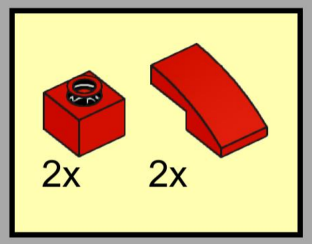

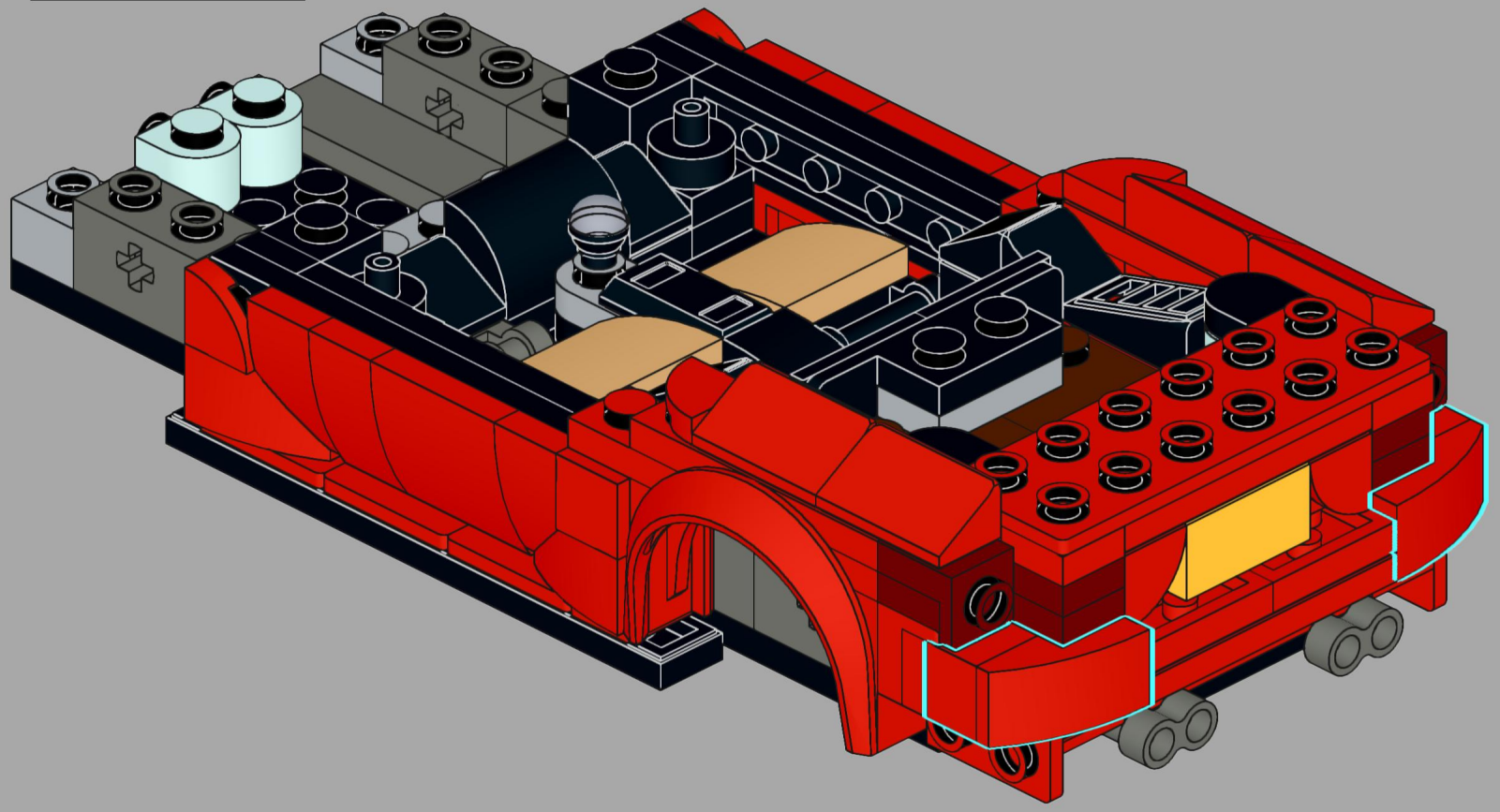

60

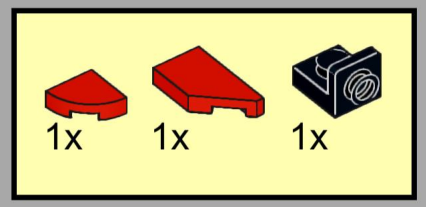

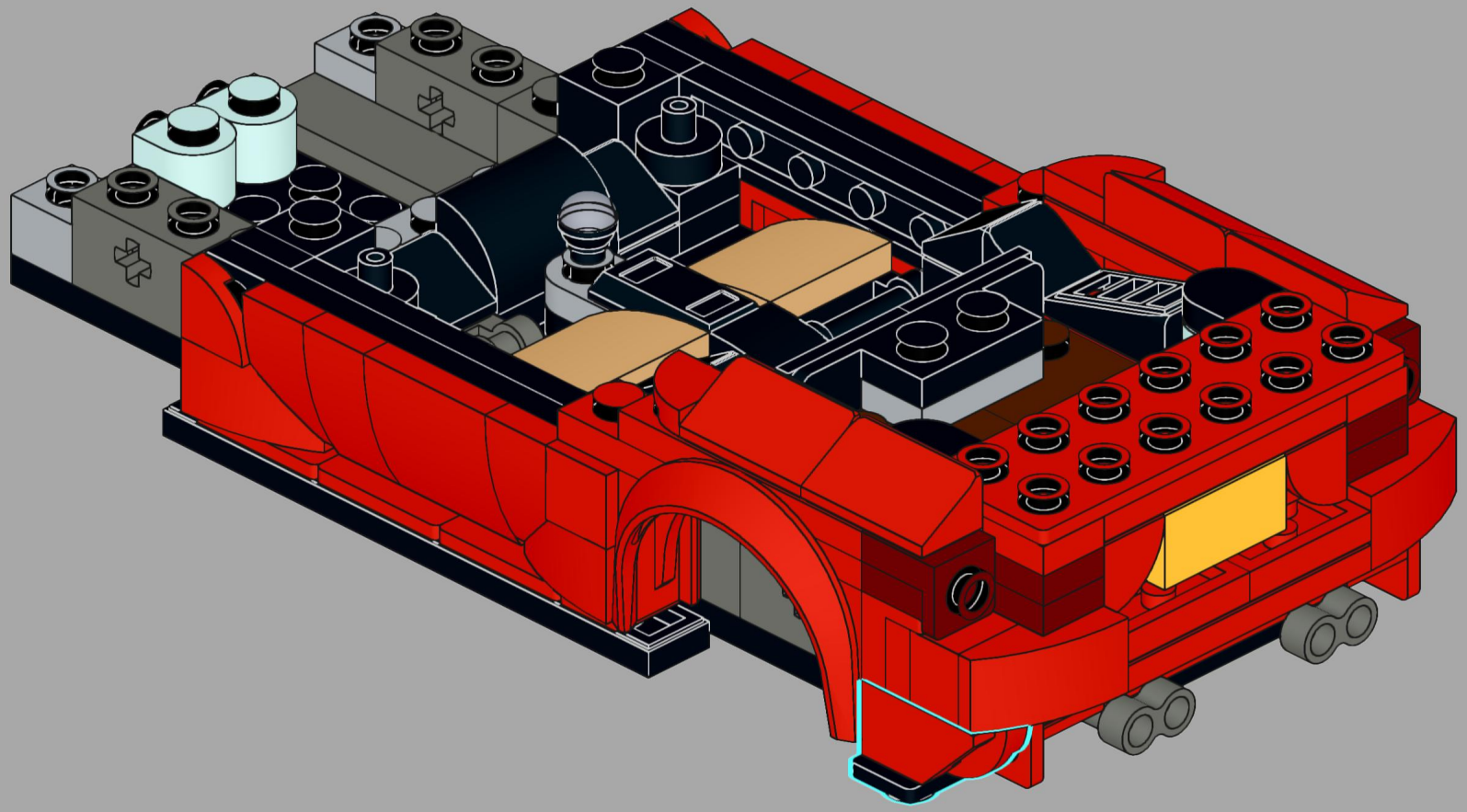

61

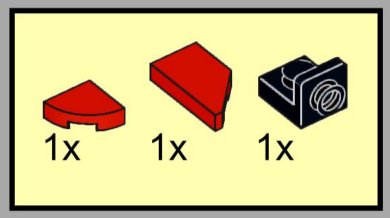

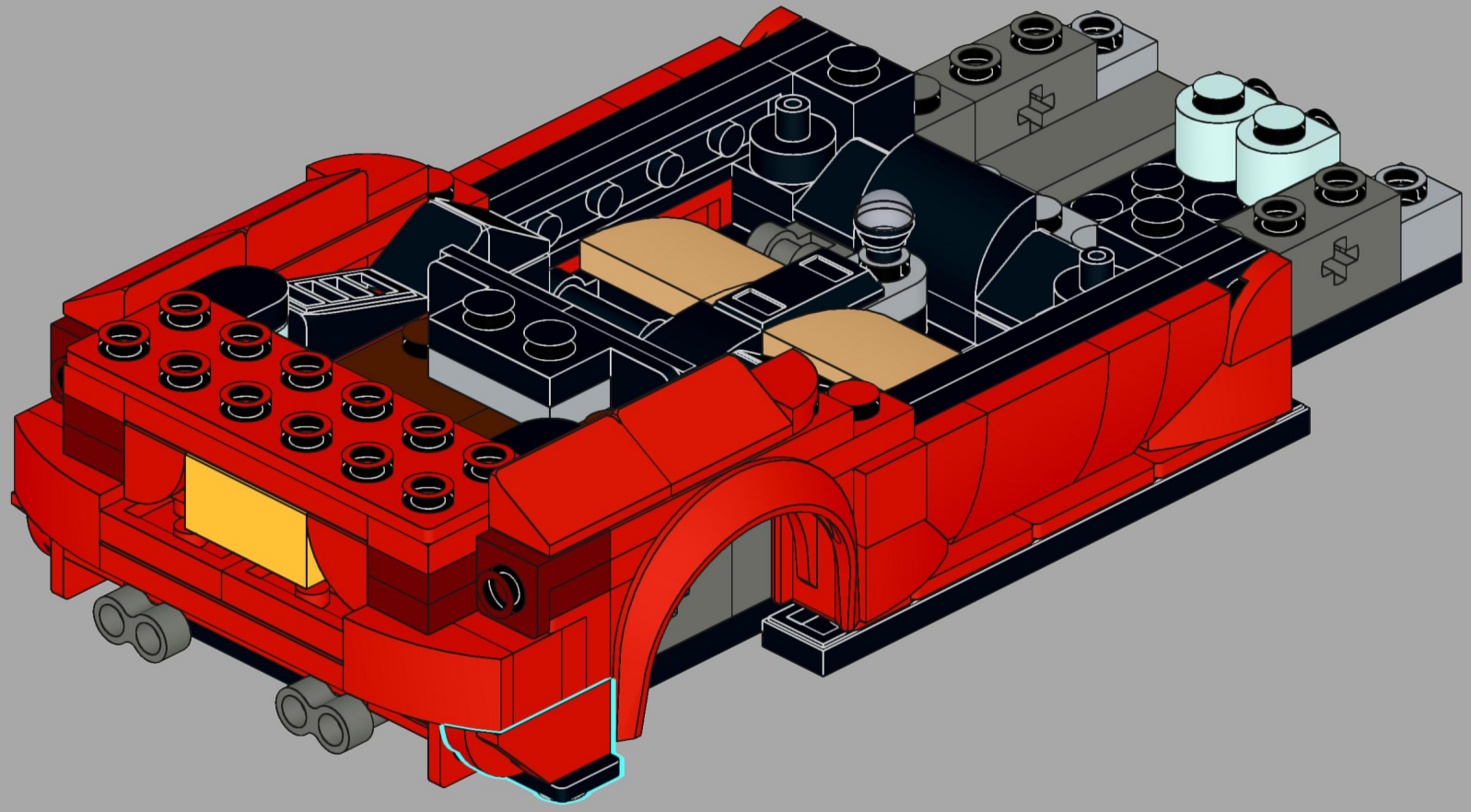

62

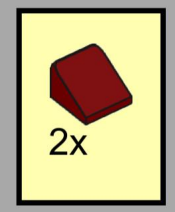

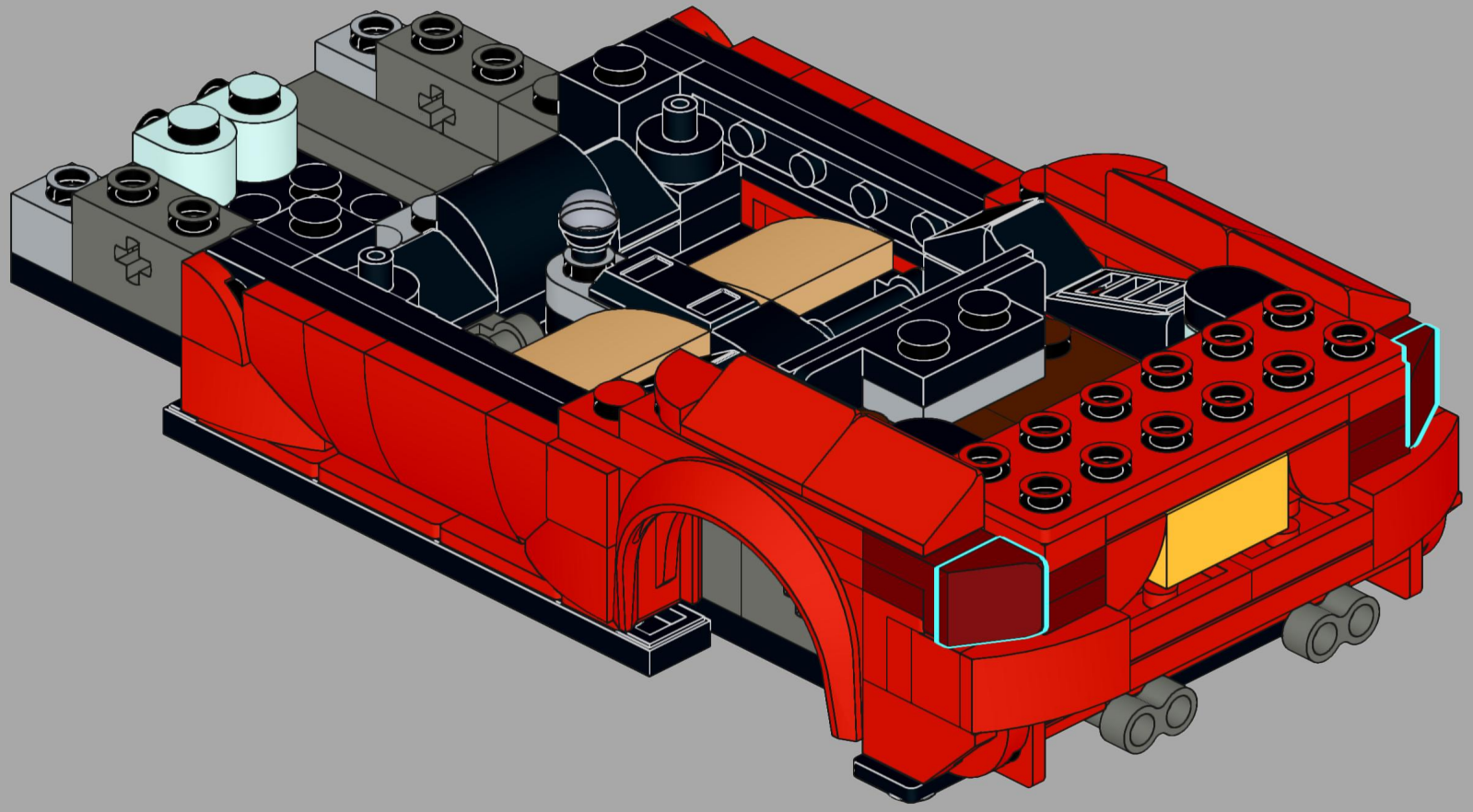

63

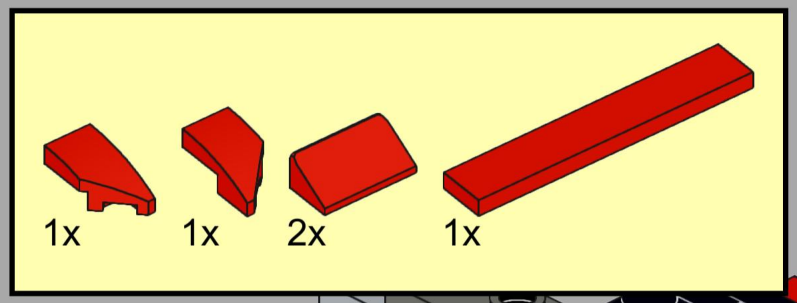

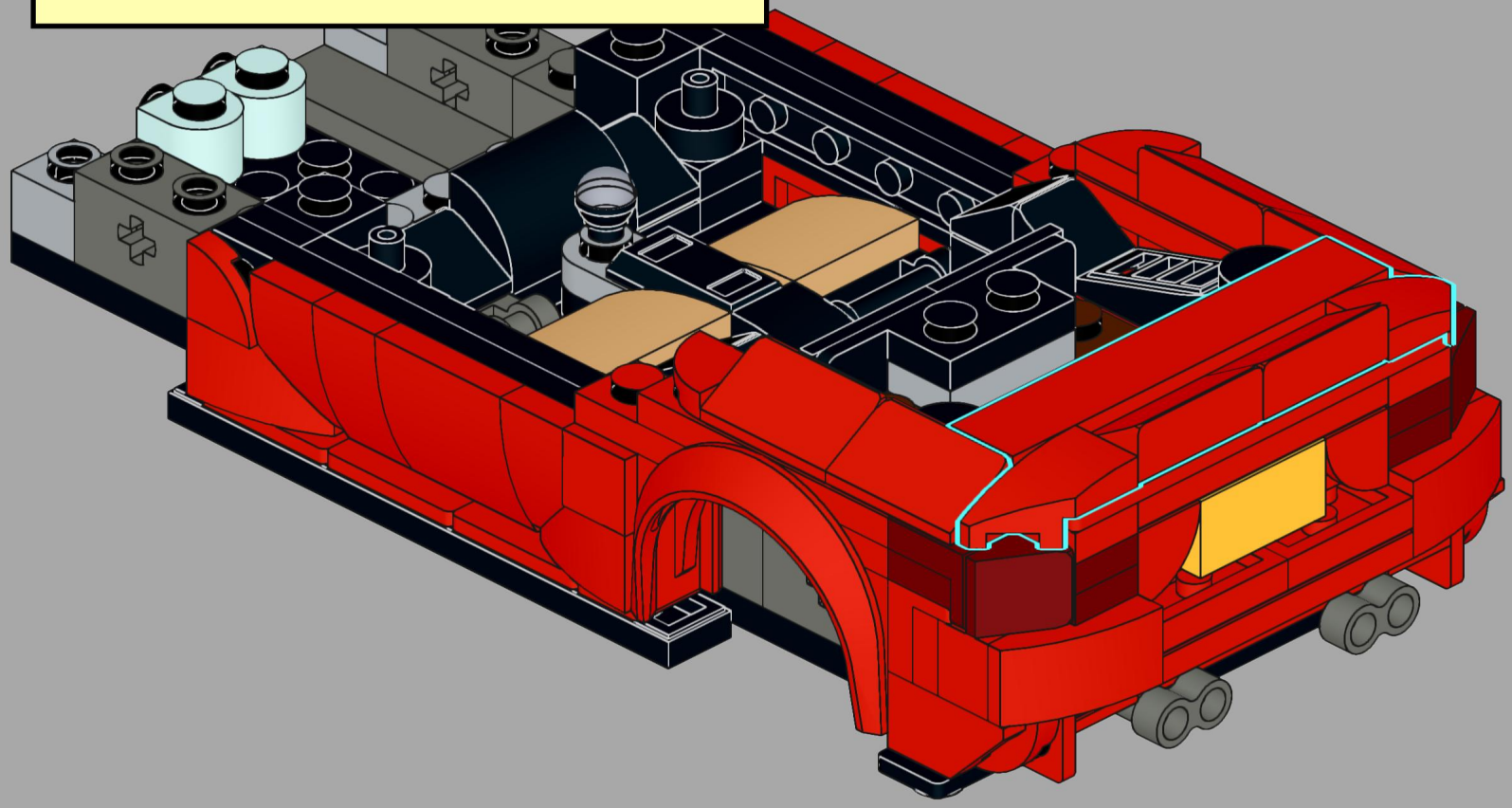

64

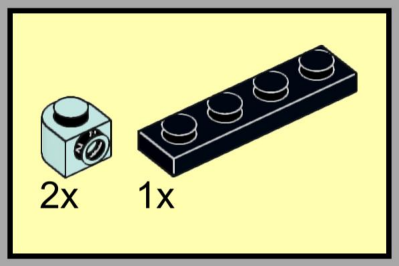

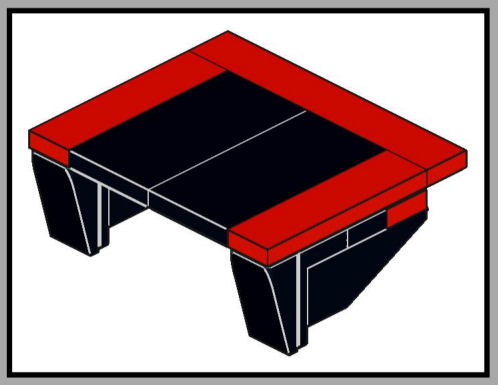

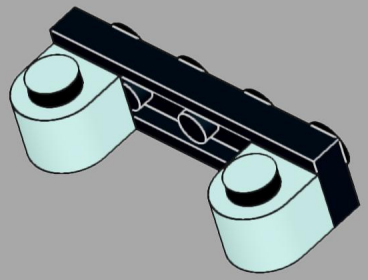

65

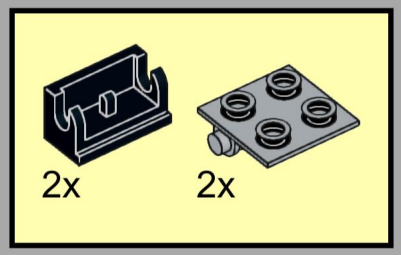

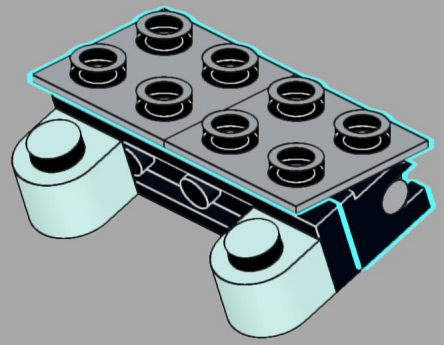

66

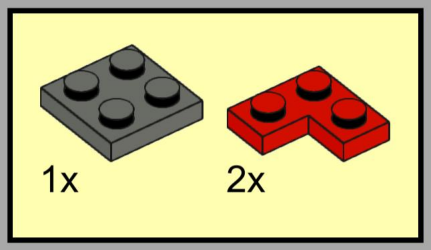

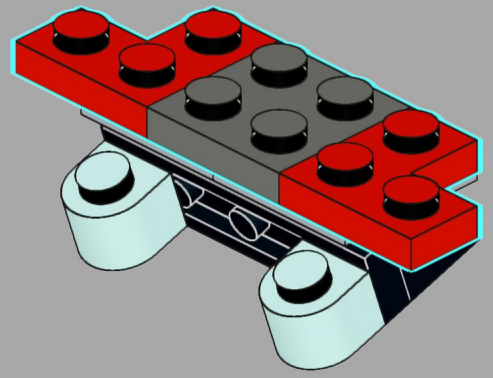

67

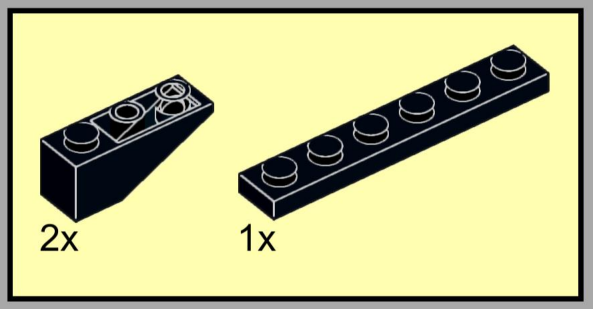

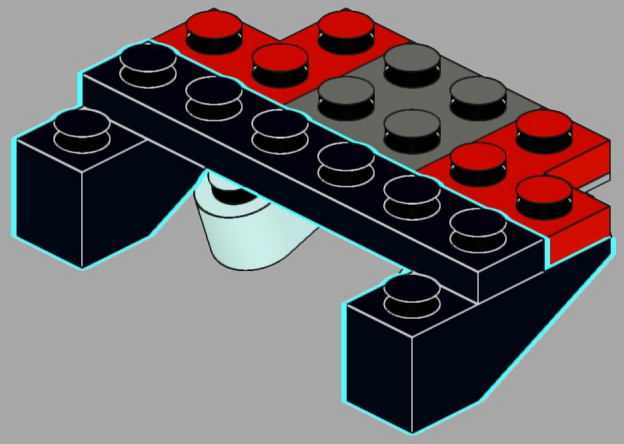

68

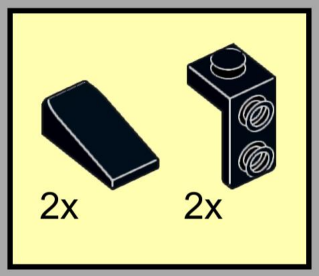

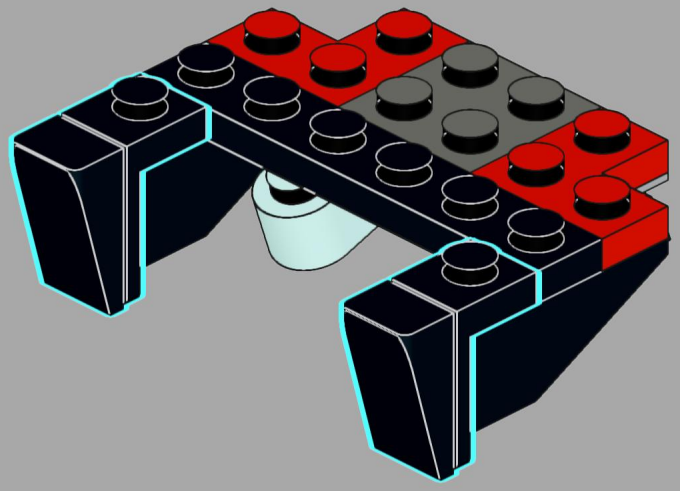

69

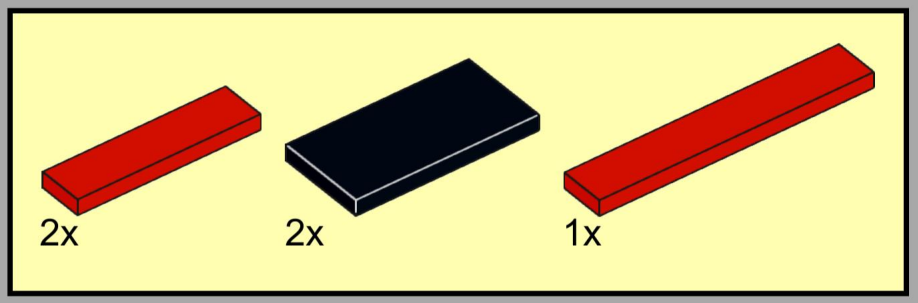

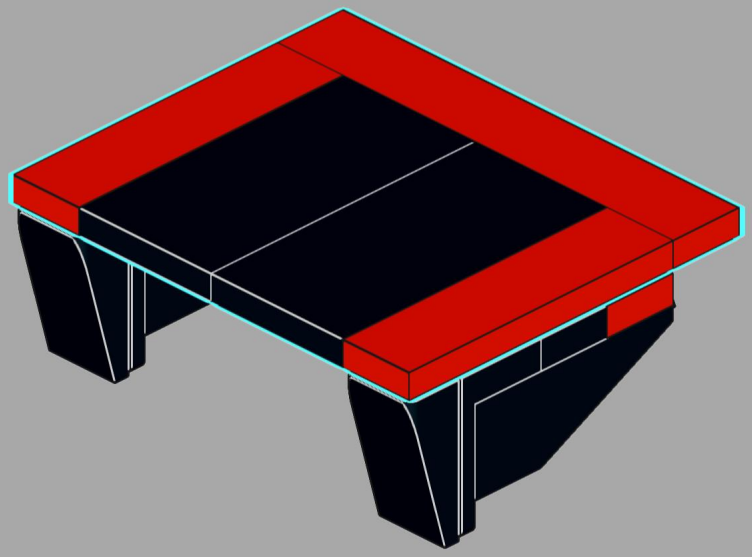

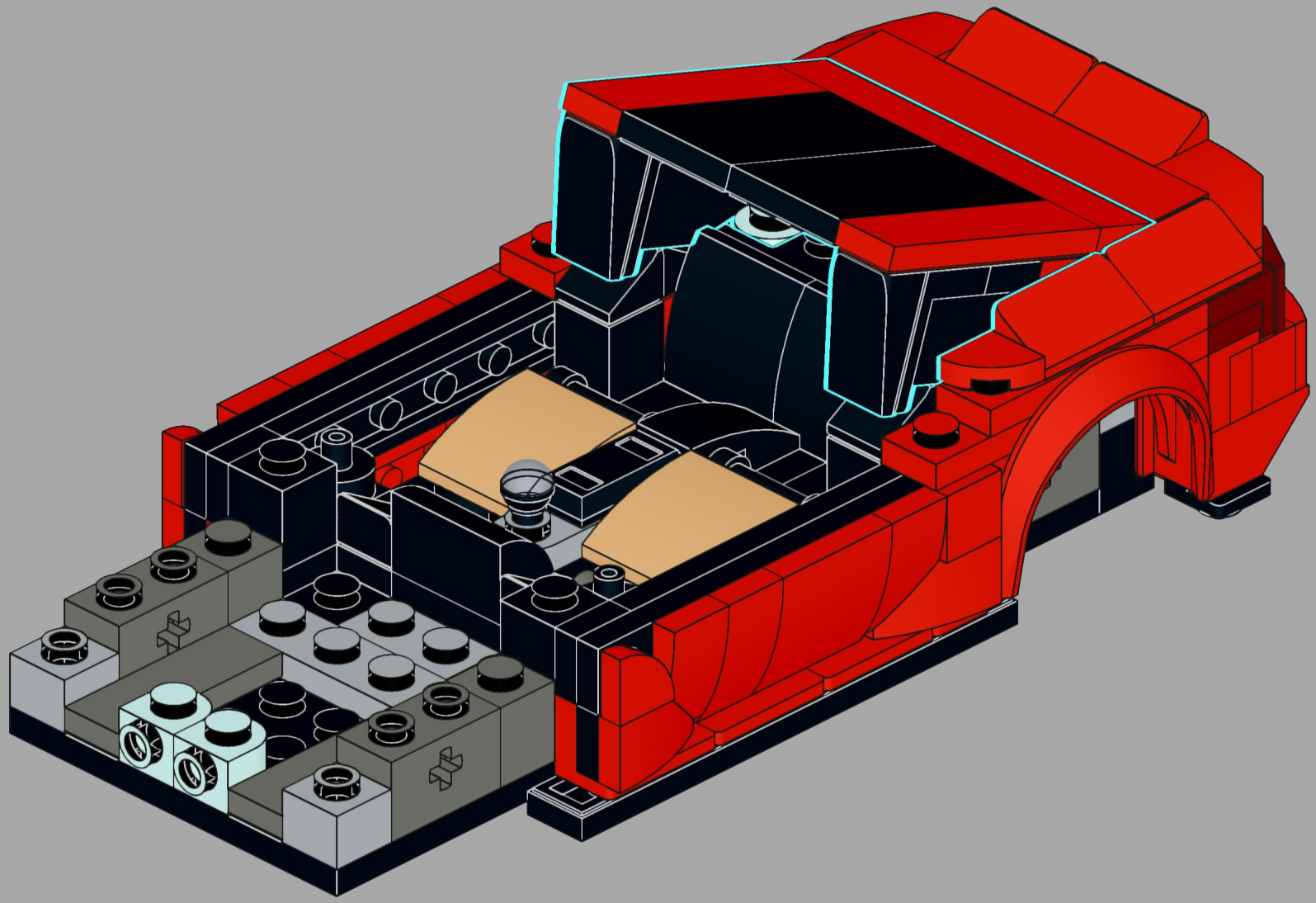

71

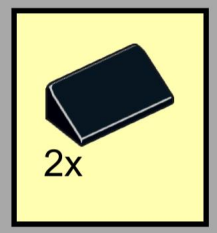

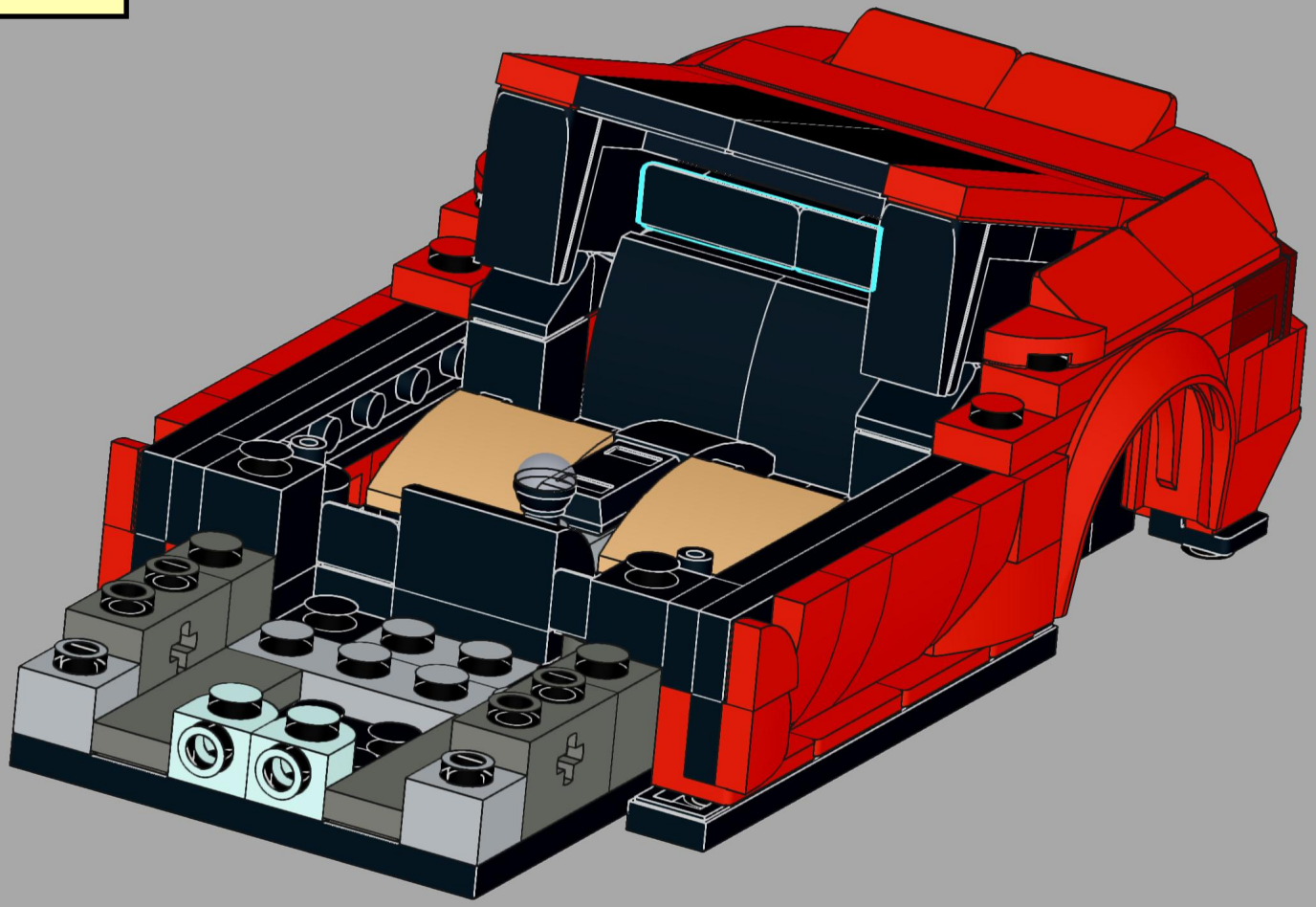

72

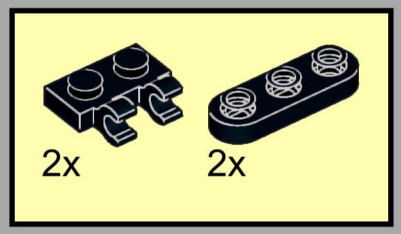

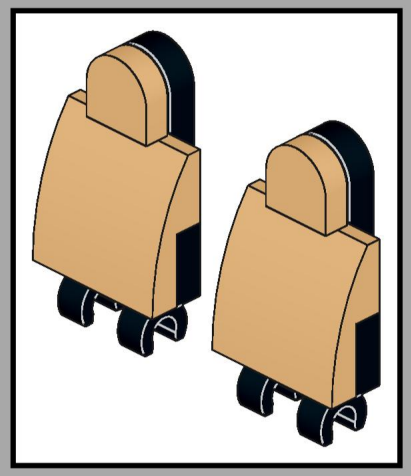

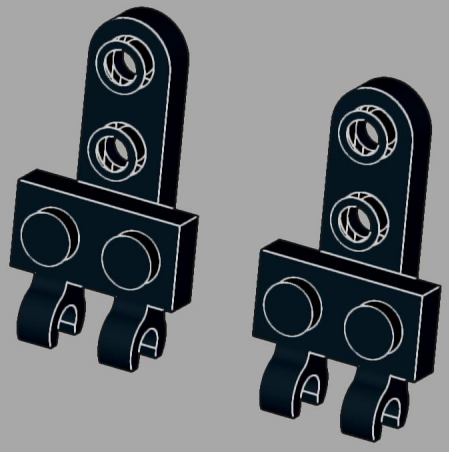

73

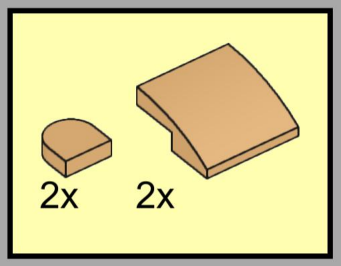

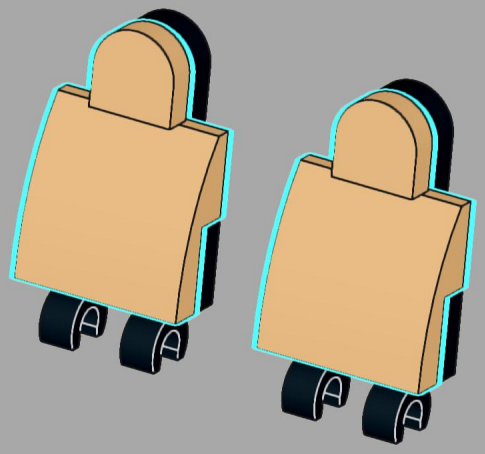

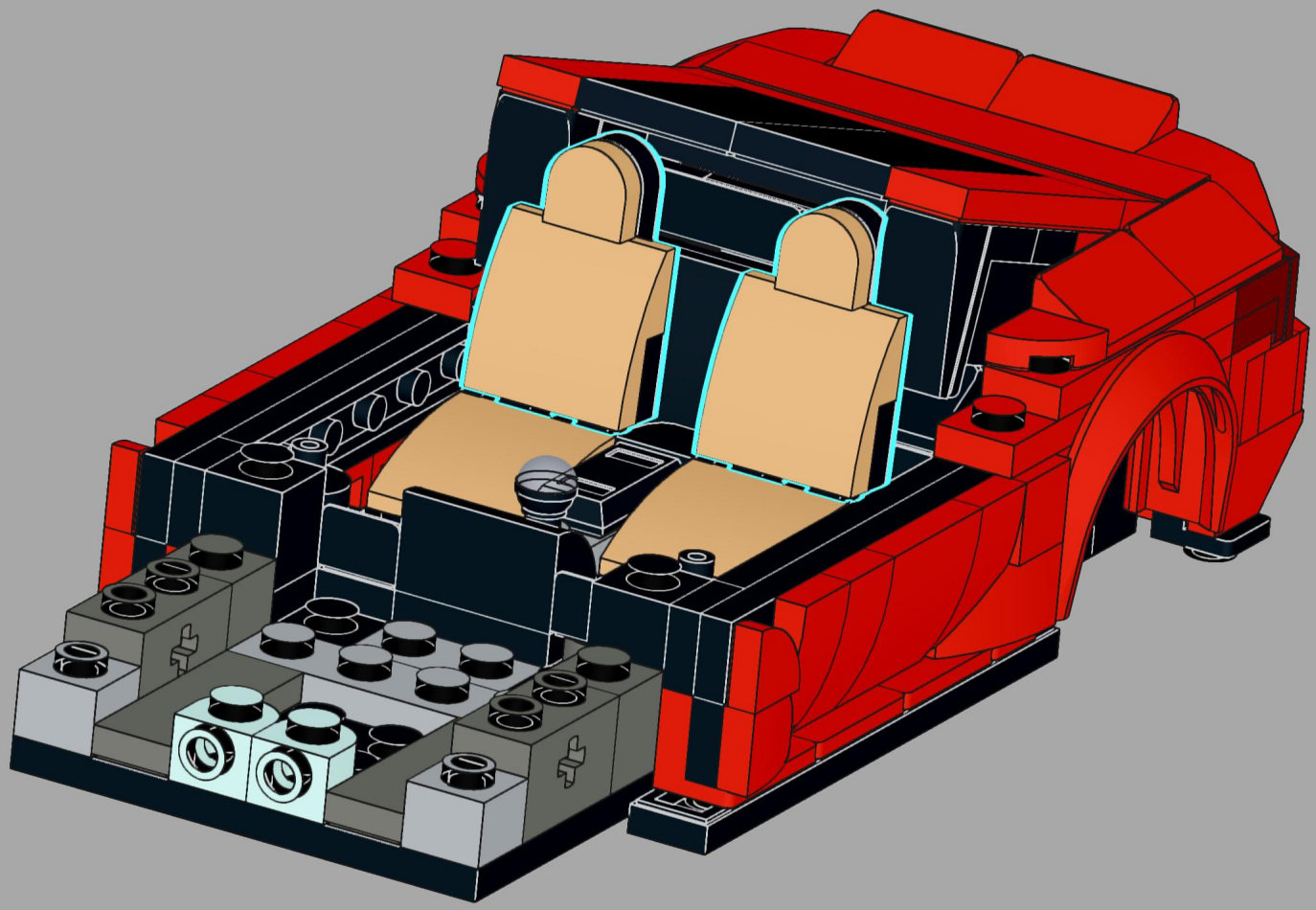

75

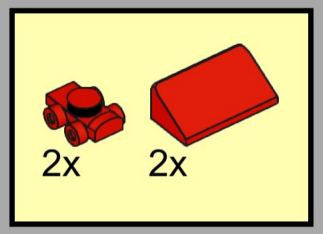

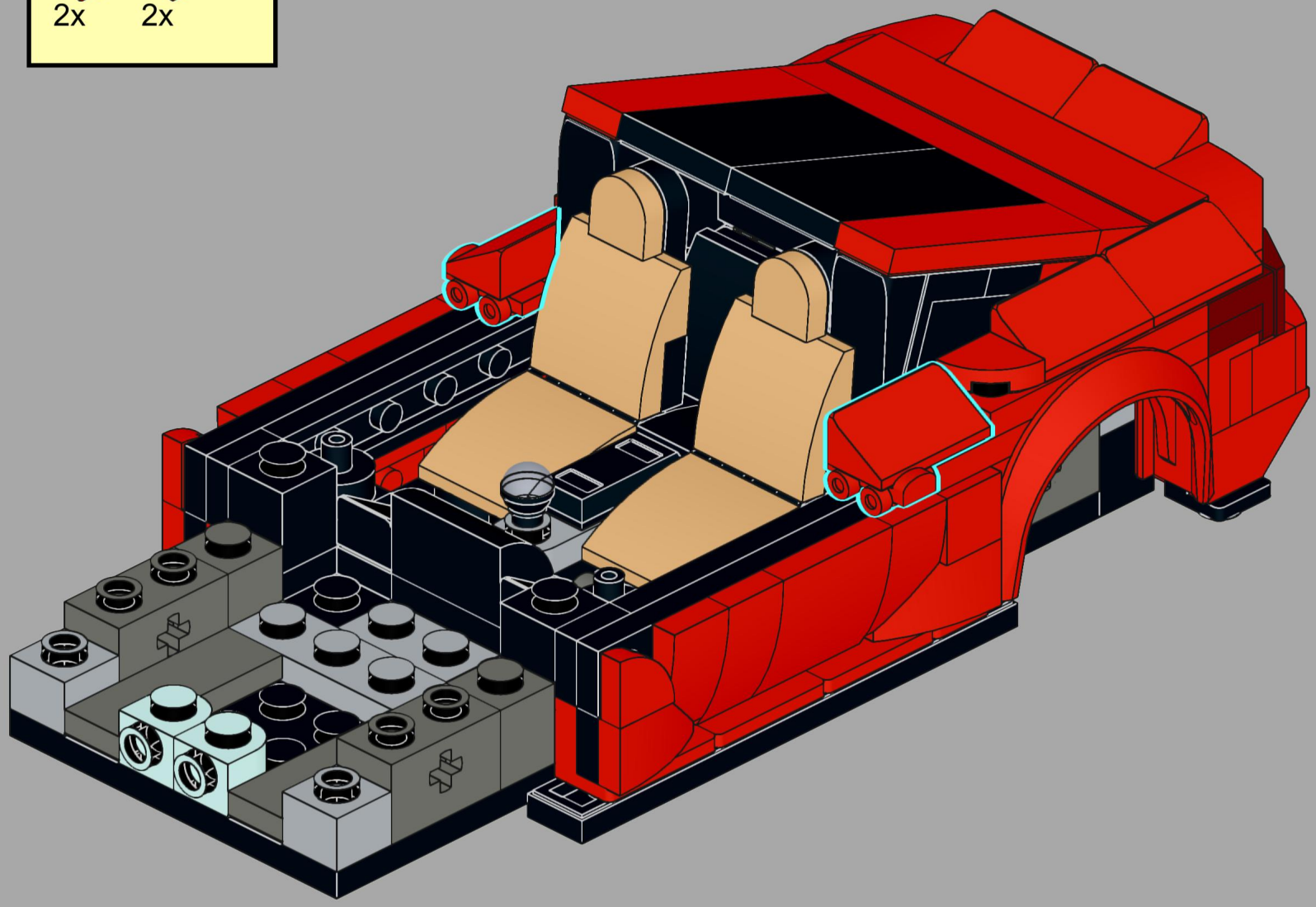

76

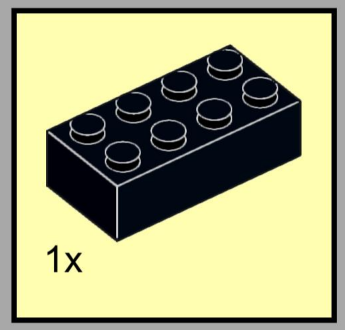

77

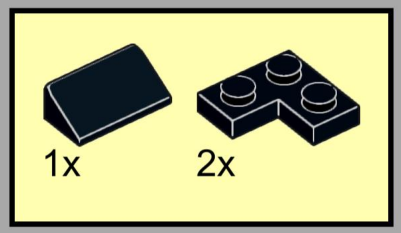

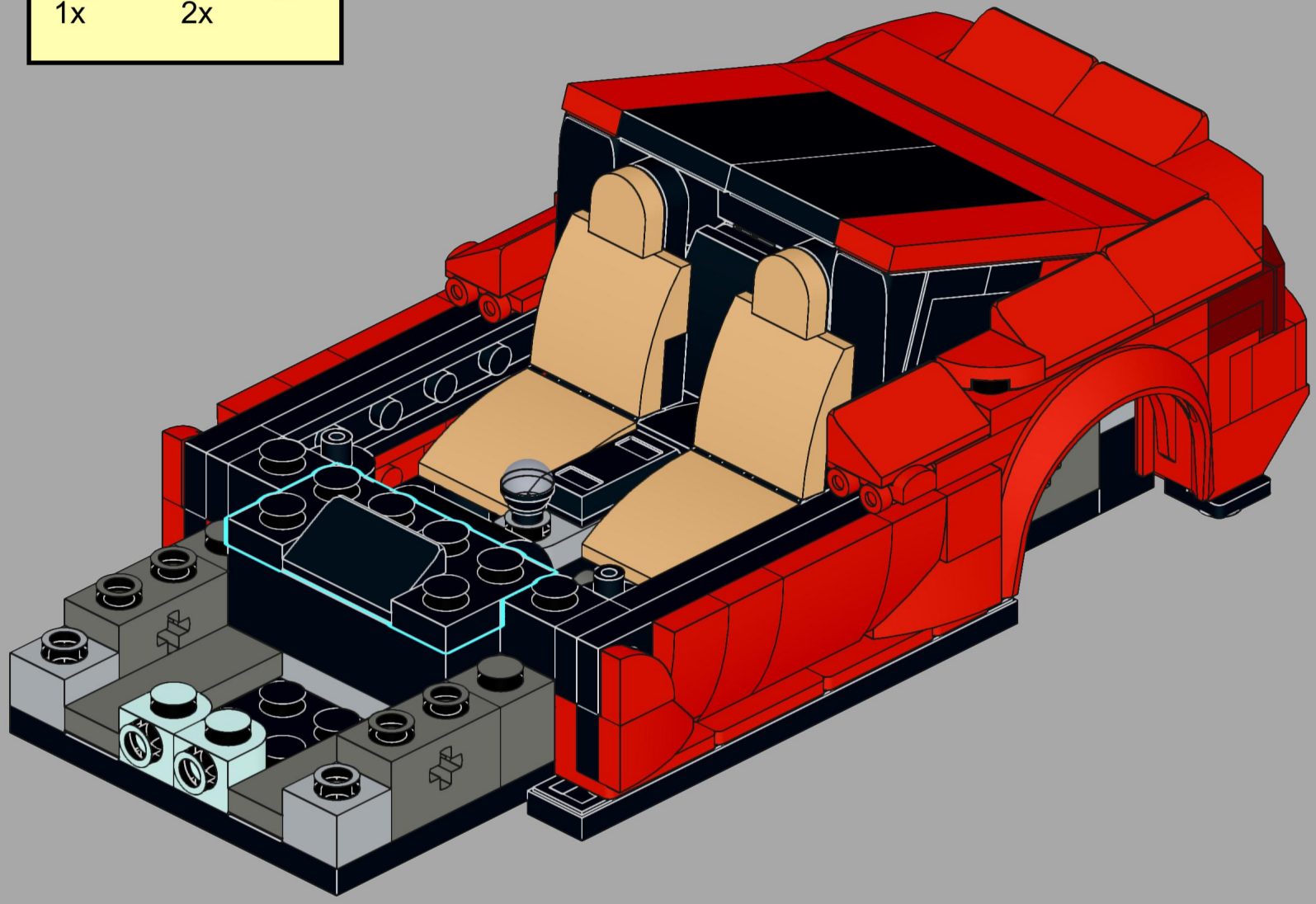

78

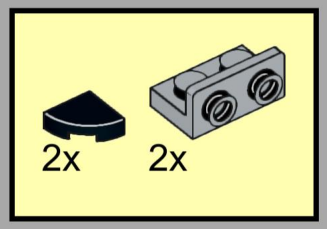

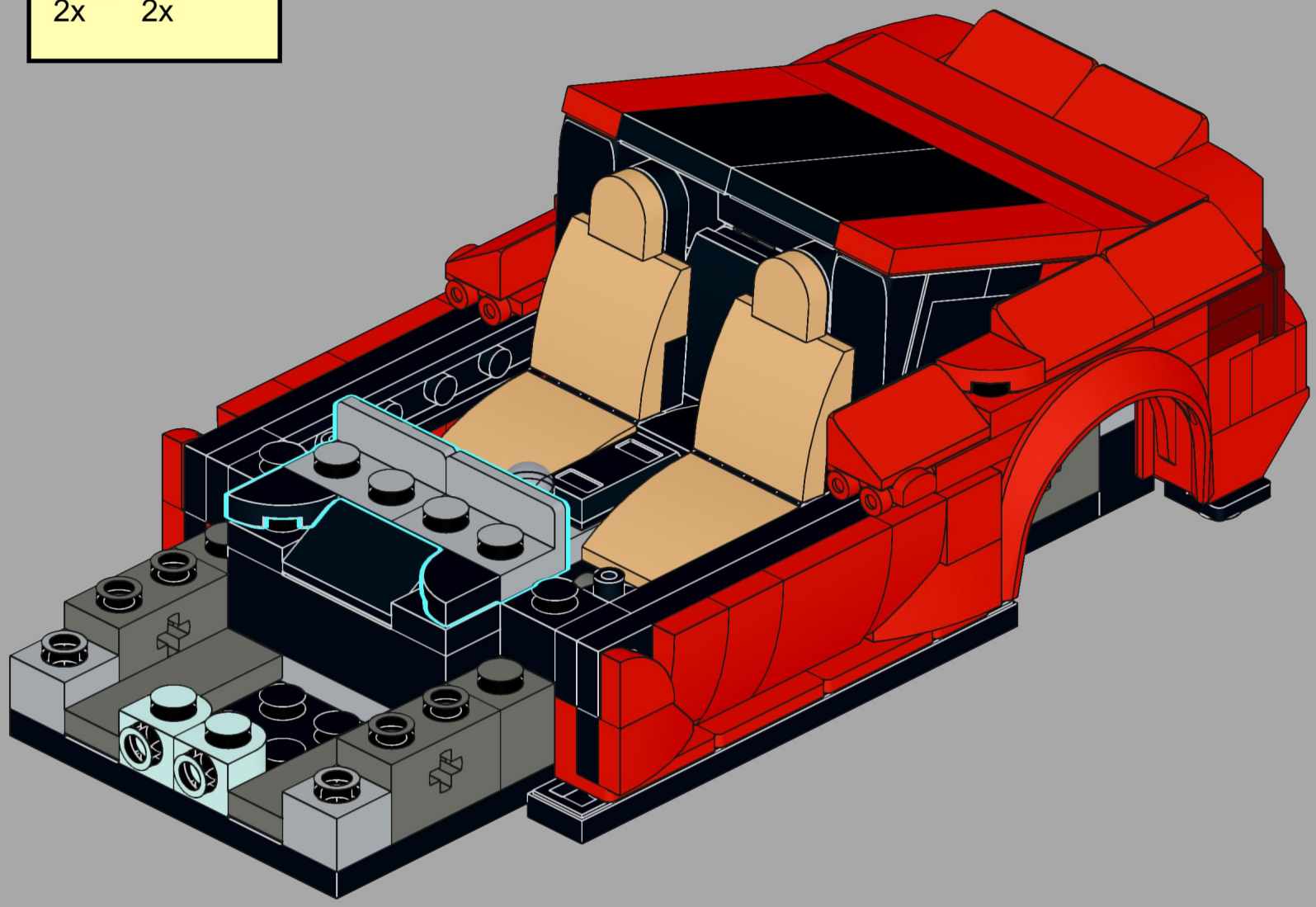

79

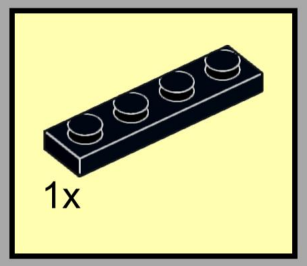

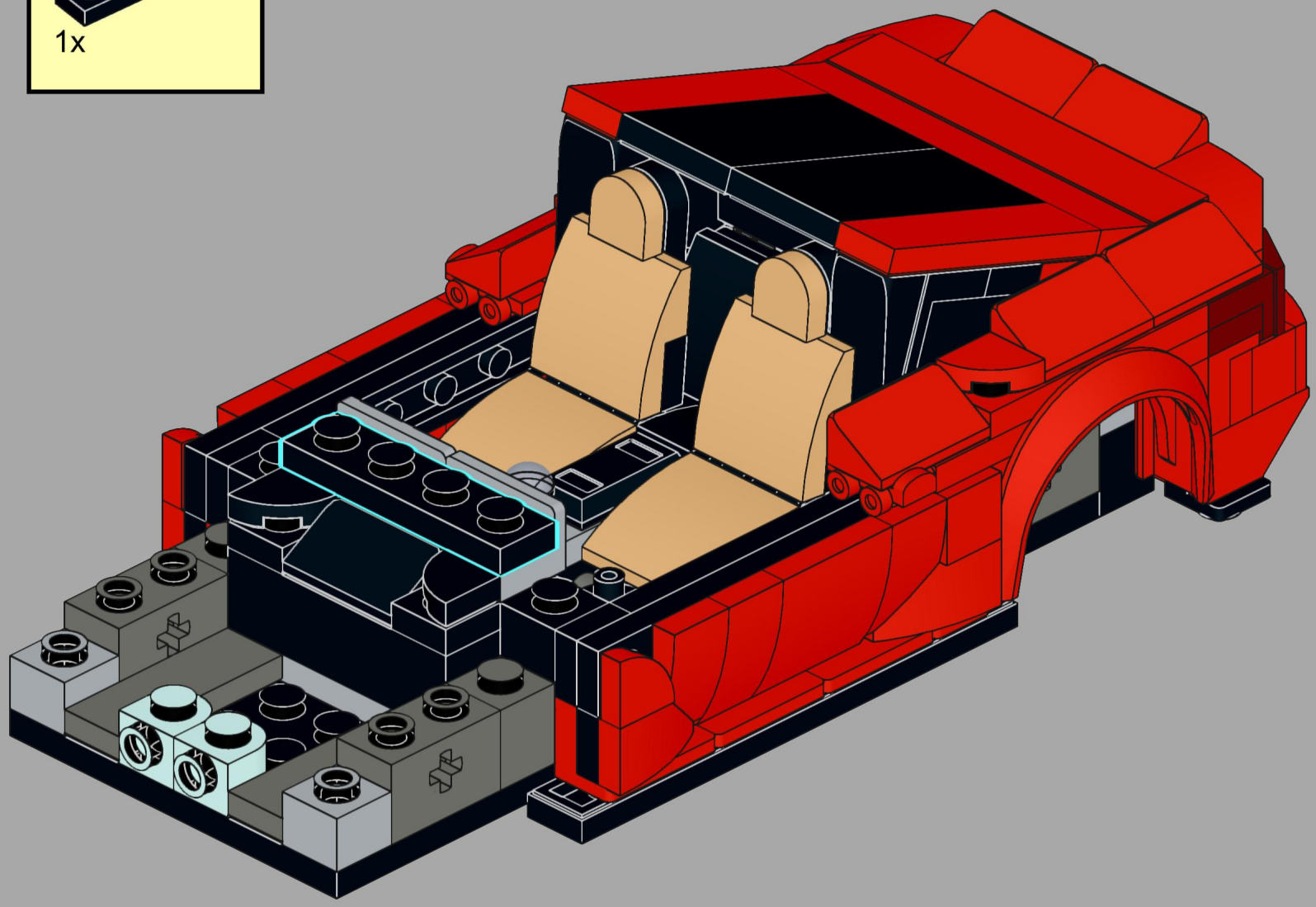

80

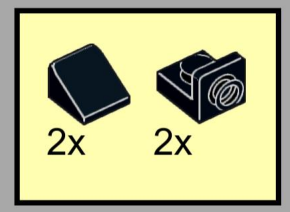

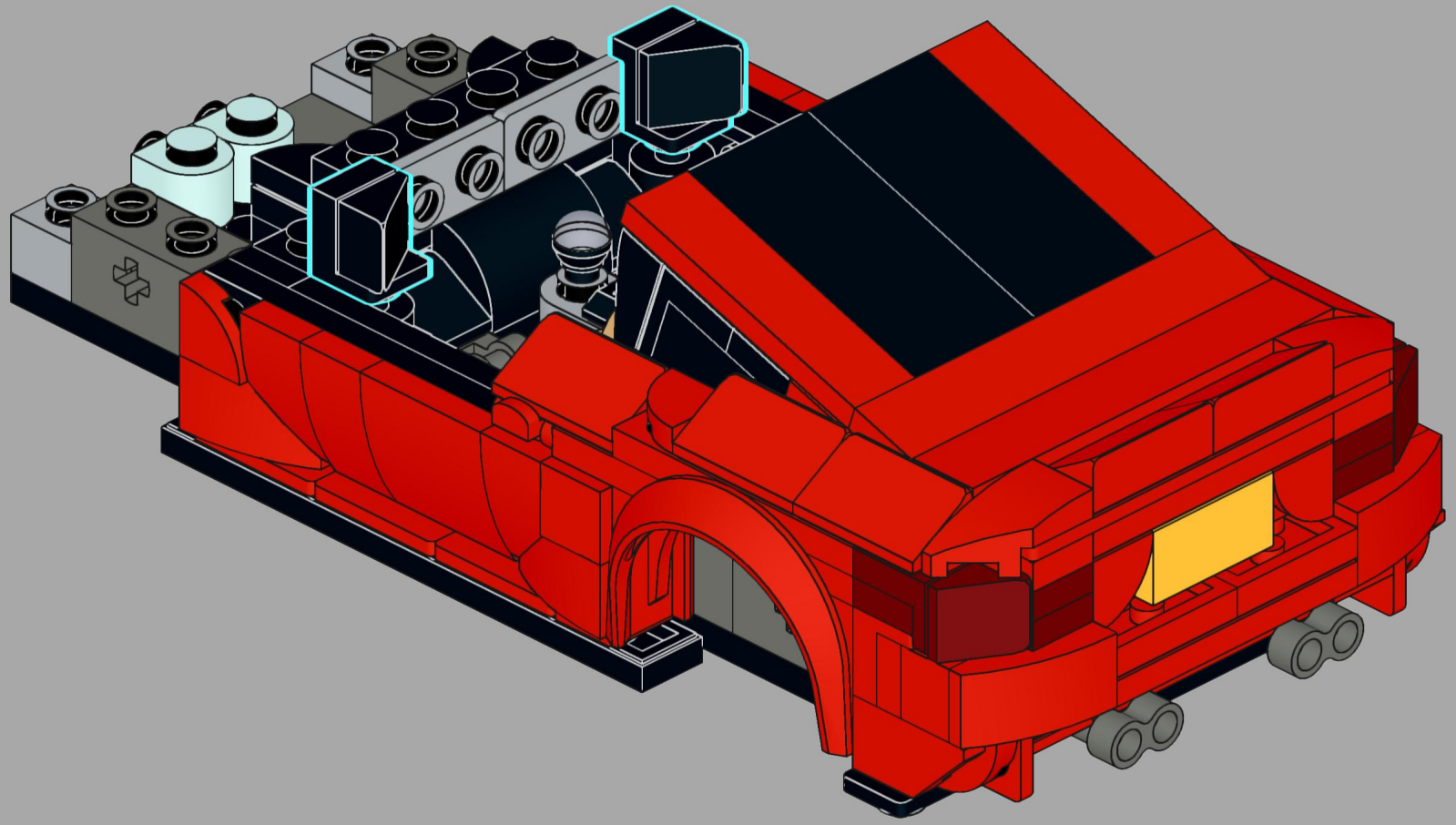

81

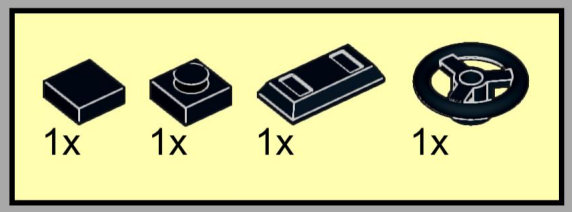

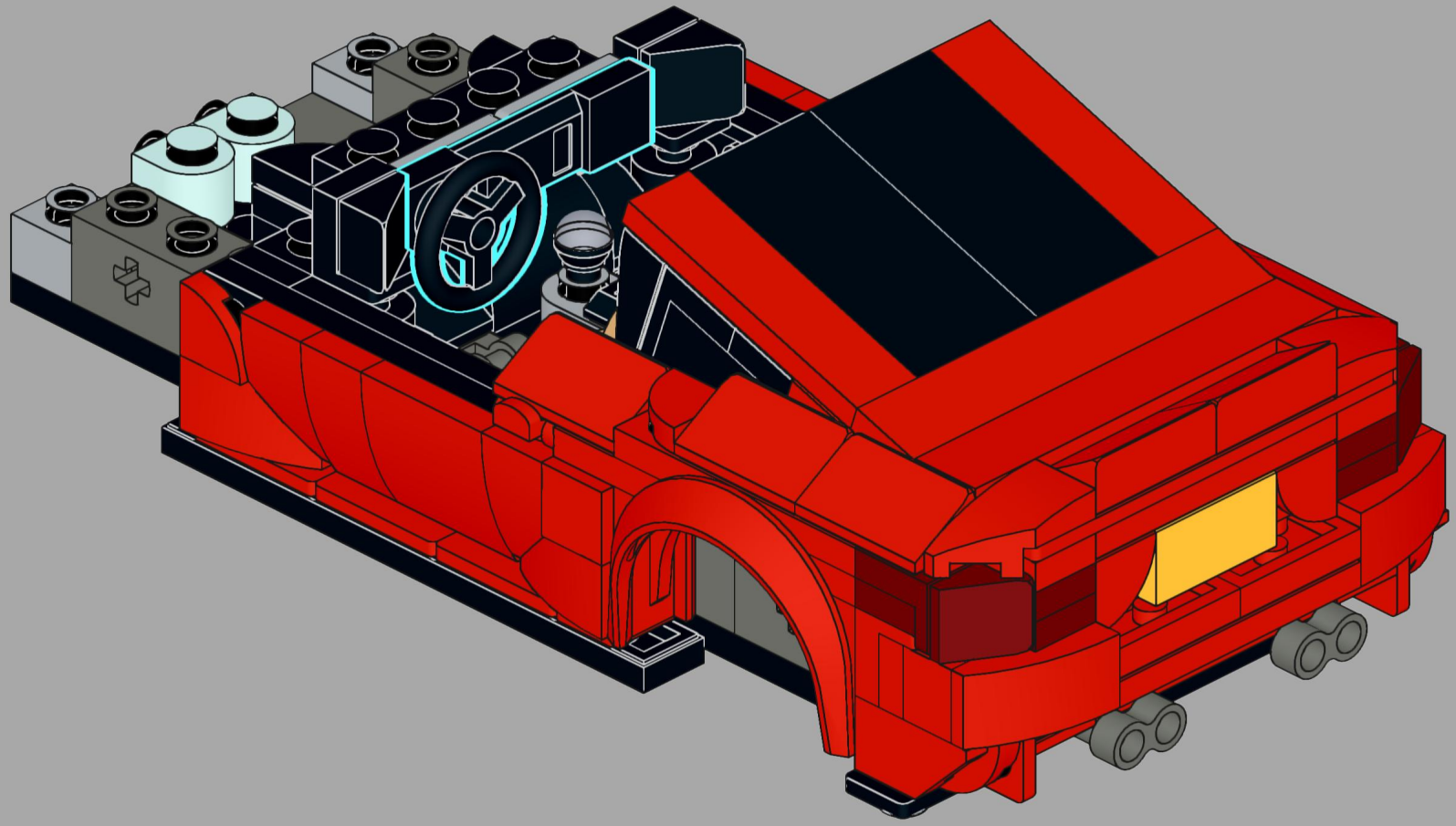

82

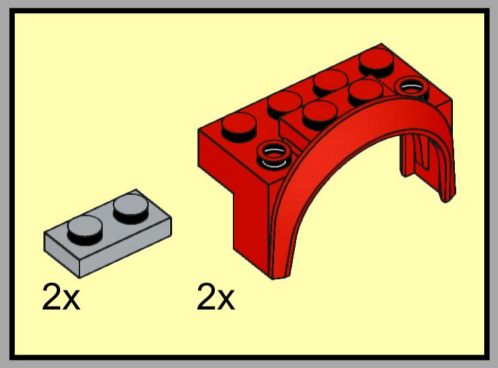

83

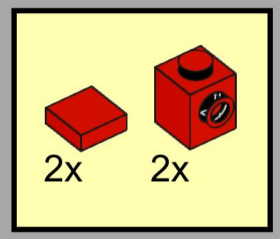

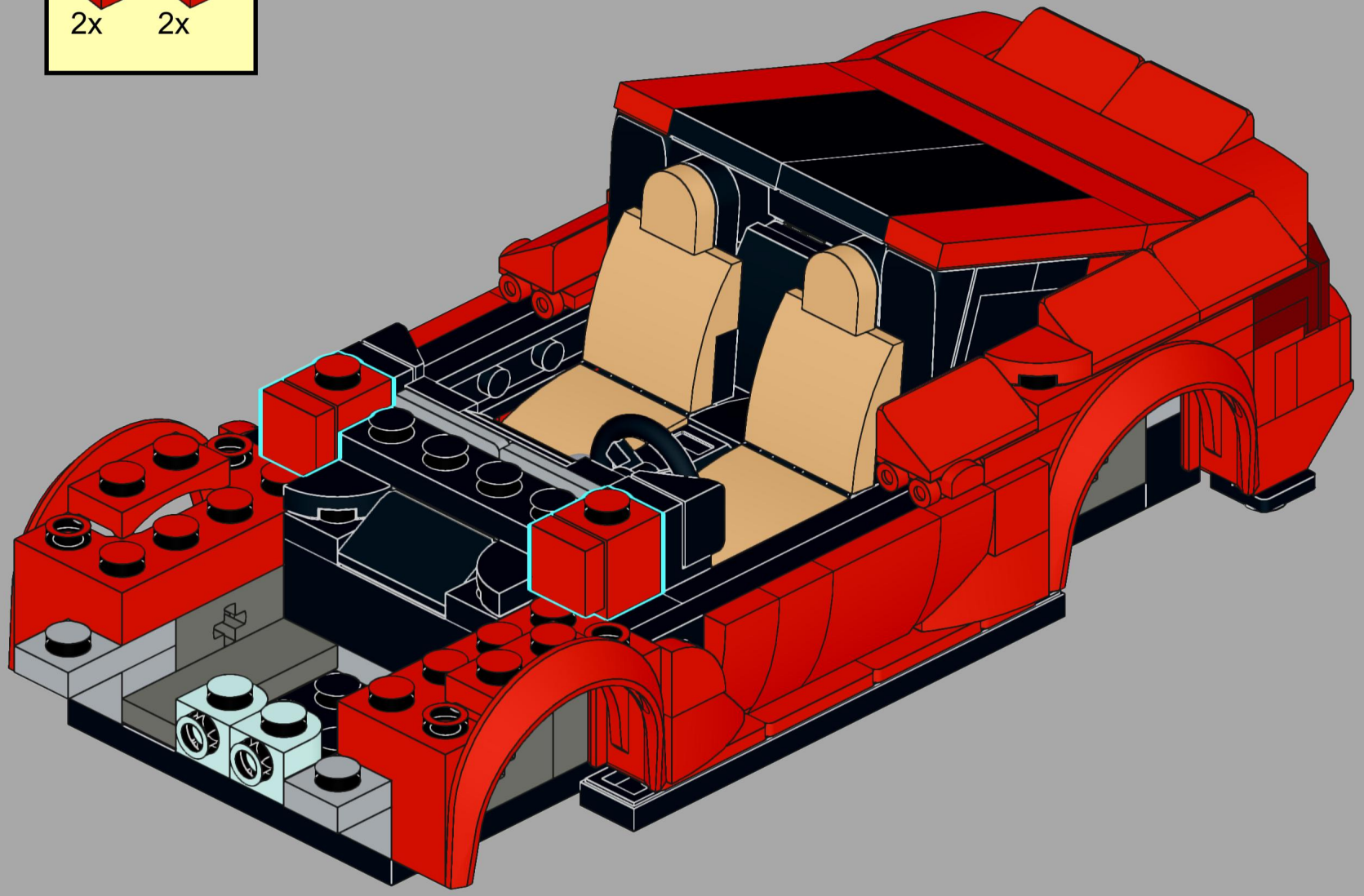

84

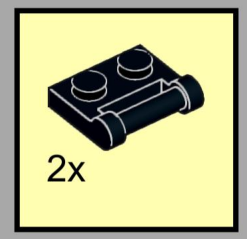

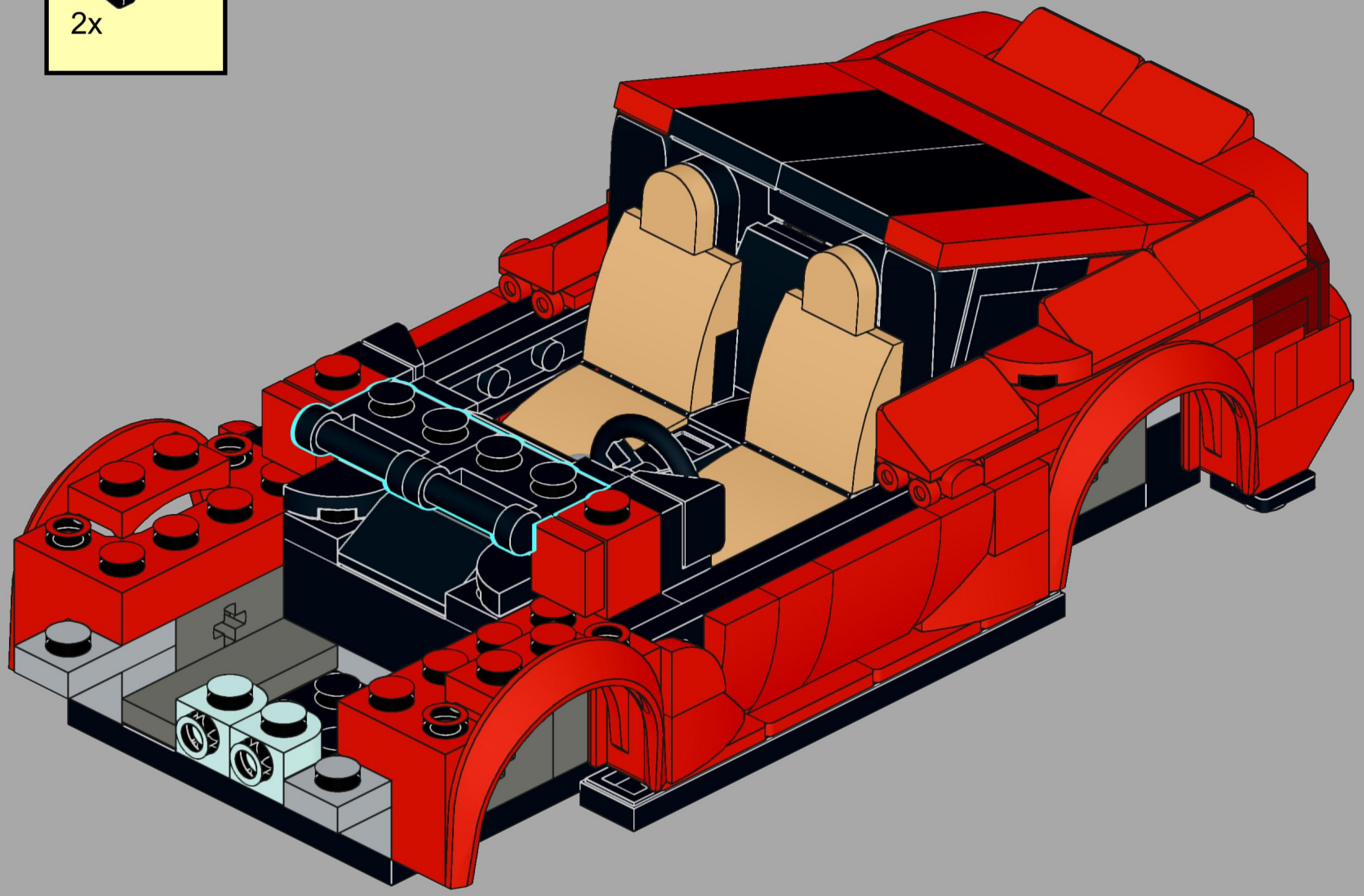

85

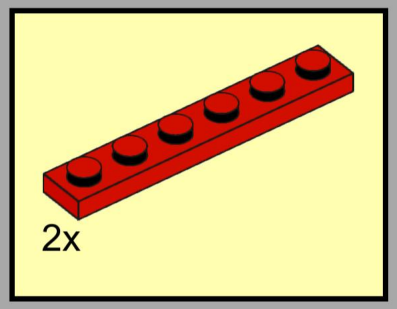

86

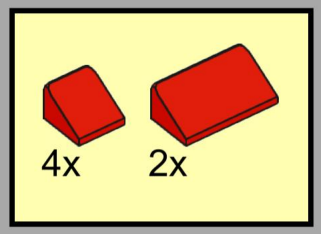

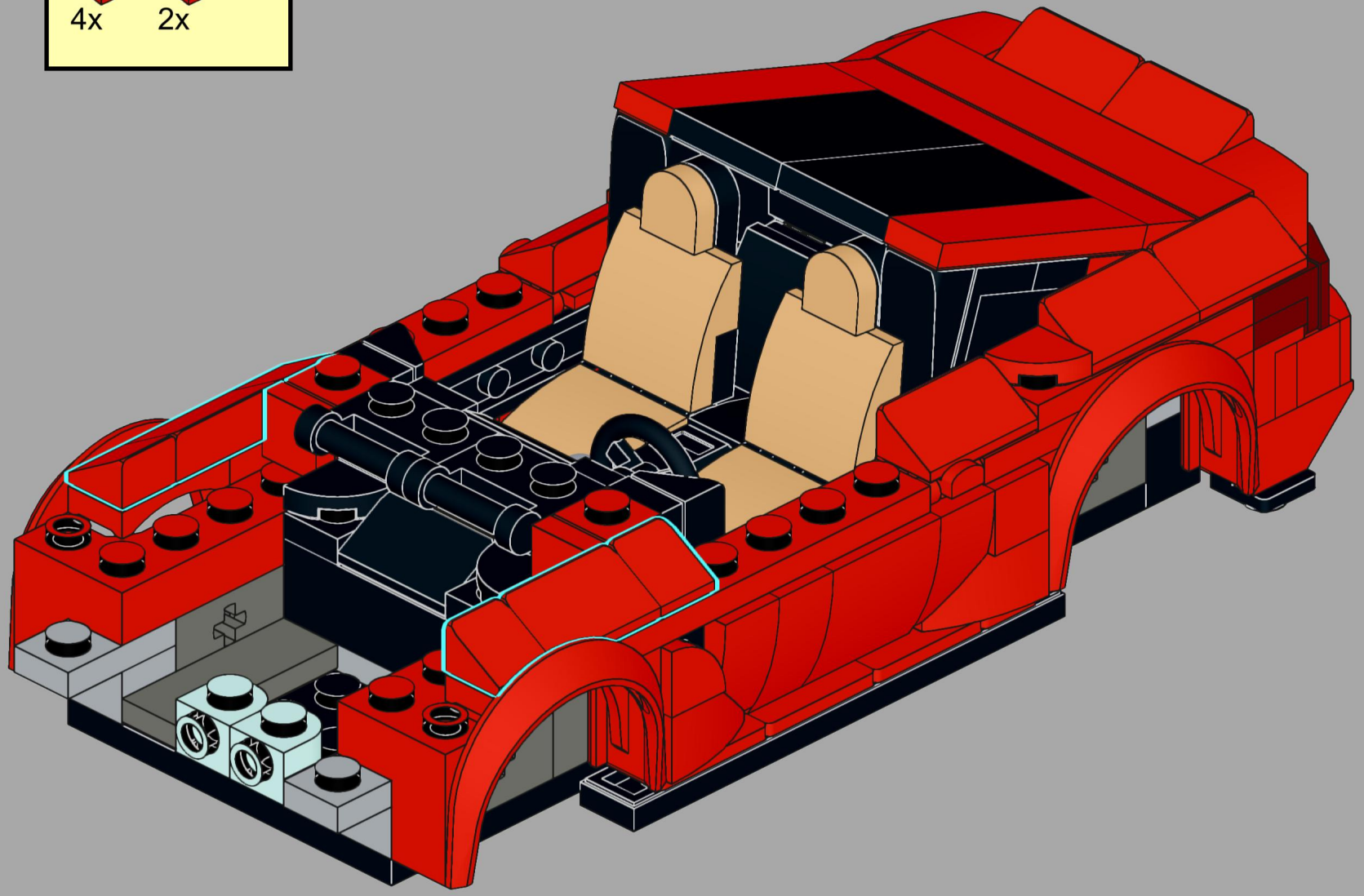

87

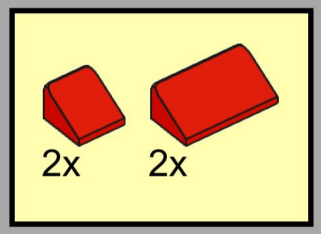

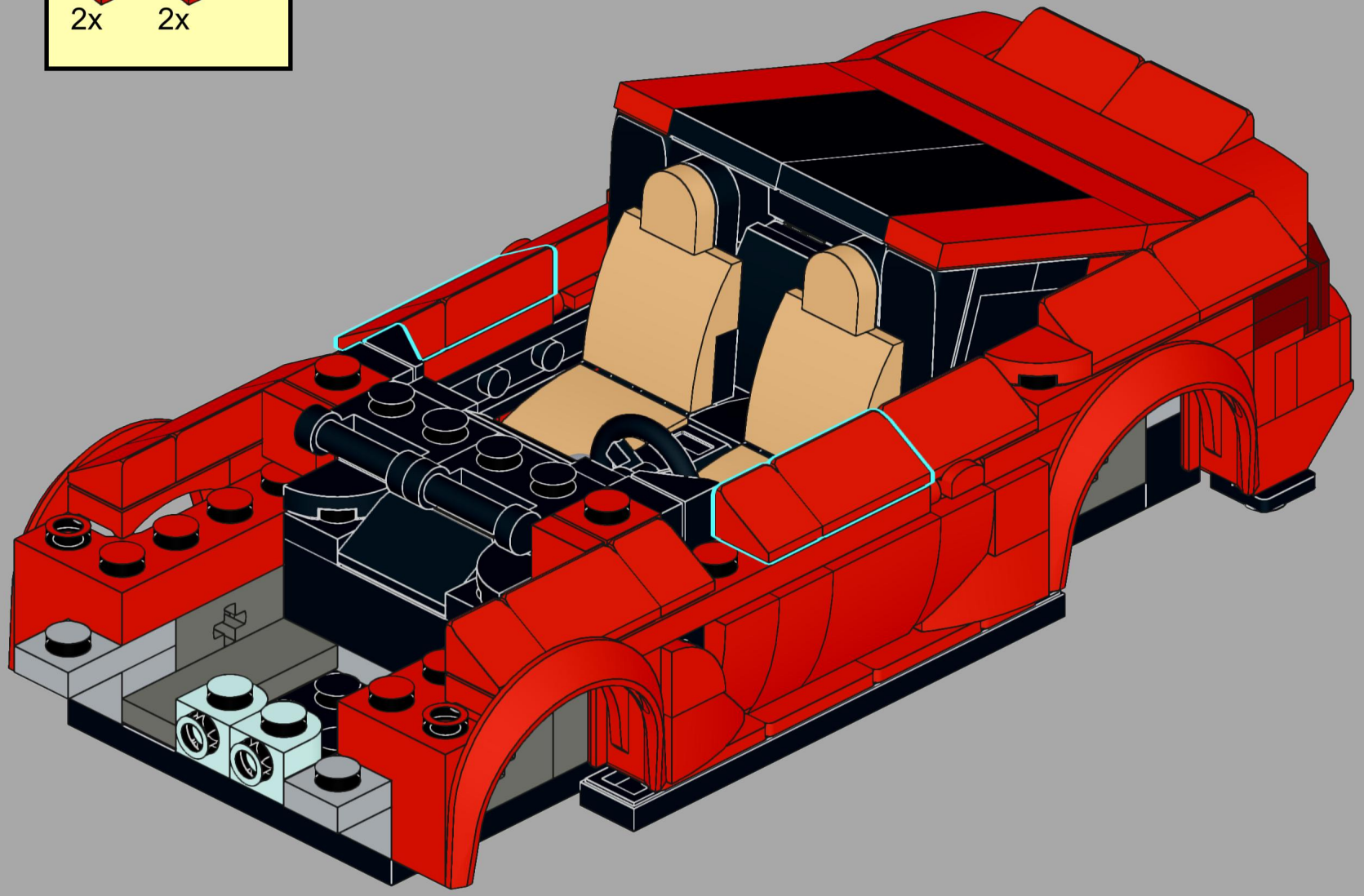

88

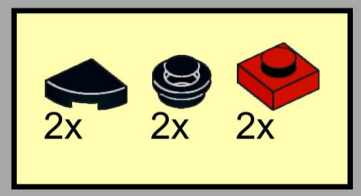

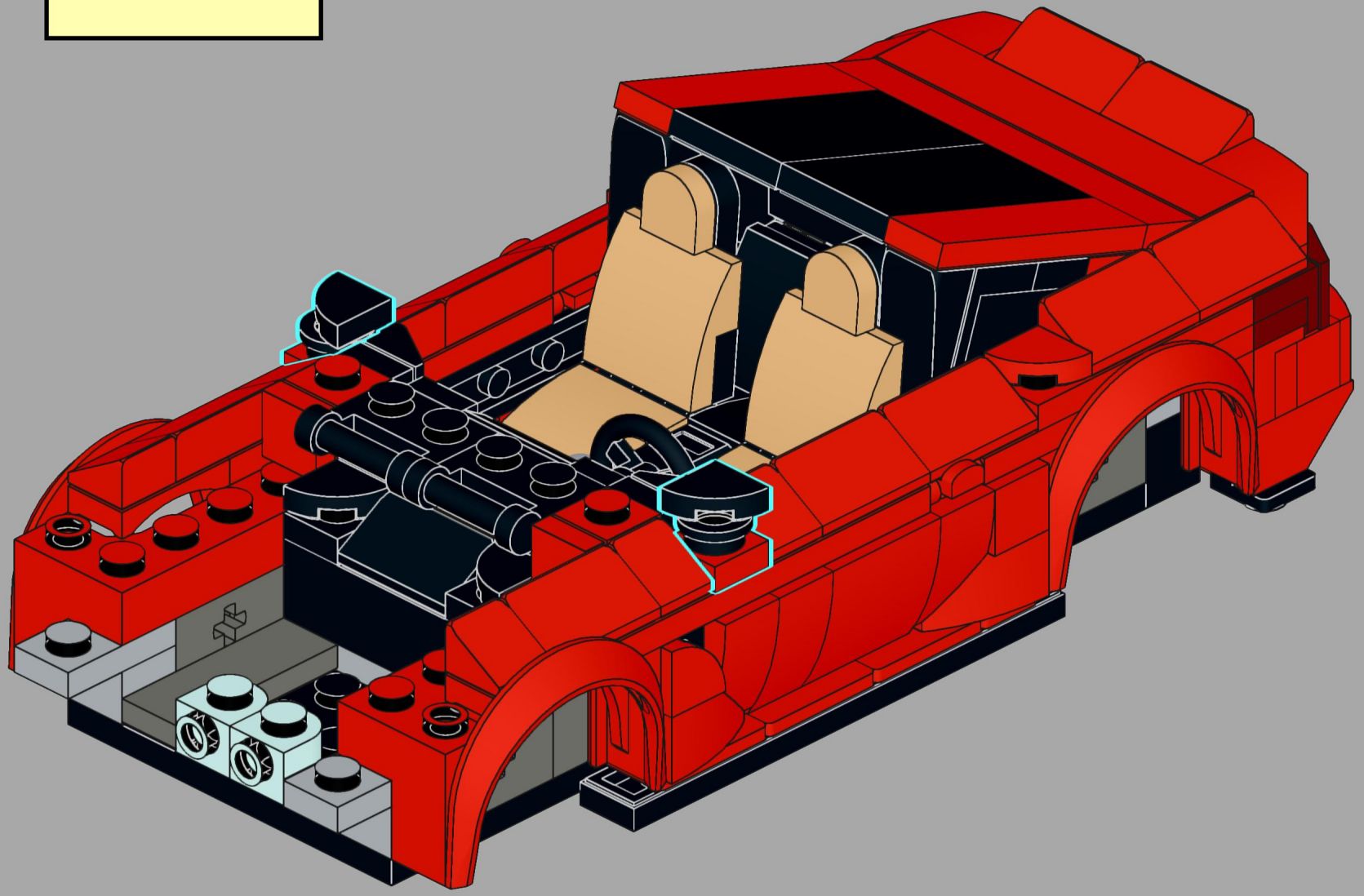

89

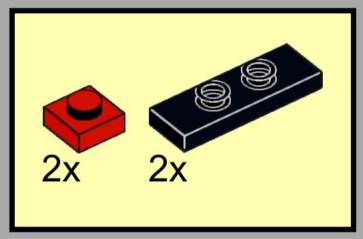

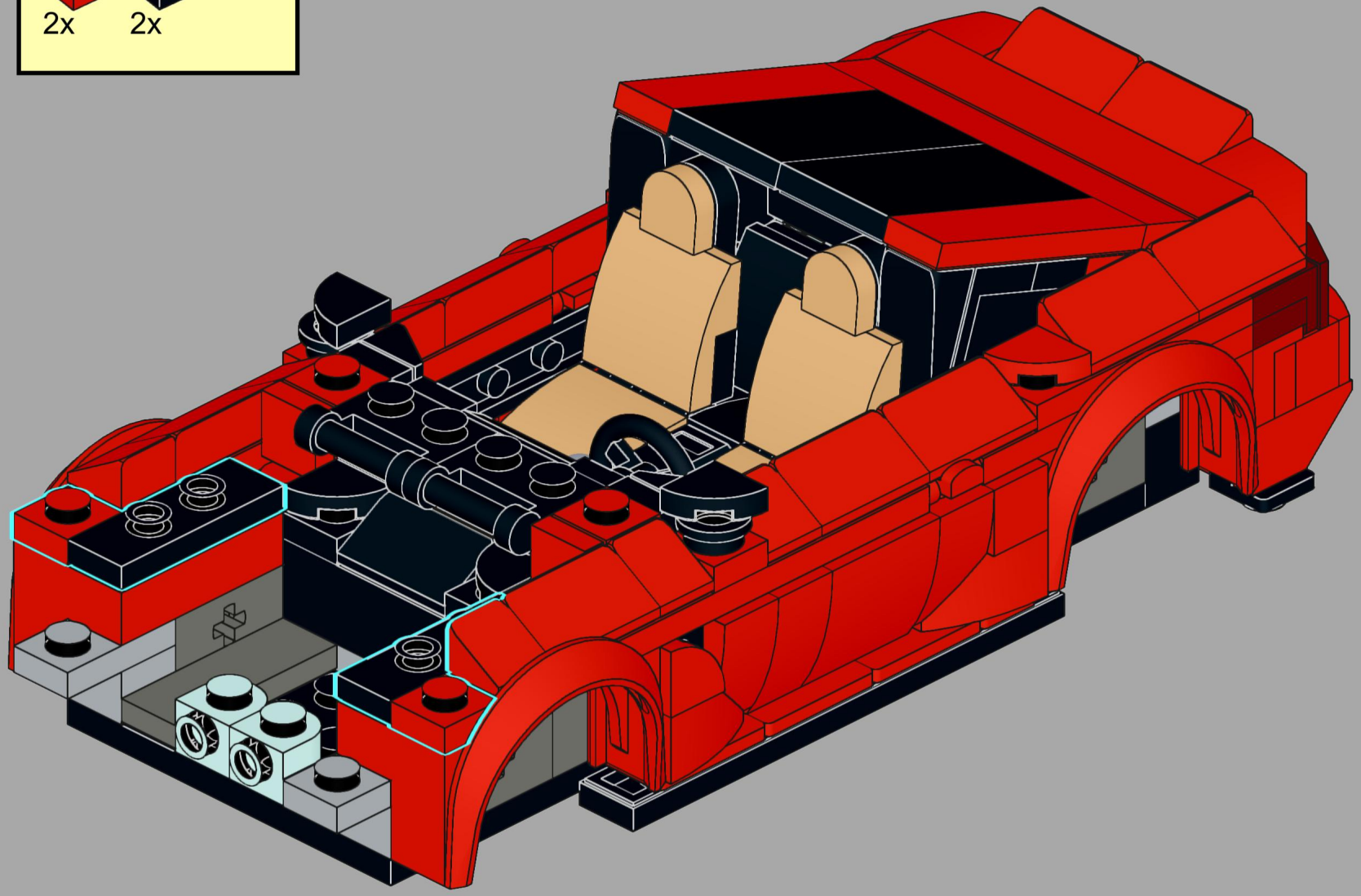

90

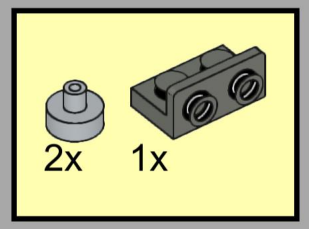

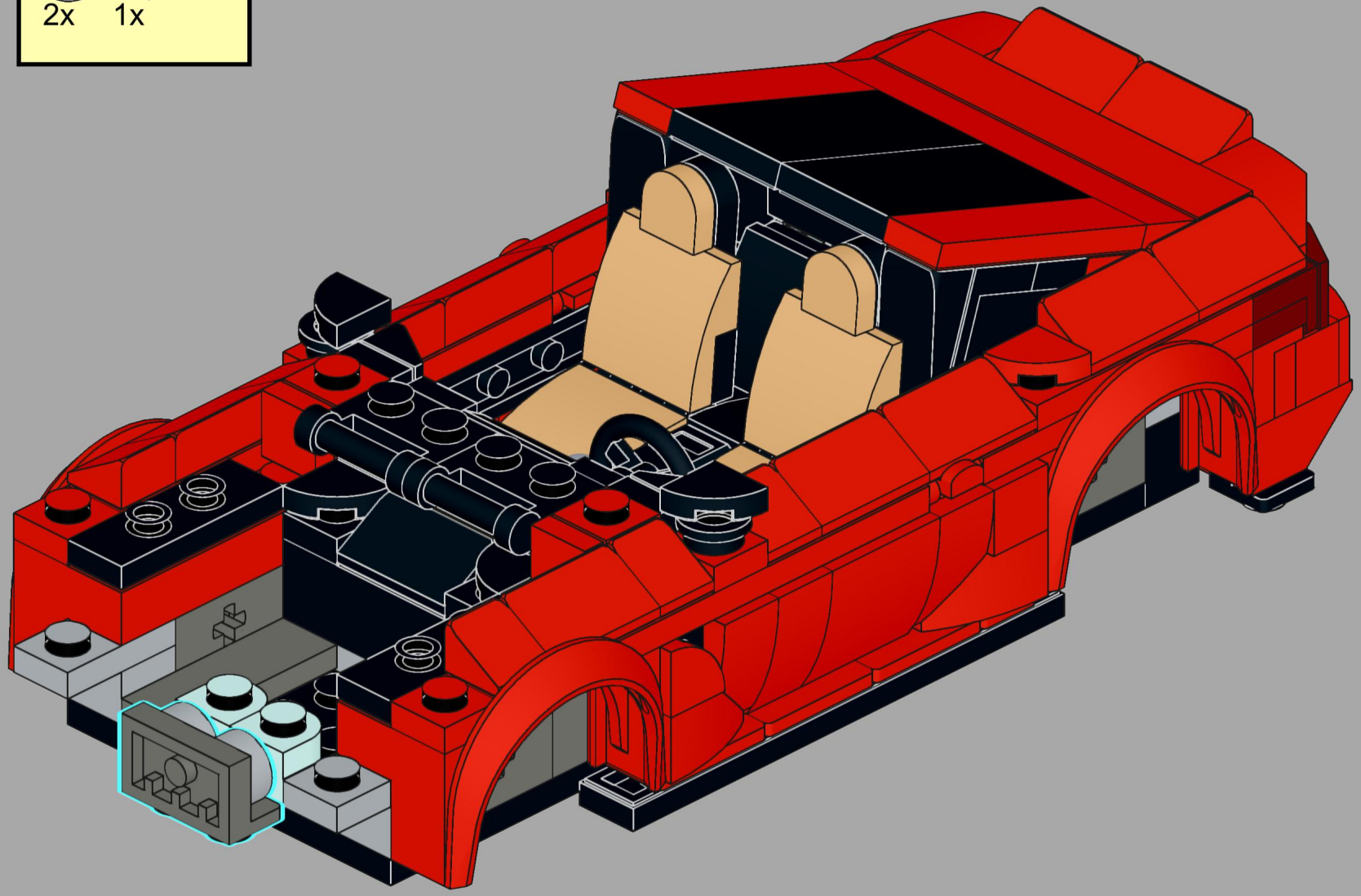

91

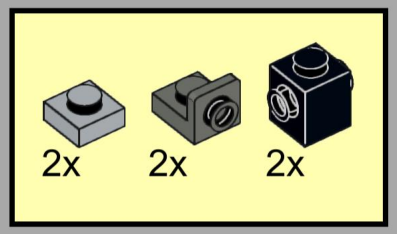

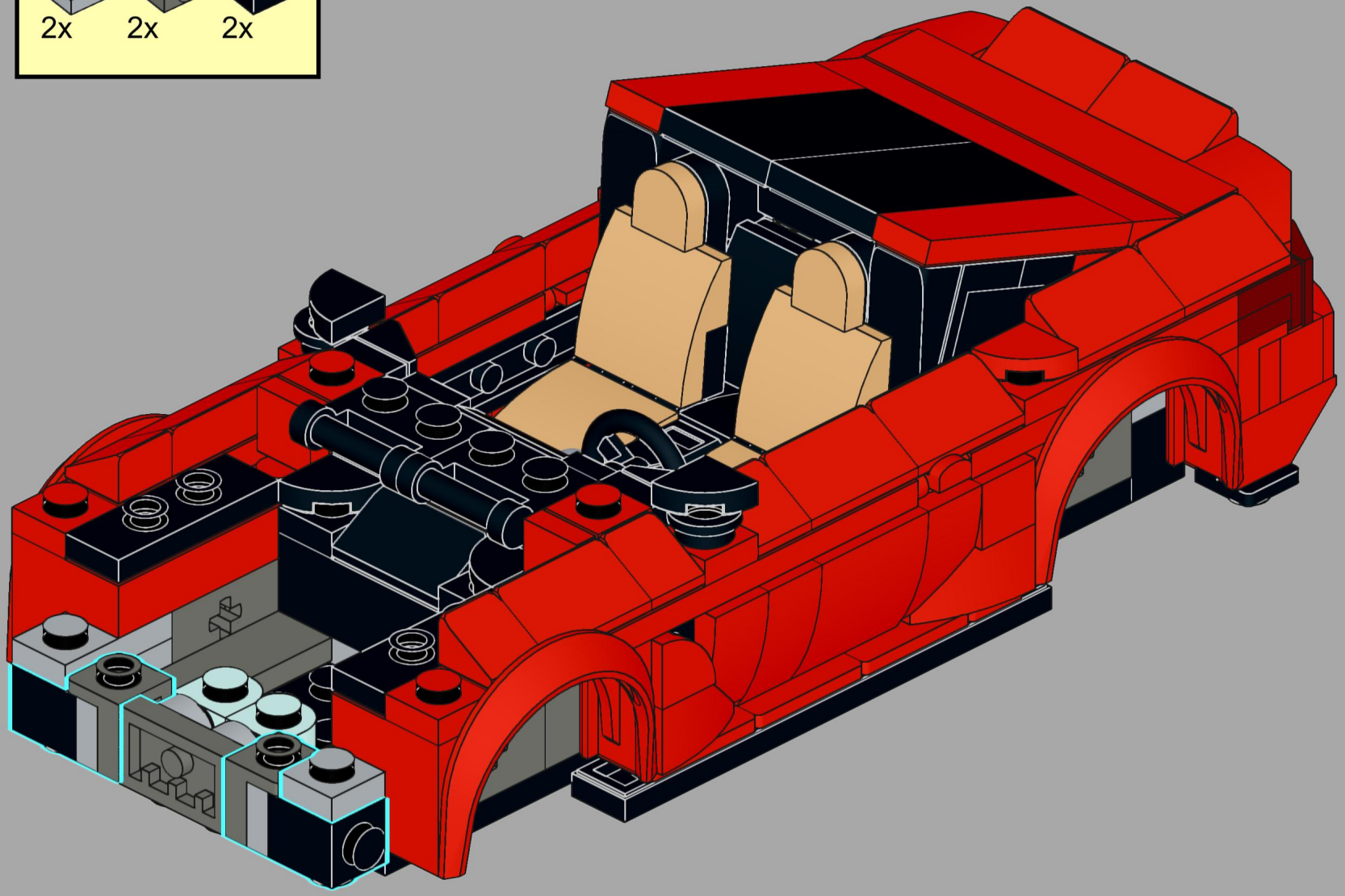

92

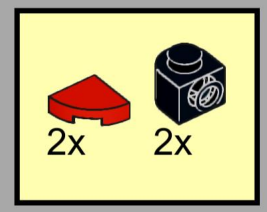

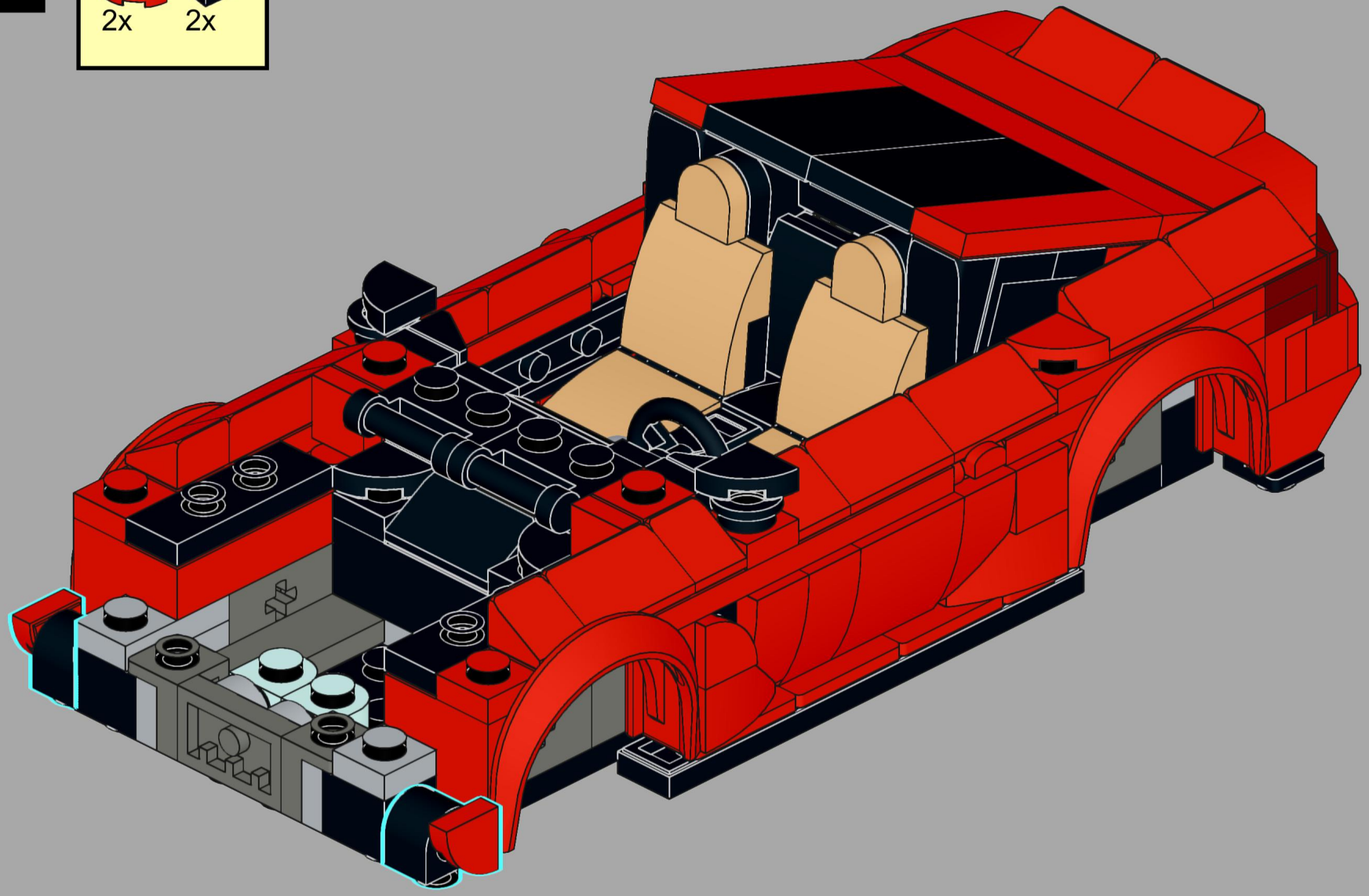

93

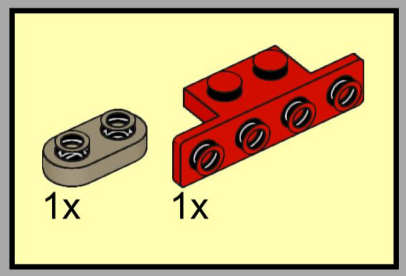

94

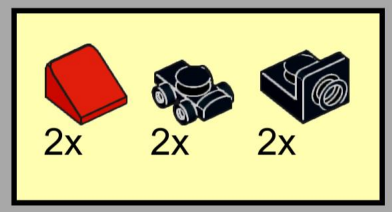

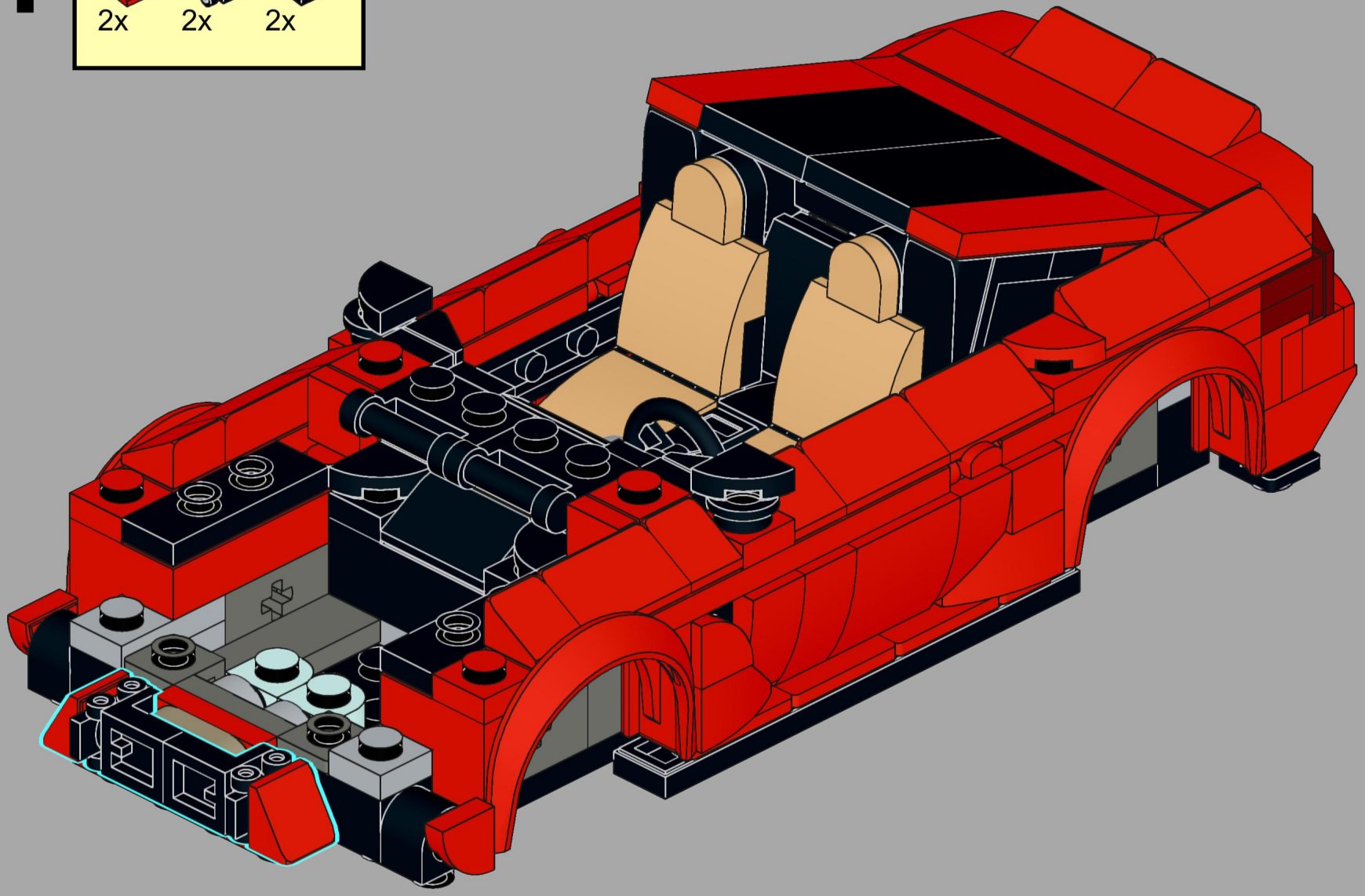

95

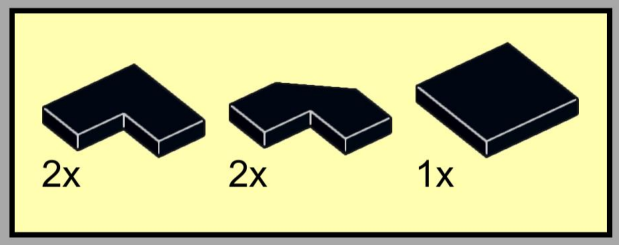

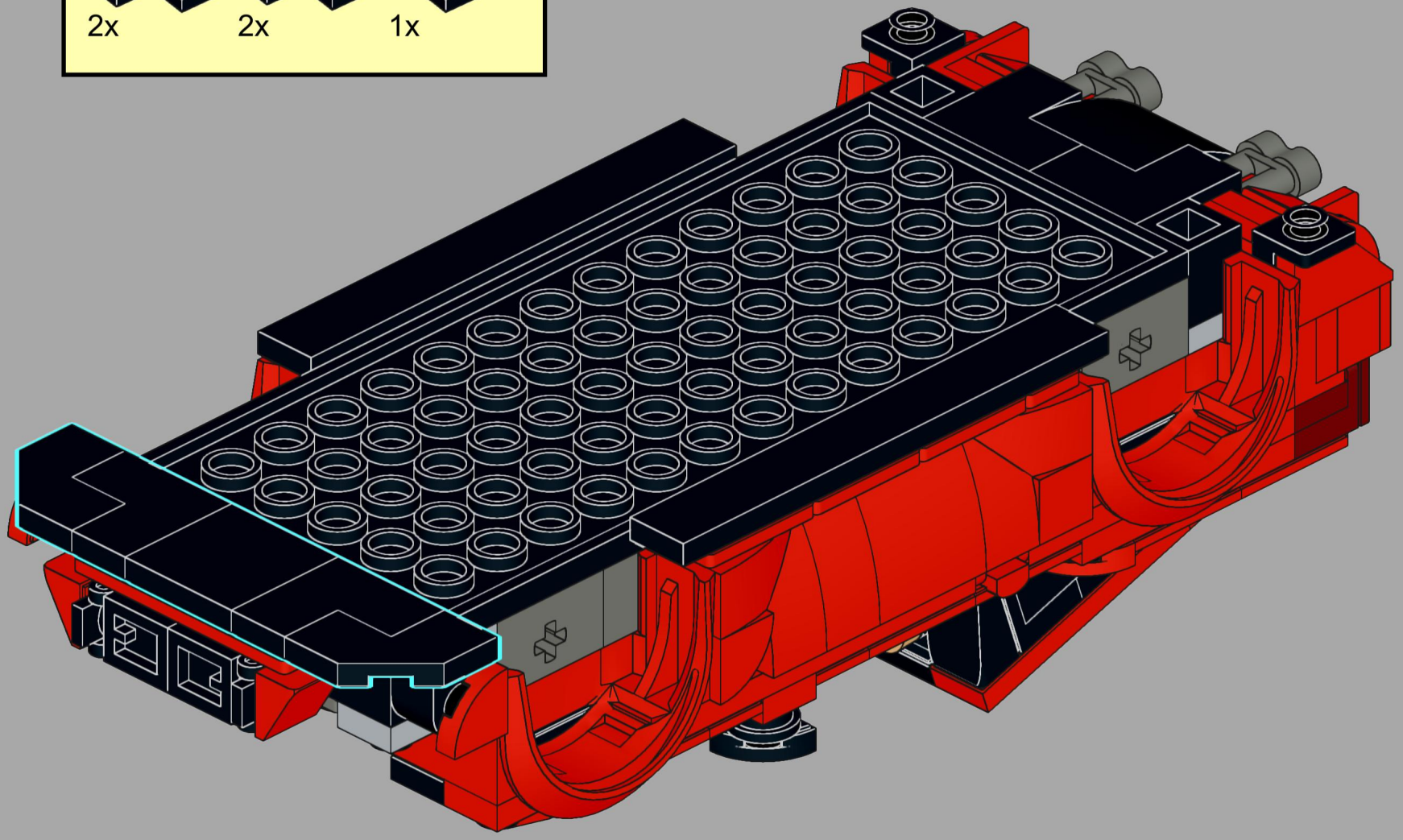

96

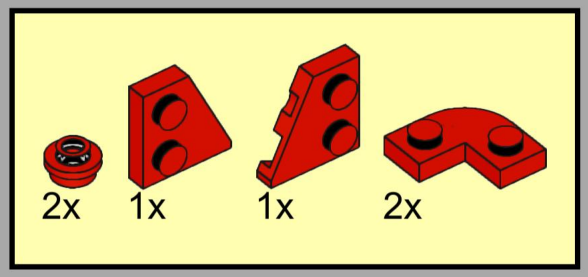

97

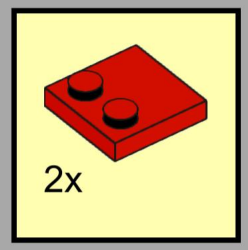

98

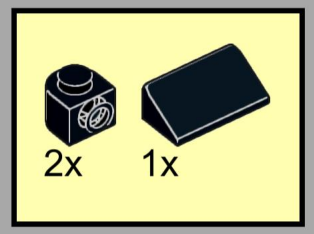

99

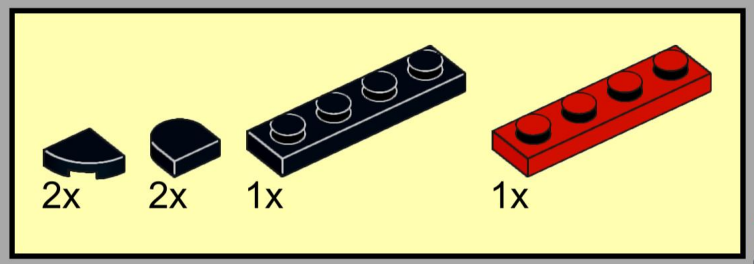

100

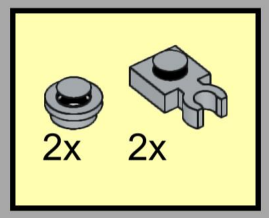

101

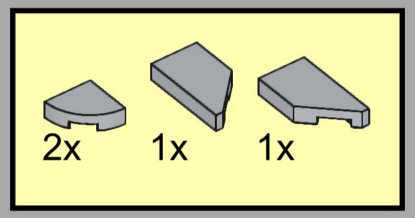

102

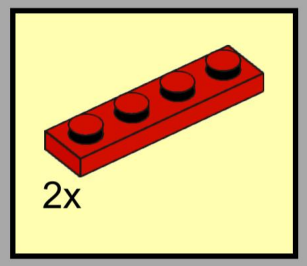

103

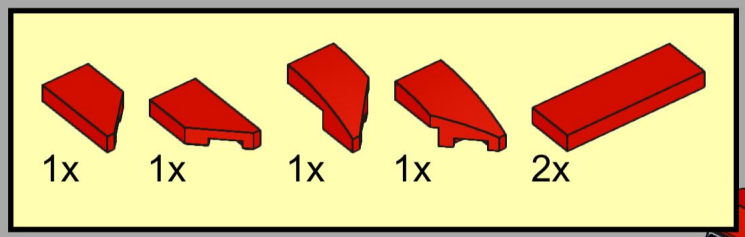

104

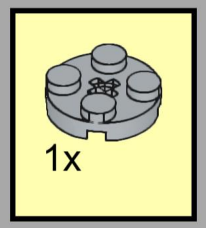

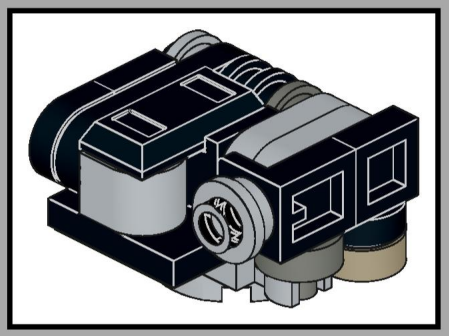

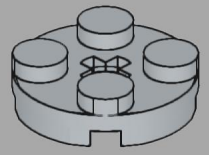

105

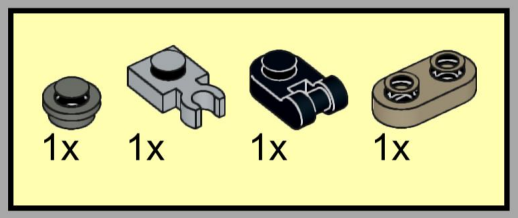

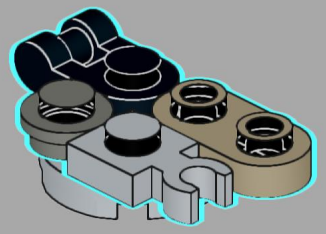

106

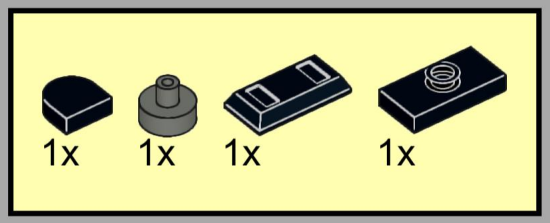

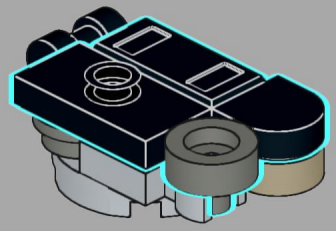

107

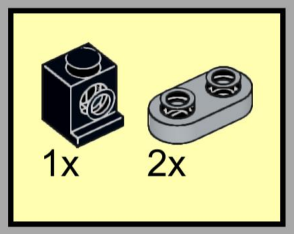

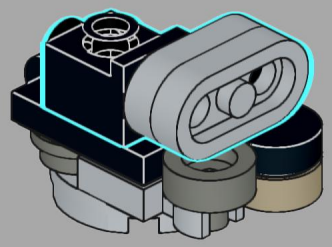

108

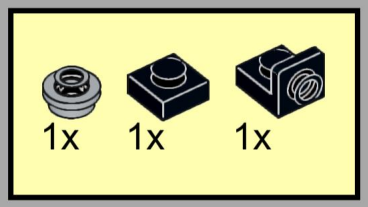

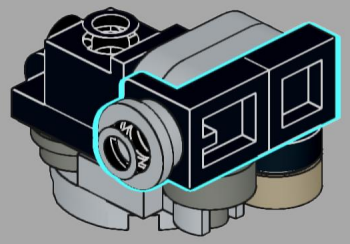

109

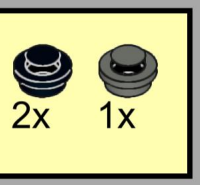

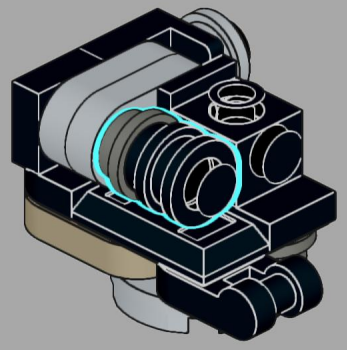

110

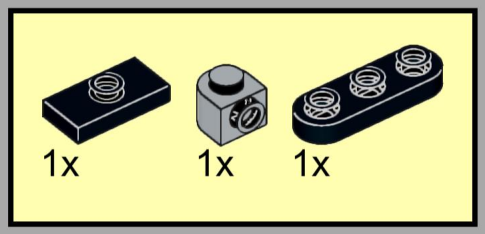

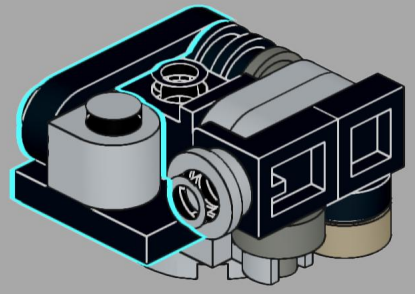

111

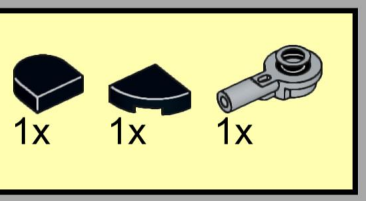

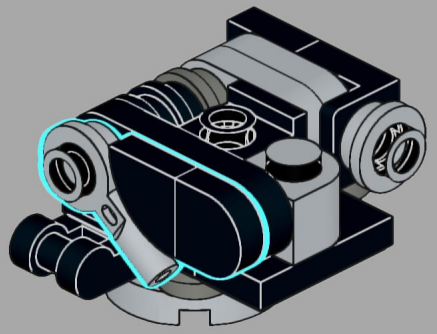

112

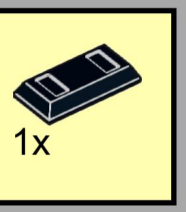

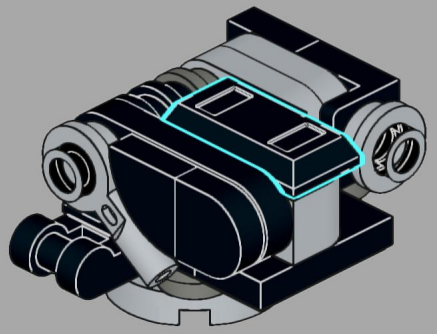

113

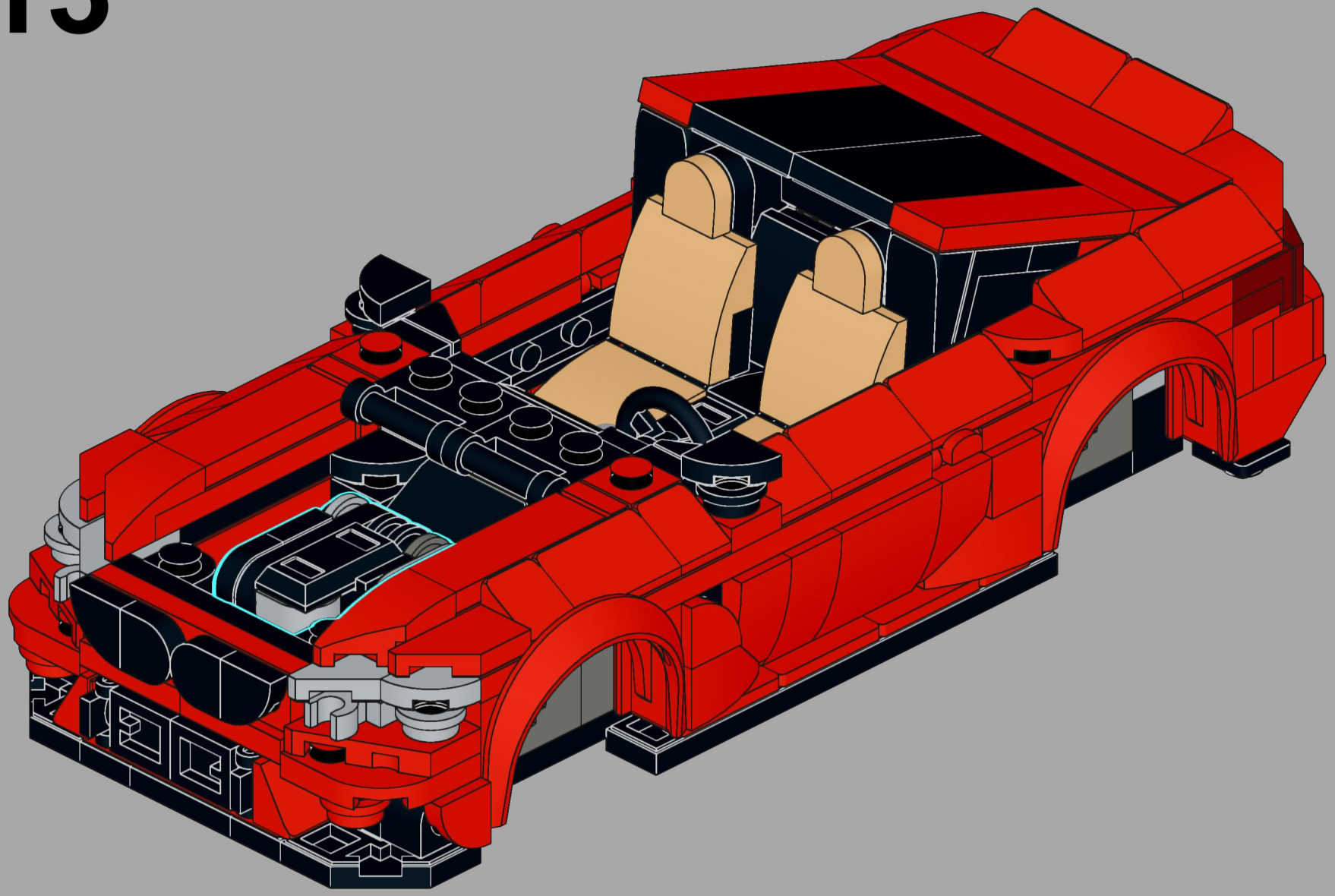

114

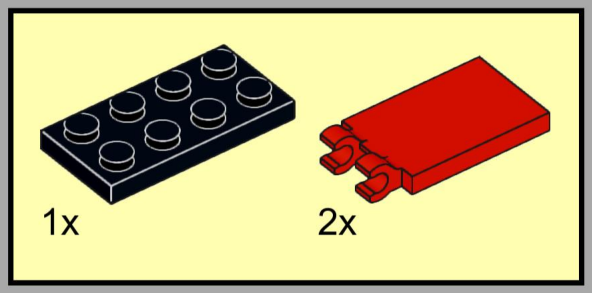

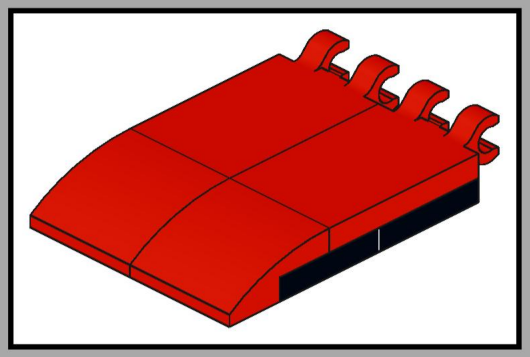

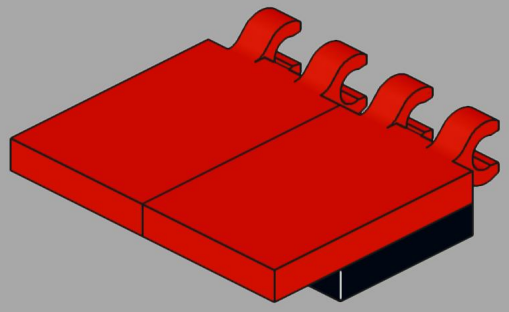

115

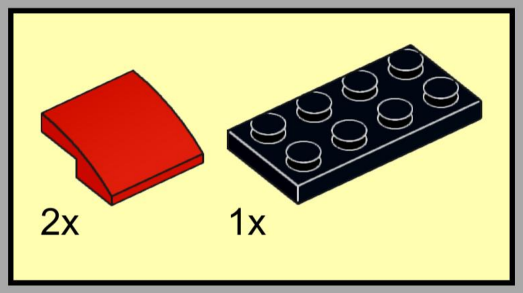

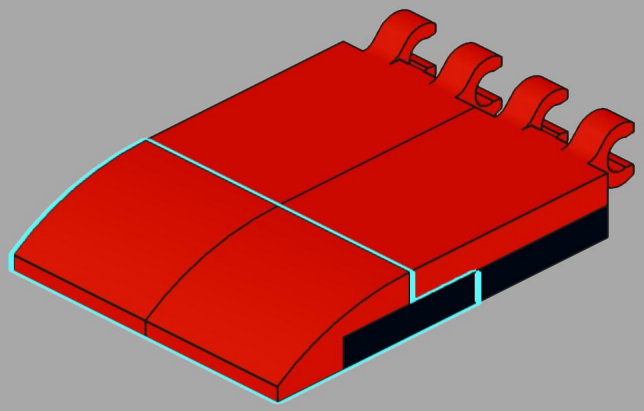

116

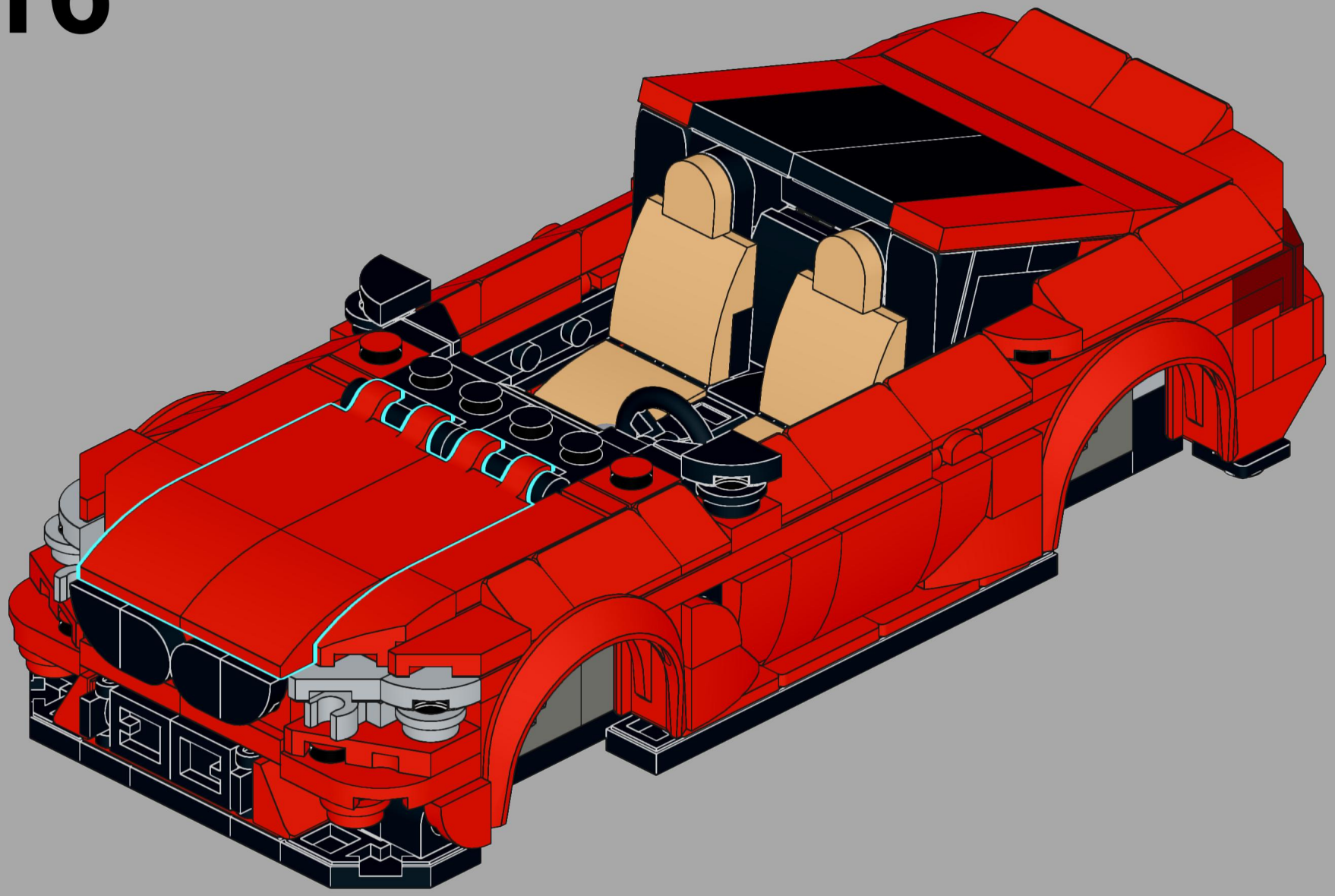

117

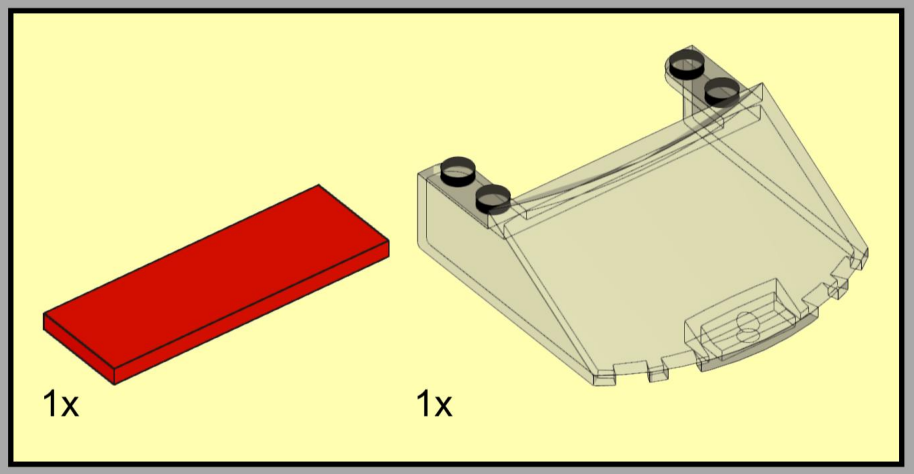

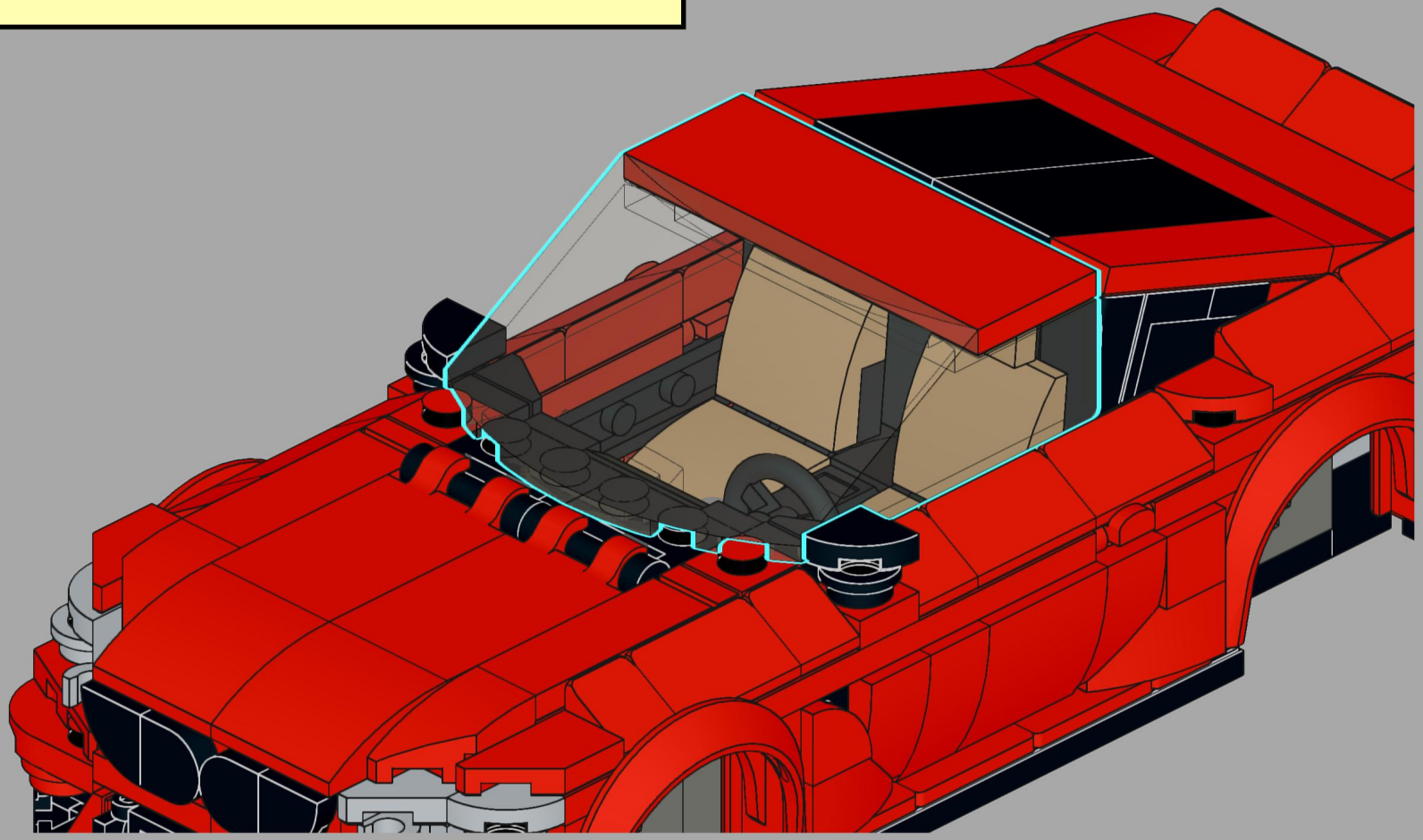

118

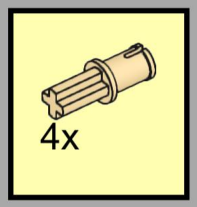

119

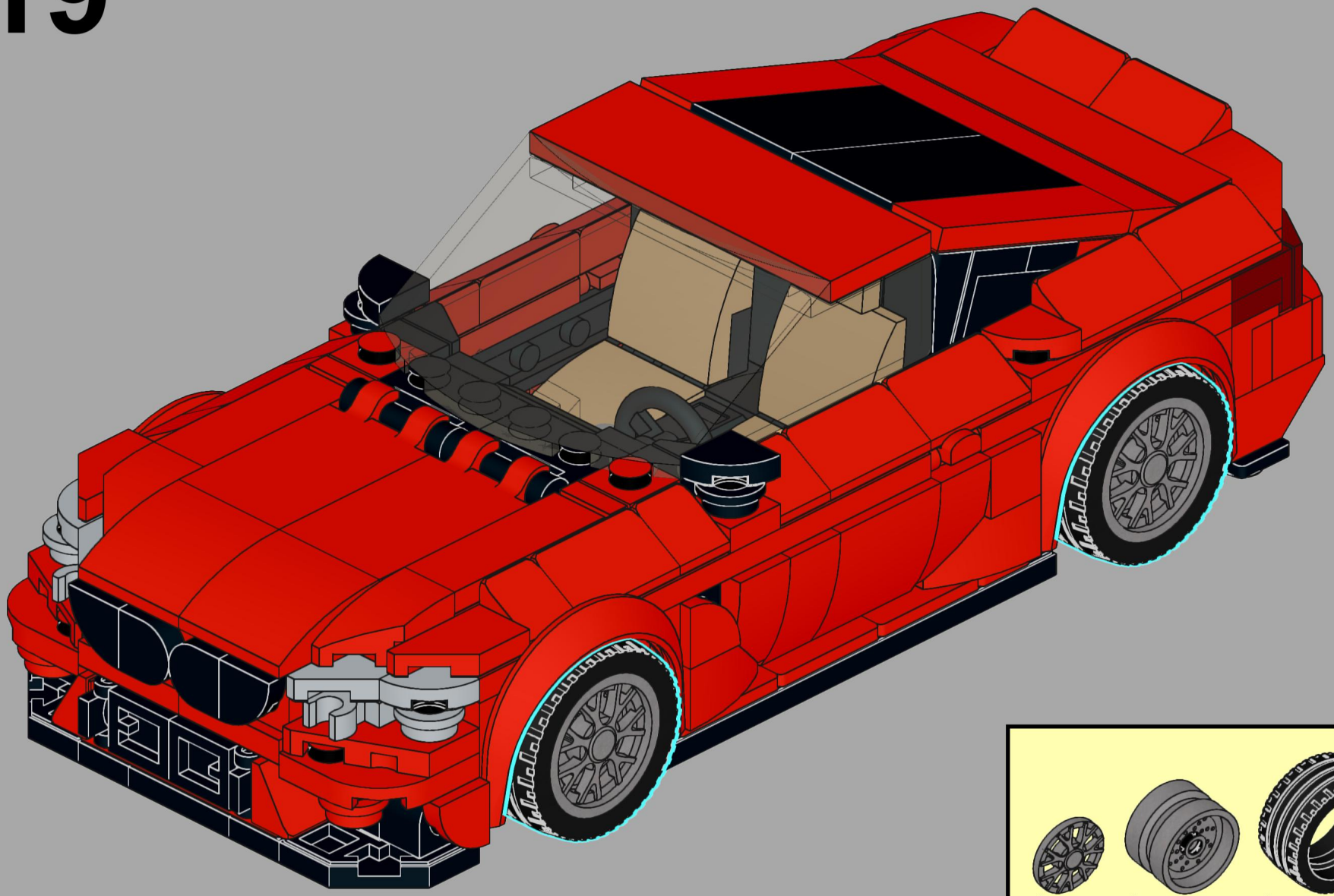

120


6x
24246
Black


8x
54200
Black


1x
4070
Black

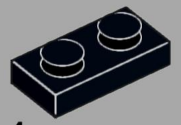
4x
3023
Black

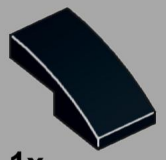
1x
11477
Black


2x
32952
Black

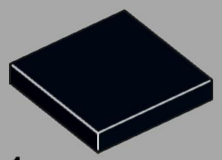
1x
3068
Black


1x
30663
Black

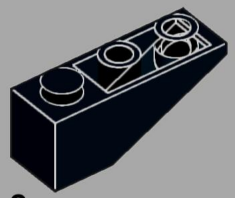
2x
4287
Black

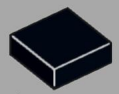
1x
3070
Black


4x
3386
Black


4x
87087
Black


4x
35480
Black

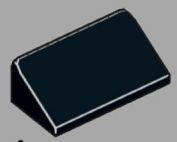
4x
85984
Black

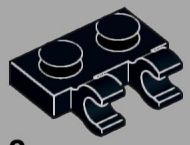
2x
60470b
Black

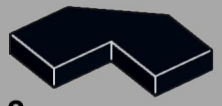
2x
27263
Black

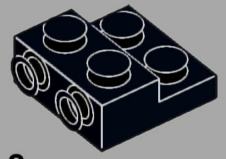
2x
99206
Black

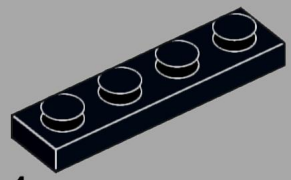
4x
3710
Black


1x
90370pb05
Black


1x
26047
Black

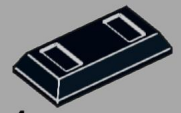
4x
99563
Black

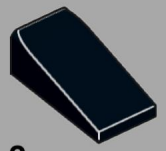
2x
5404
Black

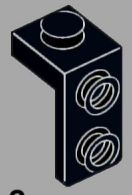
2x
79389
Black

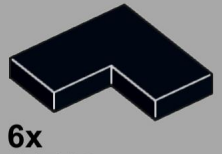
6x
14719
Black

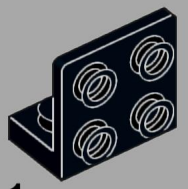
1x
99207
Black

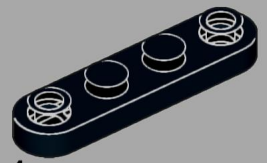
1x
77845
Black


2x
11253
Black

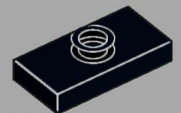
5x
15573
Black

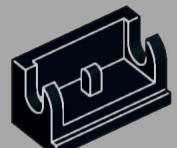
2x
3937
Black

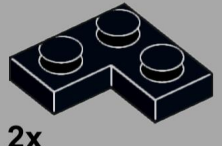
2x
2420
Black

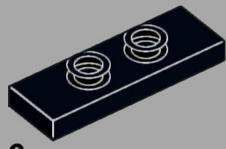
6x
34103
Black

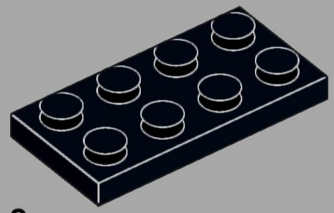
2x
3020
Black


7x
36840
Black

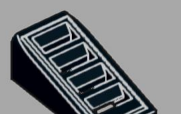
2x
61409
Black

4x
48336
Black

2x
20482
Black

4x
3069
Black

1x
37352
Black

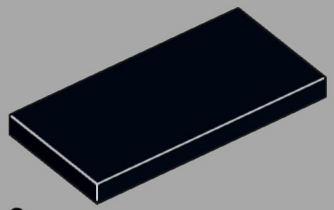

2x
87079
Black

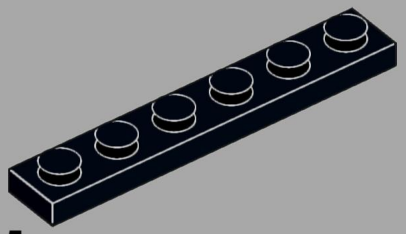

5x
3666
Black

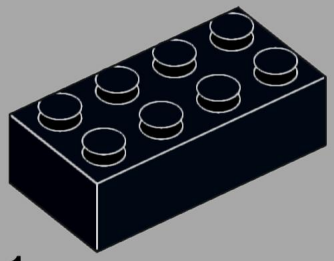

1x
3001
Black

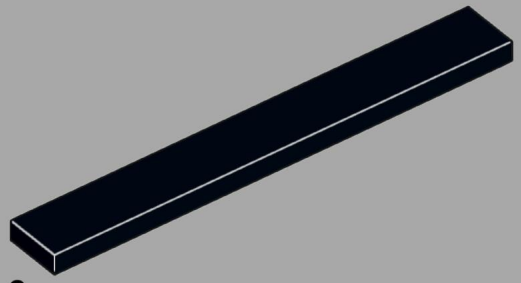

2x
4162
Black

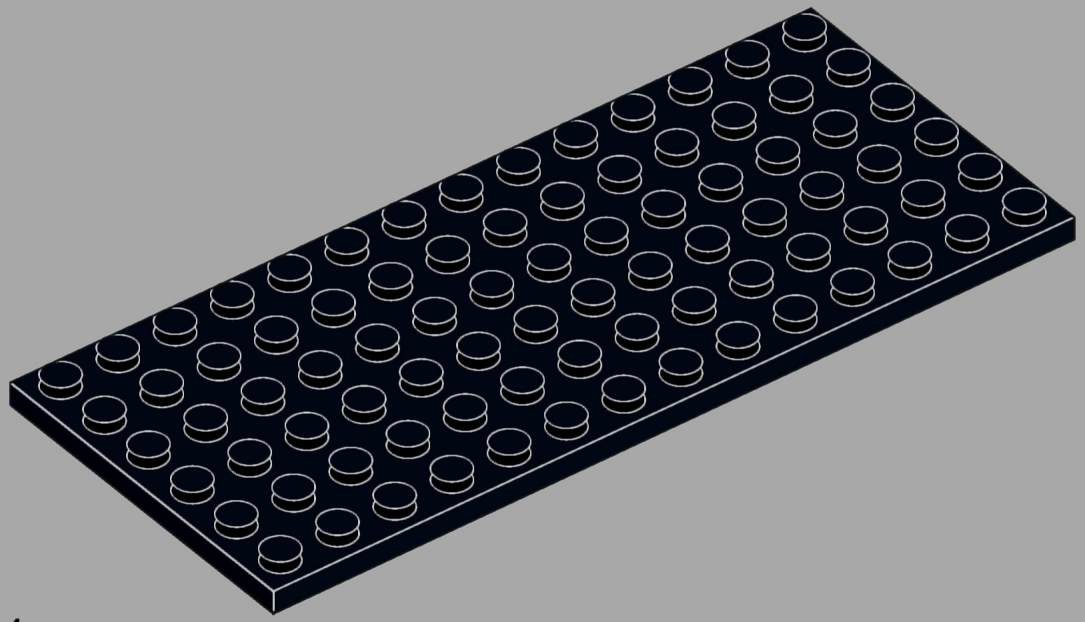

1x
3456
Black



2x
4073
Dark Bluish Gray



1x
20482
Dark Bluish Gray

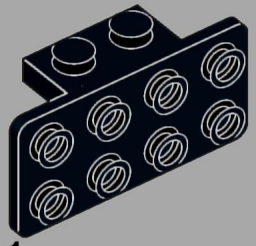

1x
93274
Black



2x
30162
Dark Bluish Gray

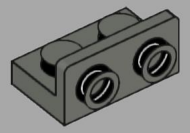

1x
99780
Dark Bluish Gray



2x
25269
Light Bluish Gray

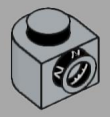

1x
3386
Light Bluish Gray

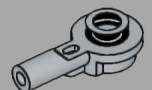

1x
32828
Light Bluish Gray

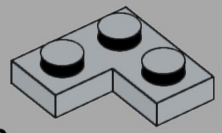

2x
2420
Light Bluish Gray



2x
54200
Dark Red



10x
54200
Red

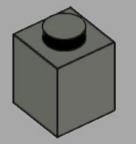

4x
3005
Dark Bluish Gray

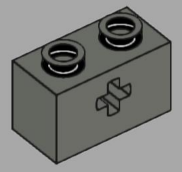

4x
32064
Dark Bluish Gray



7x
85861
Light Bluish Gray

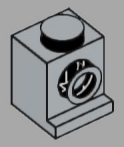

4x
4070
Light Bluish Gray



3x
3023
Light Bluish Gray

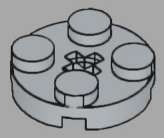

1x
4032
Light Bluish Gray



2x
36841
Dark Red



2x
86996
Red

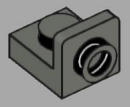

2x
36840
Dark Bluish Gray

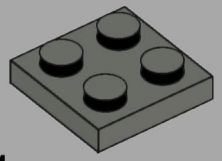

1x
3022
Dark Bluish Gray



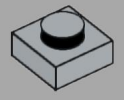

4x
3024
Light Bluish Gray

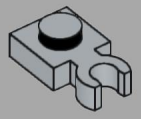

3x
4085d
Light Bluish Gray

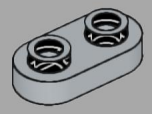

3x
35480
Light Bluish Gray

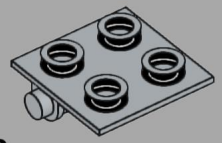

2x
6134
Light Bluish Gray



10x
25269
Red



2x
11253
Red

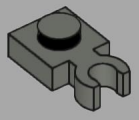

2x
4085d
Dark Bluish Gray

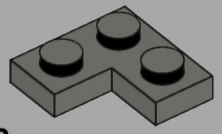

2x
2420
Dark Bluish Gray

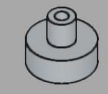



2x
20482
Light Bluish Gray

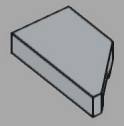

1x
5091
Light Bluish Gray

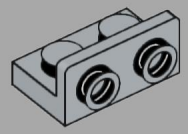

2x
99780
Light Bluish Gray

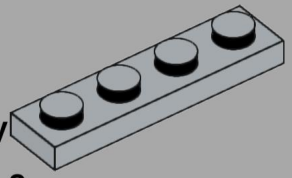

2x
3710
Light Bluish Gray



4x
3070
Red



4x
36840
Red

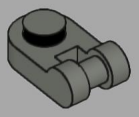

1x
26047
Dark Bluish Gray

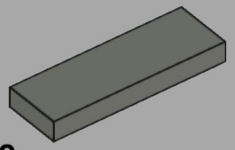

2x
63864
Dark Bluish Gray

2x
86996
Light Bluish Gray

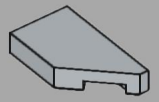

1x
5092
Light Bluish Gray

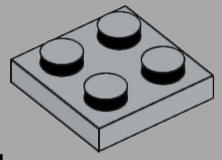

1x
3022
Light Bluish Gray

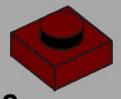

8x
3024
Dark Red

8x
3024
Red

2x
5091
Red

2x
85861
Red

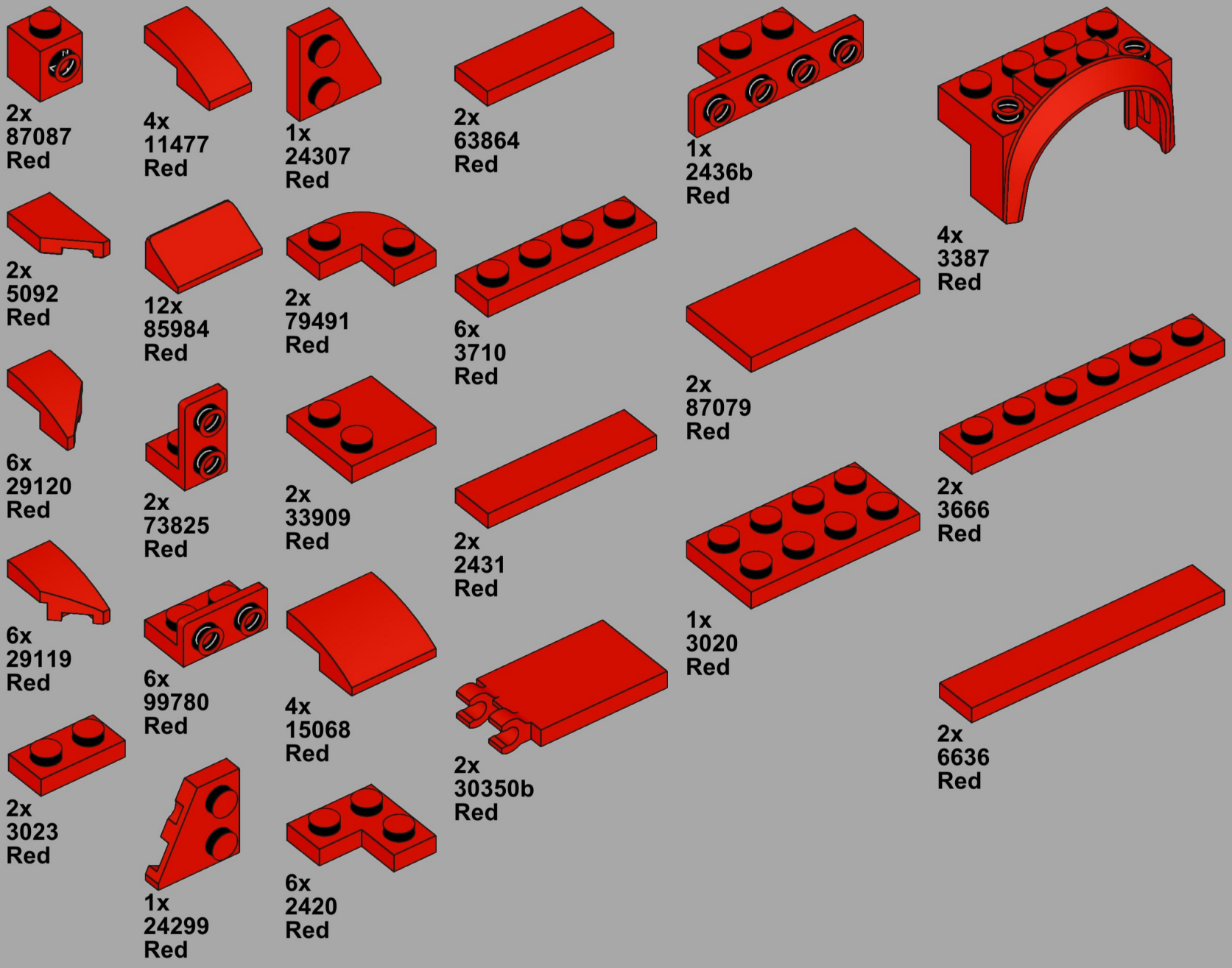
2x
87087
Red
4x
11477
Red
1x
24307
Red
2x
63864
Red
1x
2436b
Red
4x
3387
Red
2x
5092
Red
12x
85984
Red
2x
79491
Red
6x
3710
Red
2x
87079
Red
6x
29120
Red
2x
73825
Red
2x
33909
Red
2x
2431
Red
2x
3666
Red
6x
29119
Red
6x
99780
Red
4x
15068
Red
2x
30350b
Red
1x
3020
Red
2x
3023
Red
1x
24299
Red
6x
2420
Red
2x
6636
Red

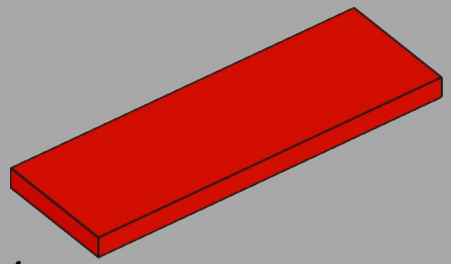

1x
69729
Red

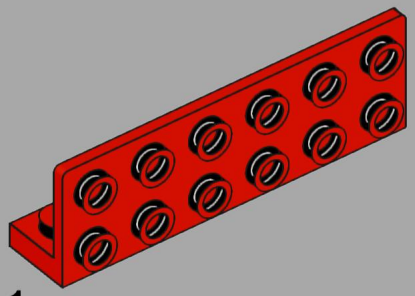

1x
5090
Red

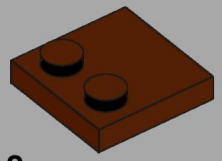

2x
33909
Reddish Brown

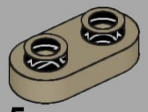

5x
35480
Dark Tan



2x
24246
Medium Tan

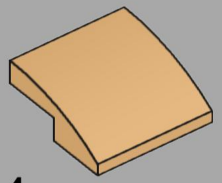

4x
15068
Medium Tan

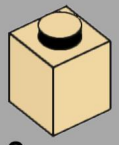

2x
3005
Tan

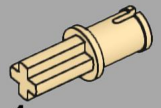

4x
3749
Tan

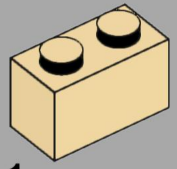

1x
3004
Tan

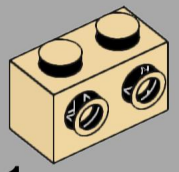

1x
11211
Tan

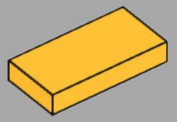

1x
3069
Bright Light Orange

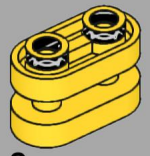

2x
77808
Yellow

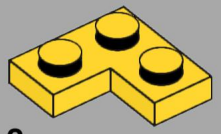

2x
2420
Yellow



8x
3386
Light Aqua

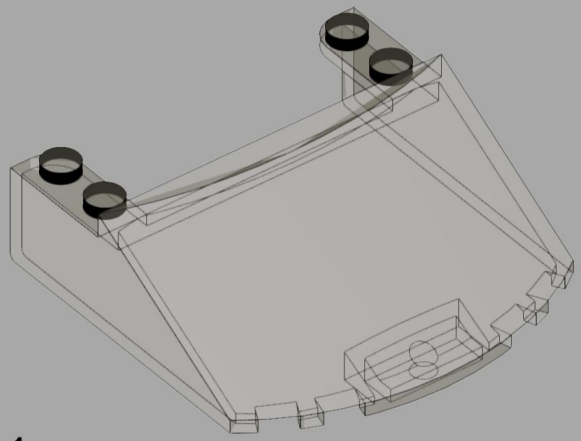

1x
65632
Trans-Brown



4x
18979b
Flat Silver

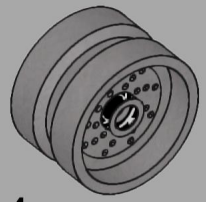

4x
66727
Flat Silver



4x
18977
Rubber Black