VANQUISH



2

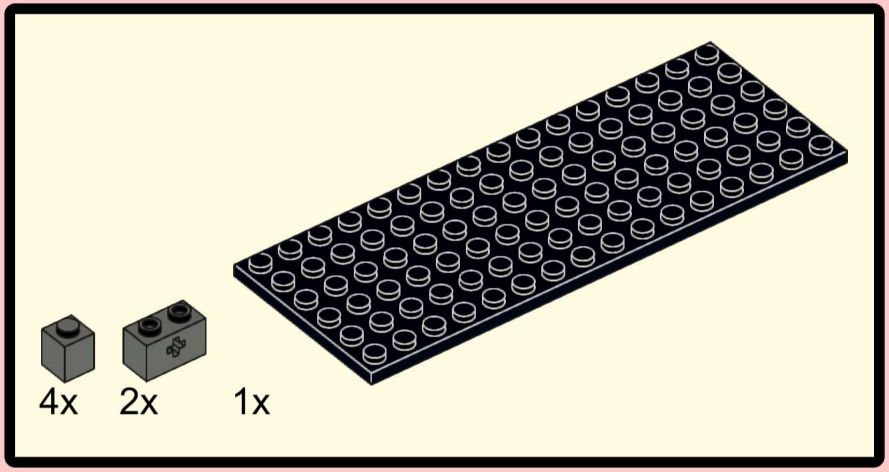

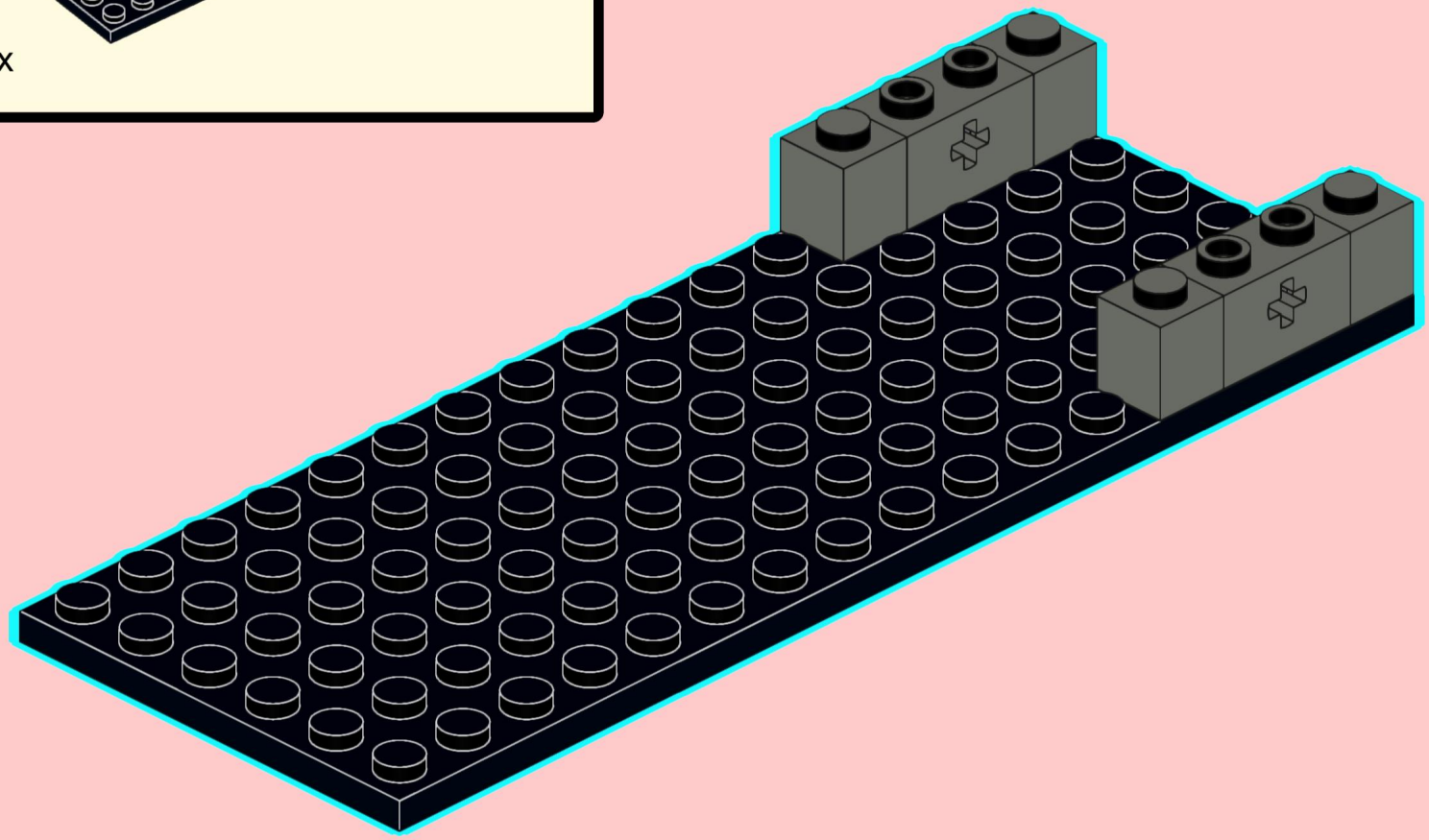

3

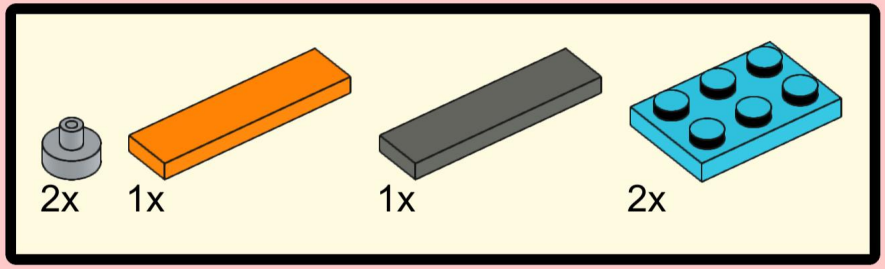

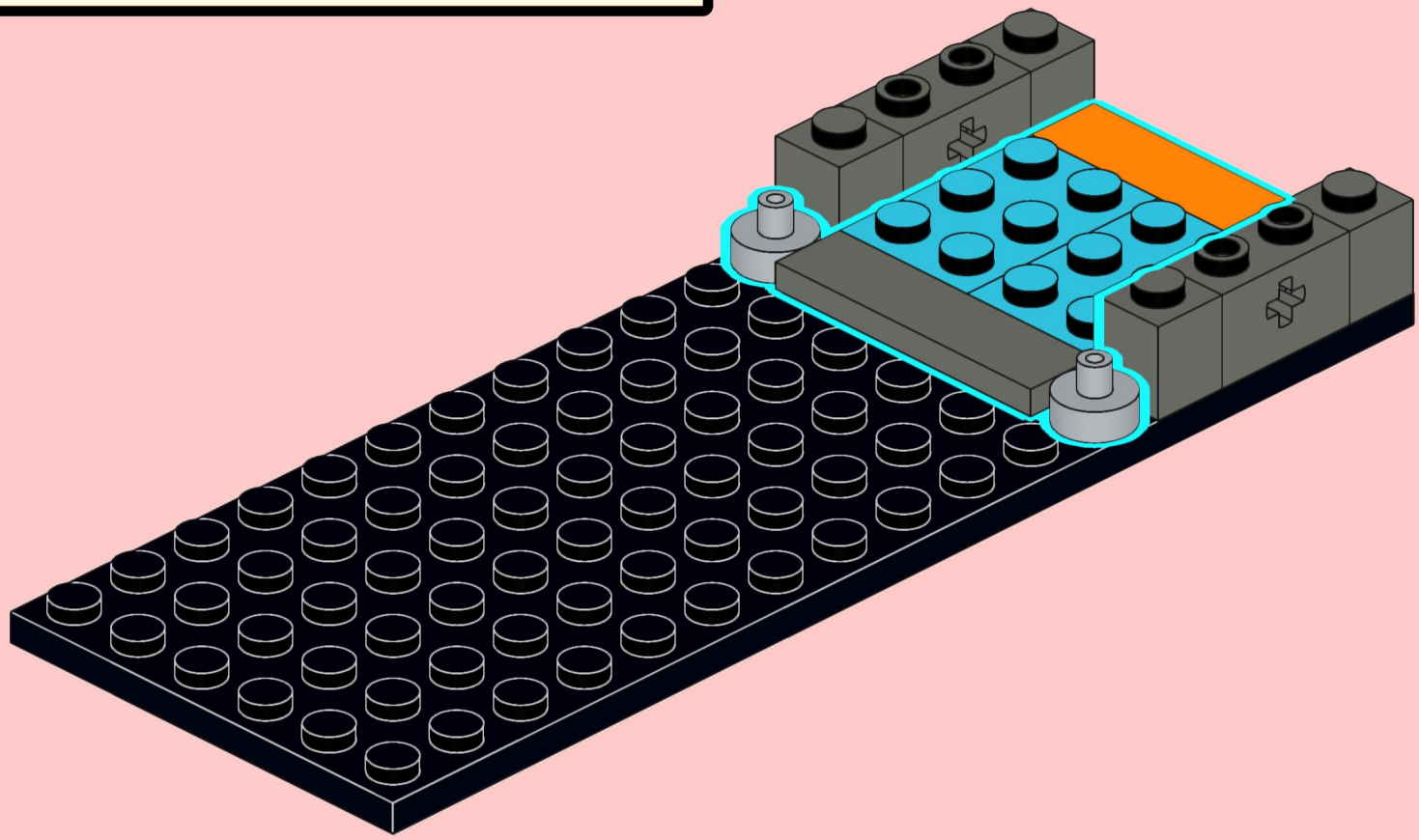

4

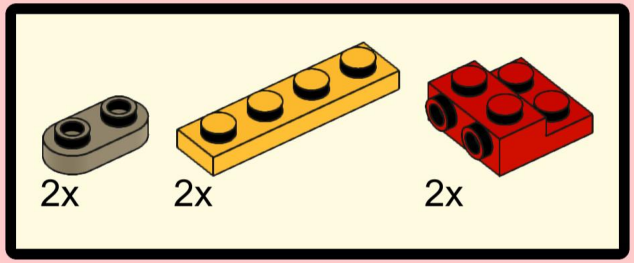

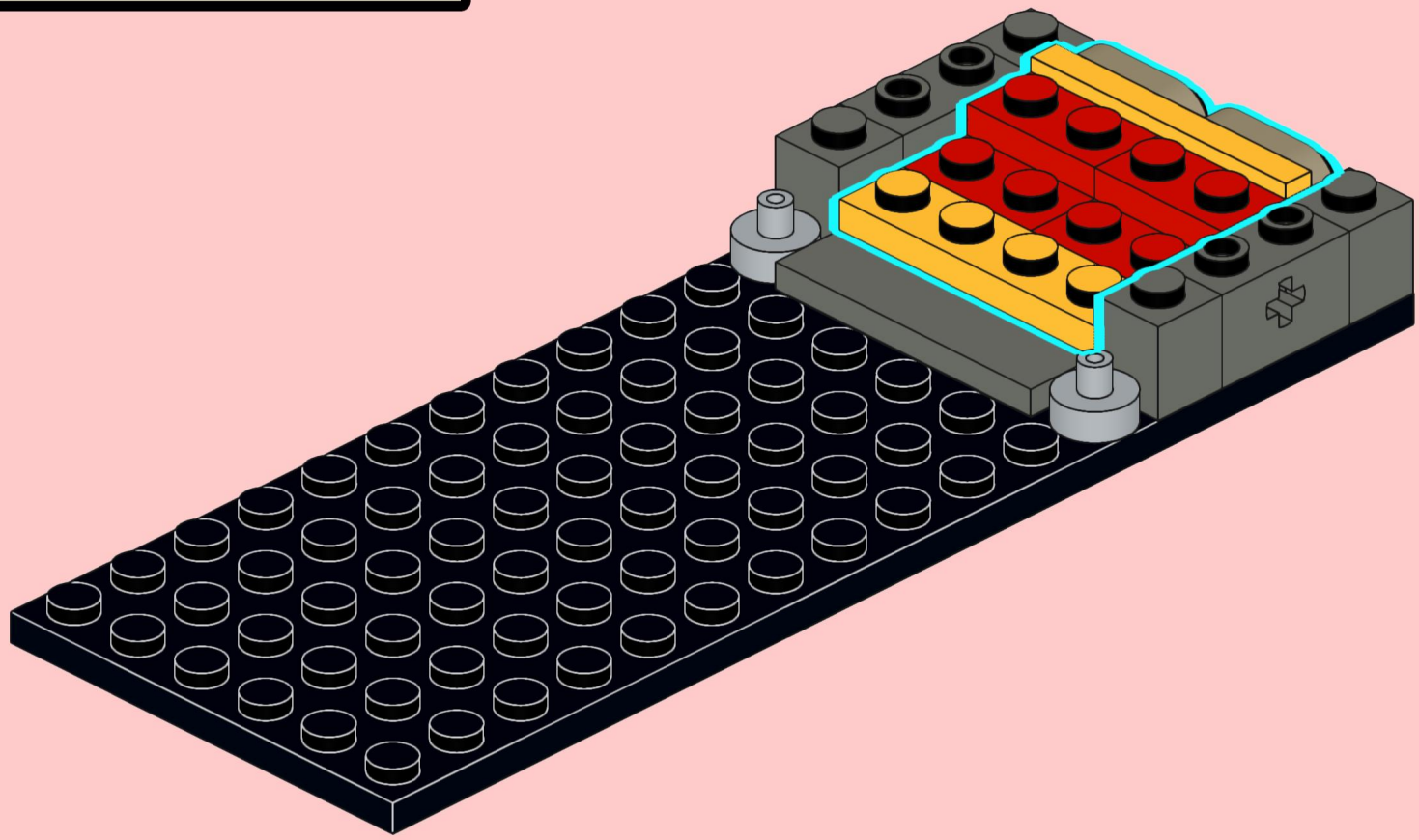

5

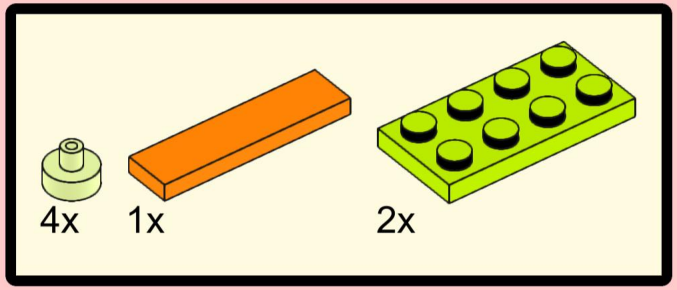

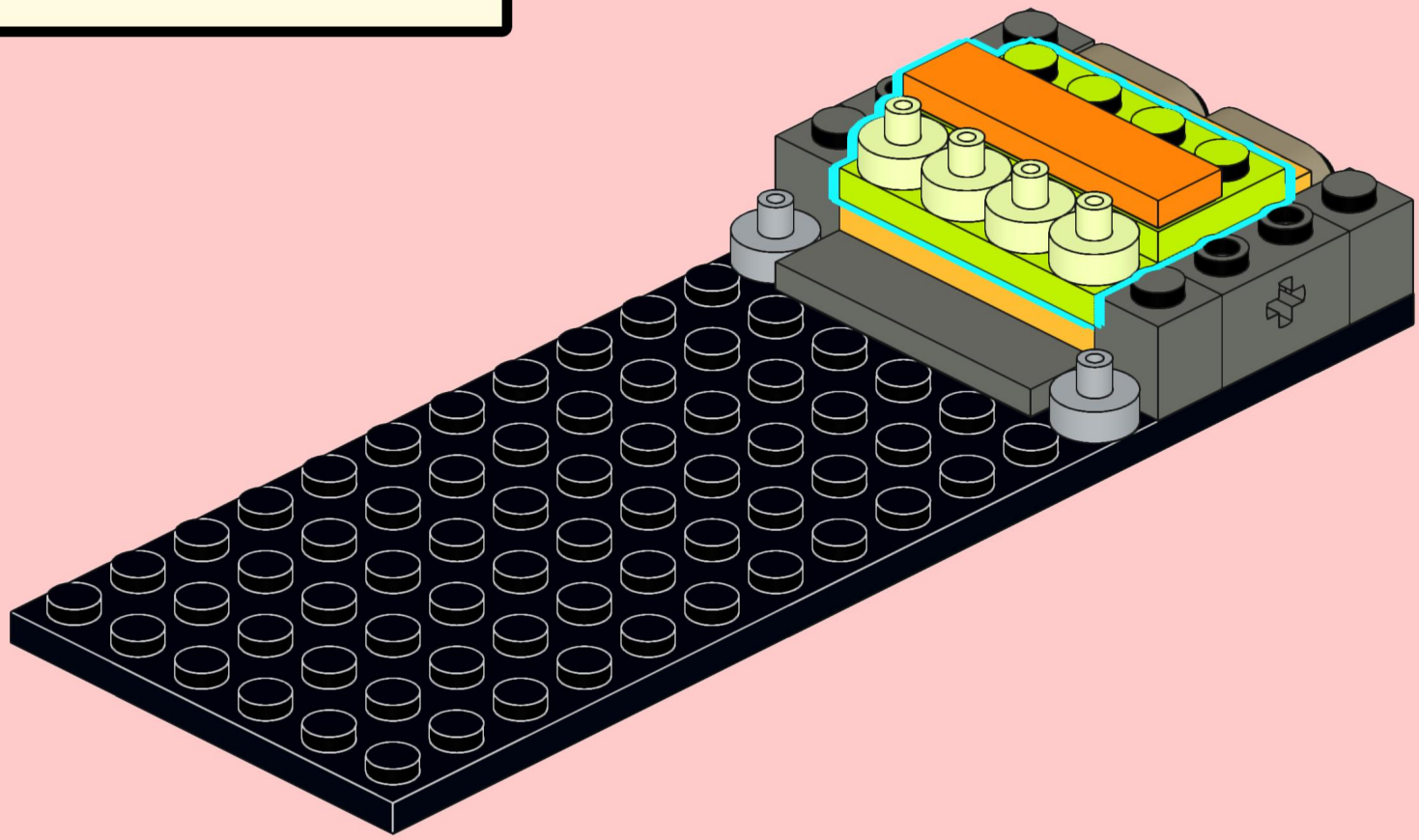

6

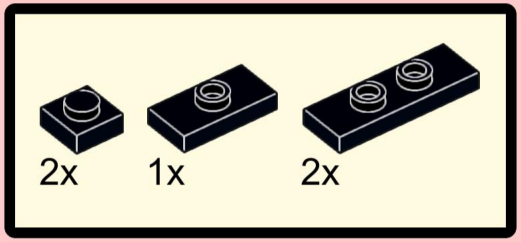

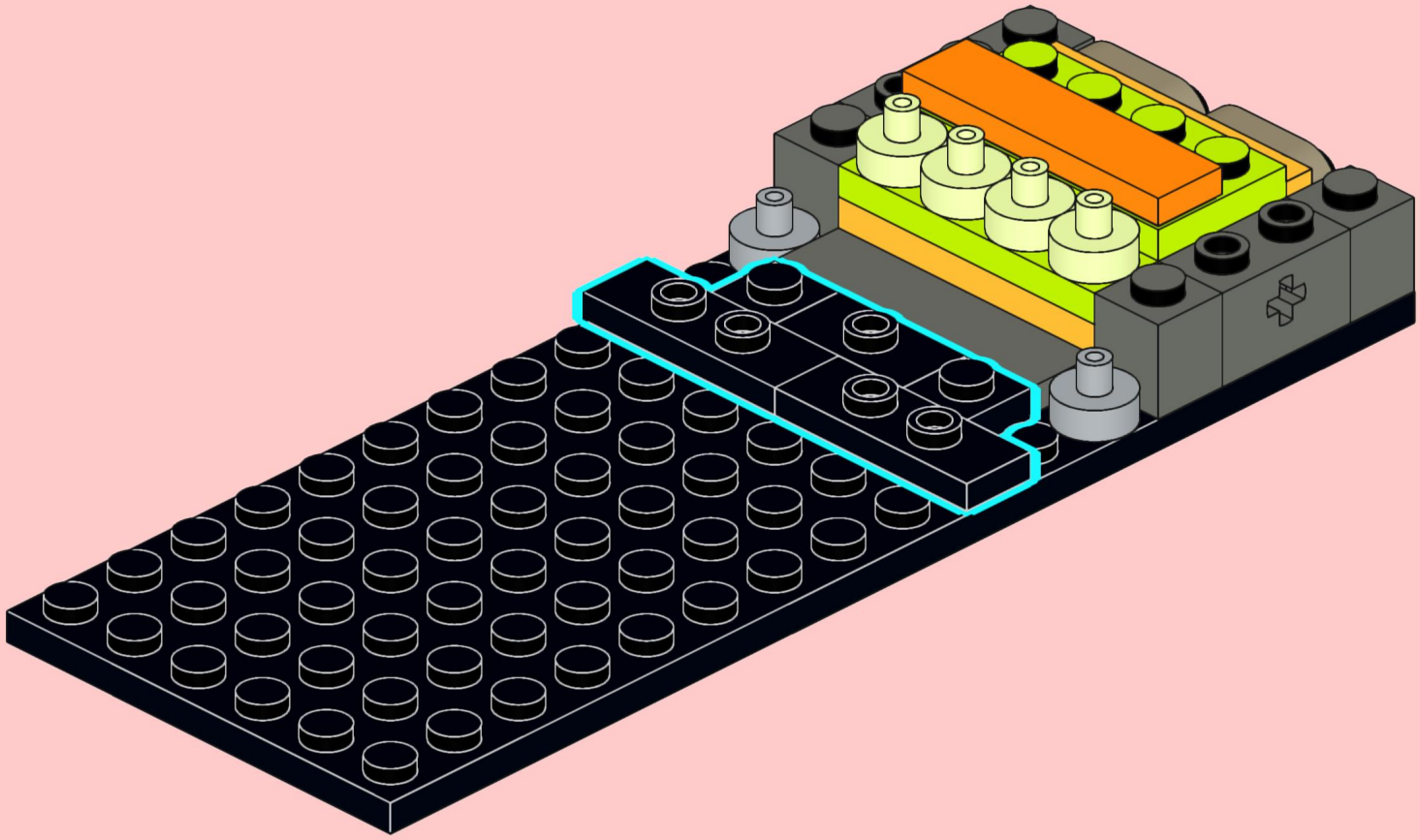

7

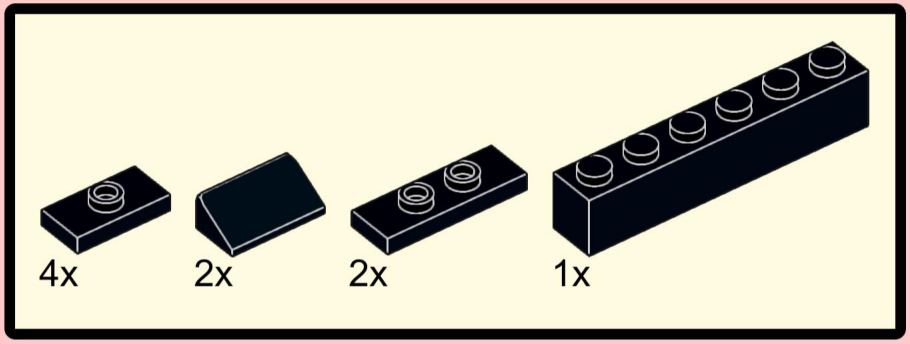

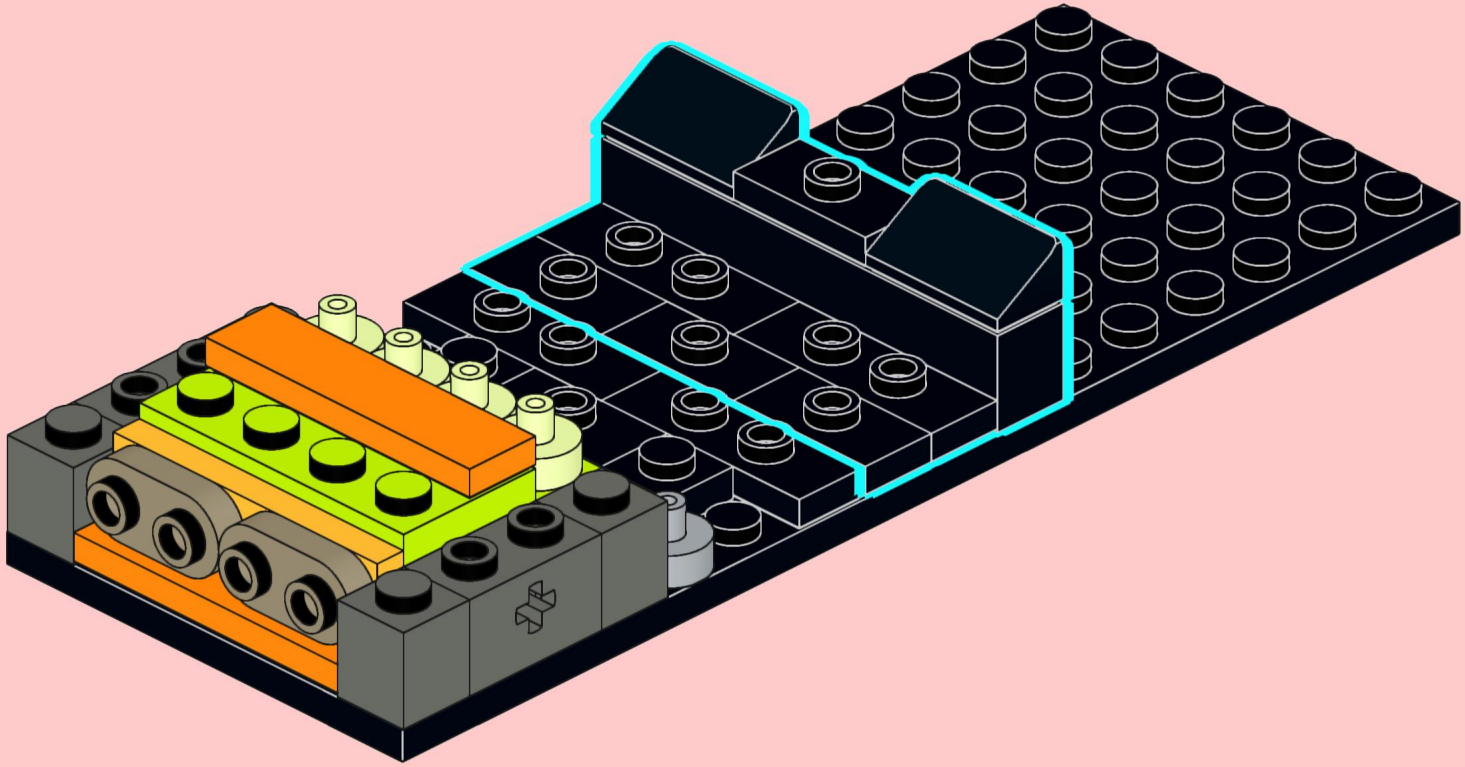

8

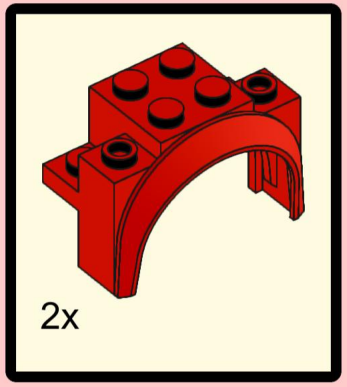

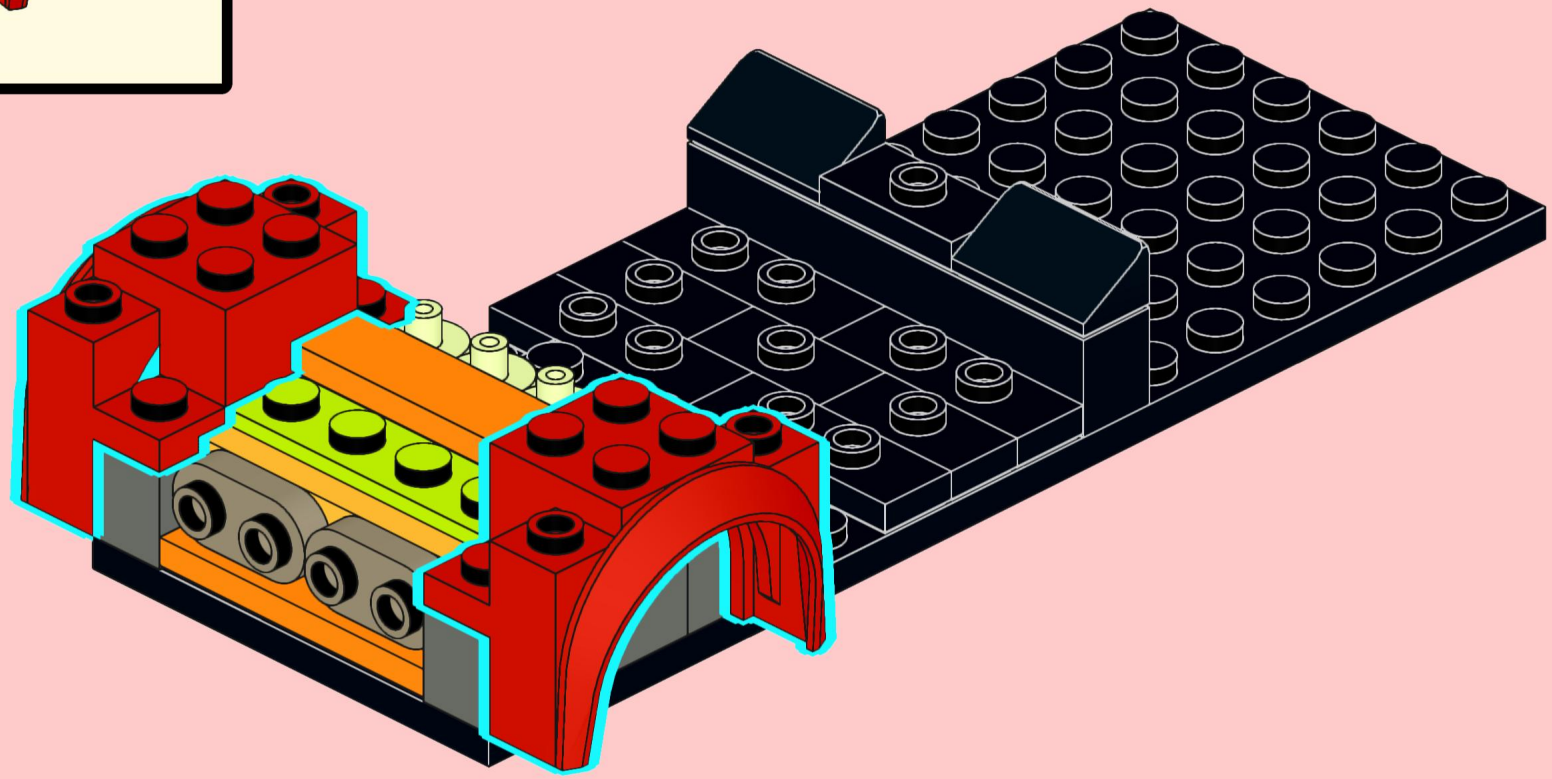

9

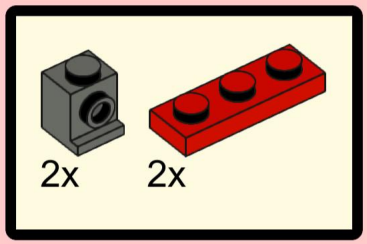

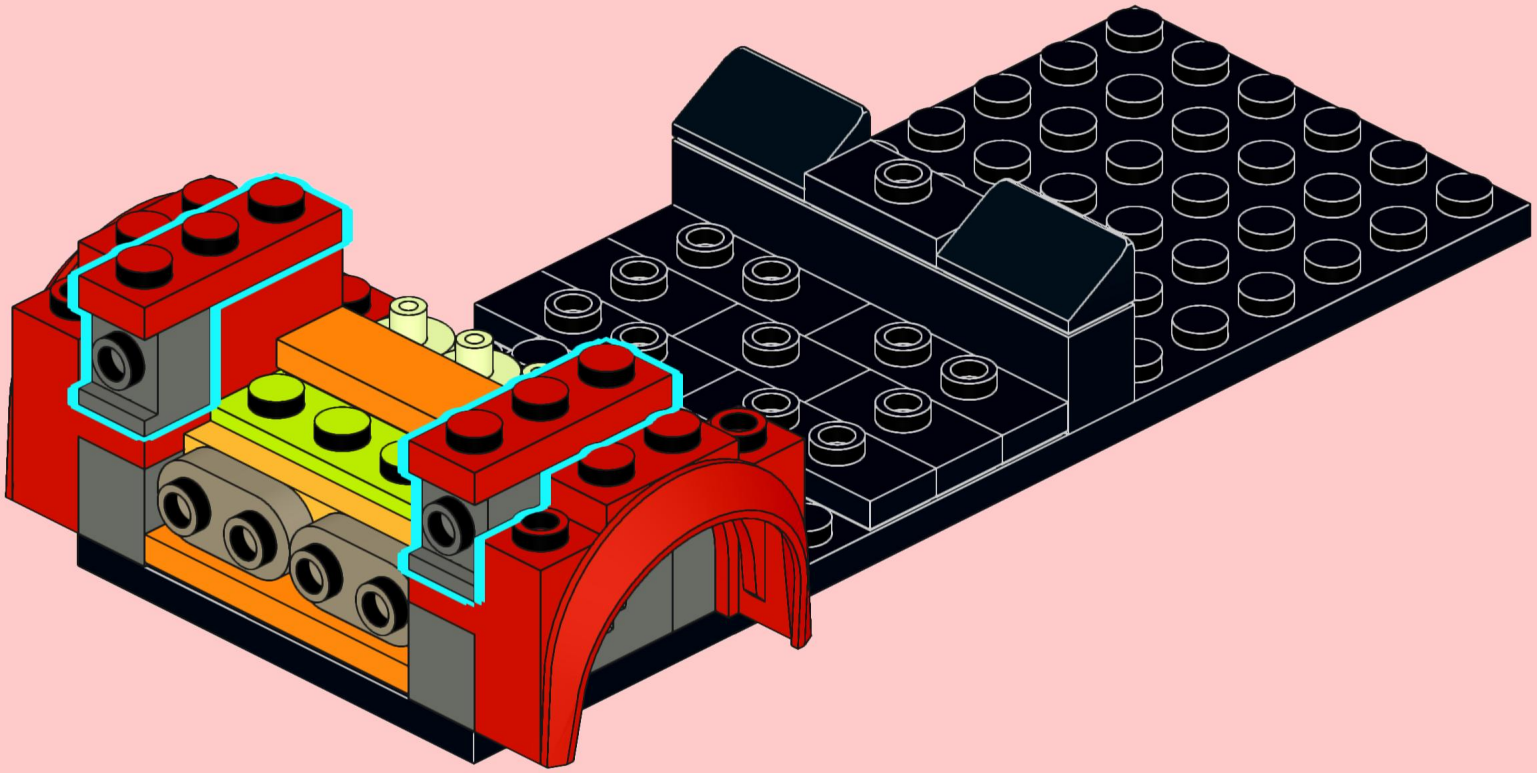

10

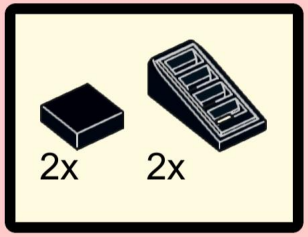

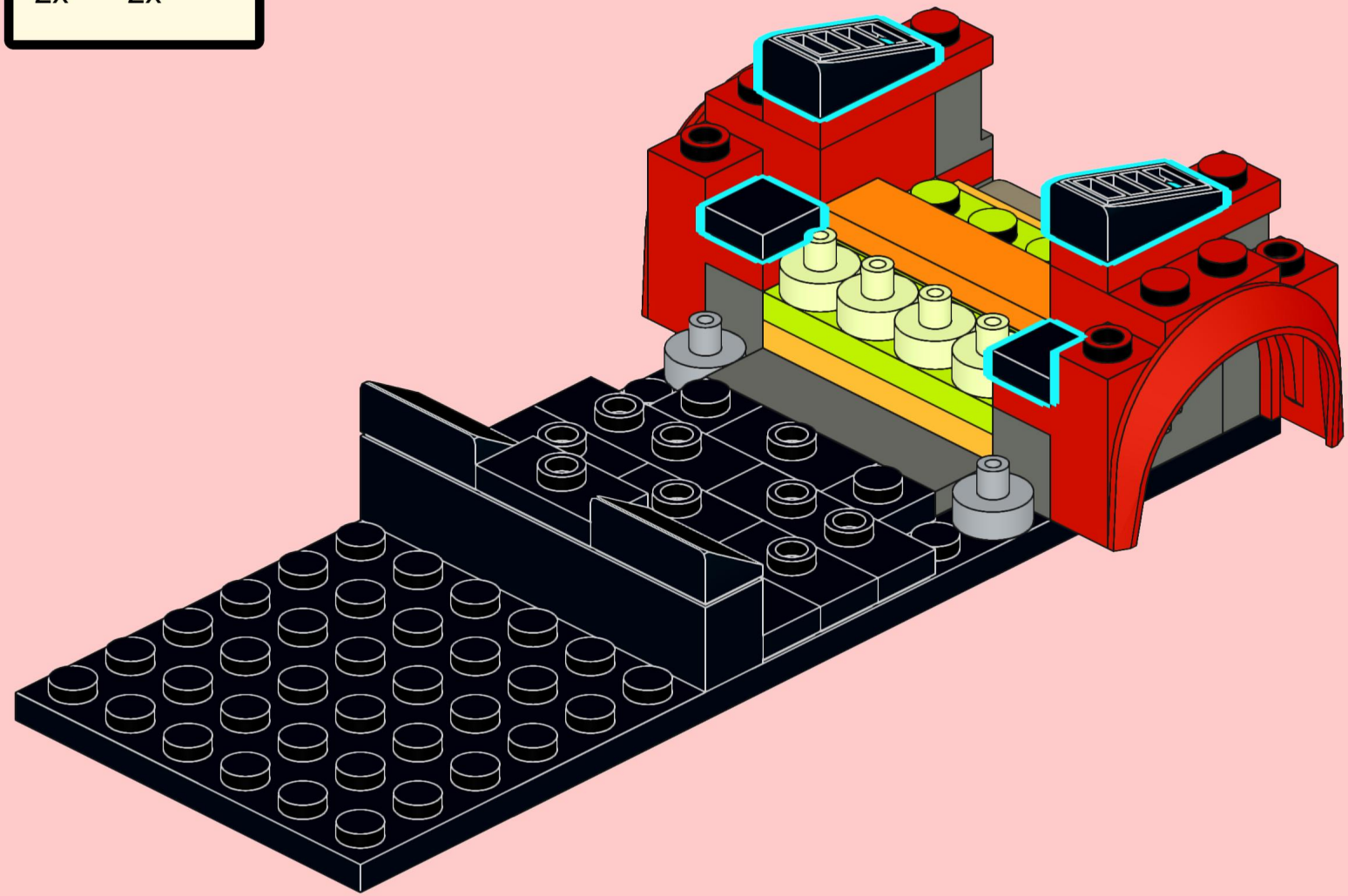

11

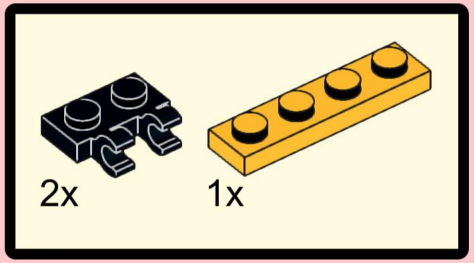

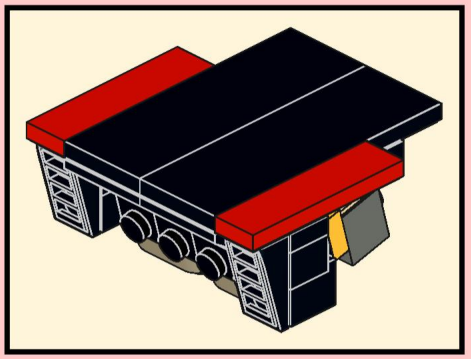

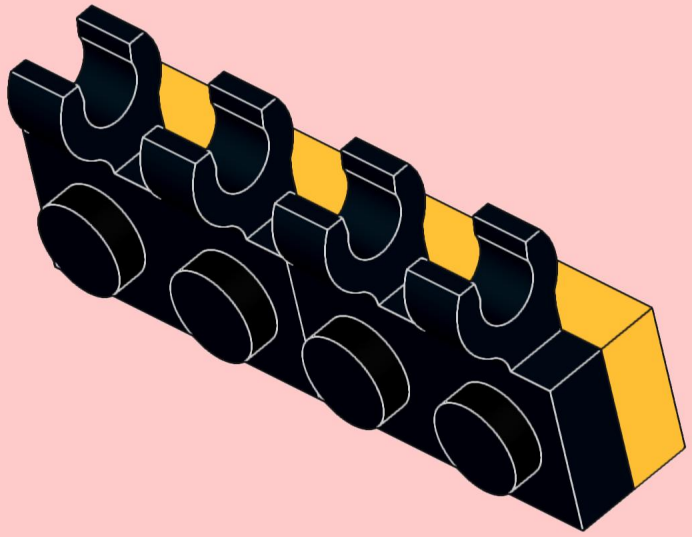

12

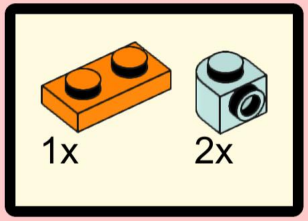

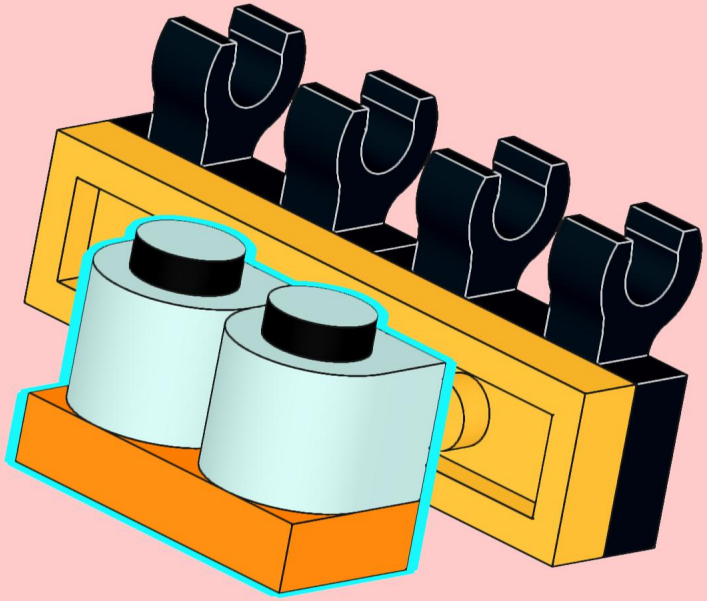

13

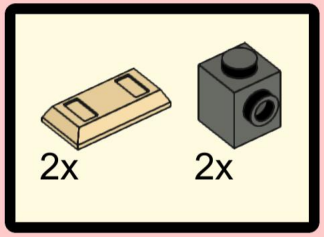

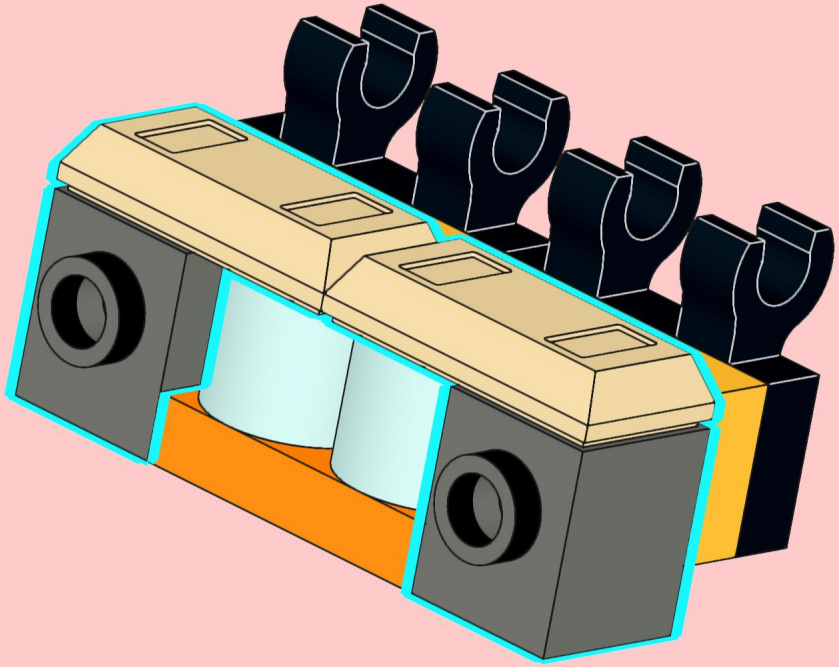

14

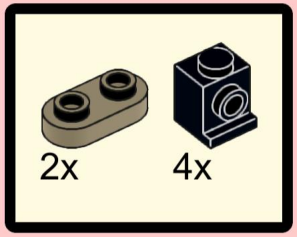

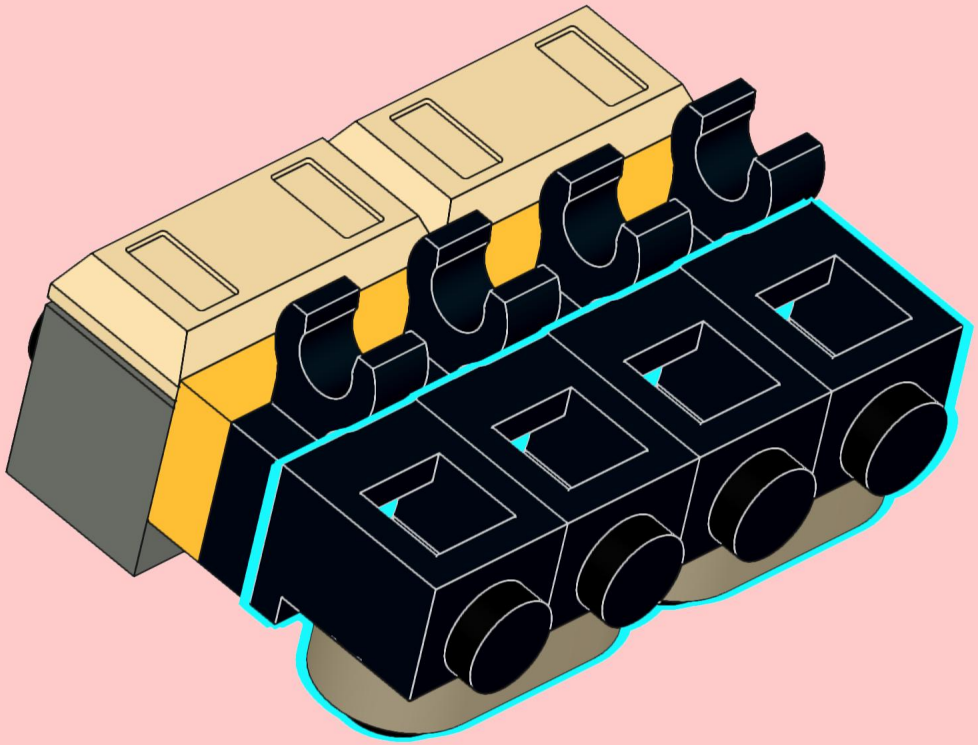

15



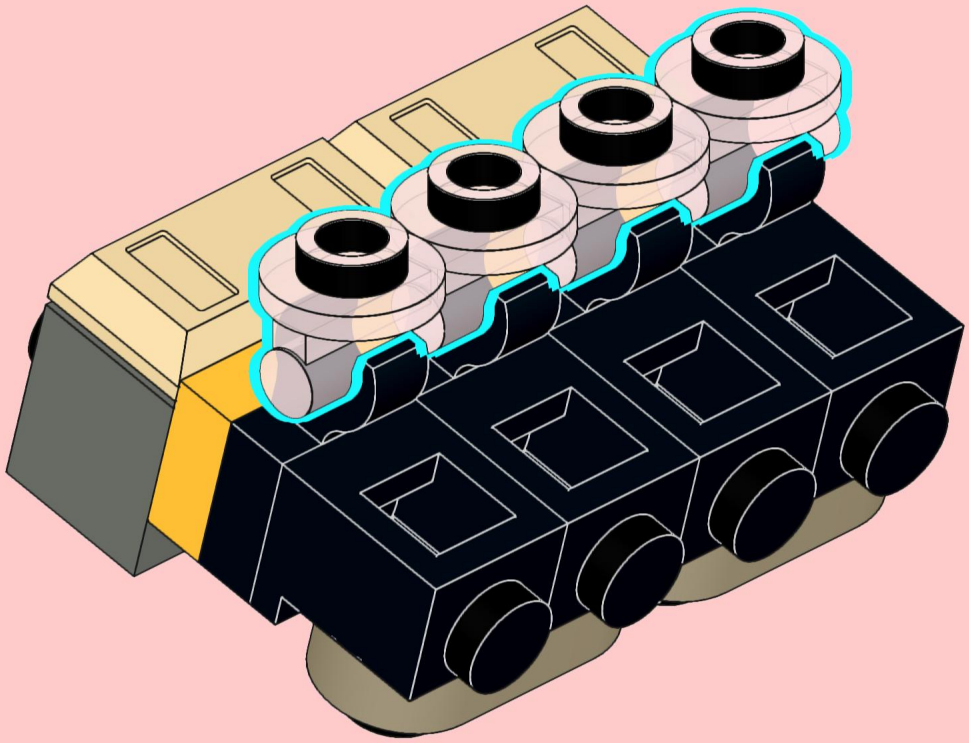

16

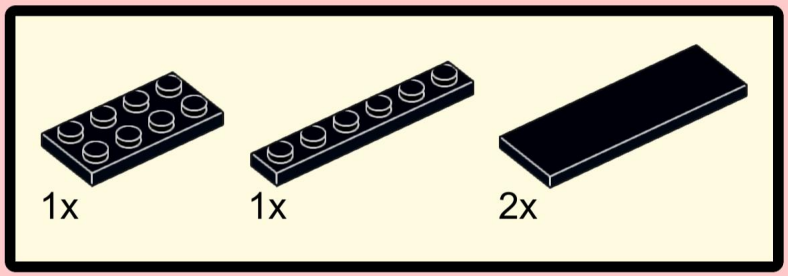

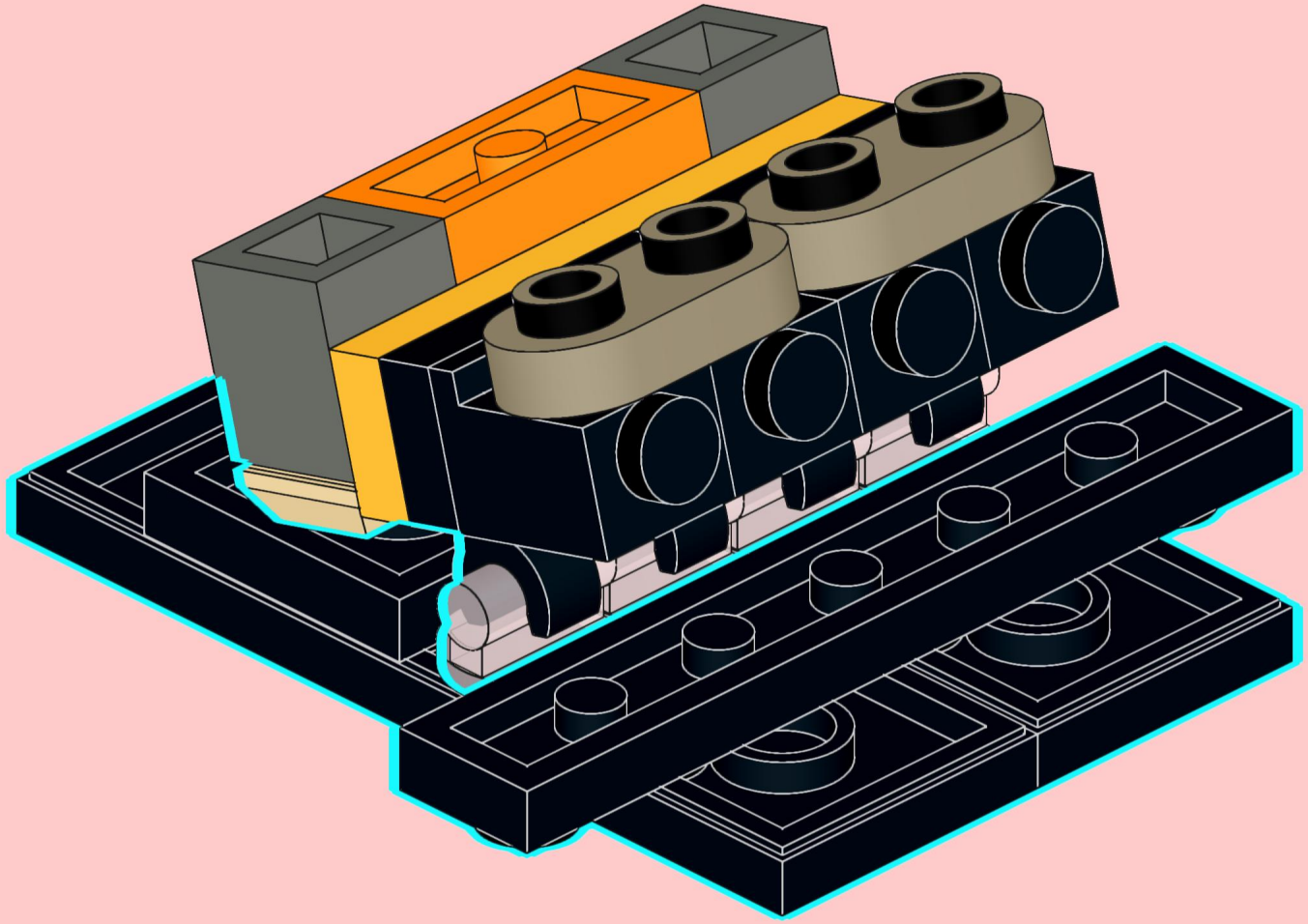

17

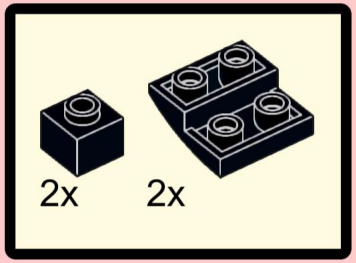

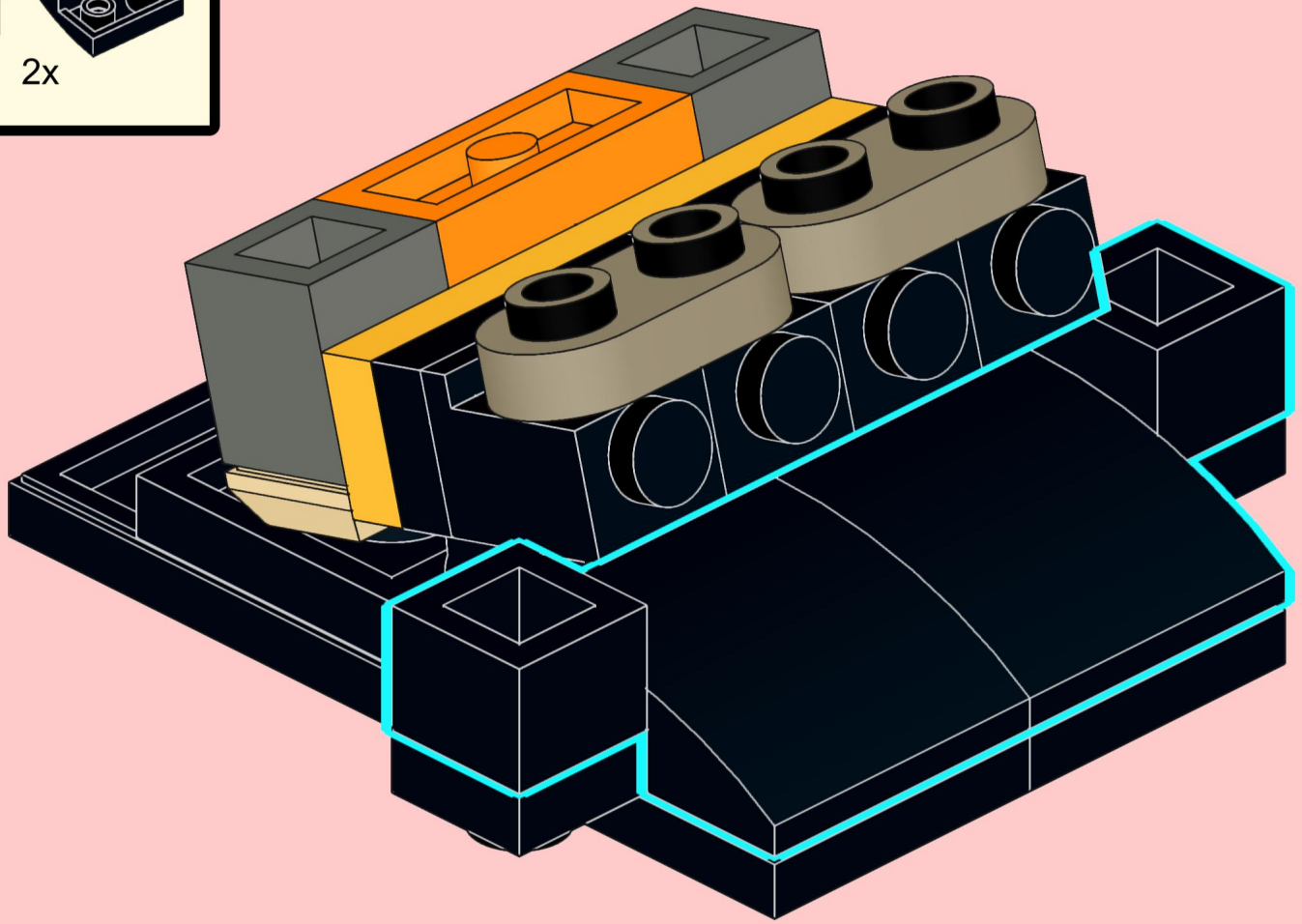

18

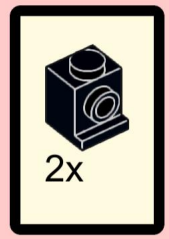

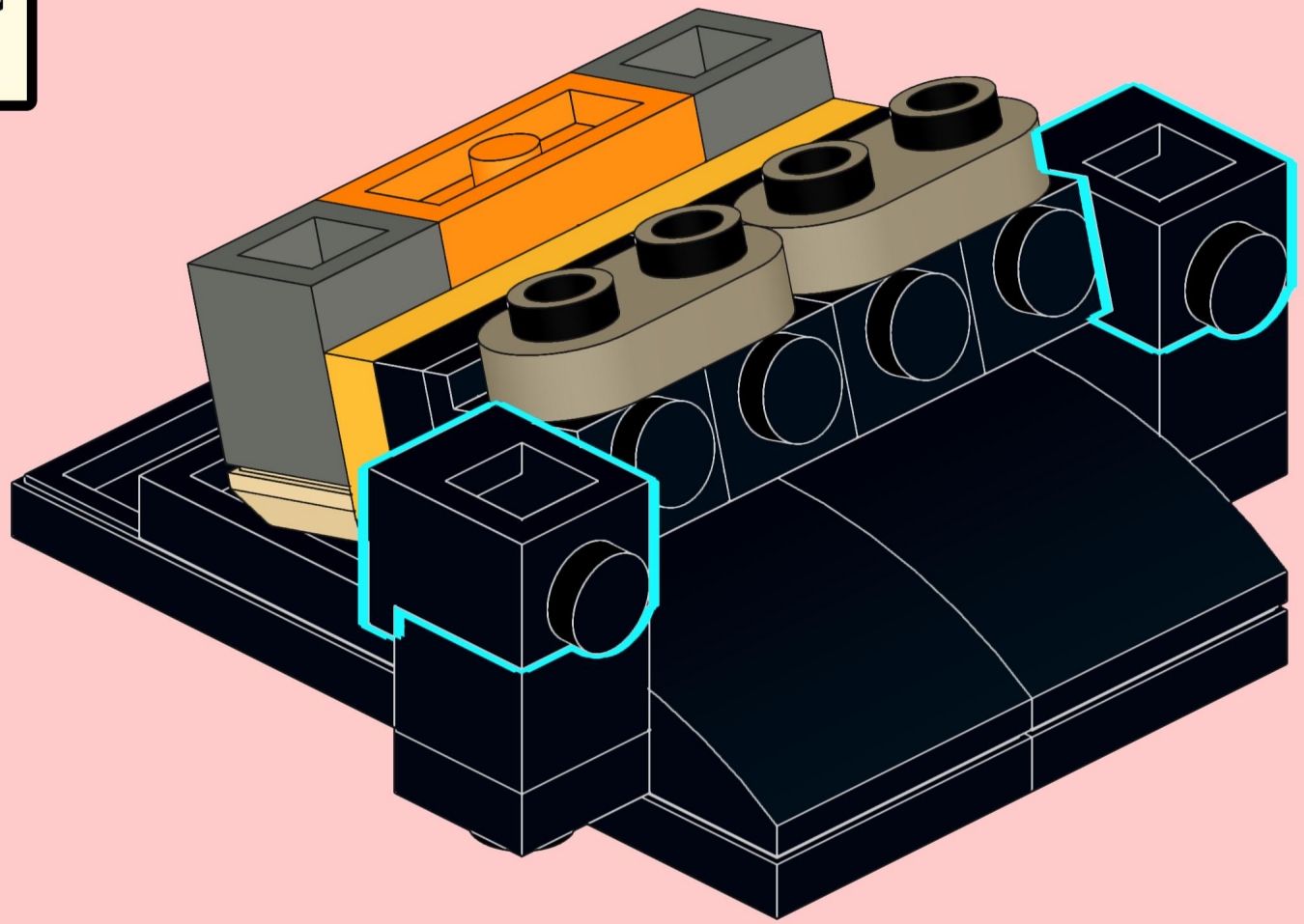

19

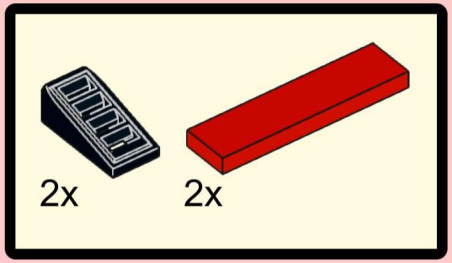

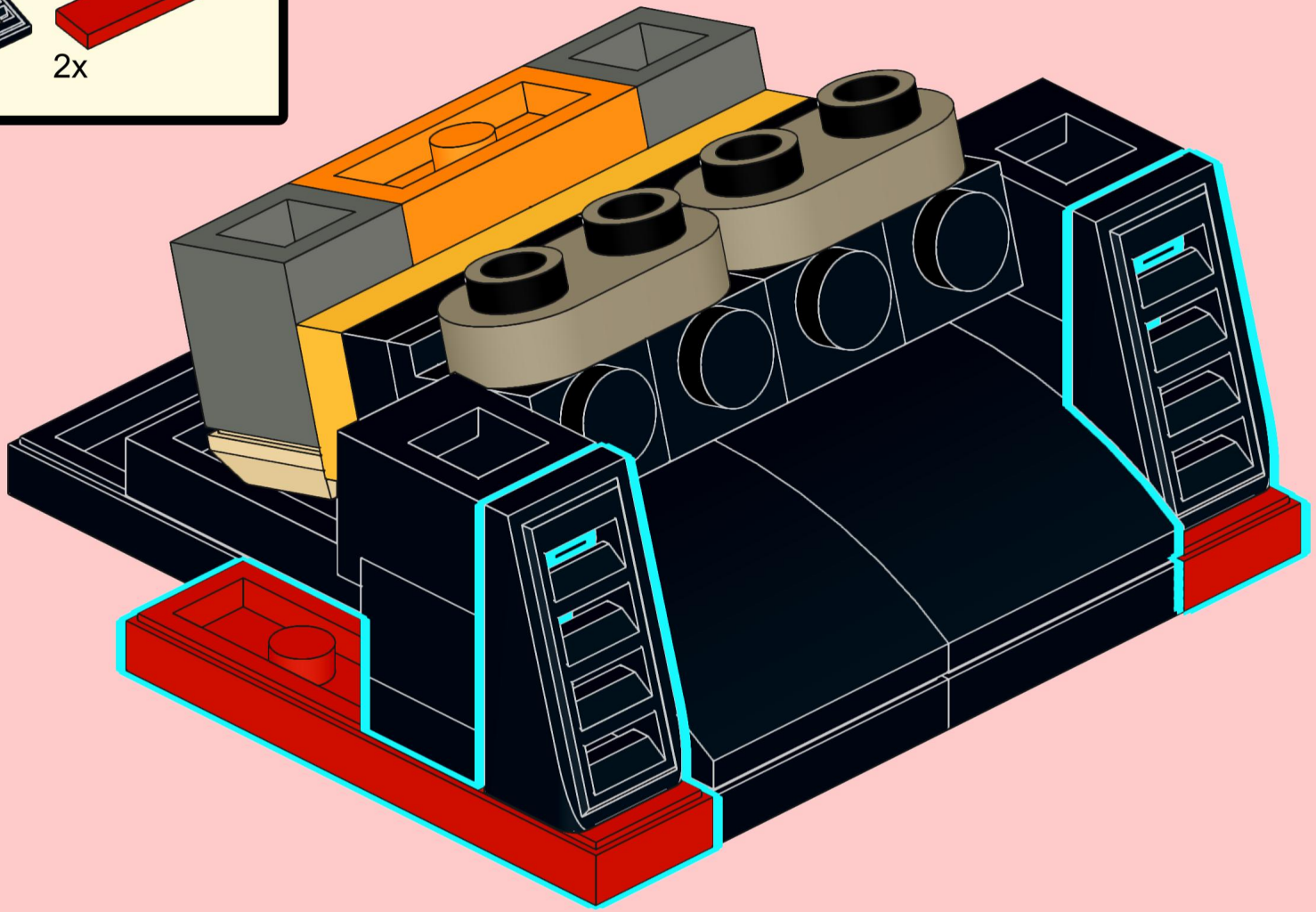

20

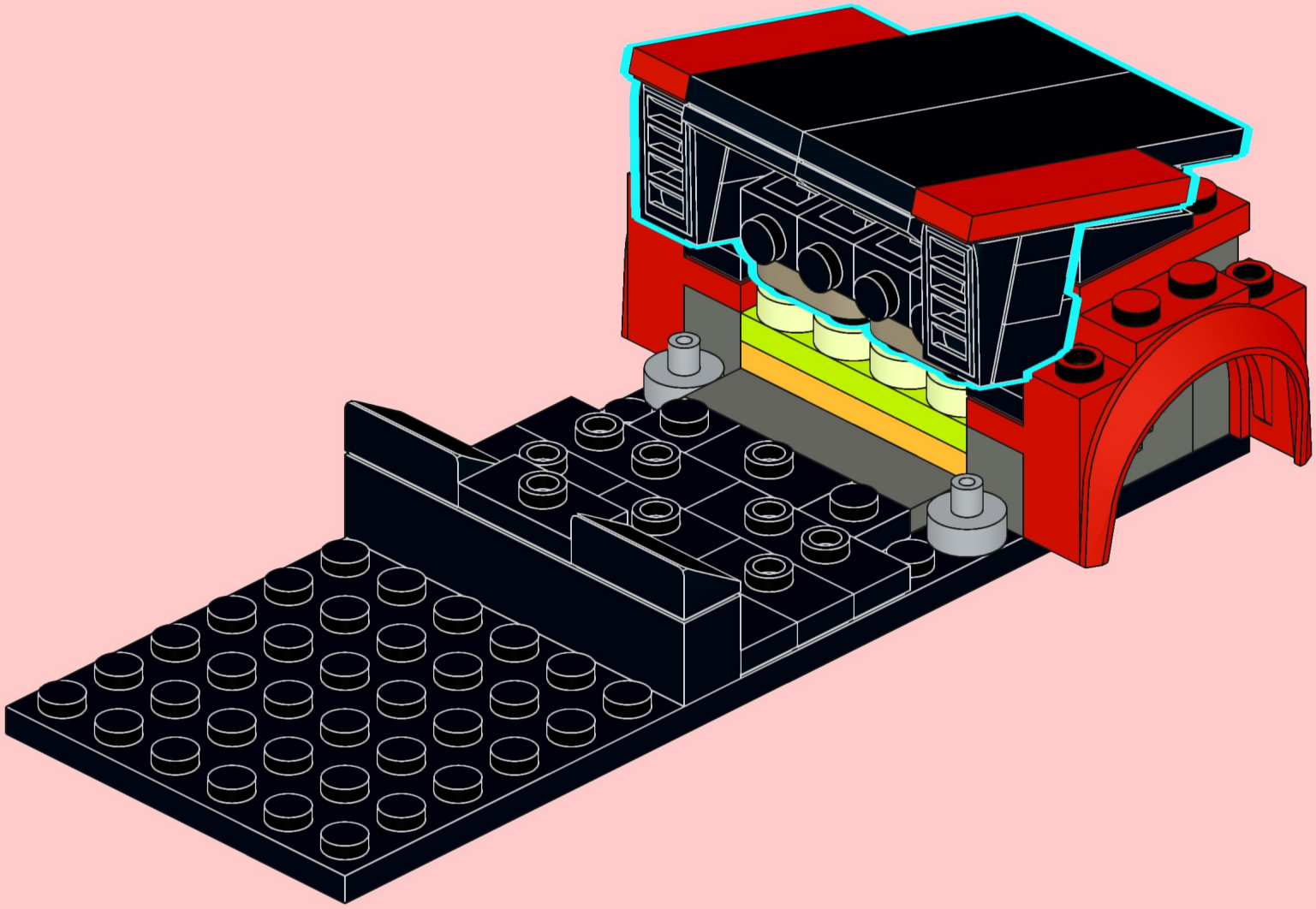

21

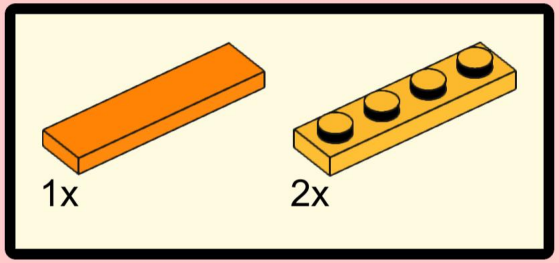

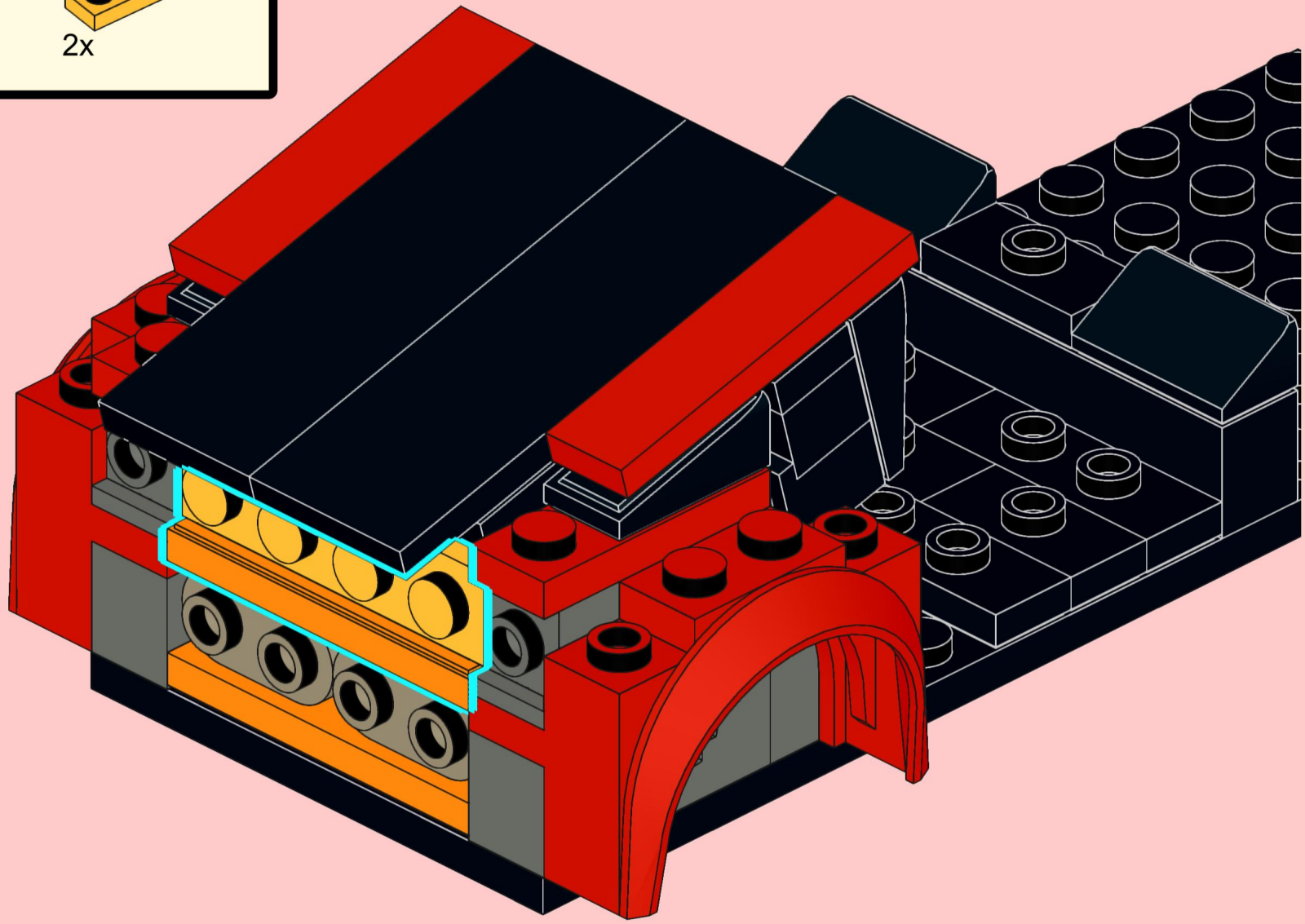

22

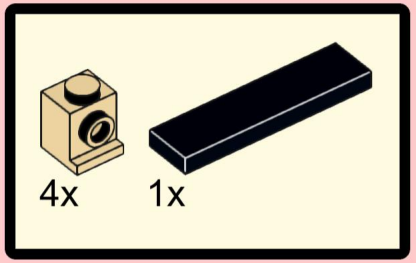

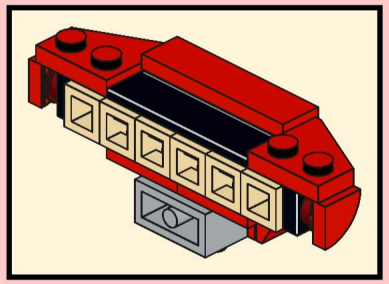

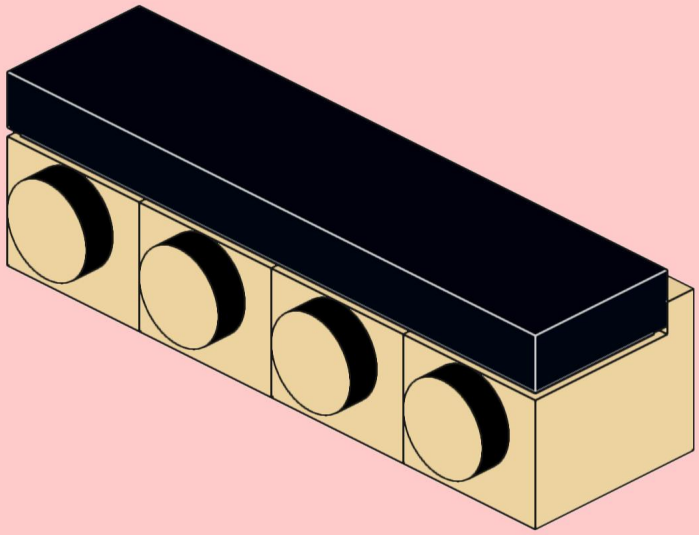

23

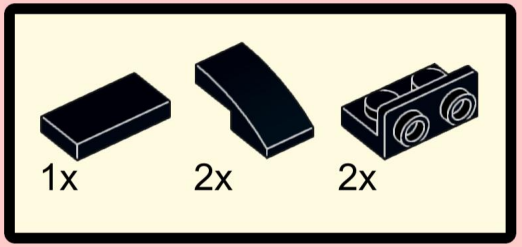

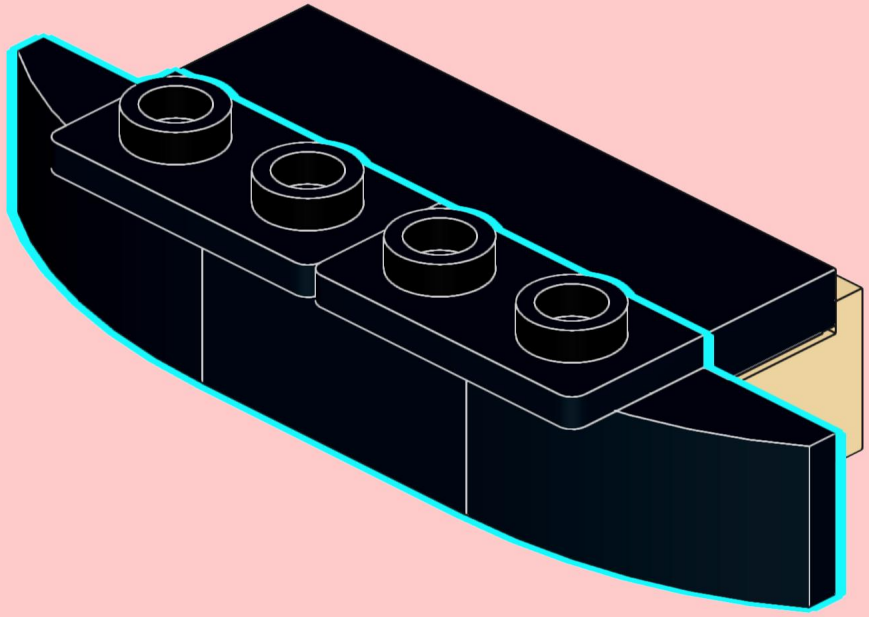

24

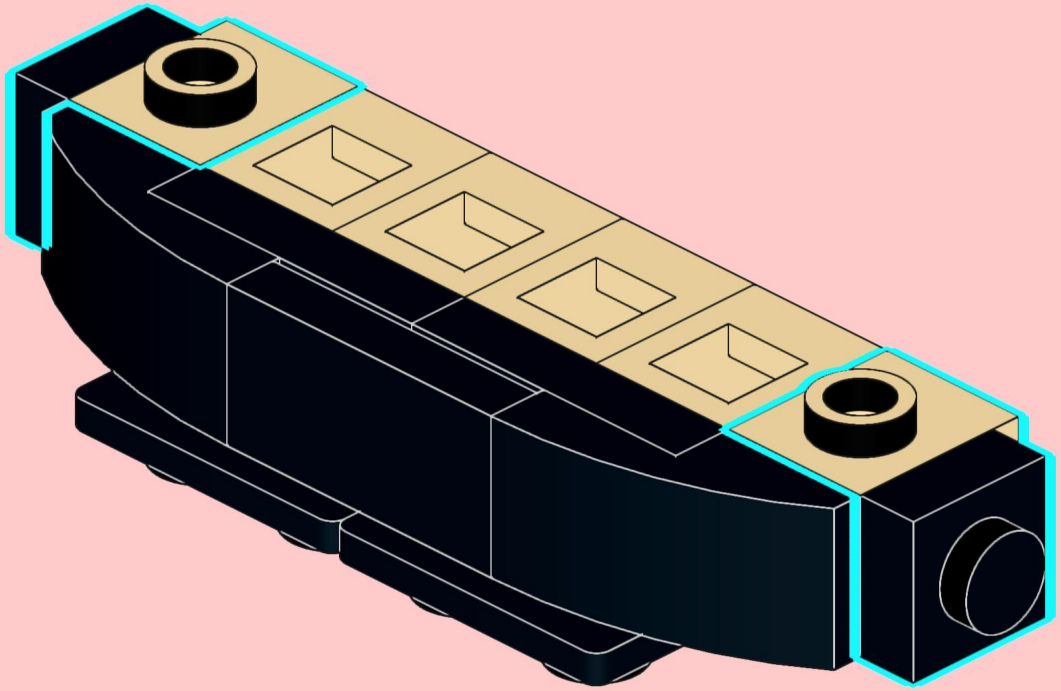

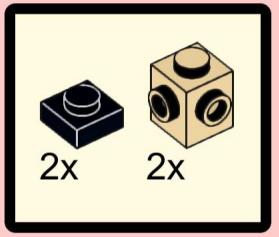

25

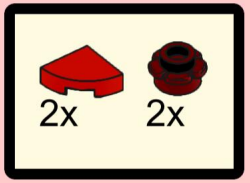

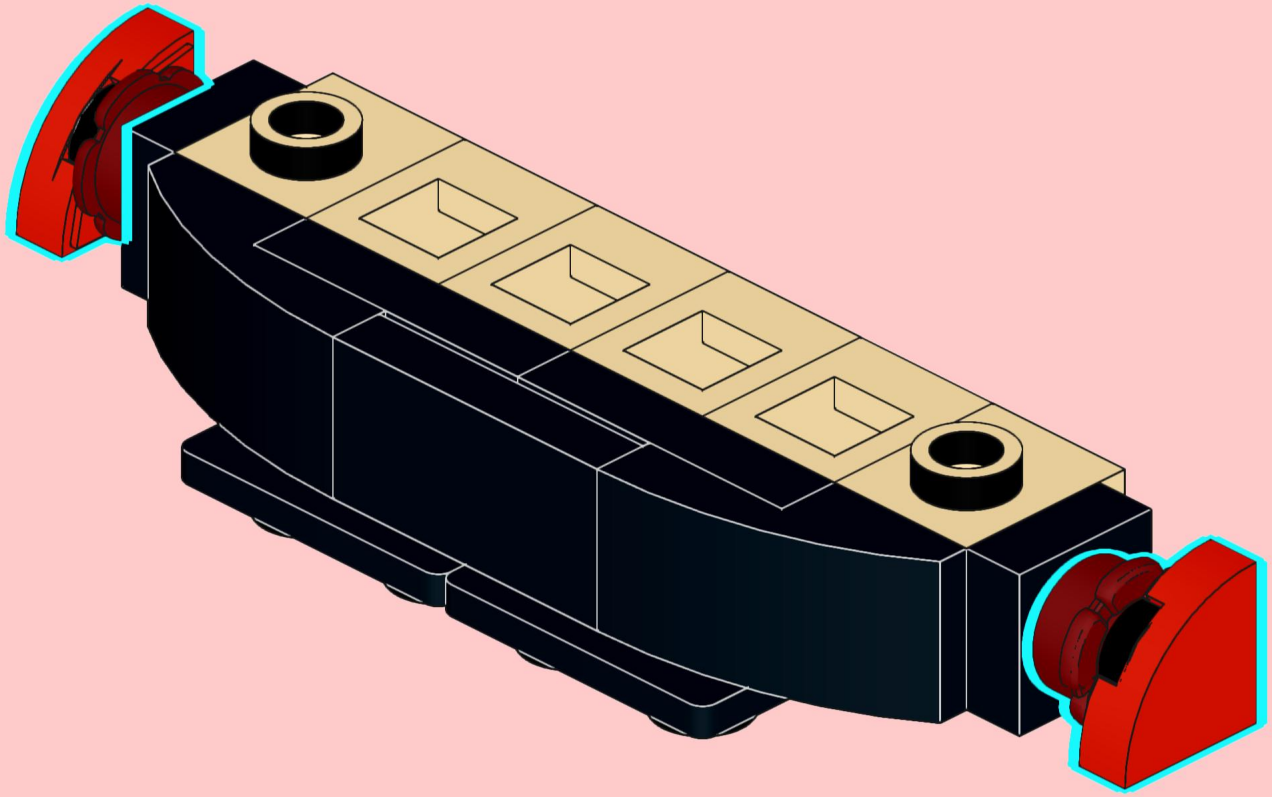

26

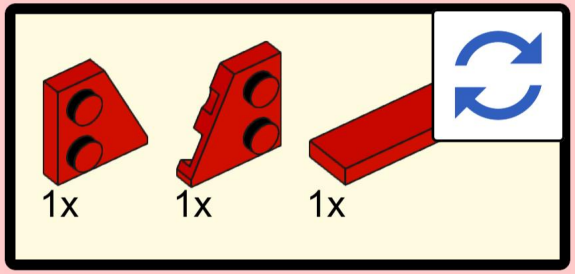

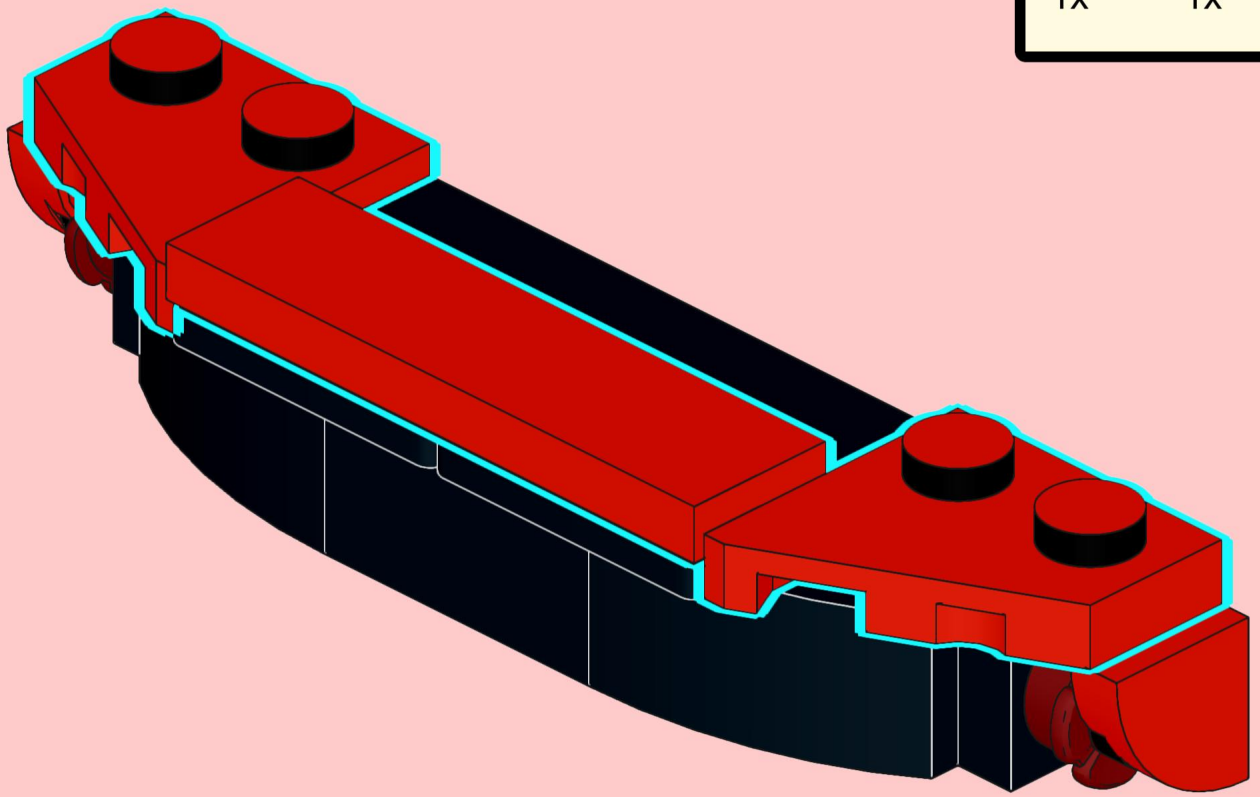

27

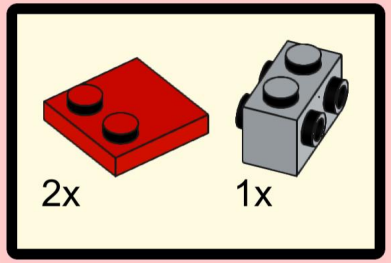

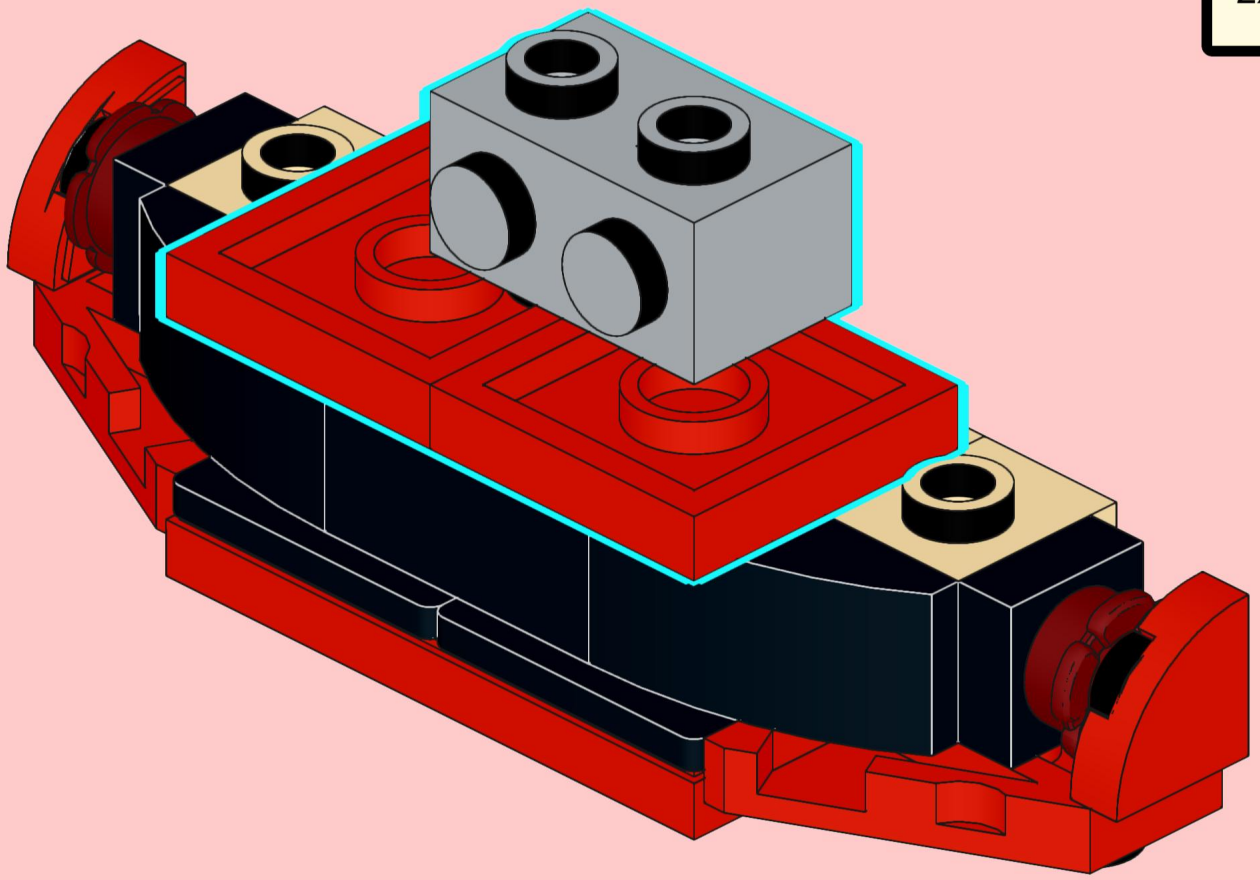

28

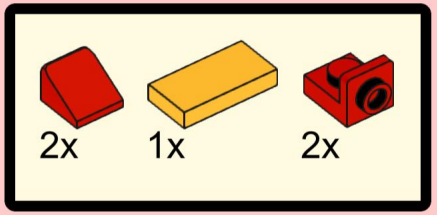

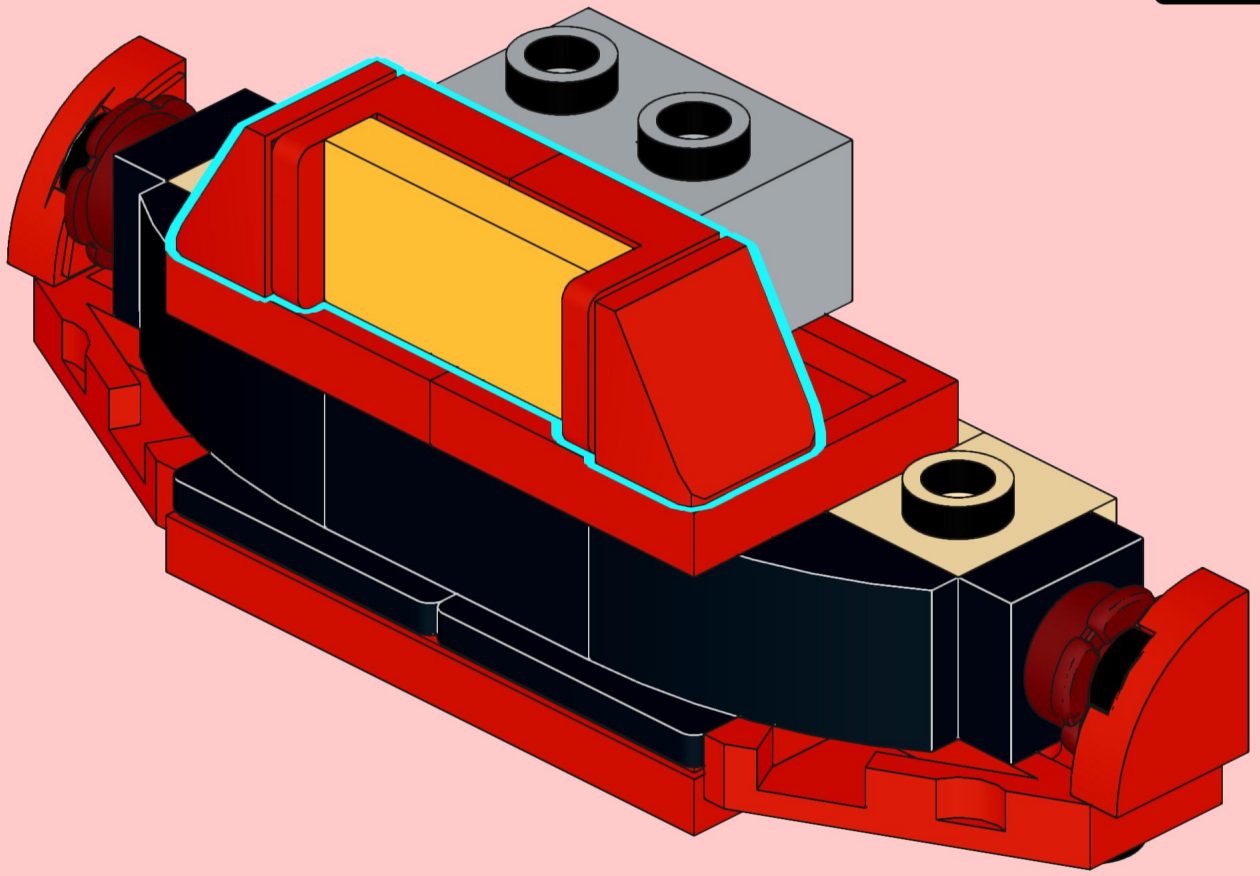

29

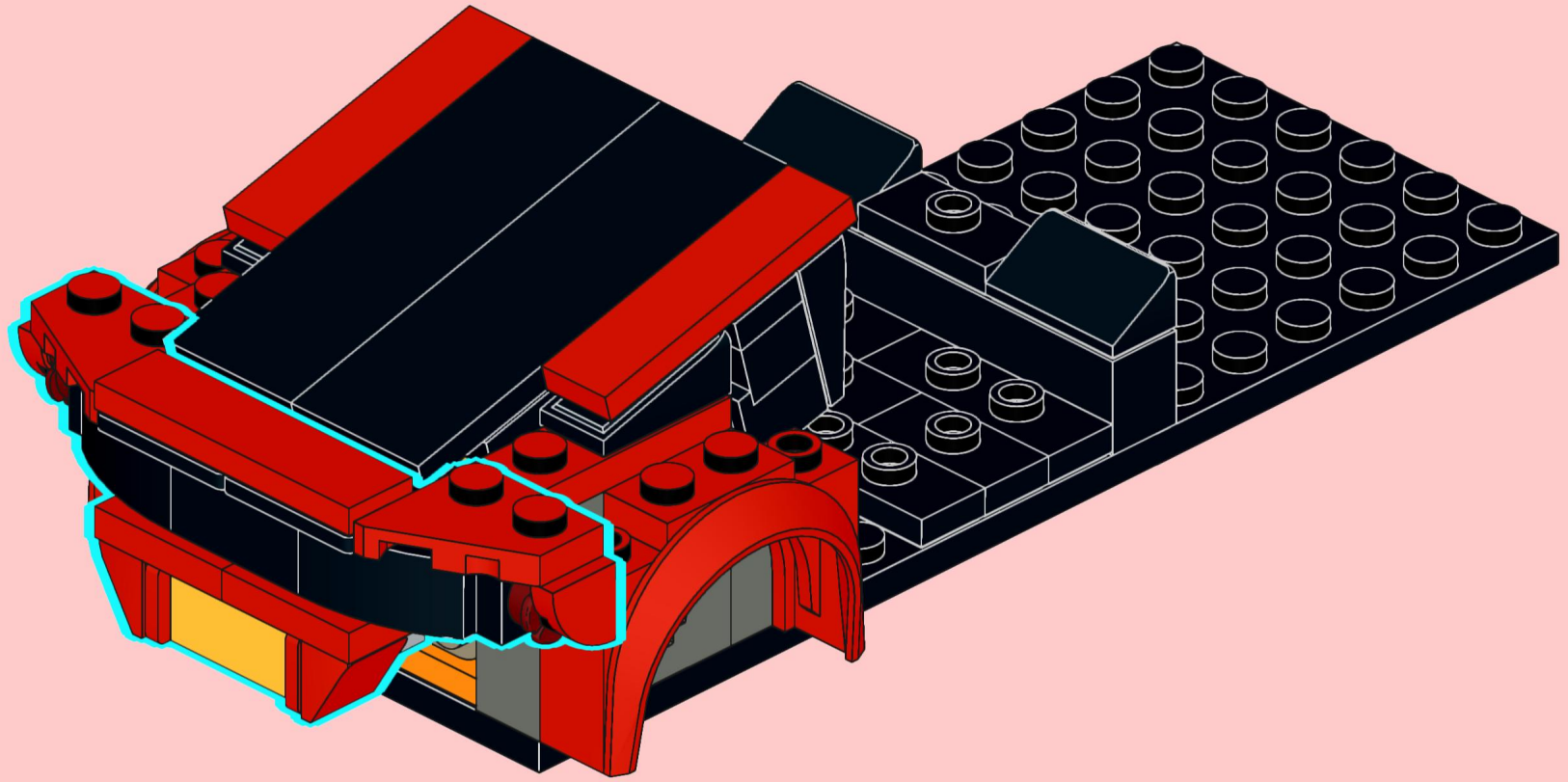

30

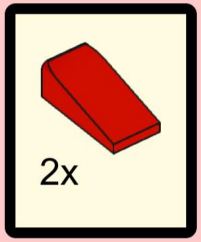

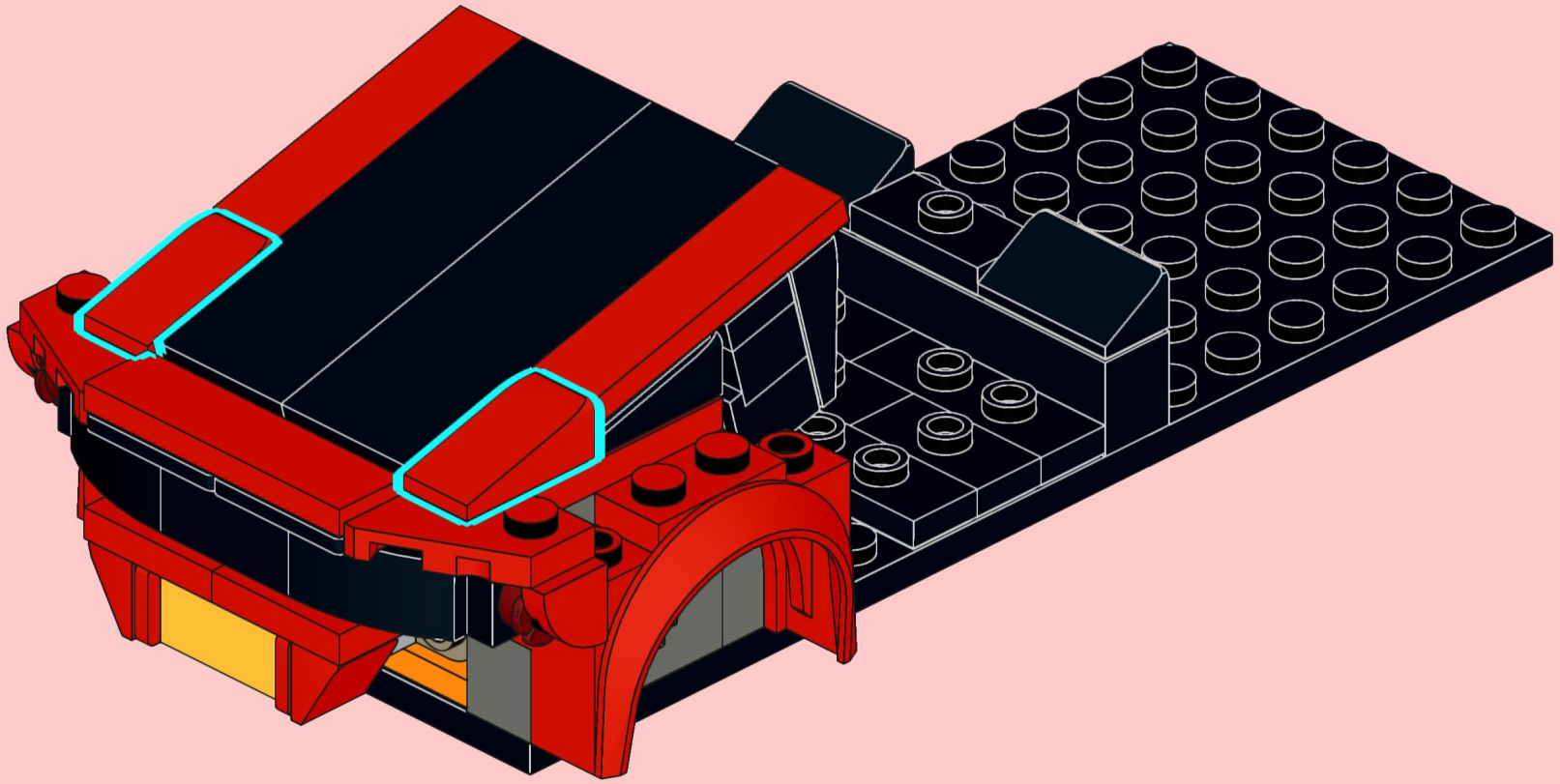

31

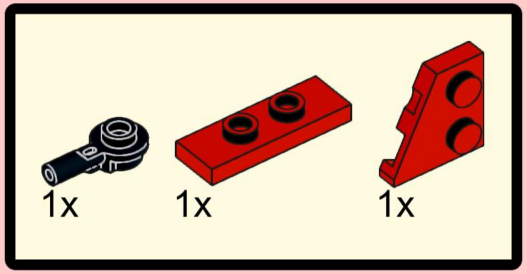

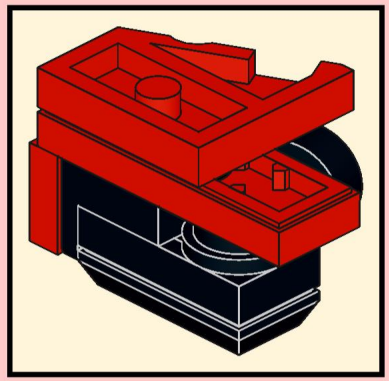

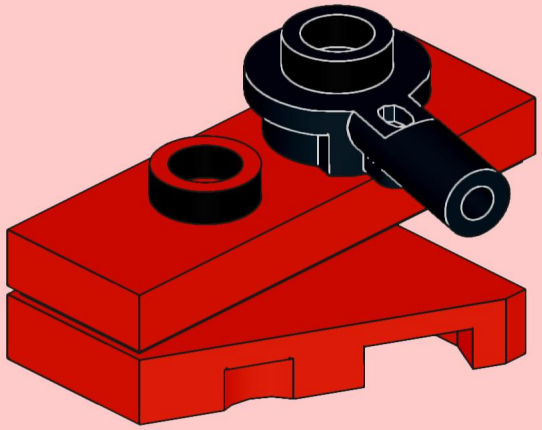

32

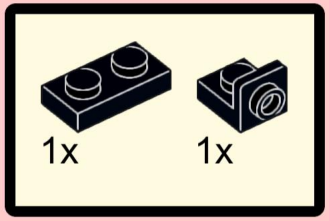

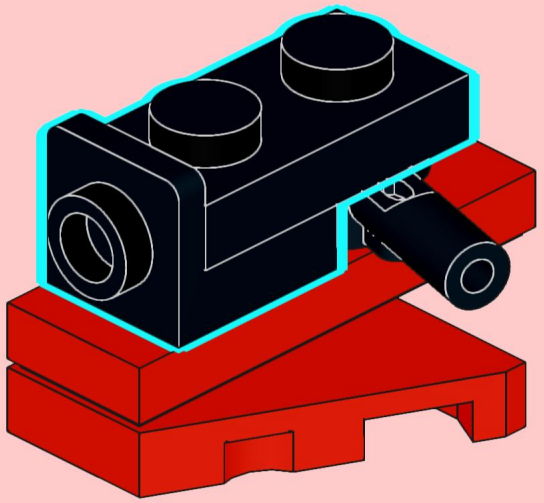

33

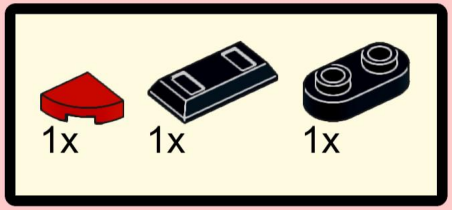

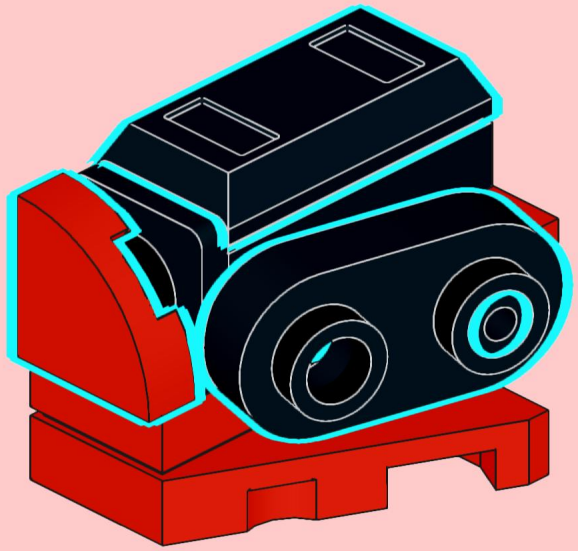

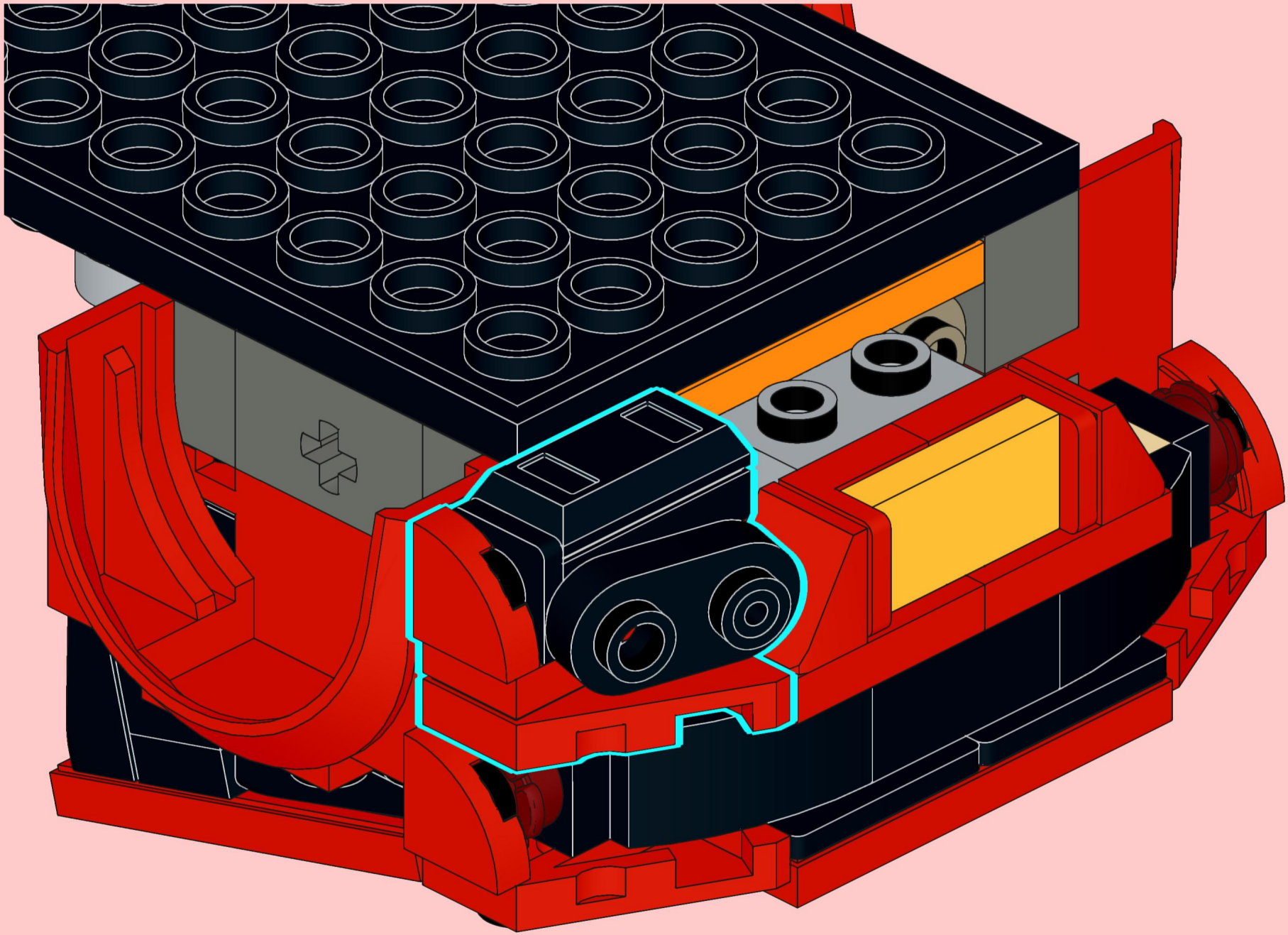

35

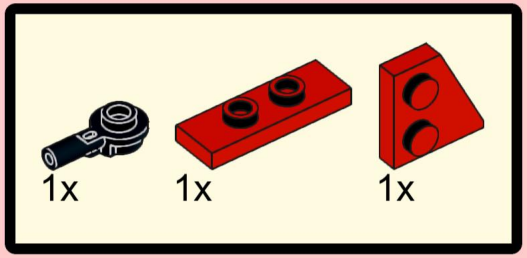

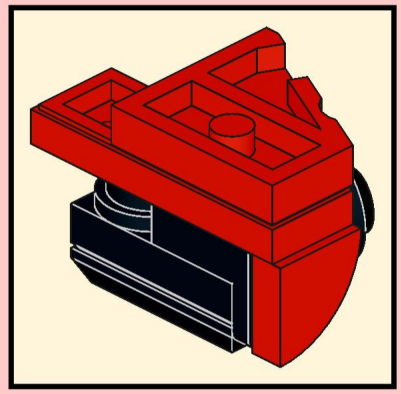

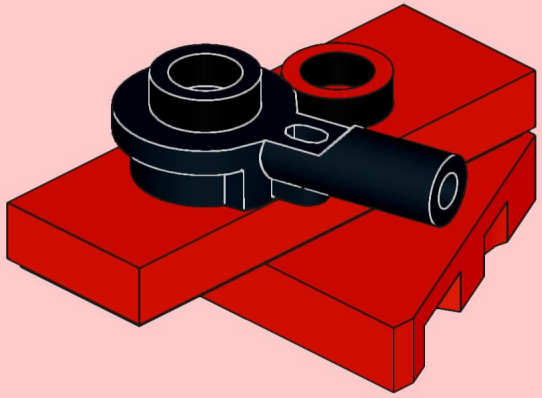

36

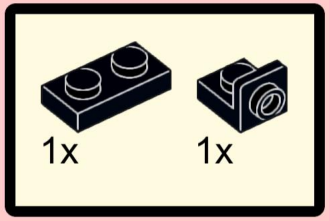

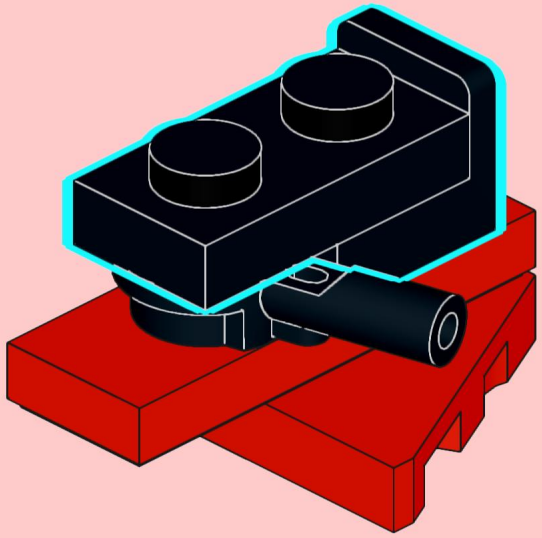

37

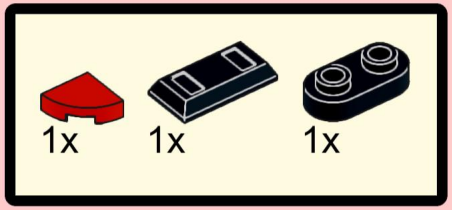

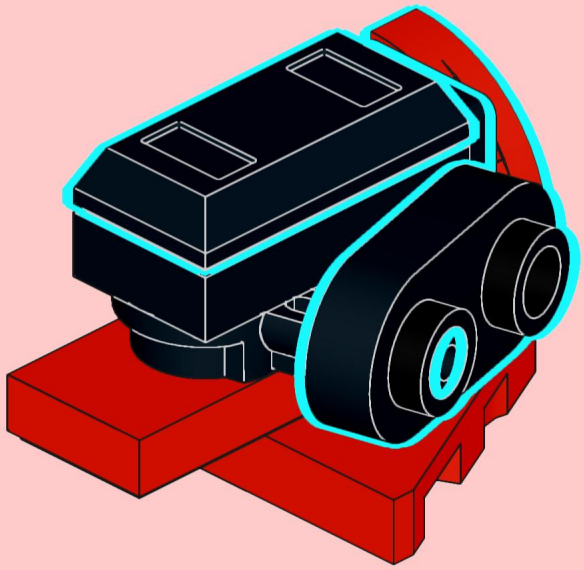

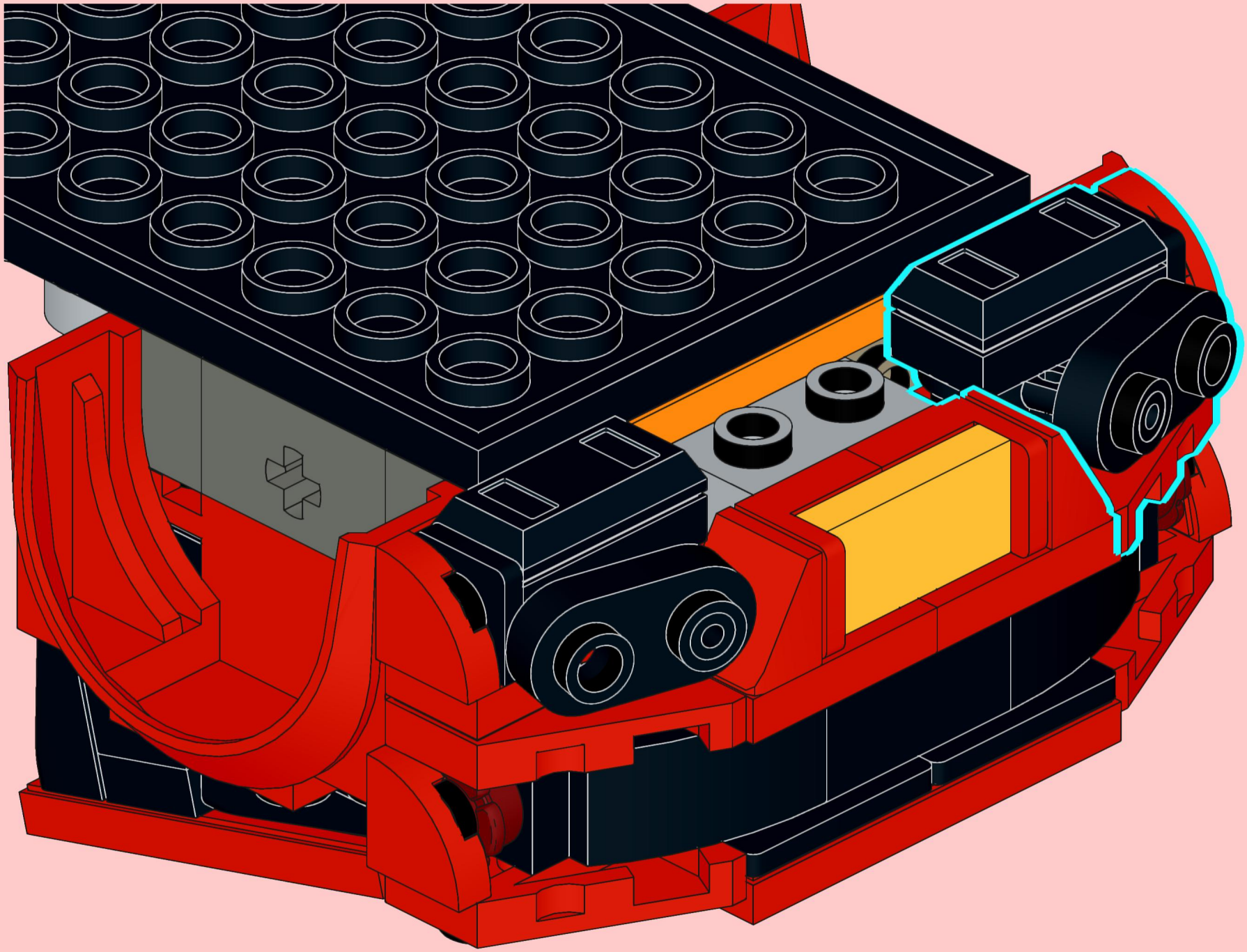

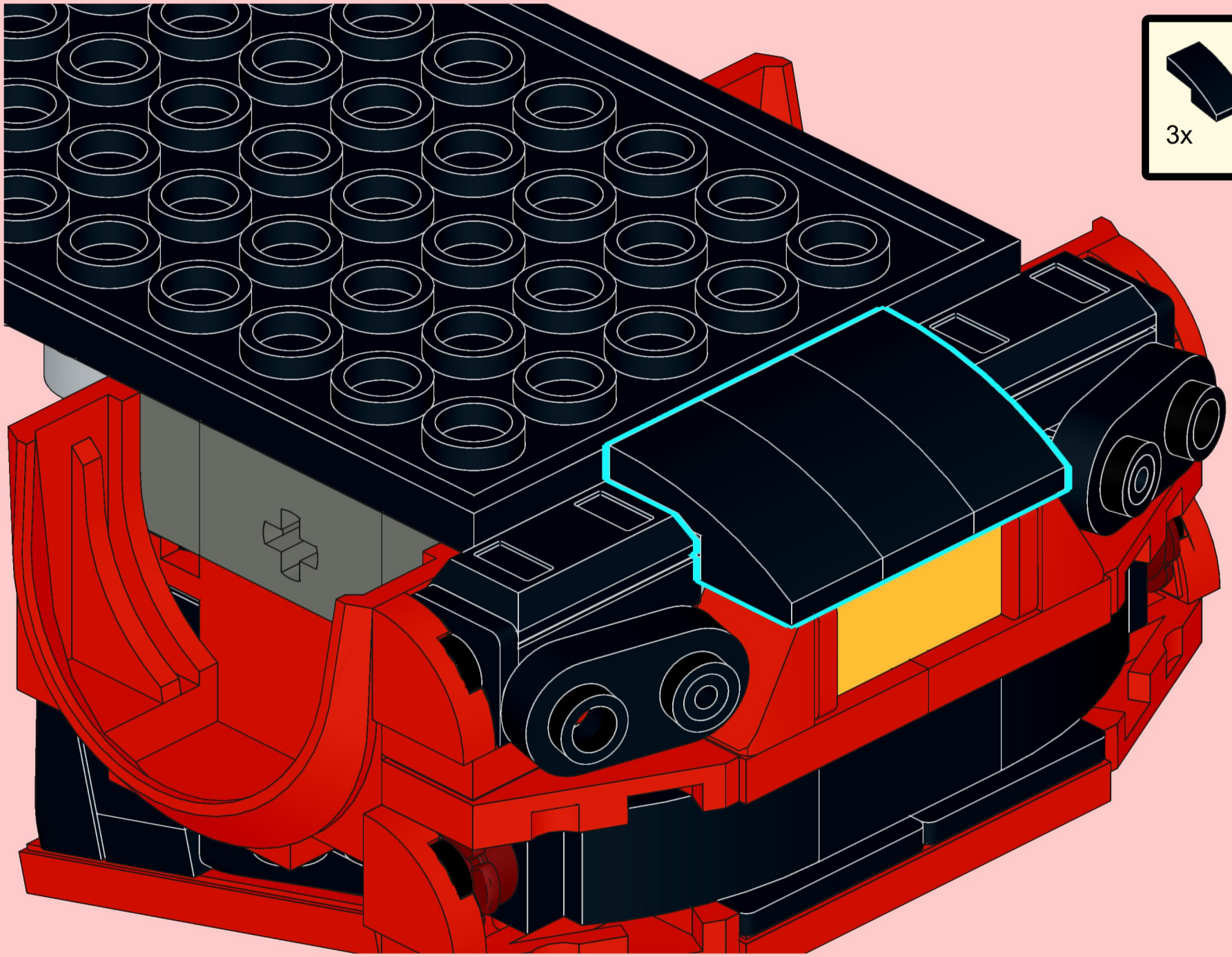

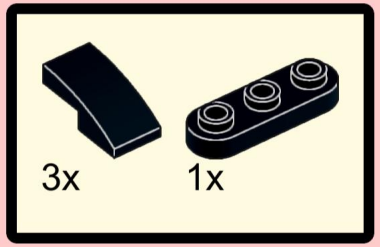
3x
1x

40

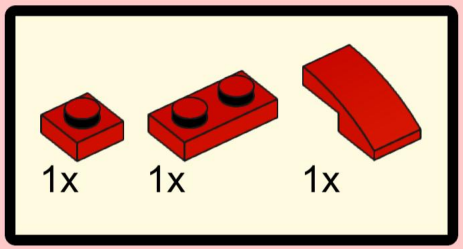

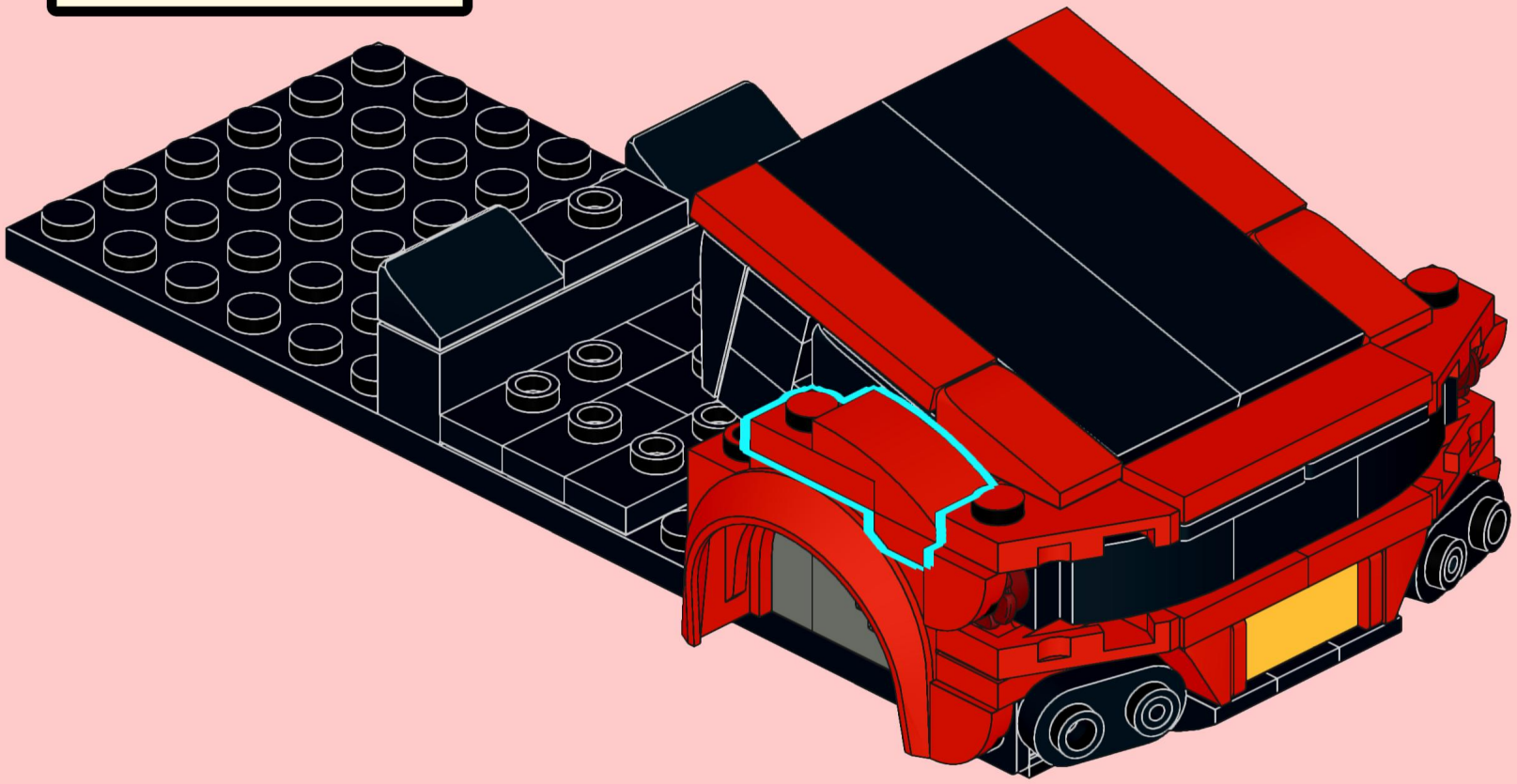

41

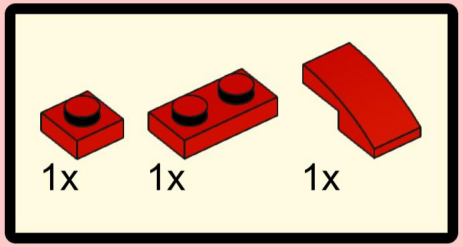

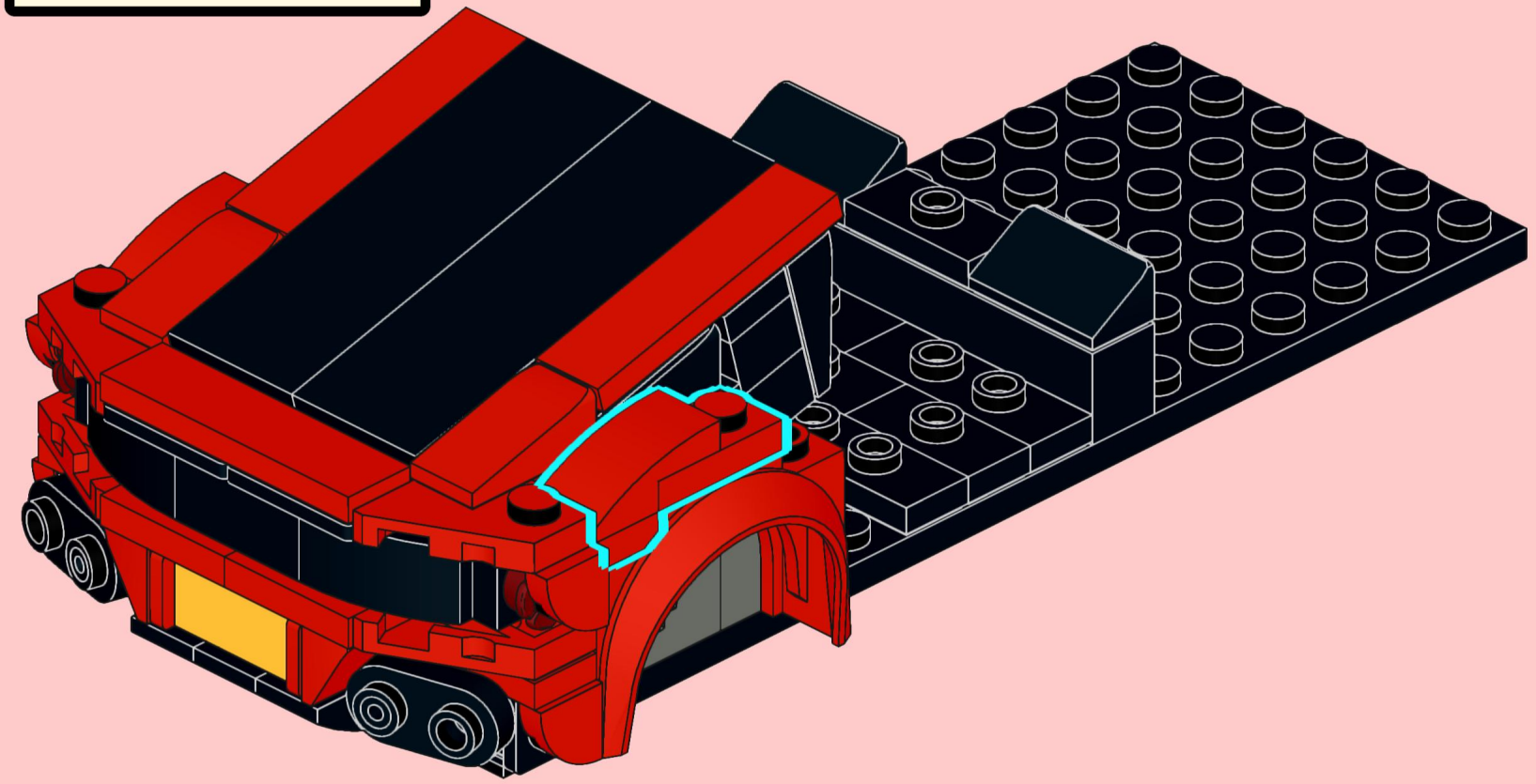

42

2x

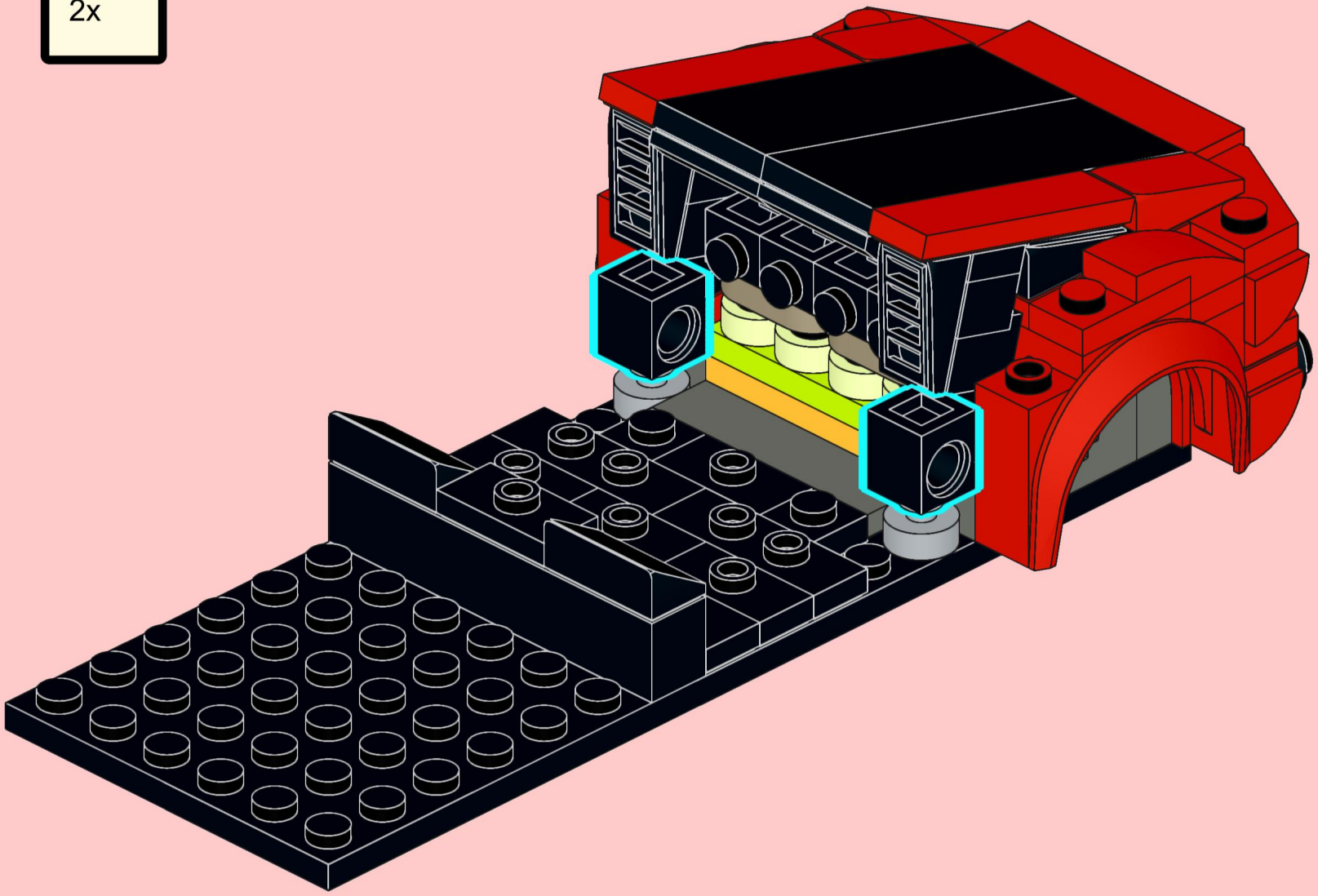

43

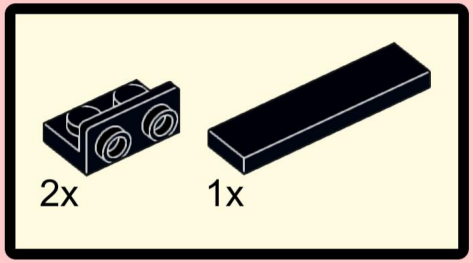

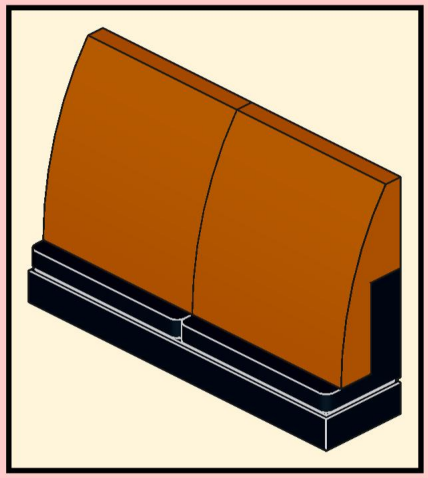

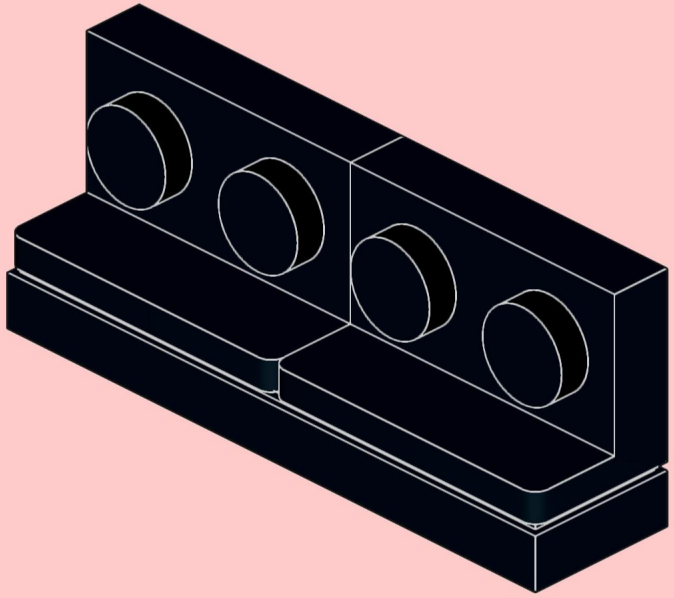

44

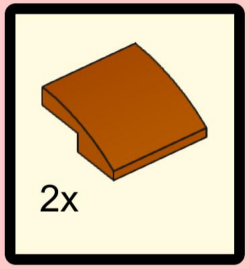

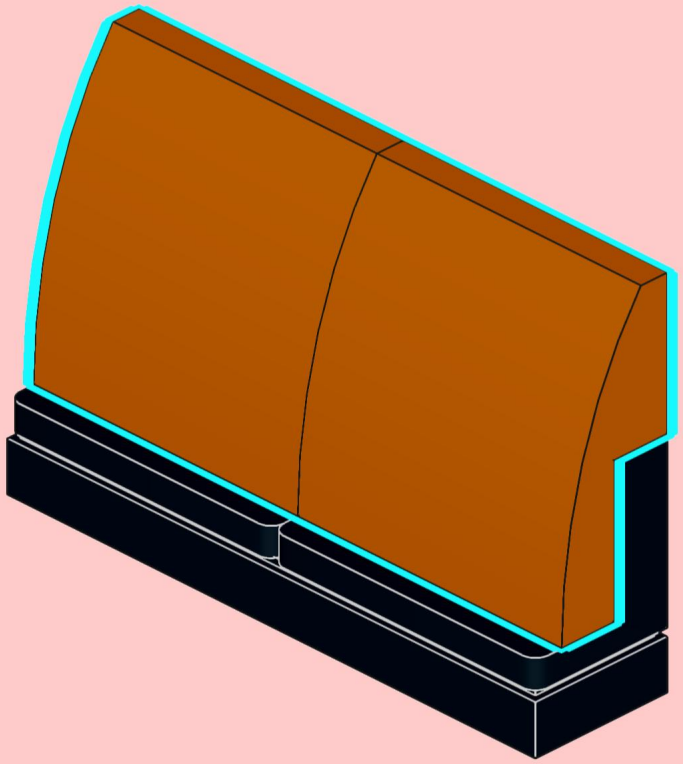

45

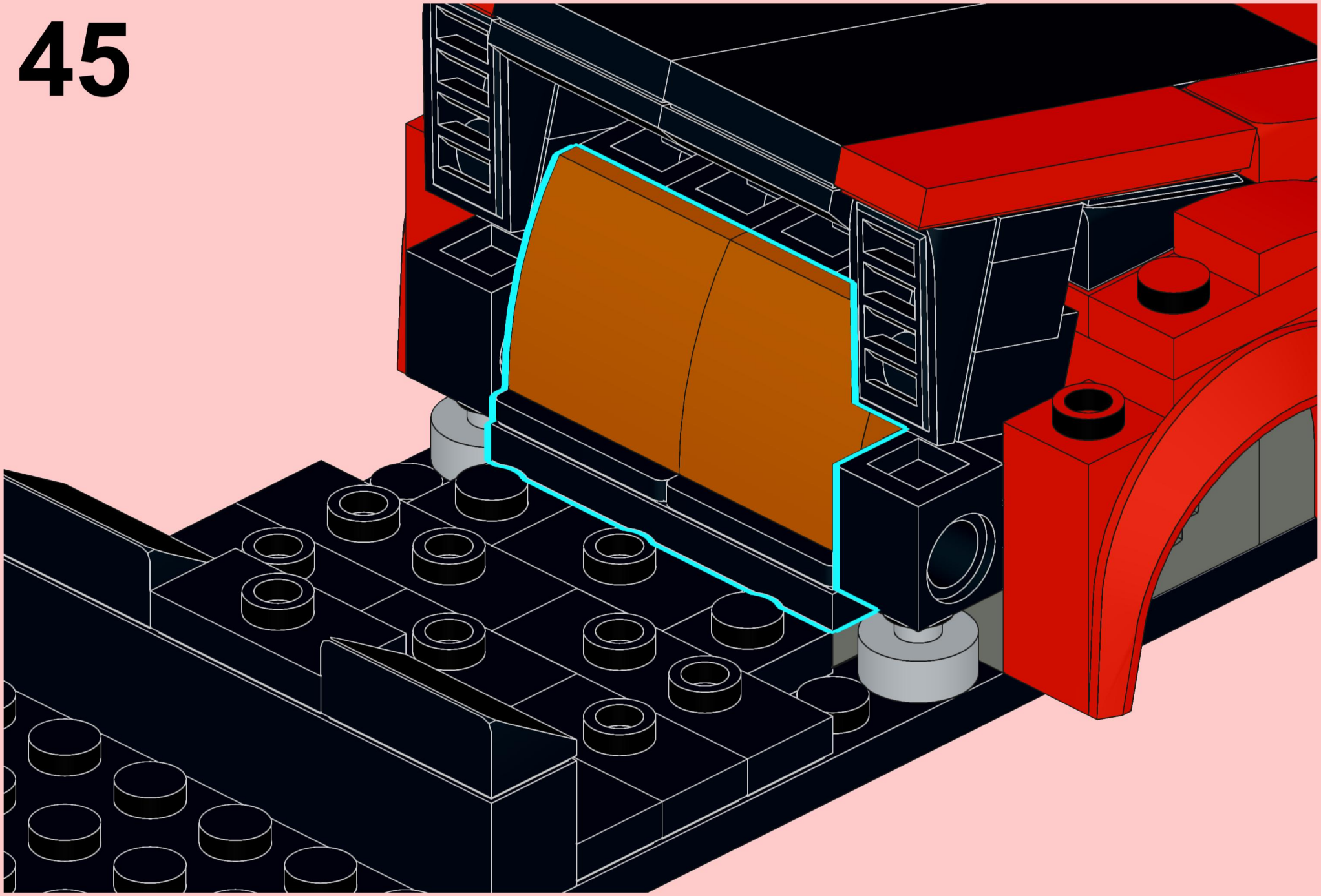

46

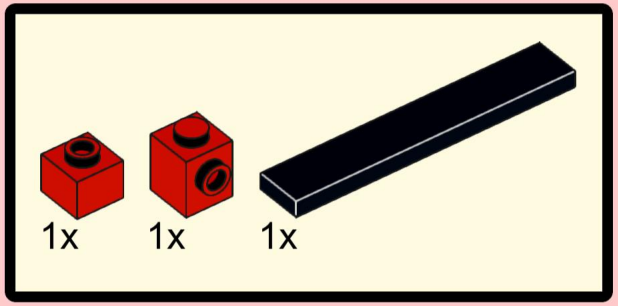

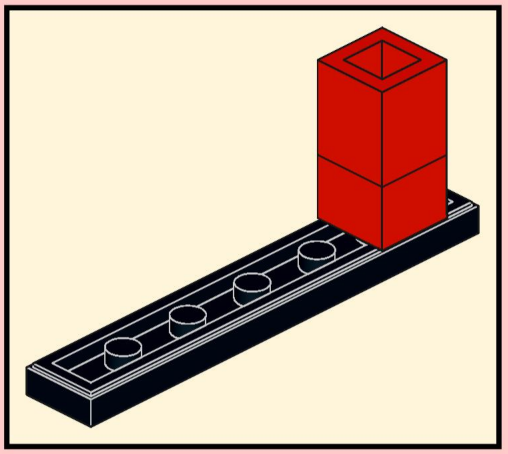

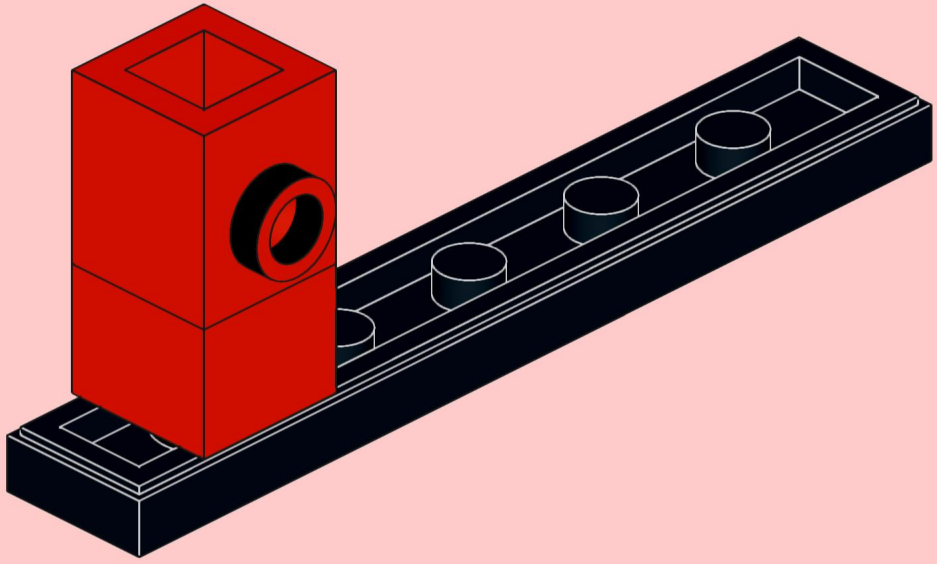

47

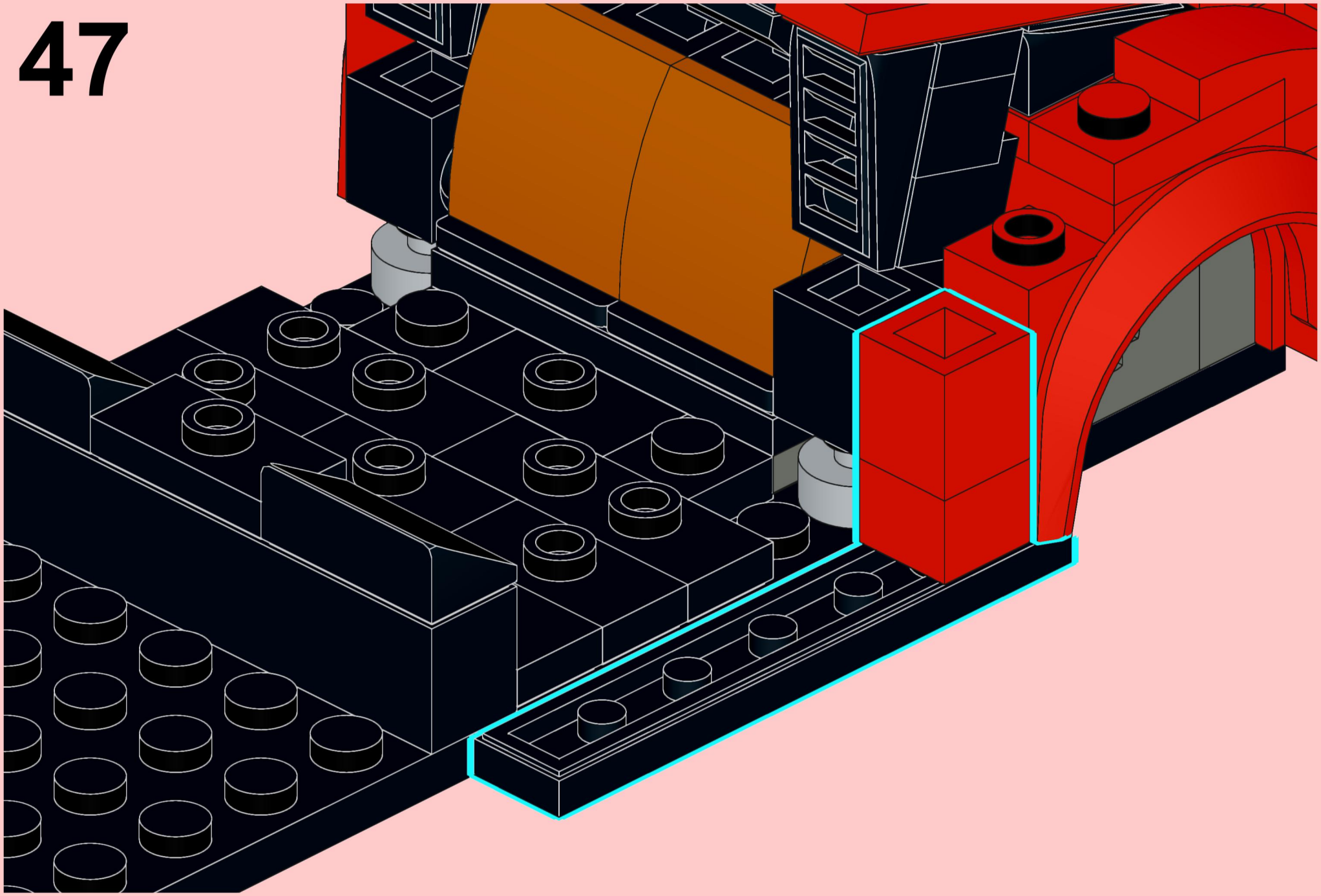

48

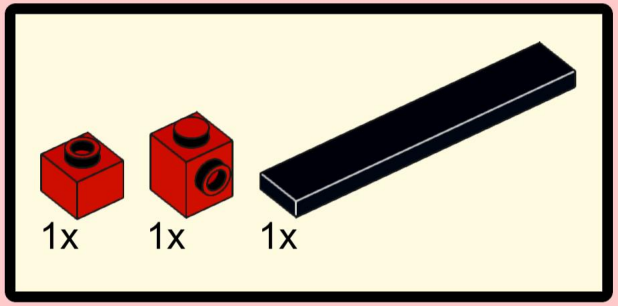

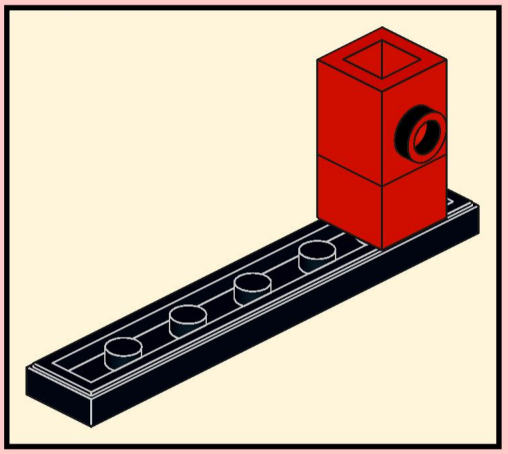

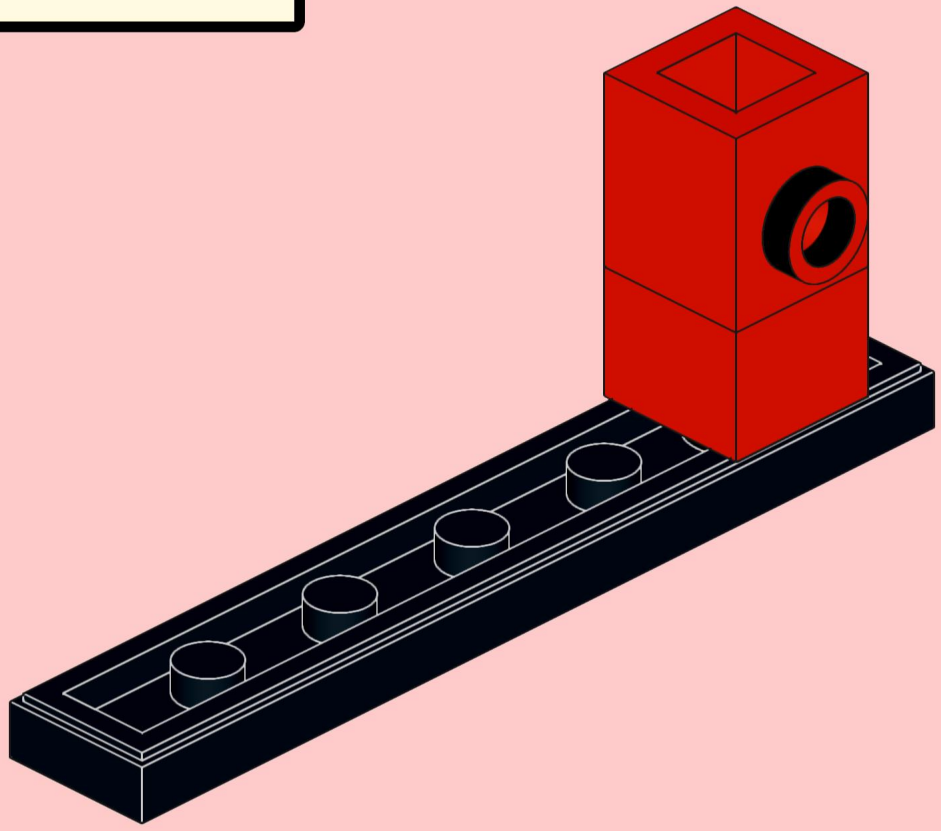

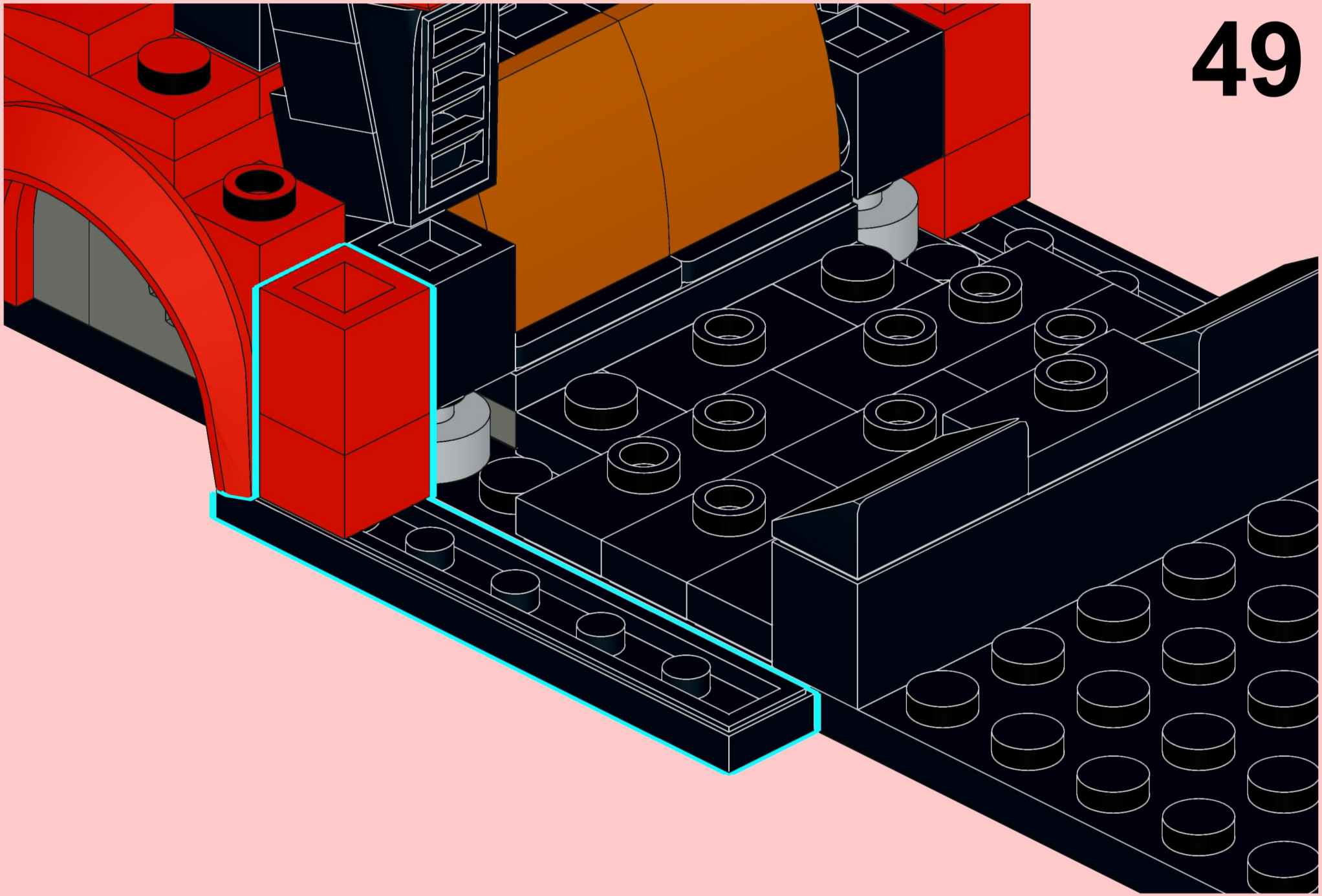
49

50

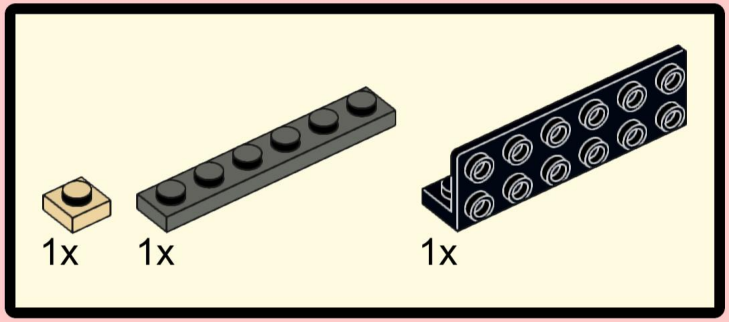

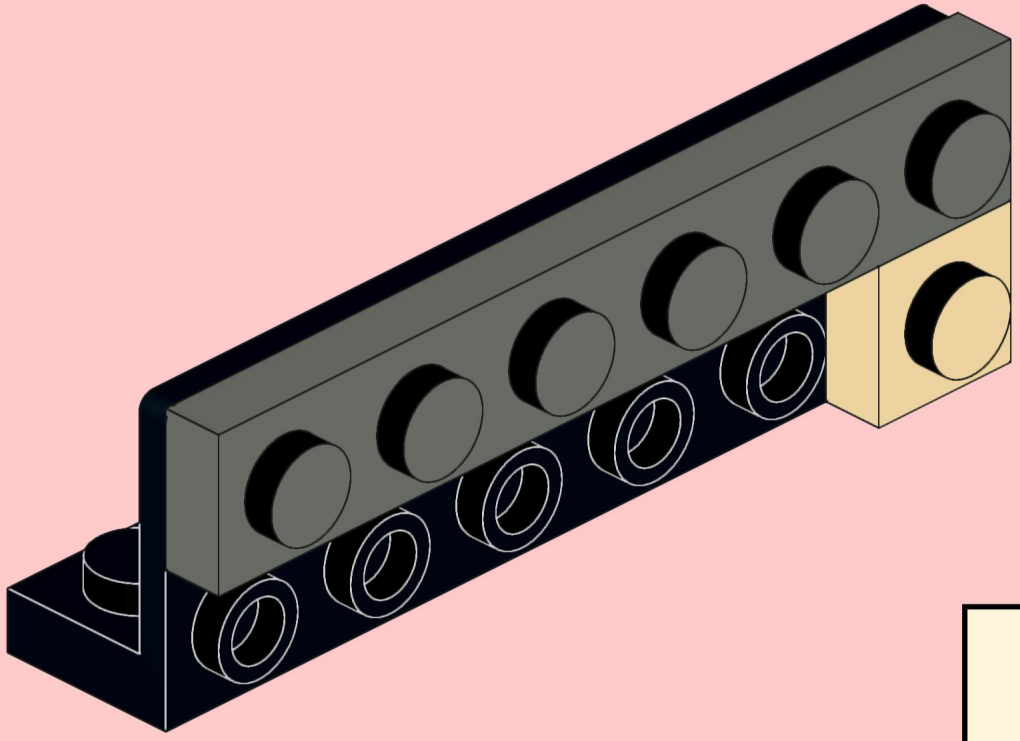

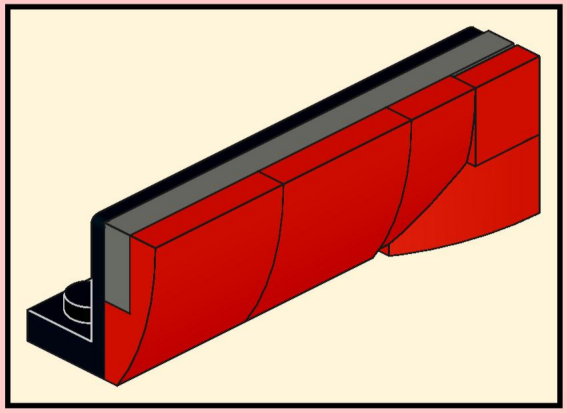

51

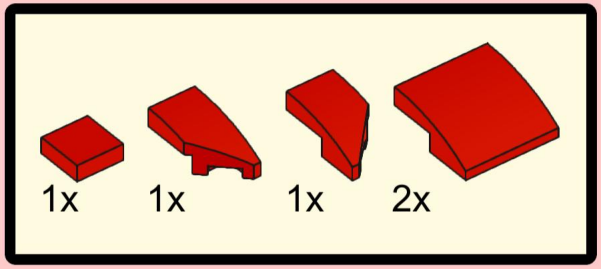

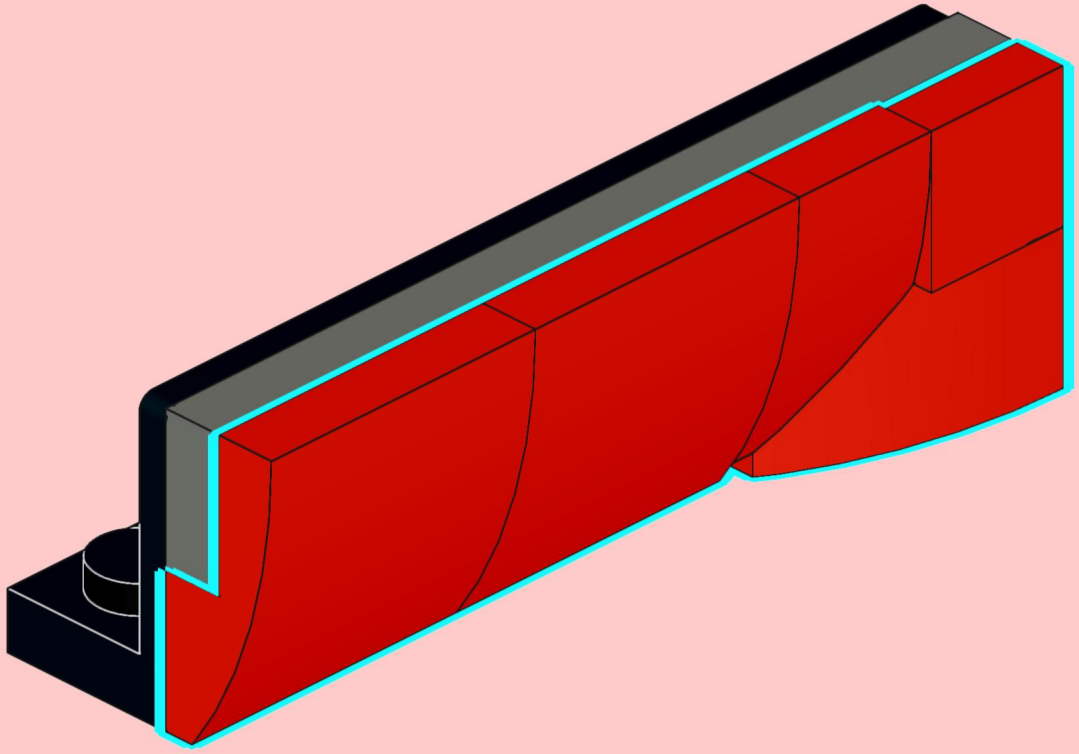

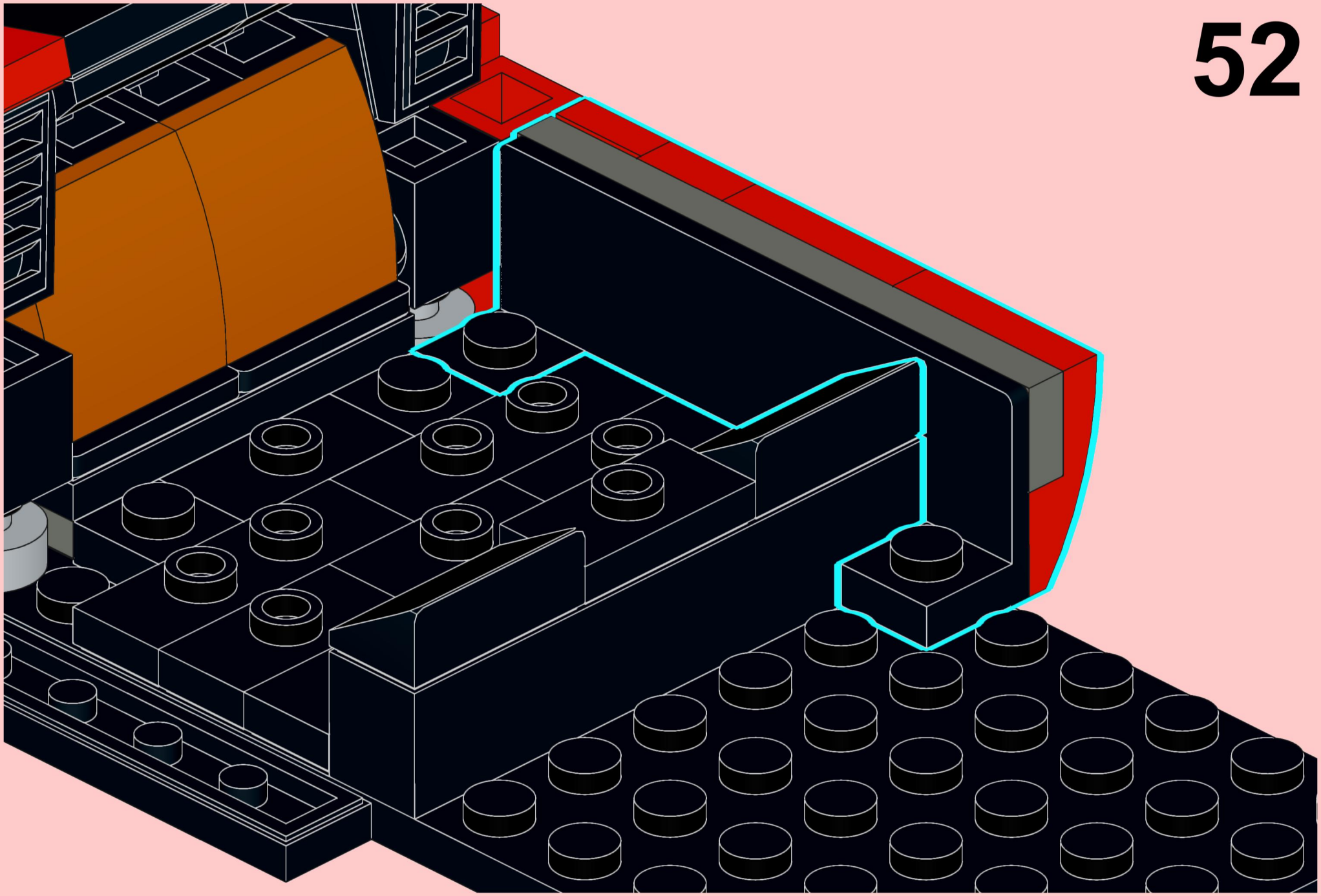

53

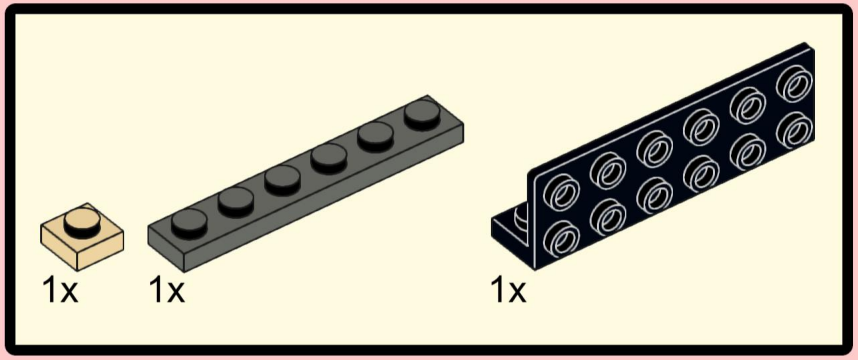

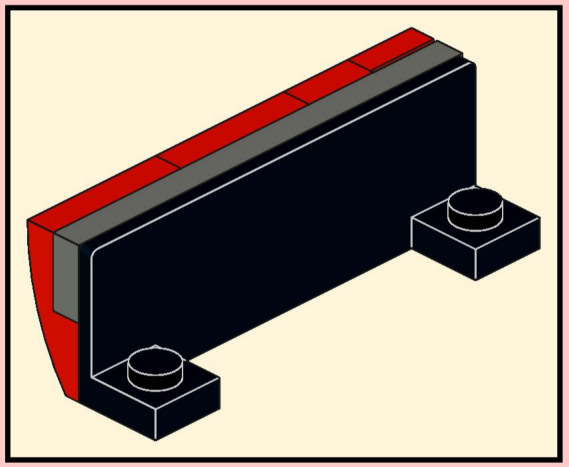

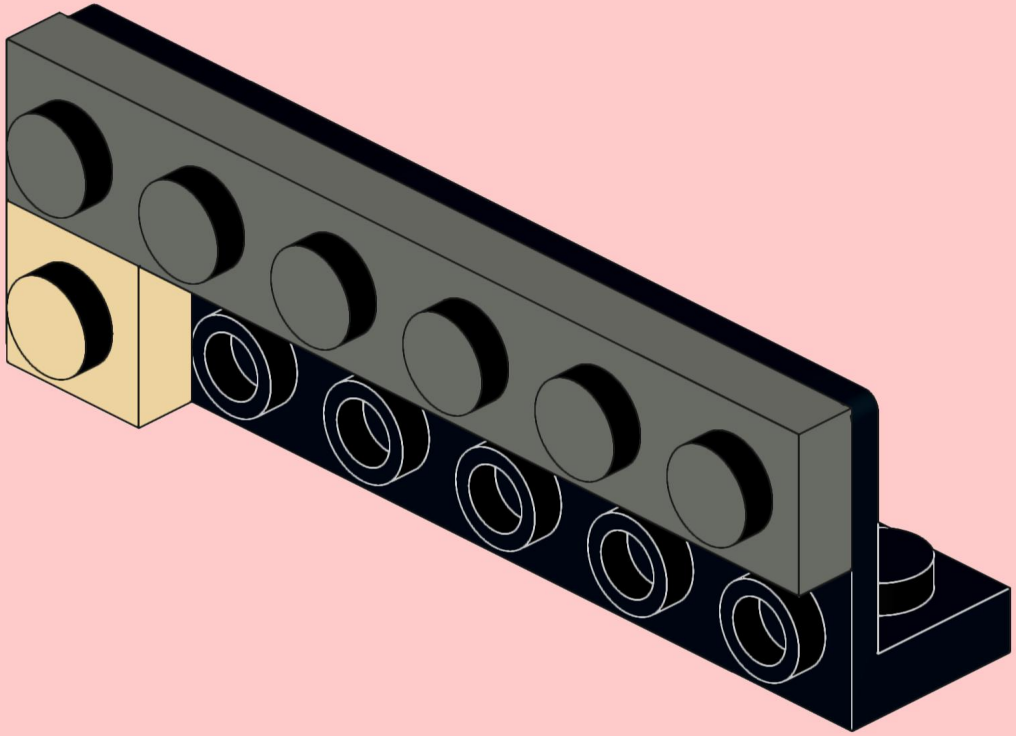

54

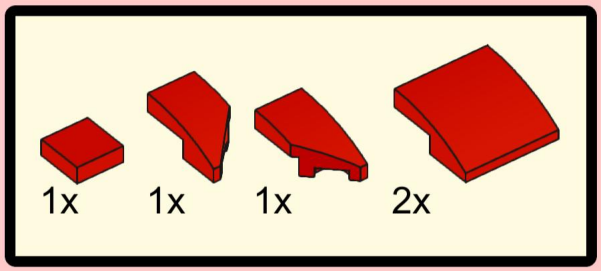

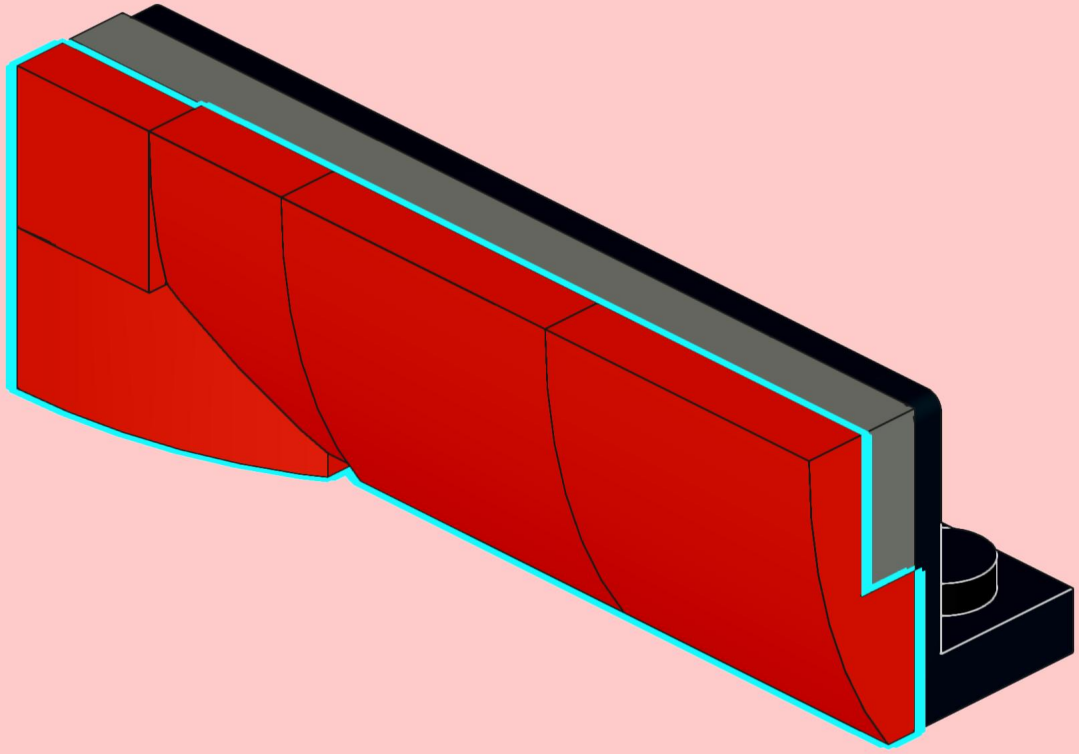

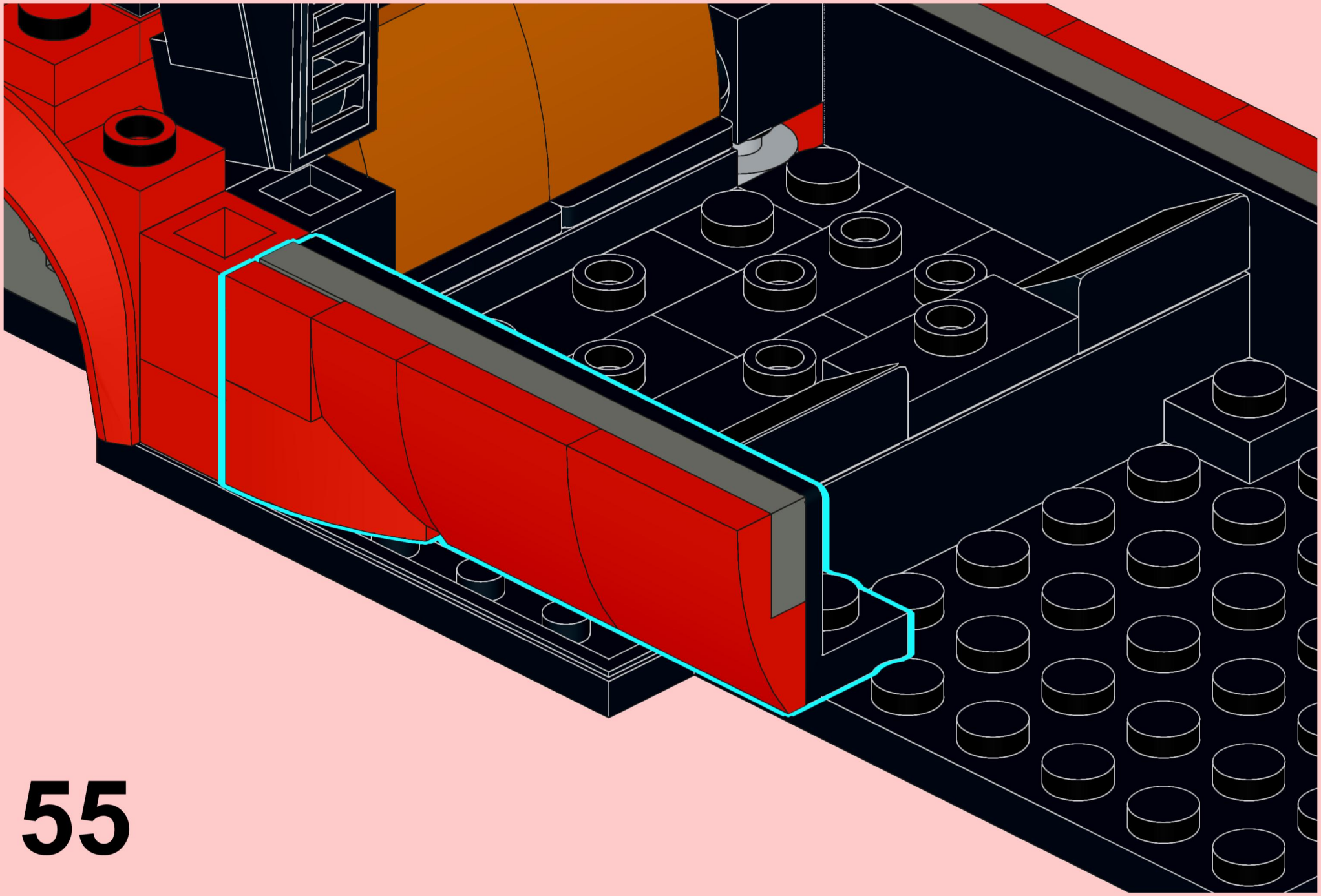

55

56

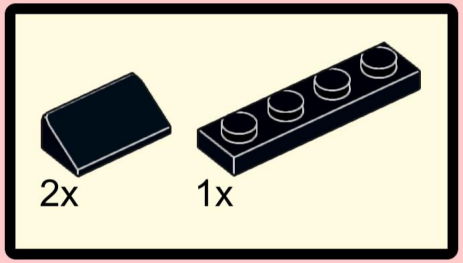

57

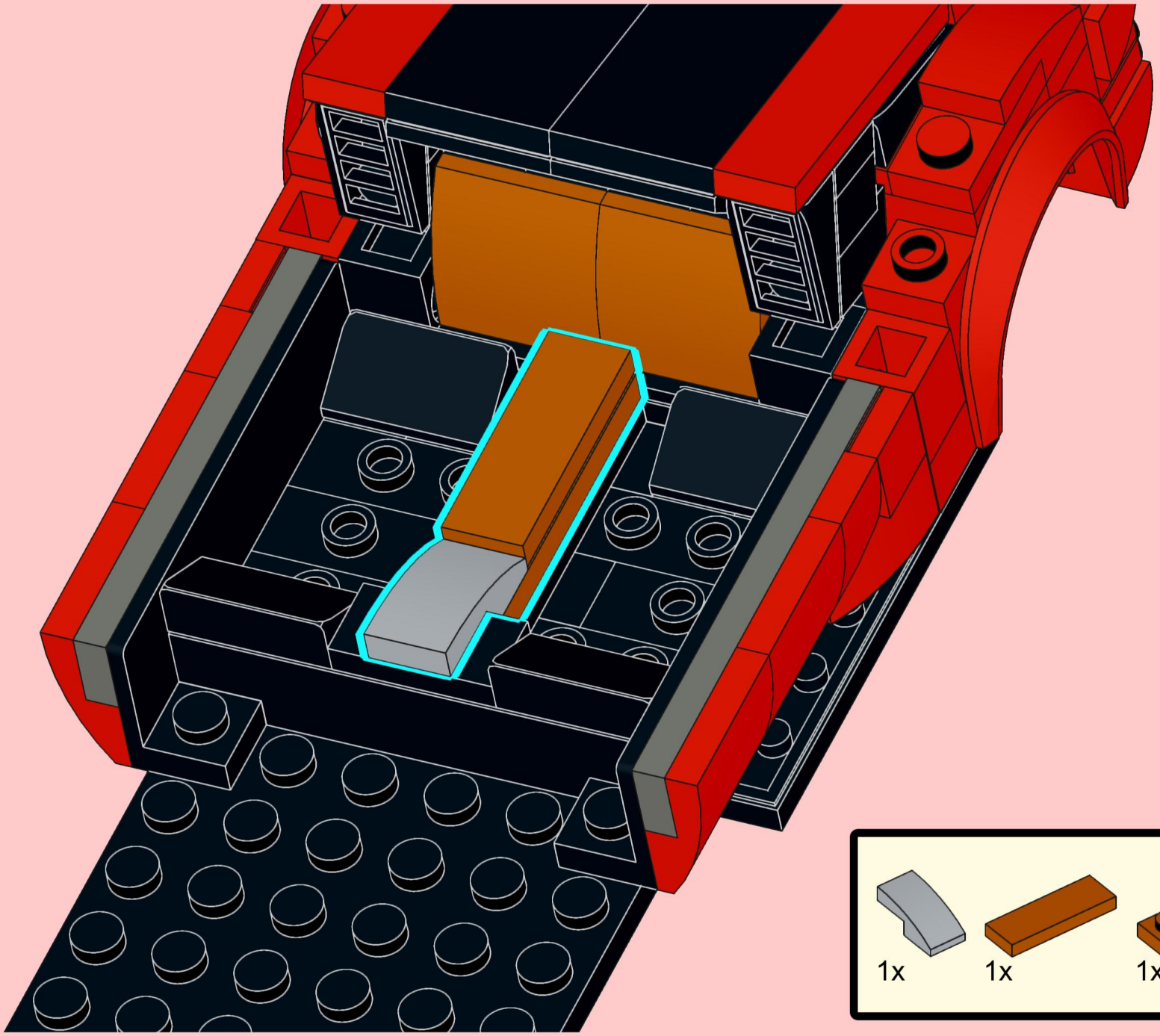

58

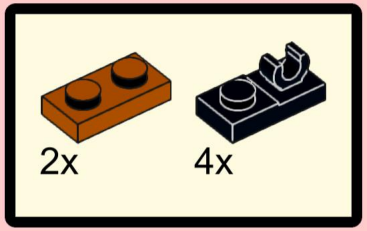



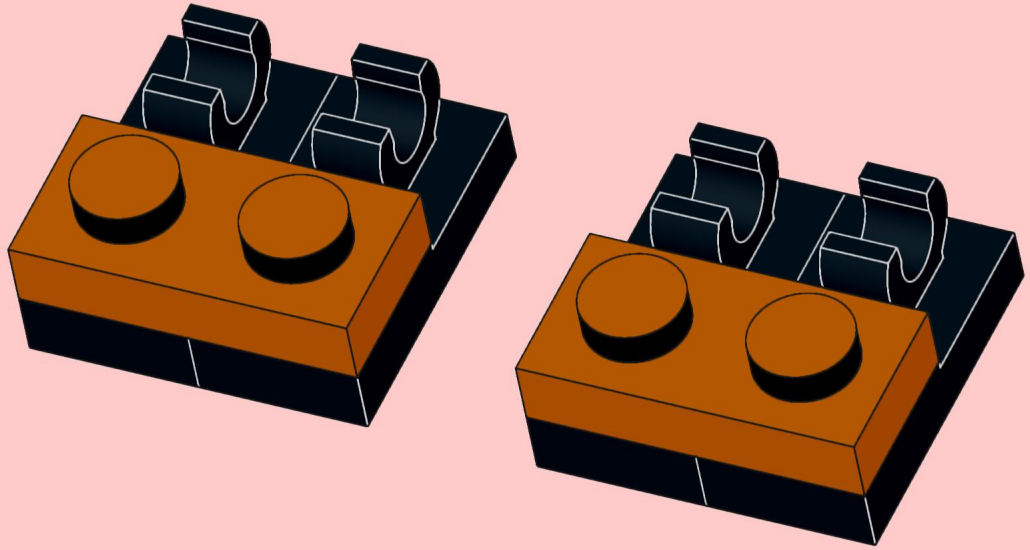

59

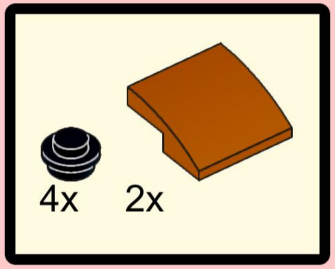

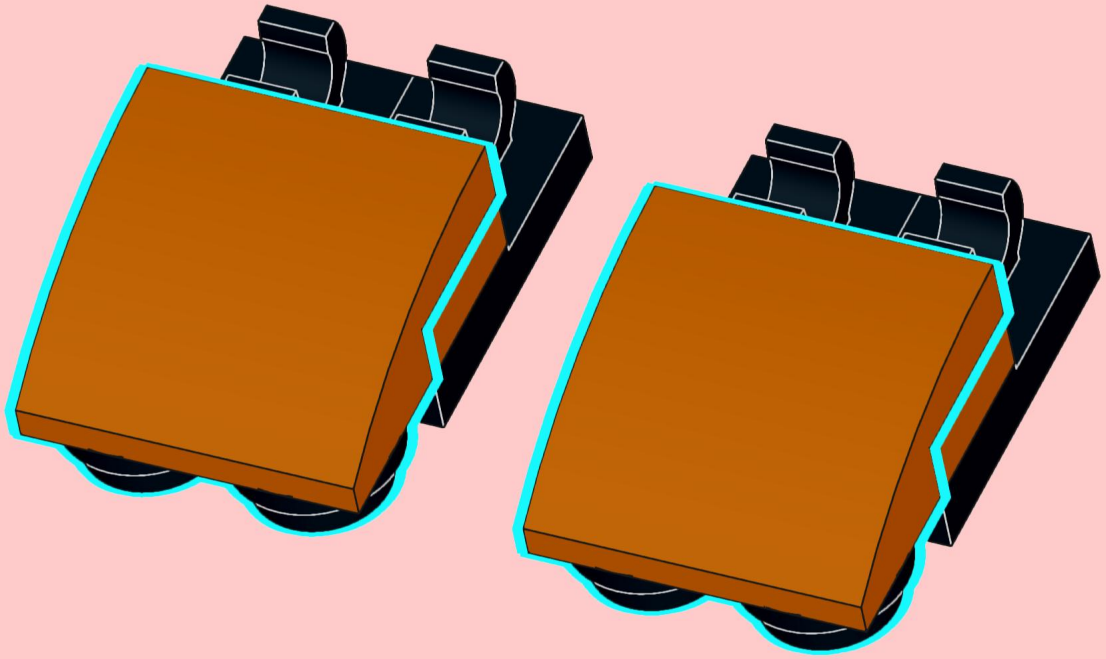

60

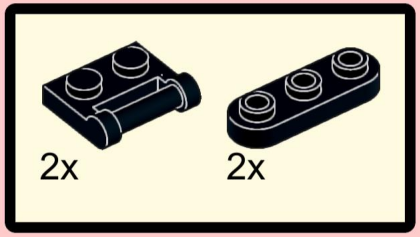



61

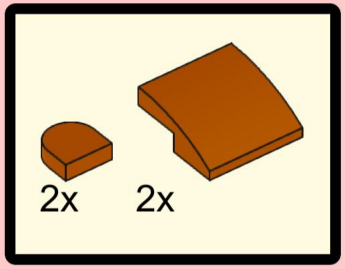



62

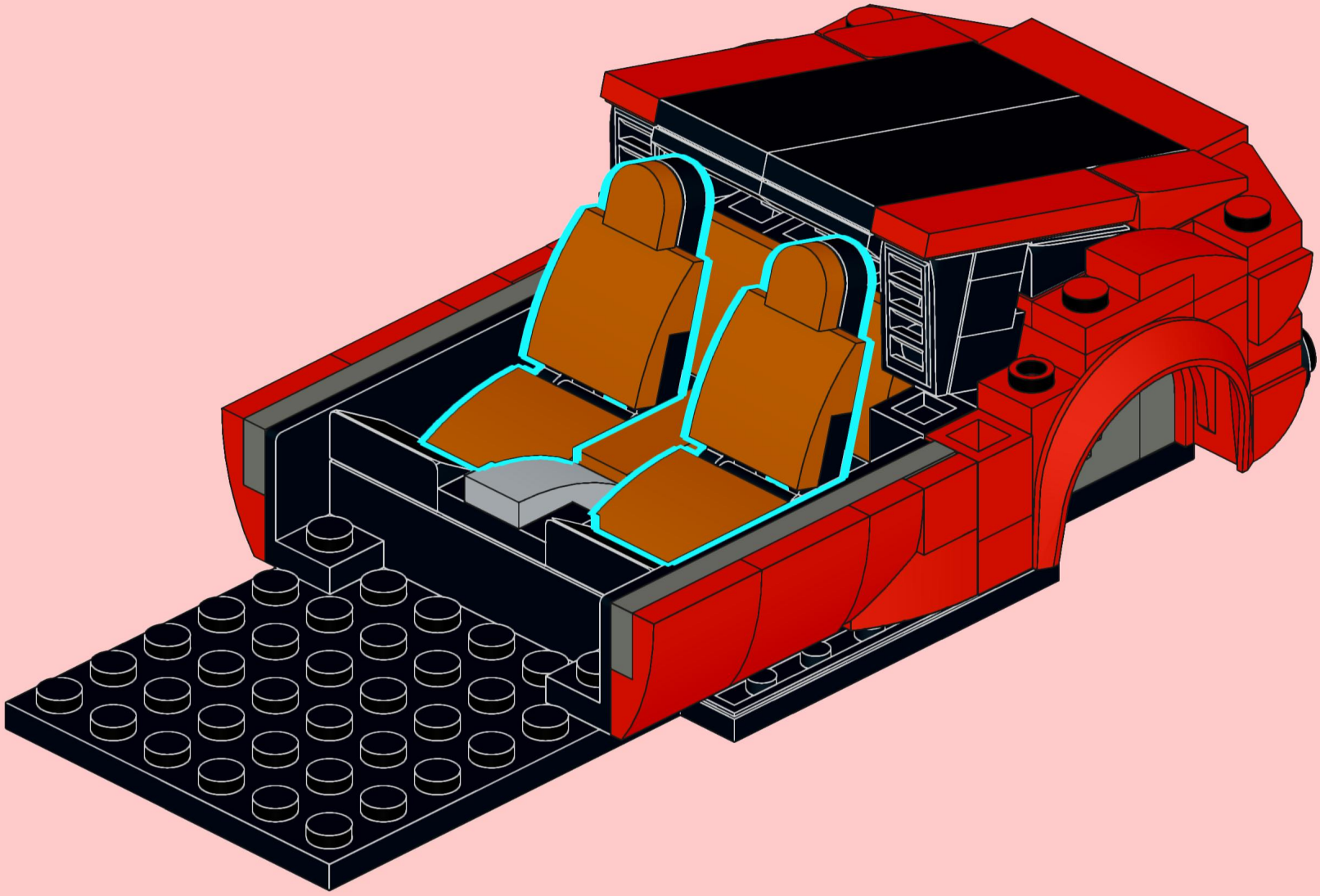

63

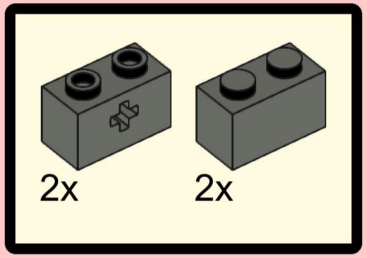

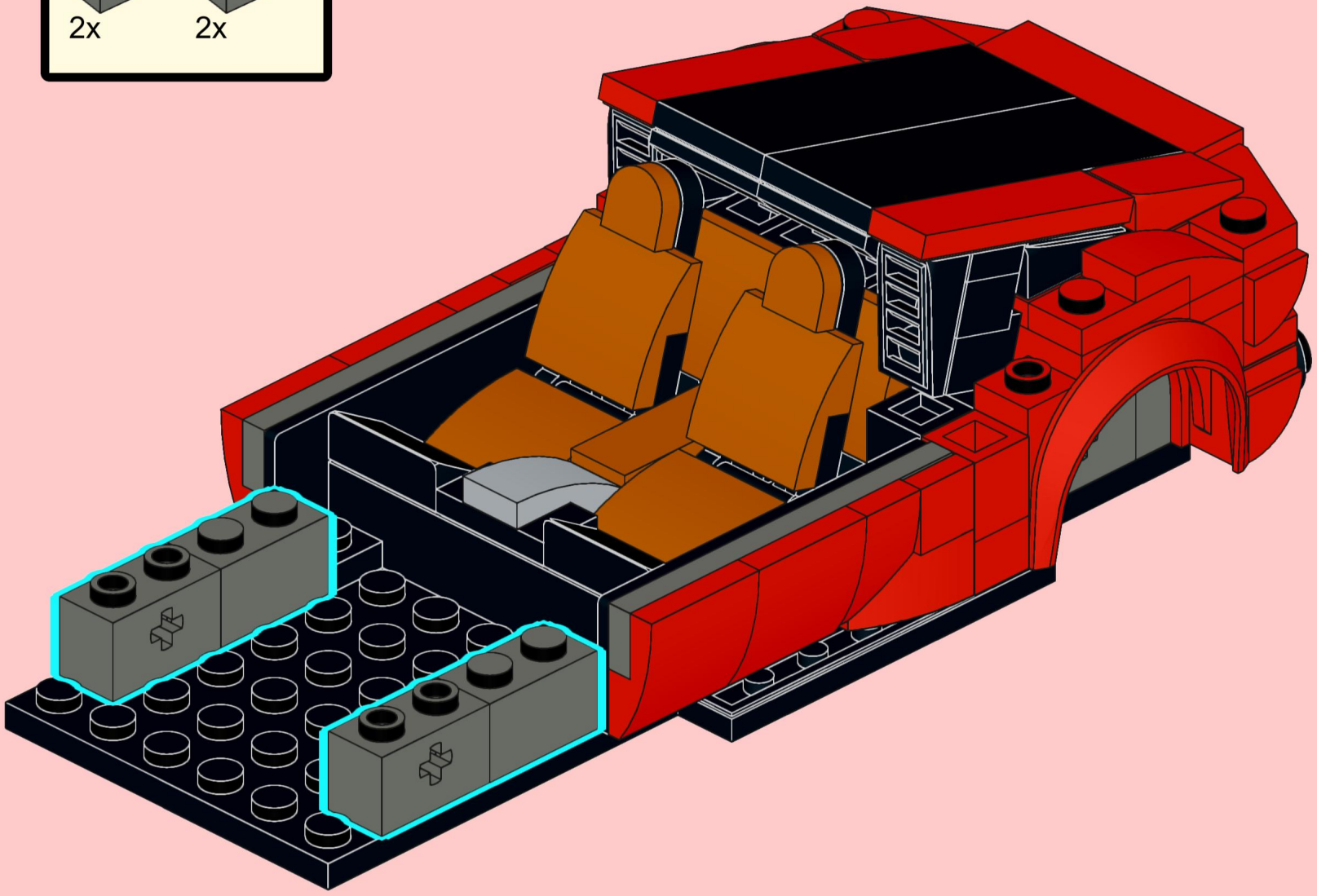

64

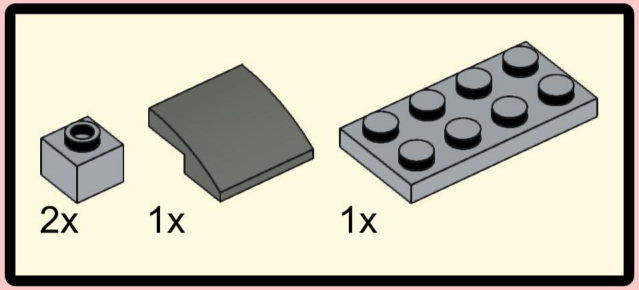

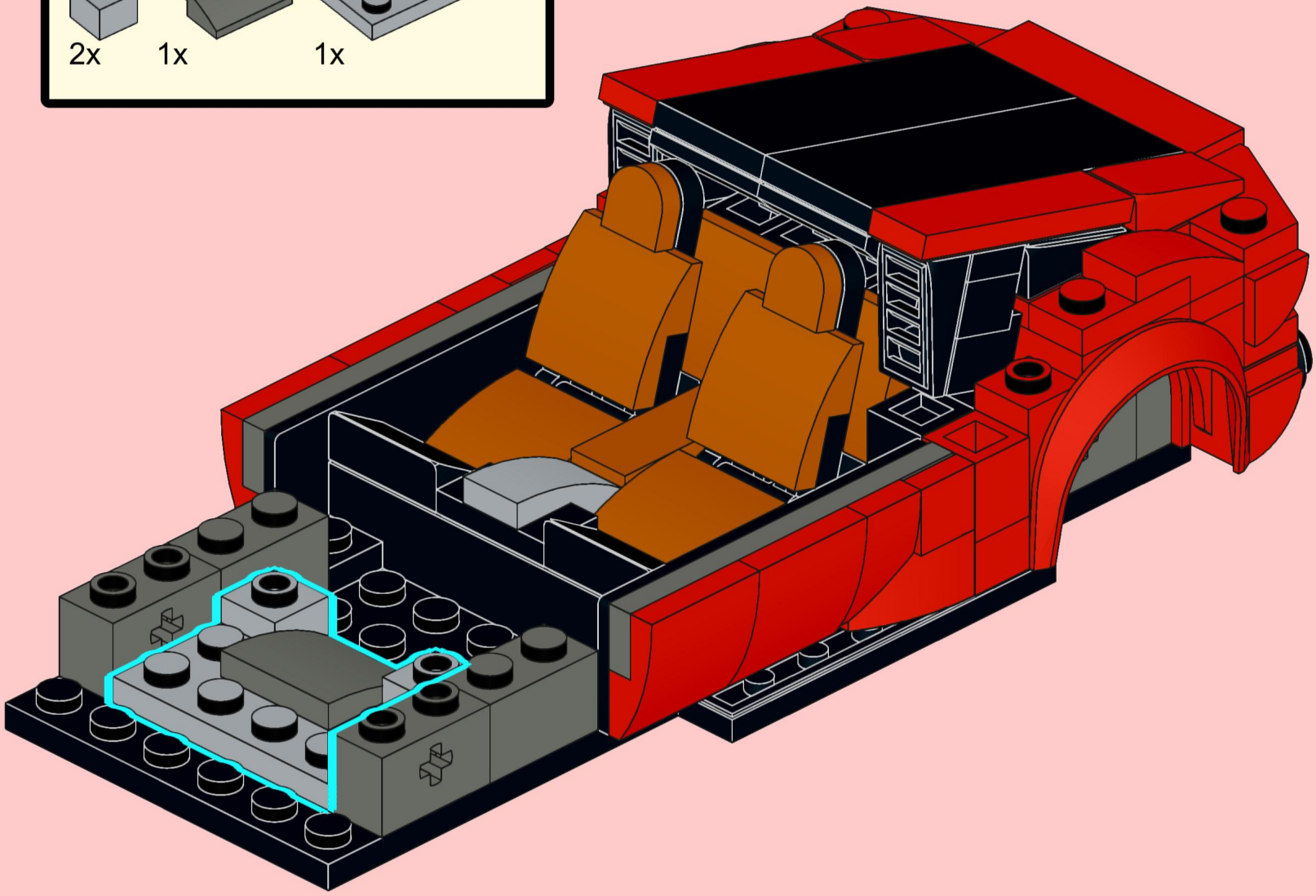

65

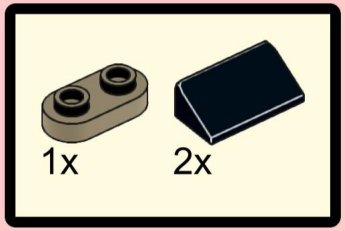

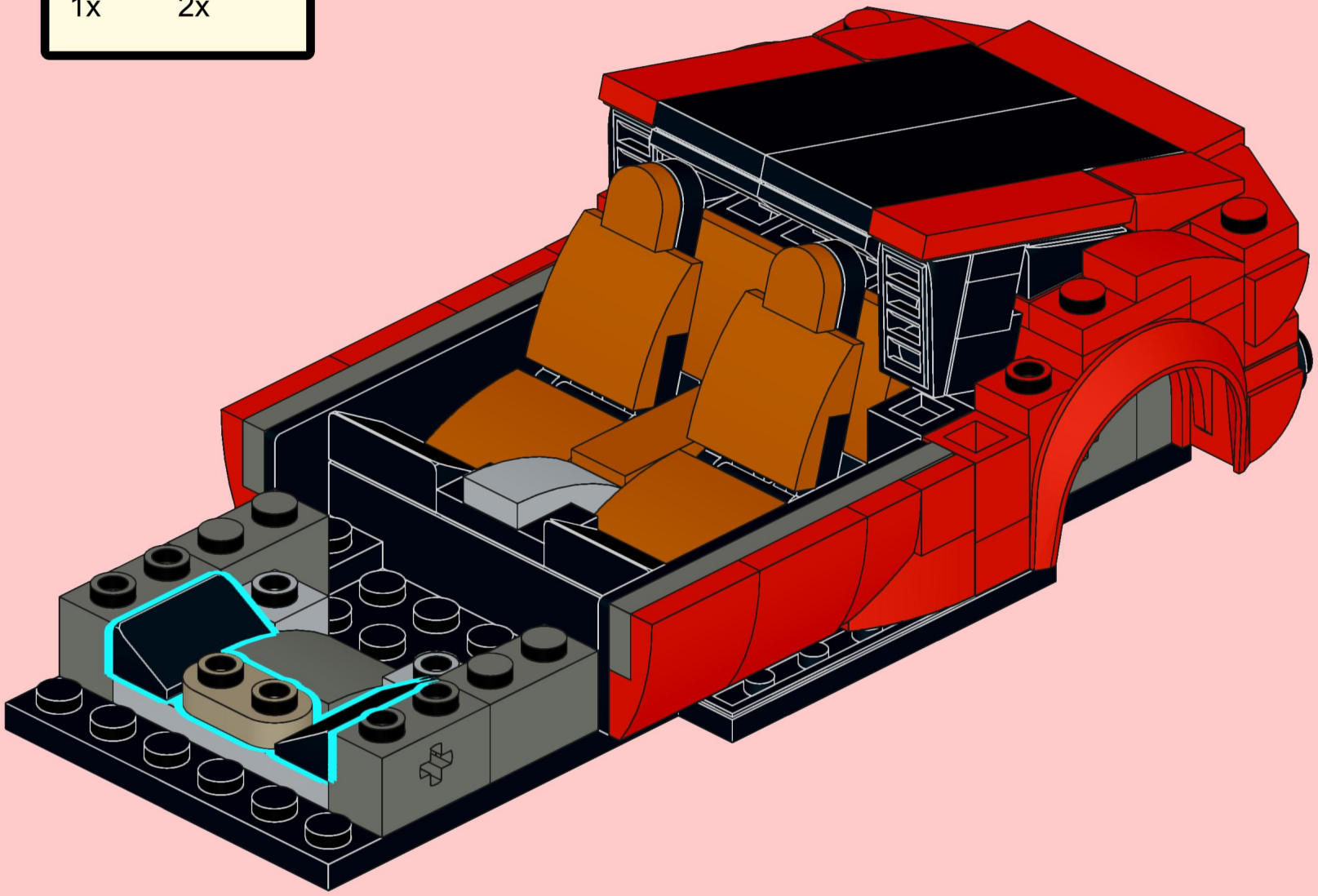

66

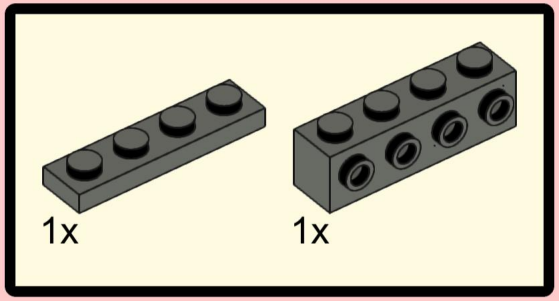

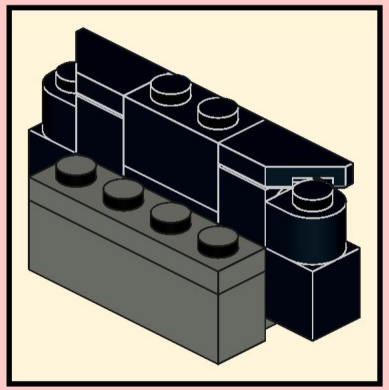

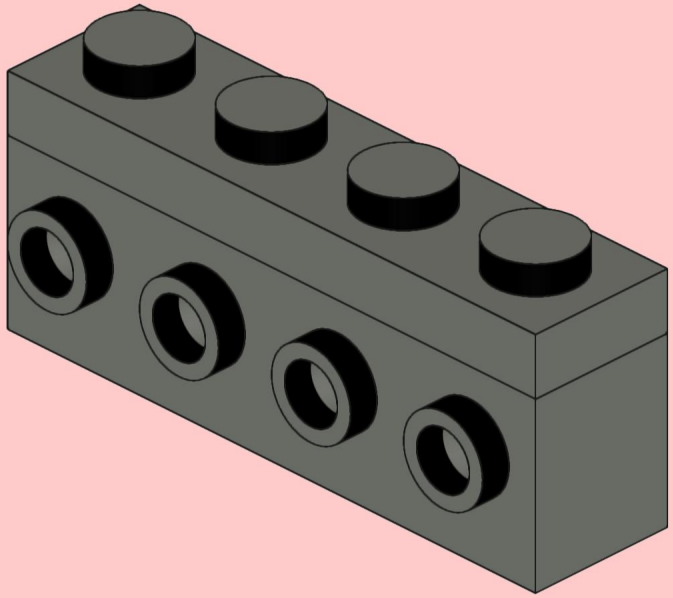

67

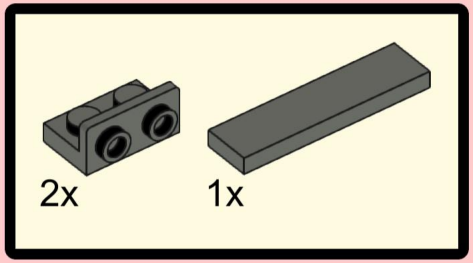

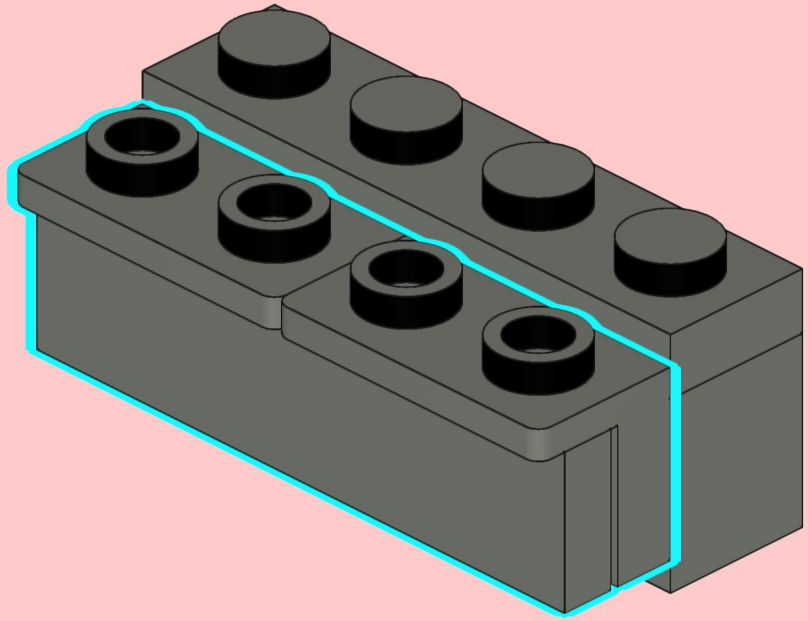

68

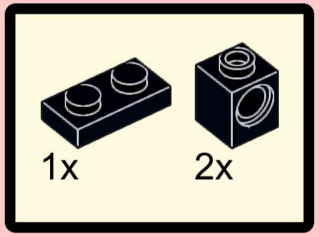

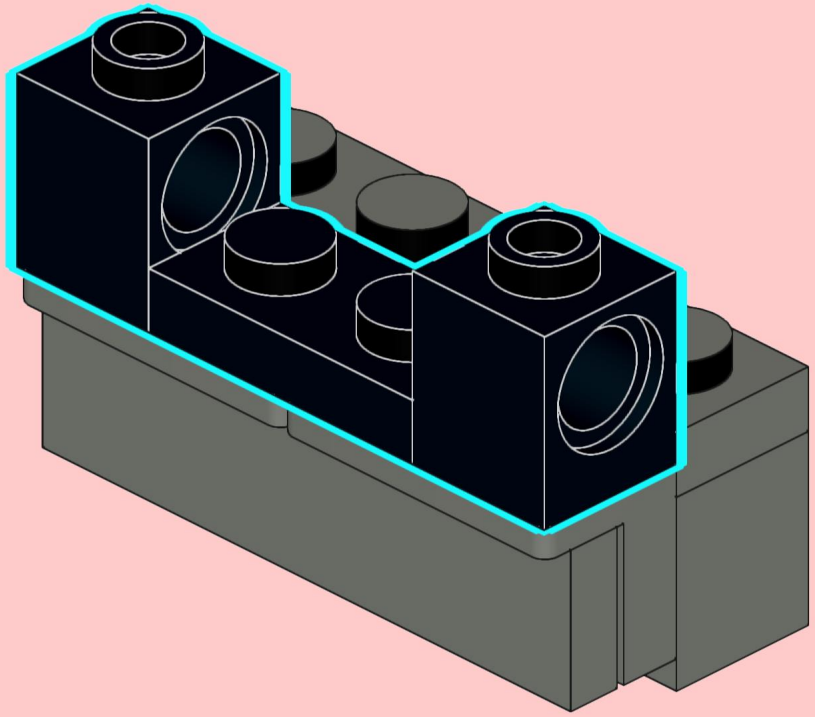

69

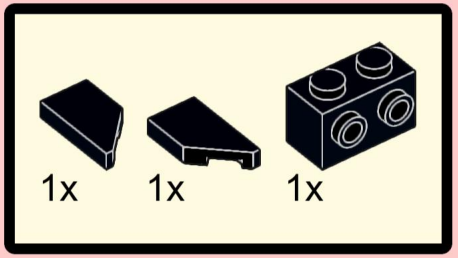

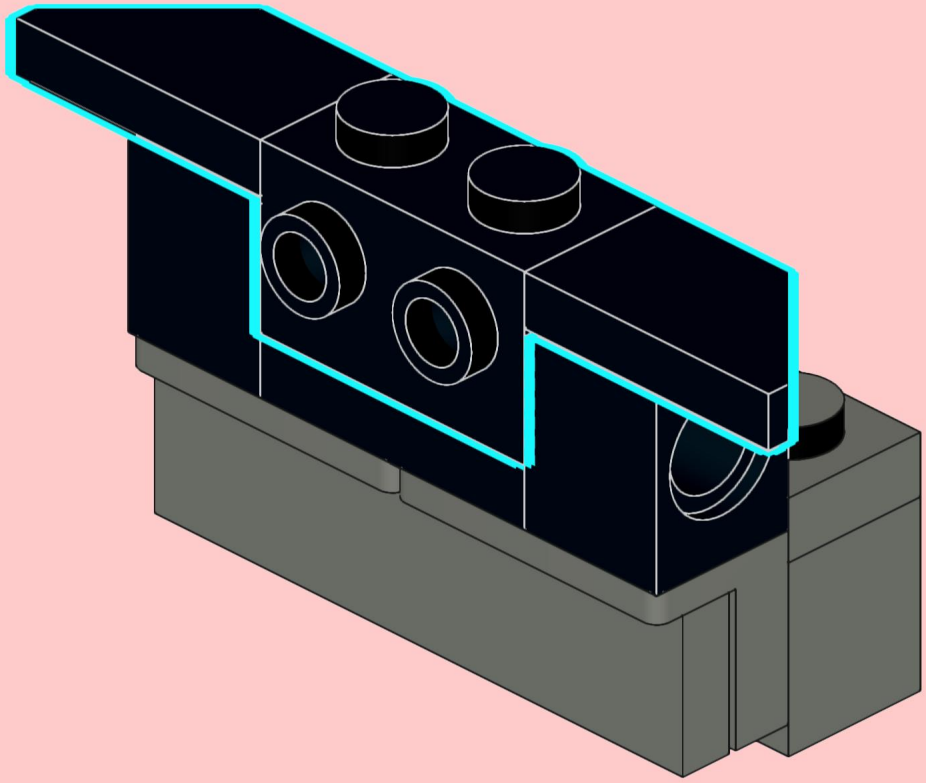

70

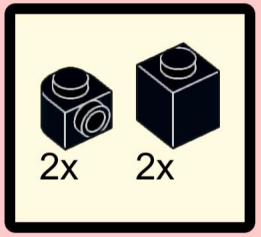

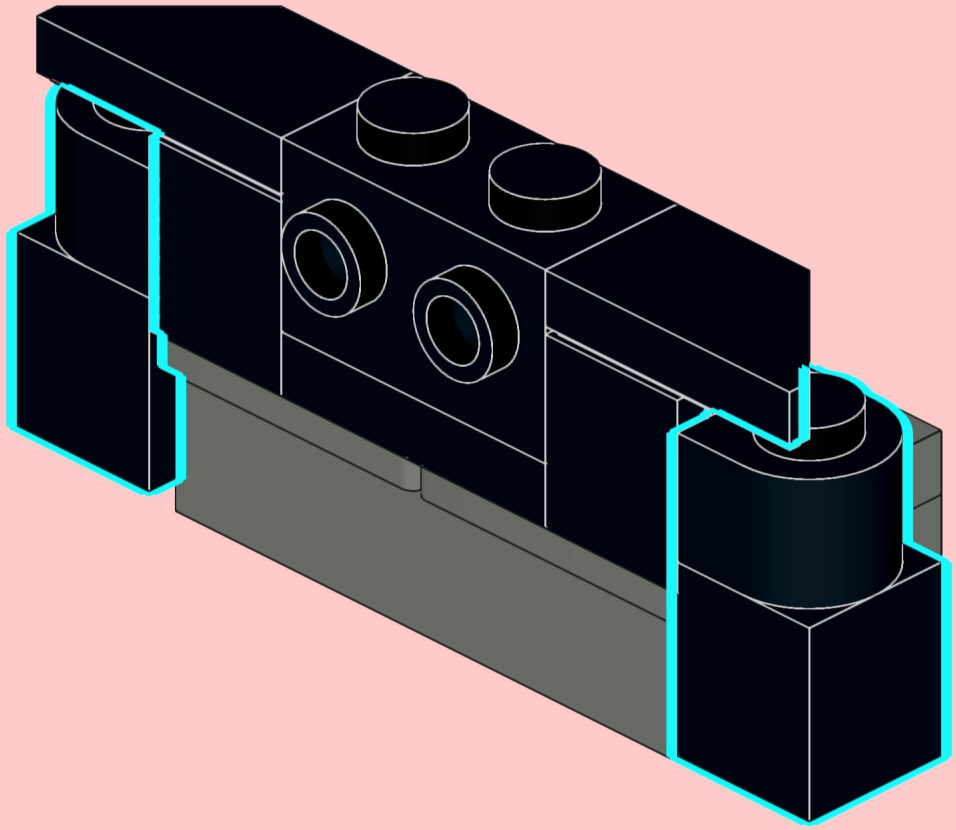

71

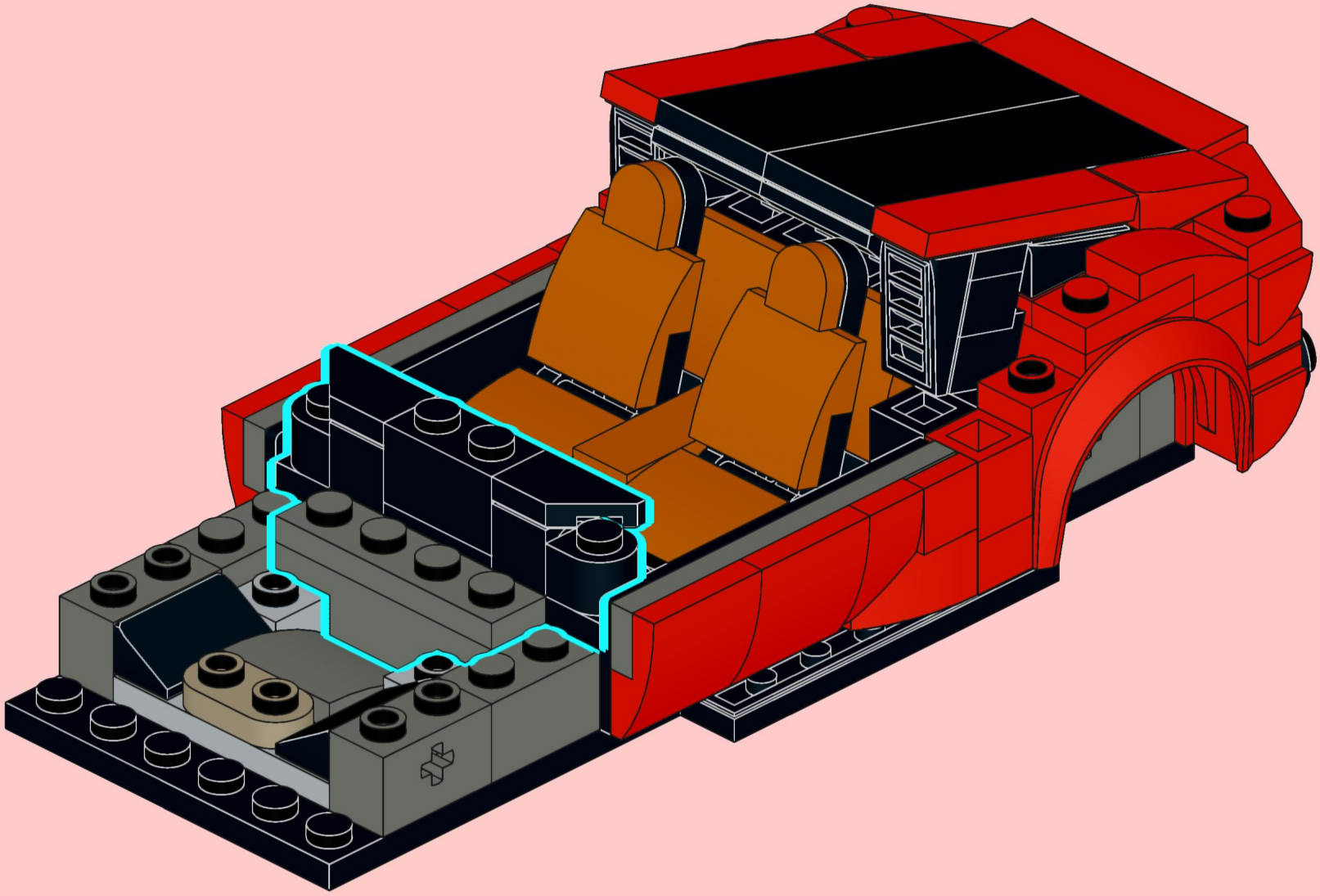

72

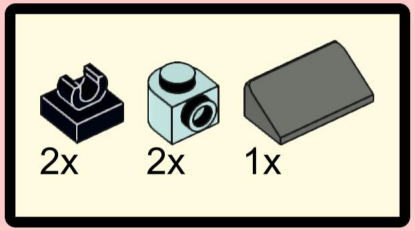

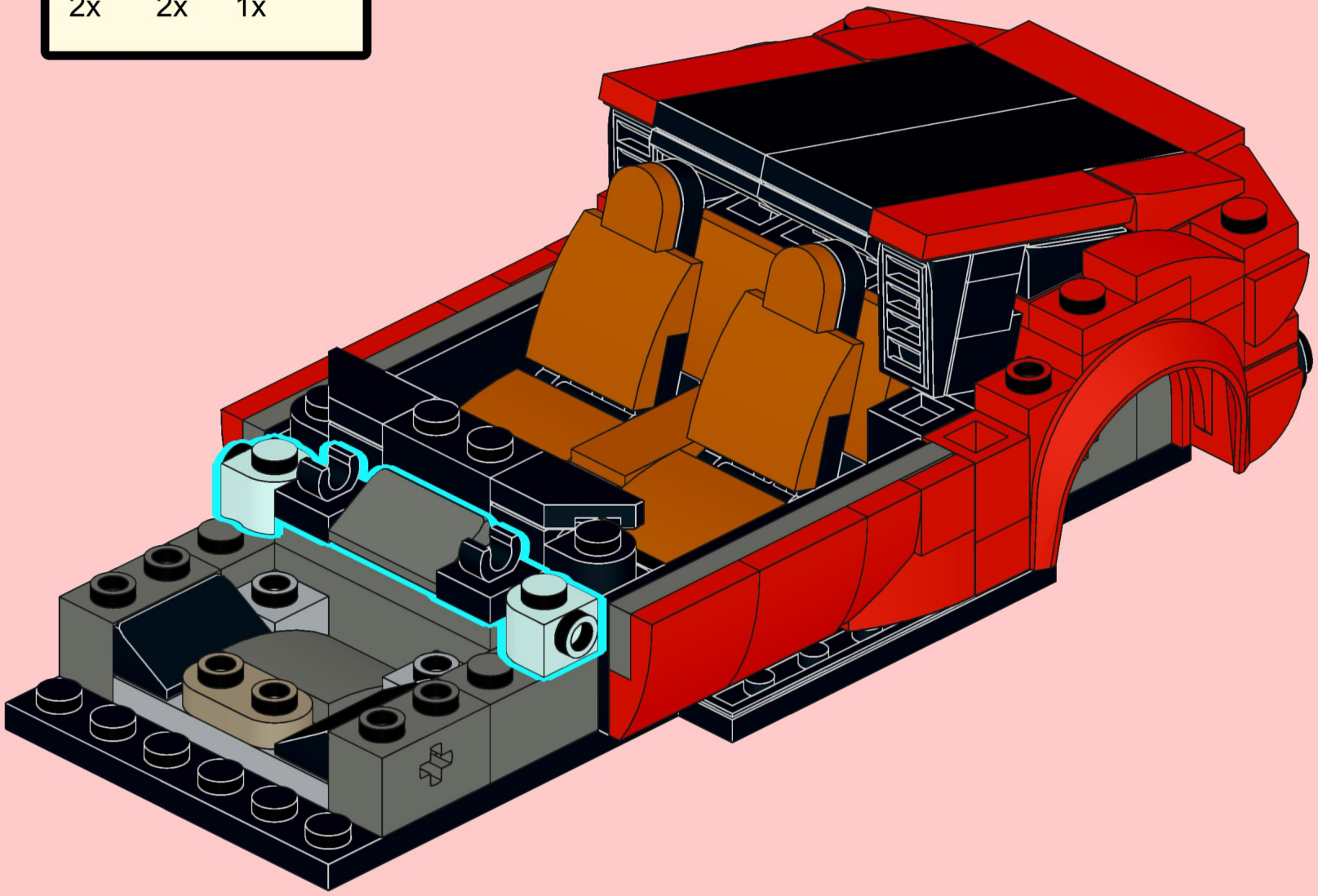

73

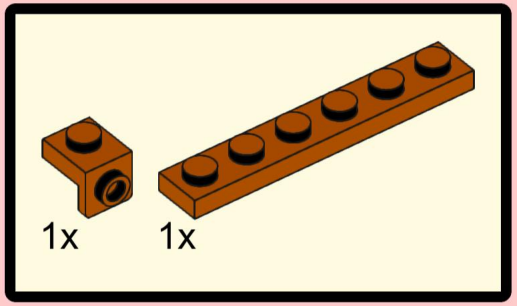

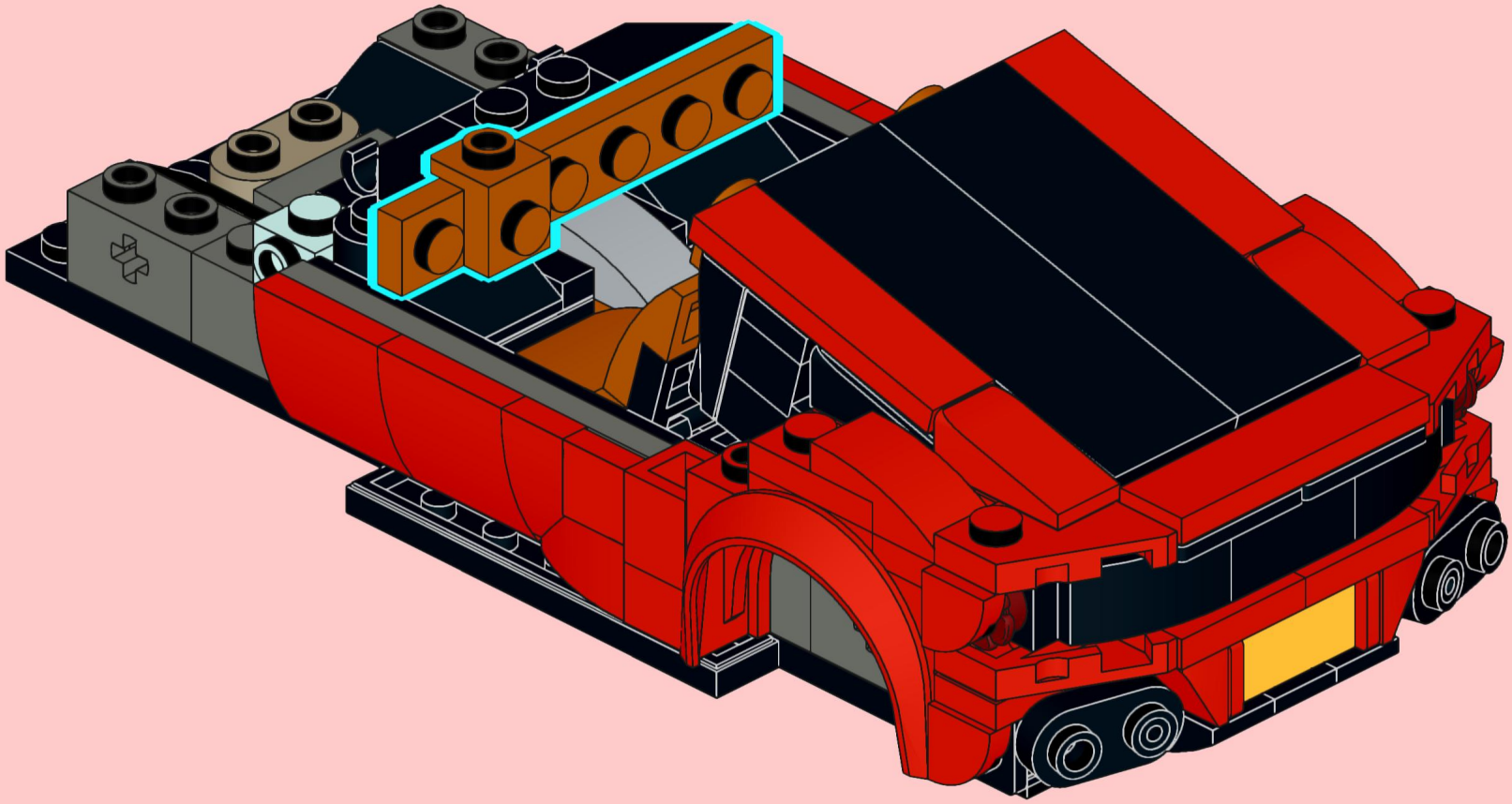

74

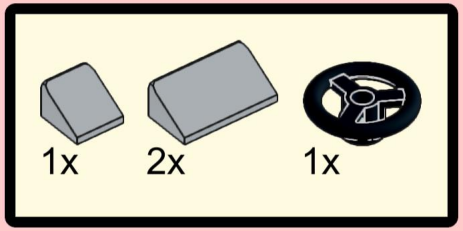

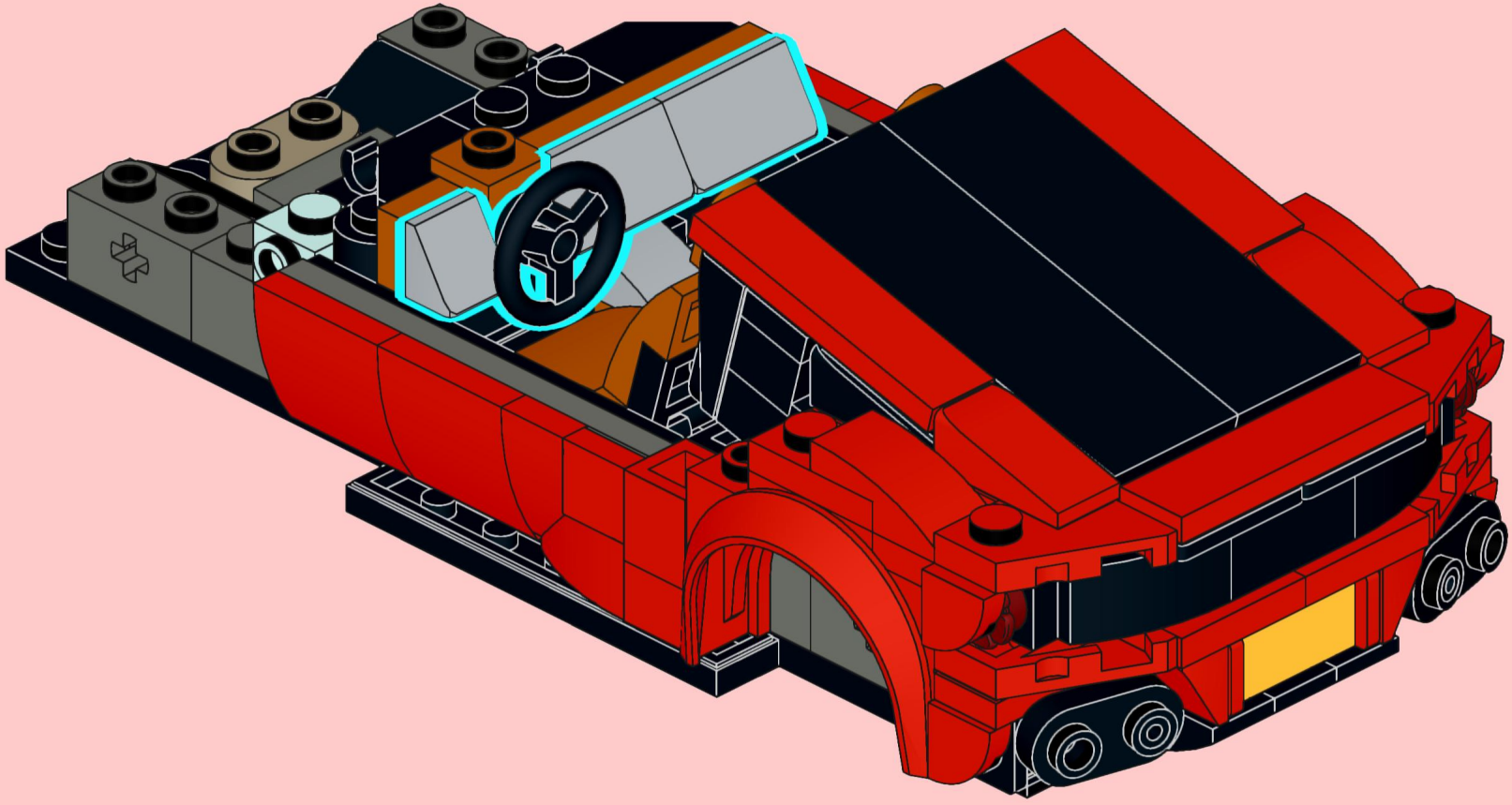

75

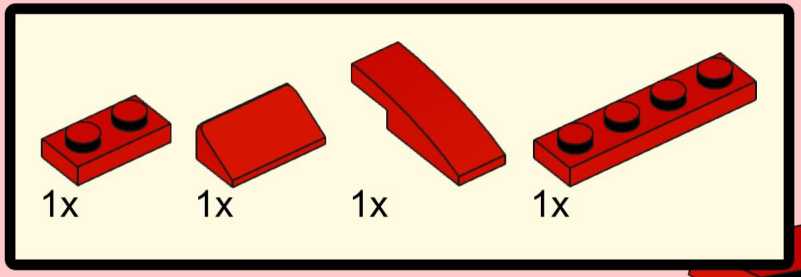

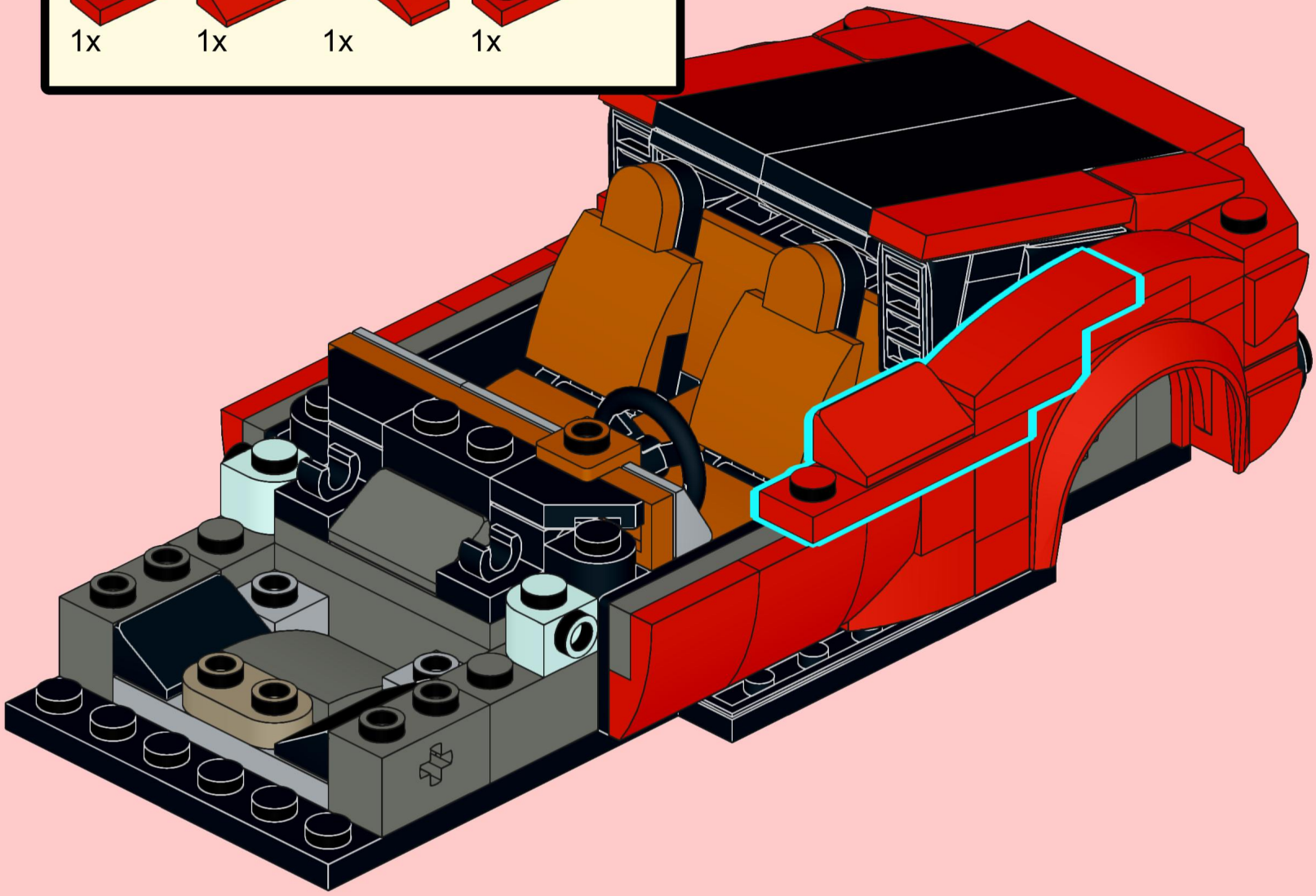

76

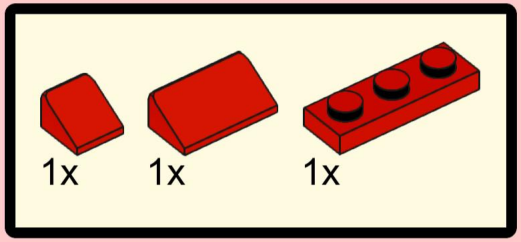

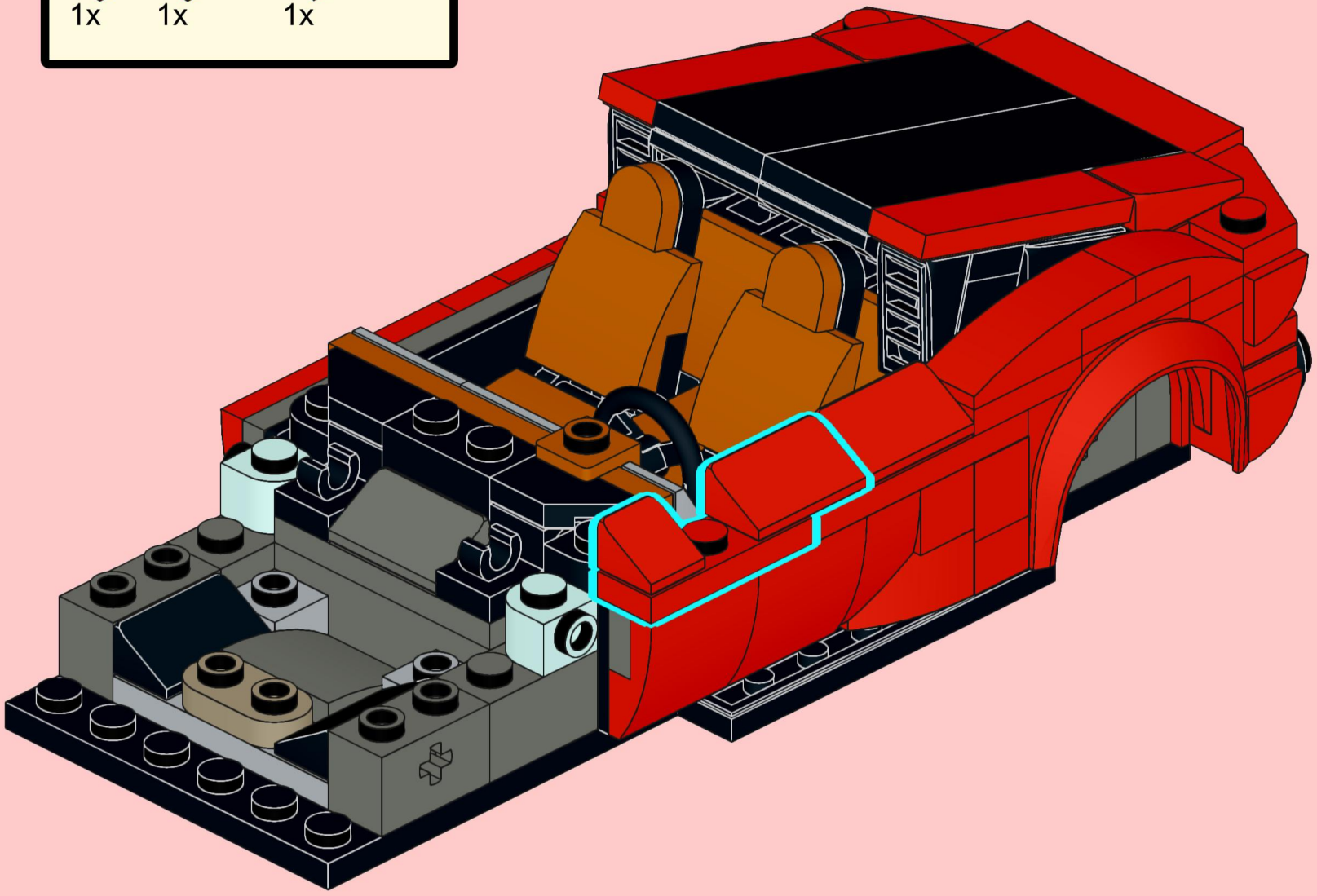

77

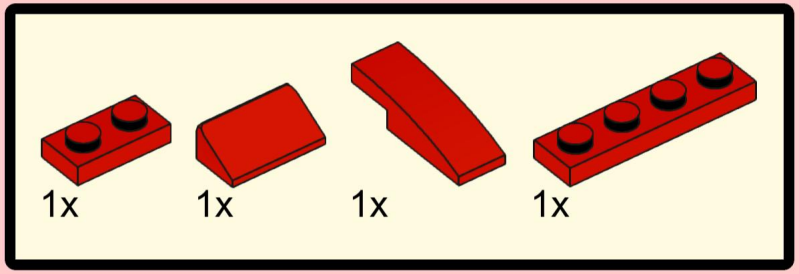

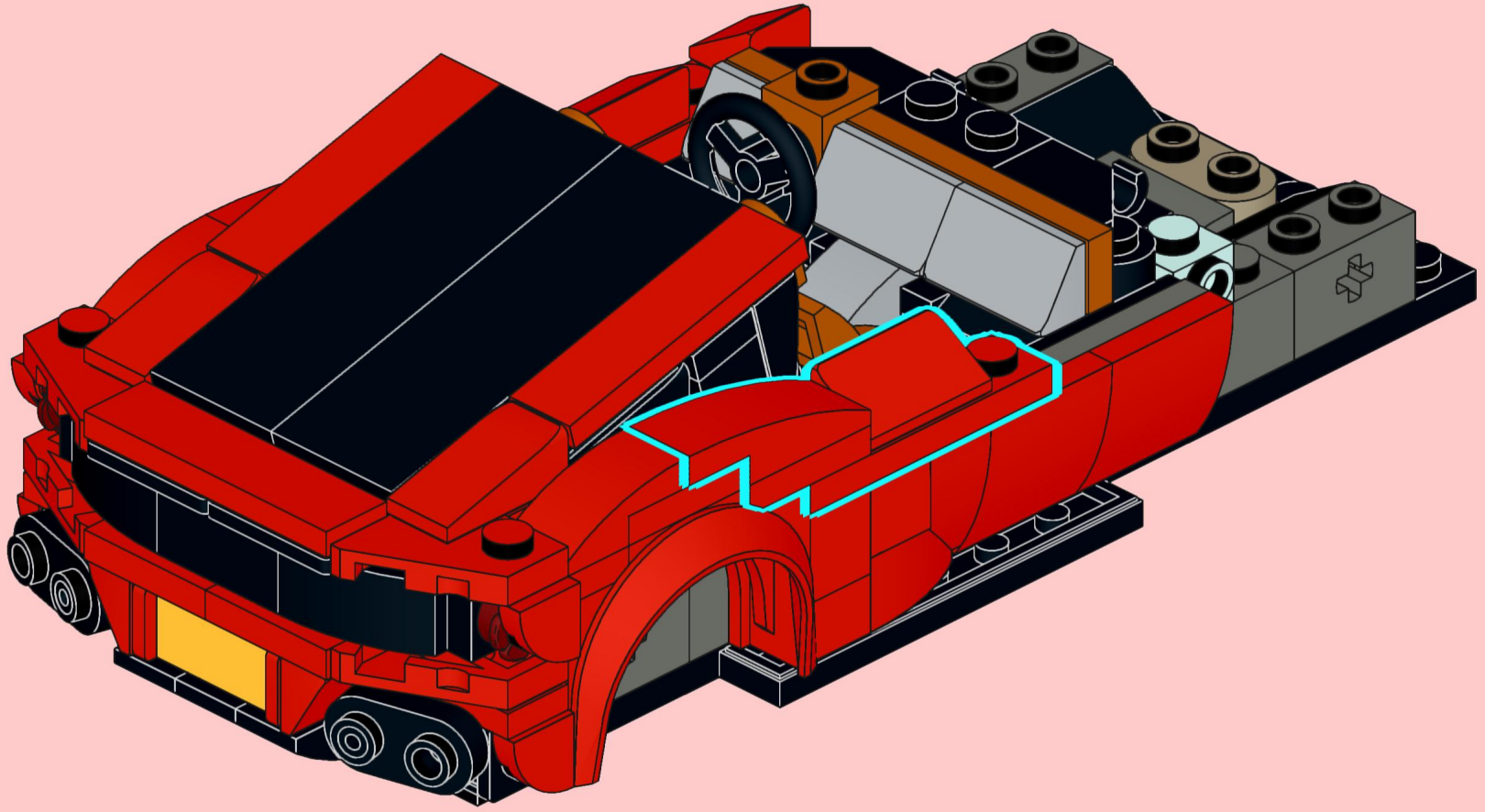

78

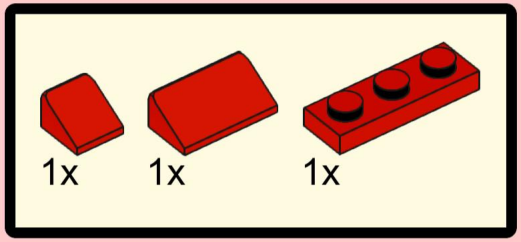

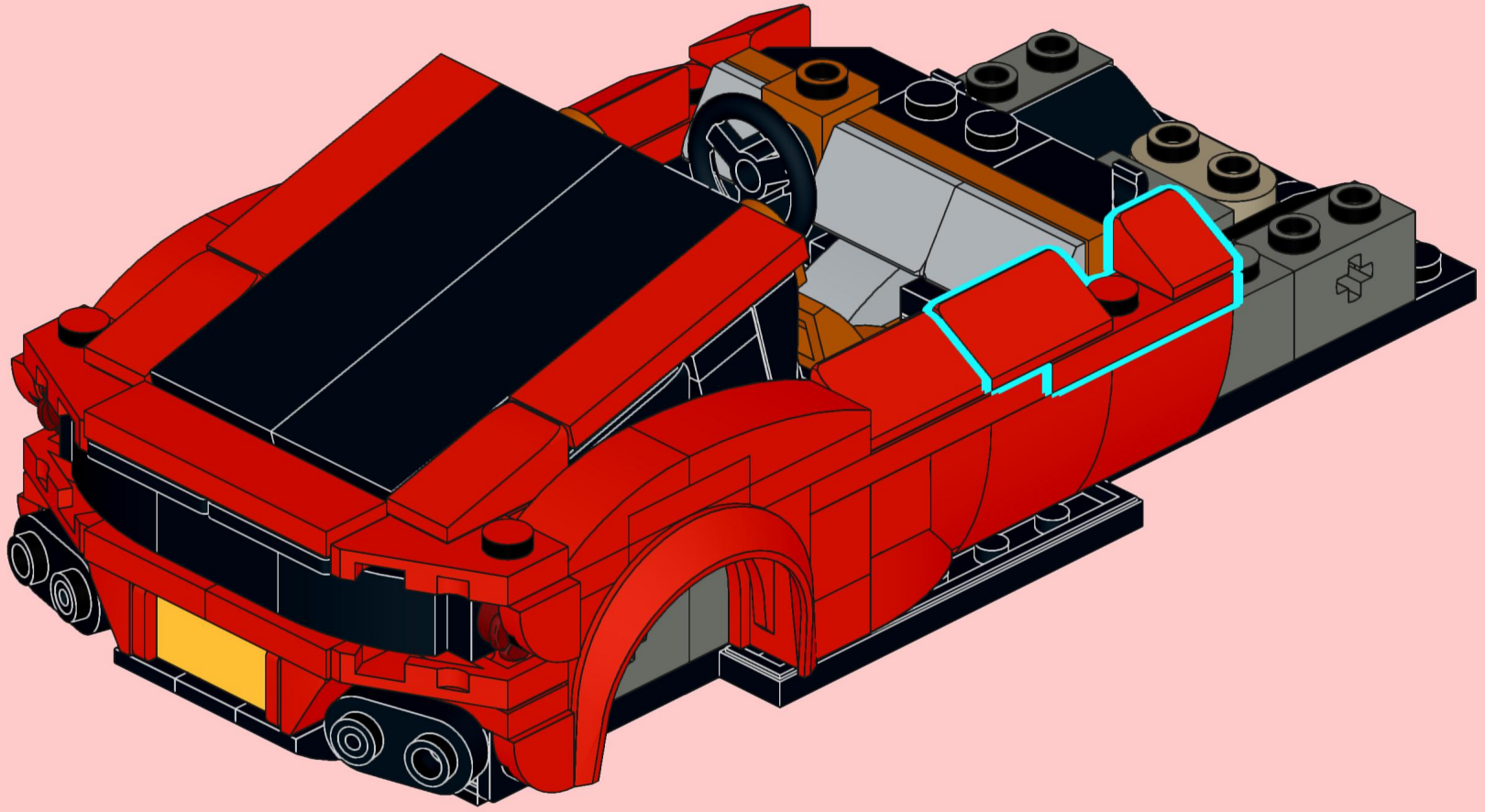

79

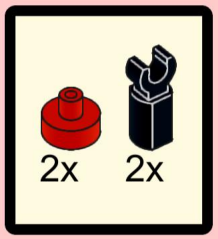

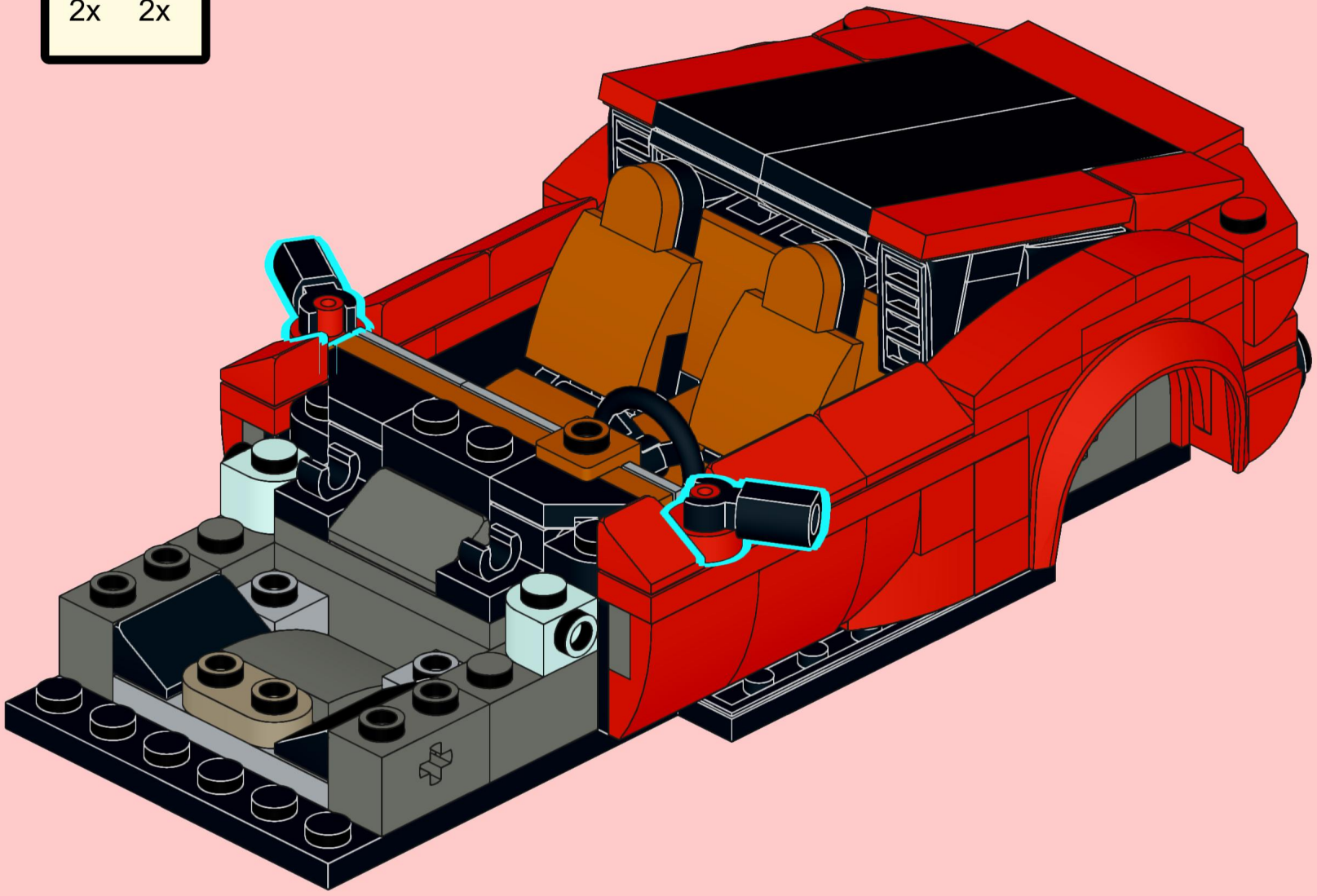

80

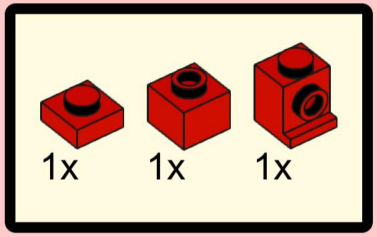

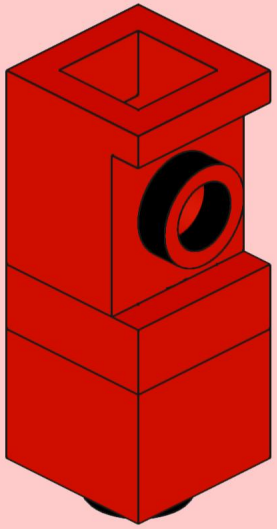

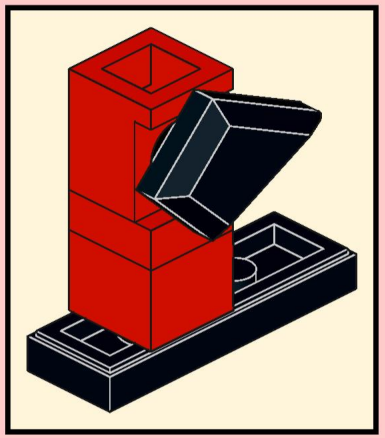

81

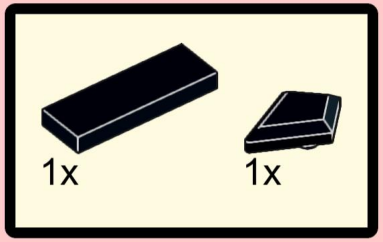

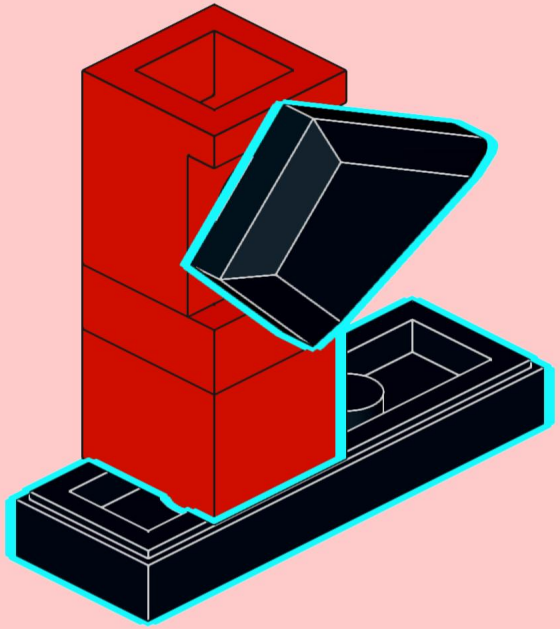

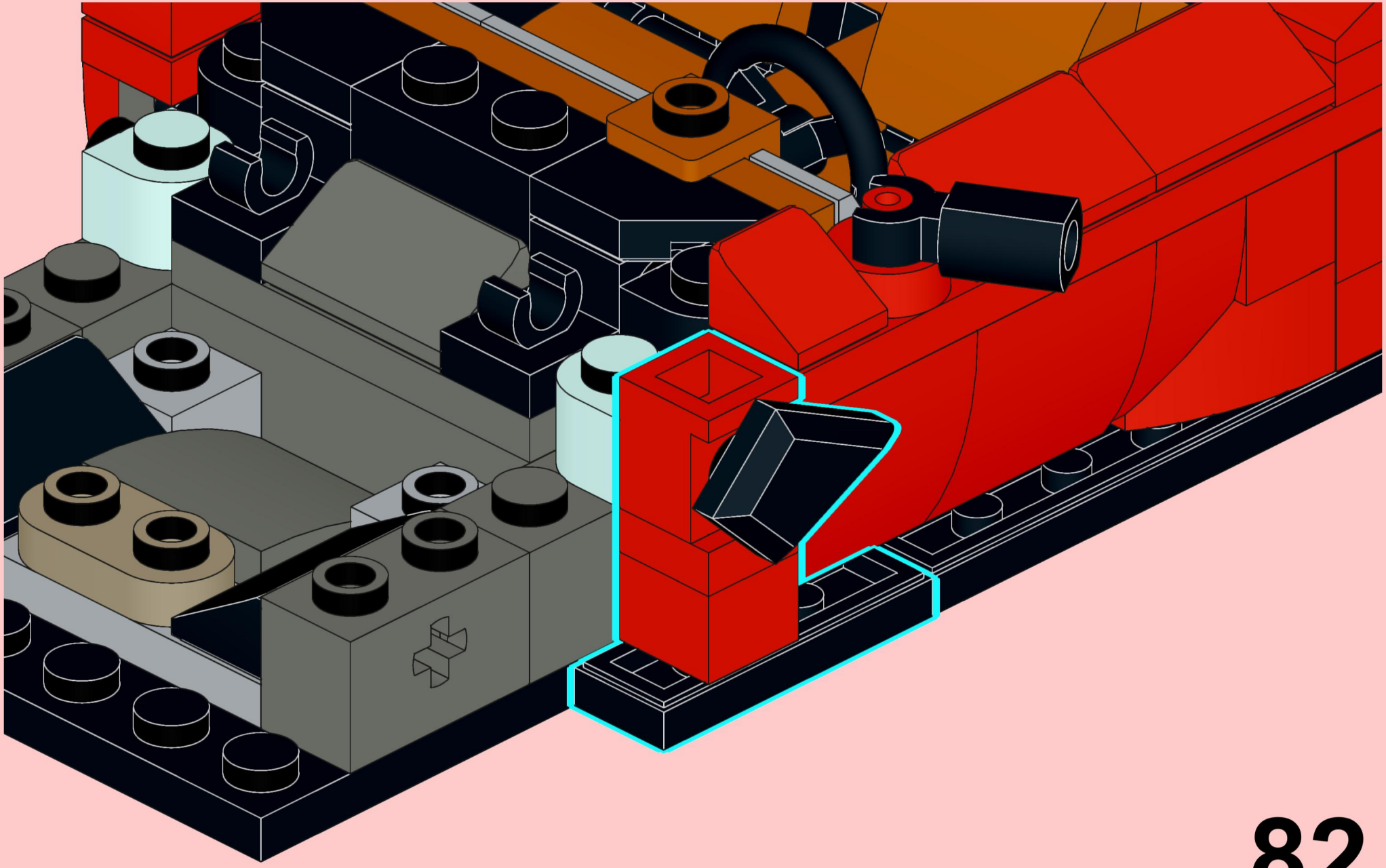

83

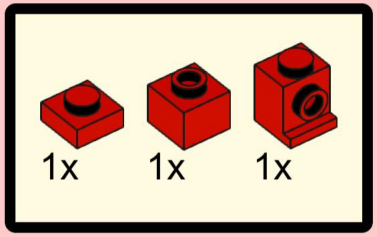

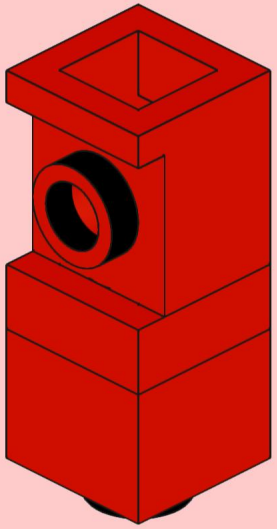

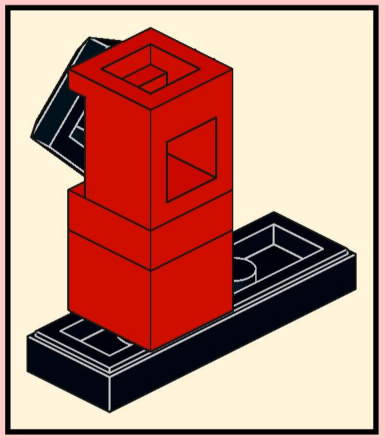

84

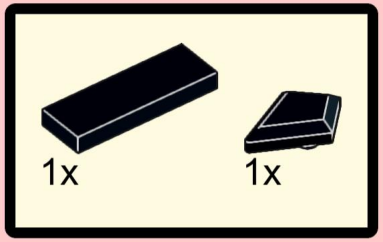

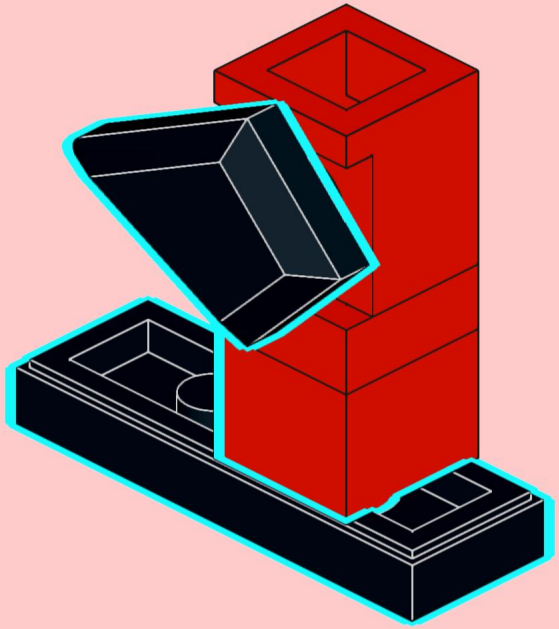

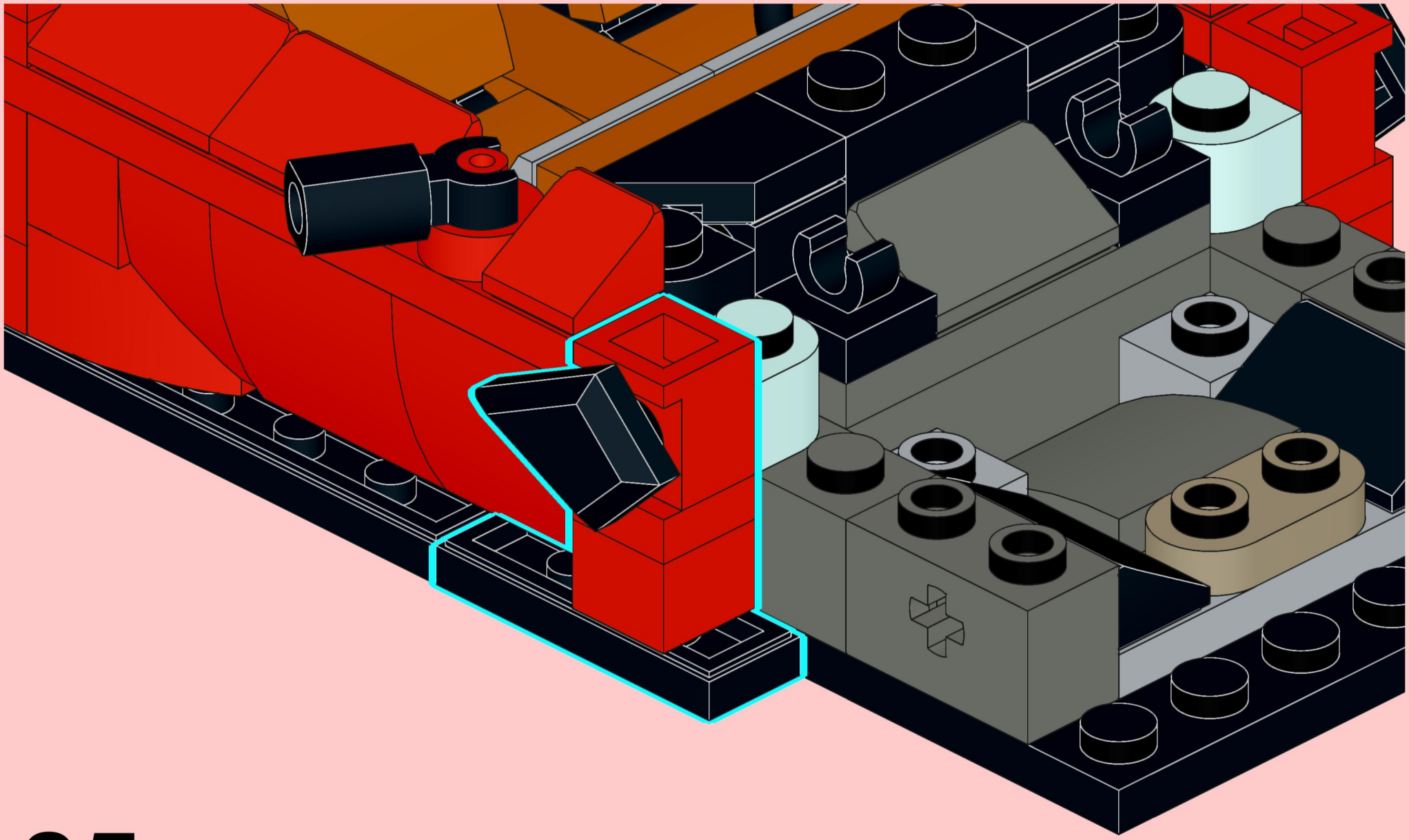

86

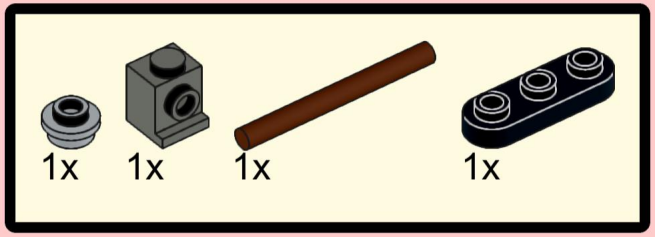

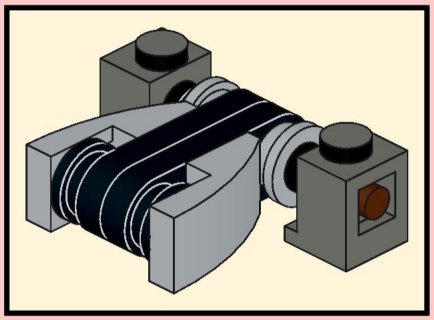

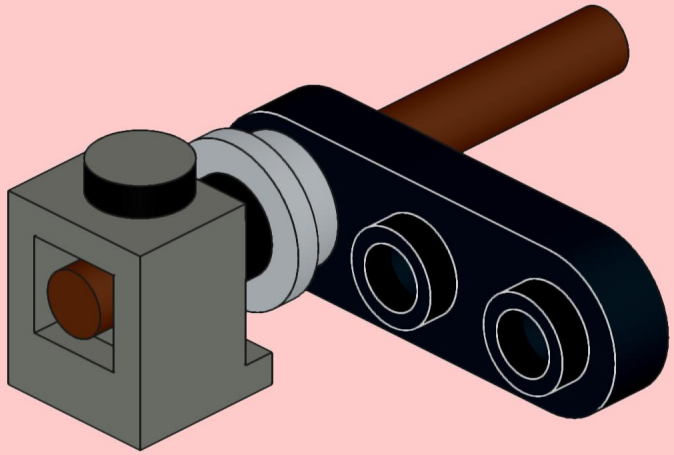

87

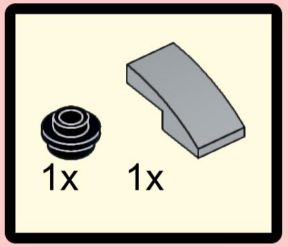

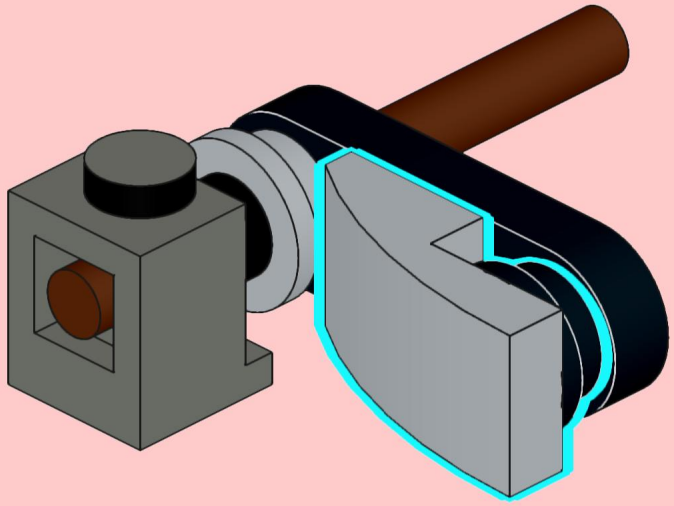

88

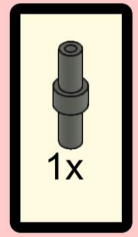

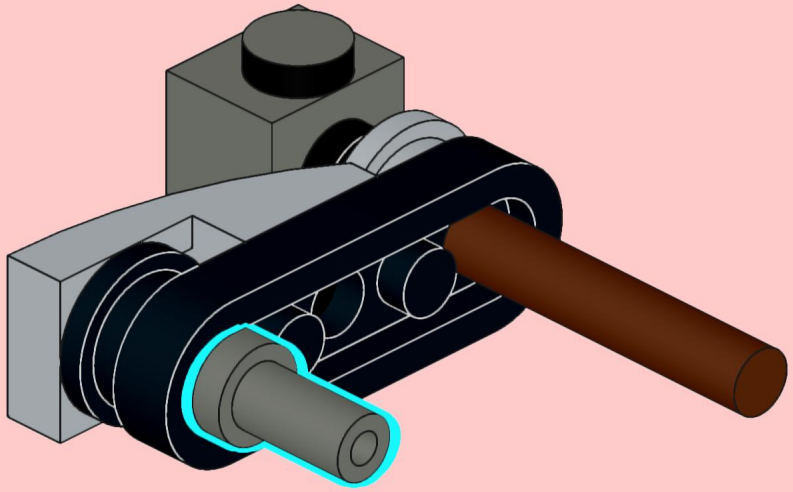

89

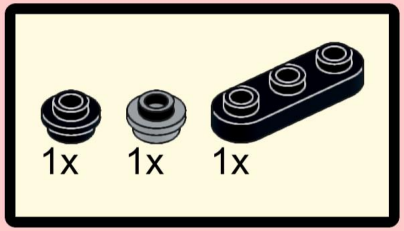

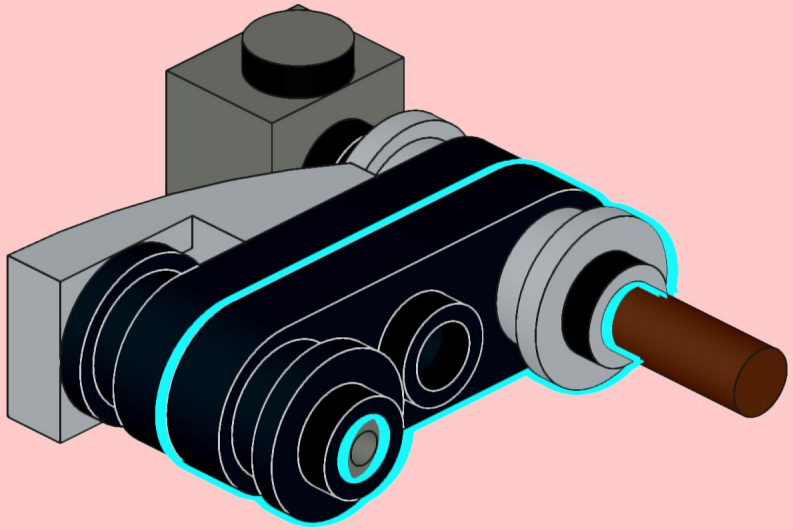

90

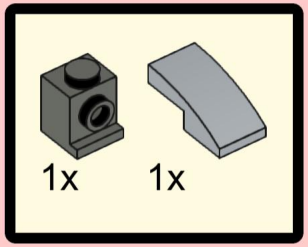

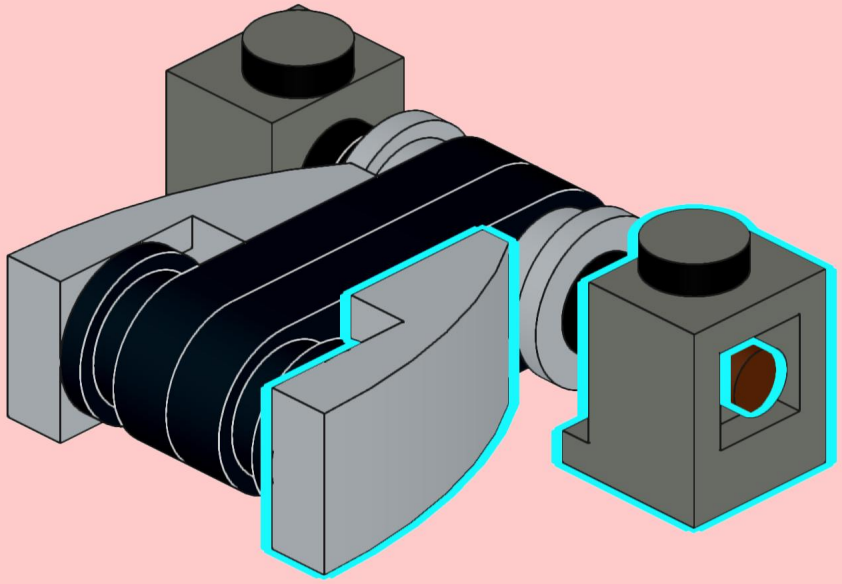

91

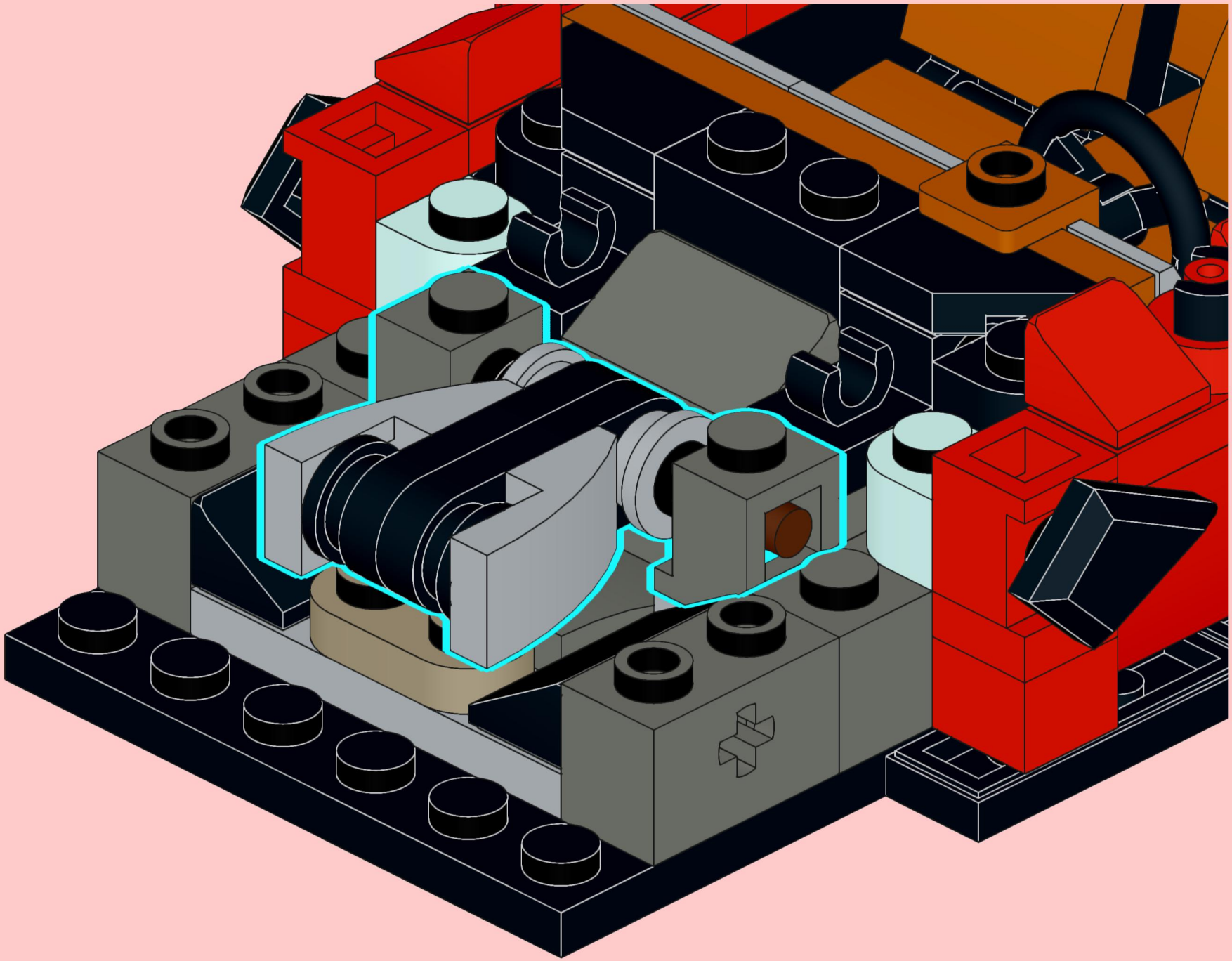

92

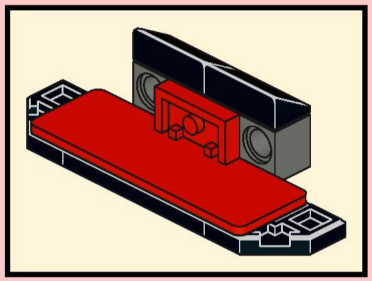

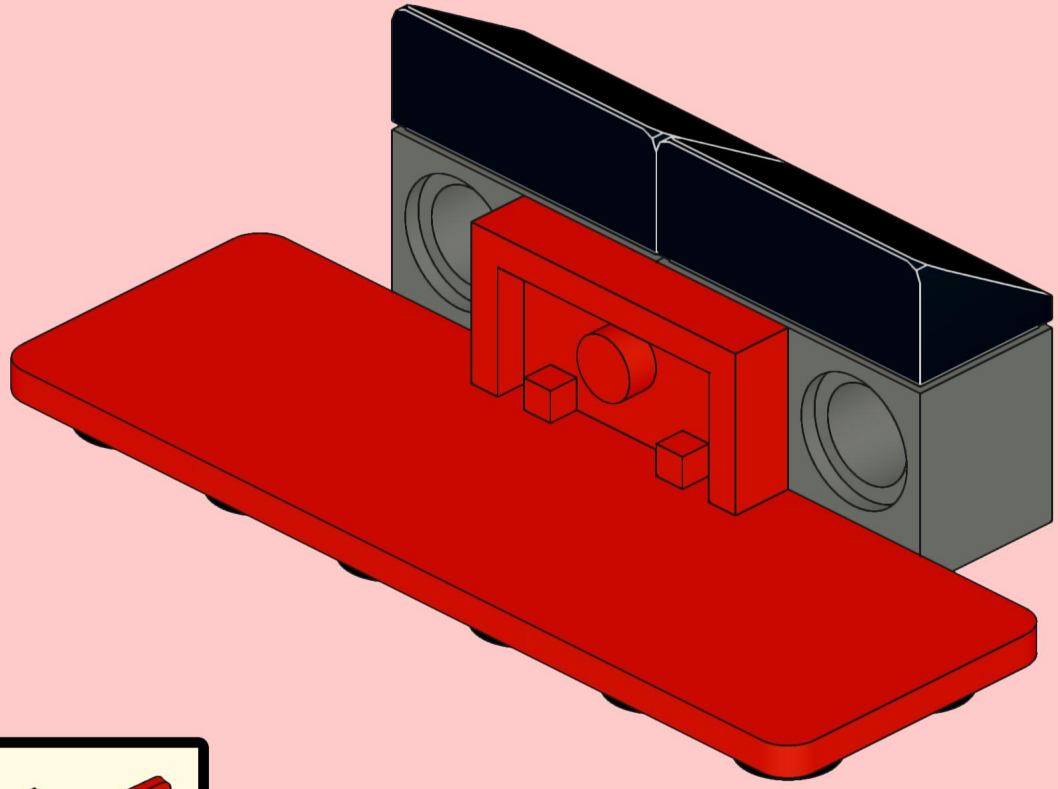

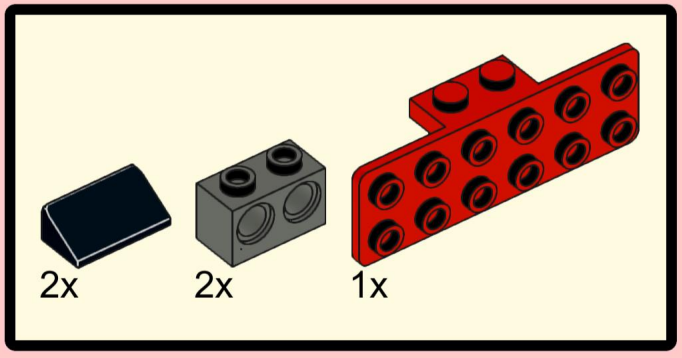

93

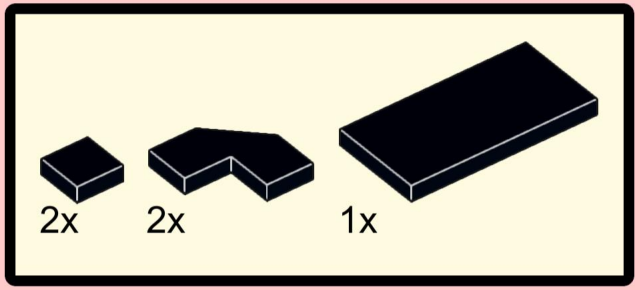

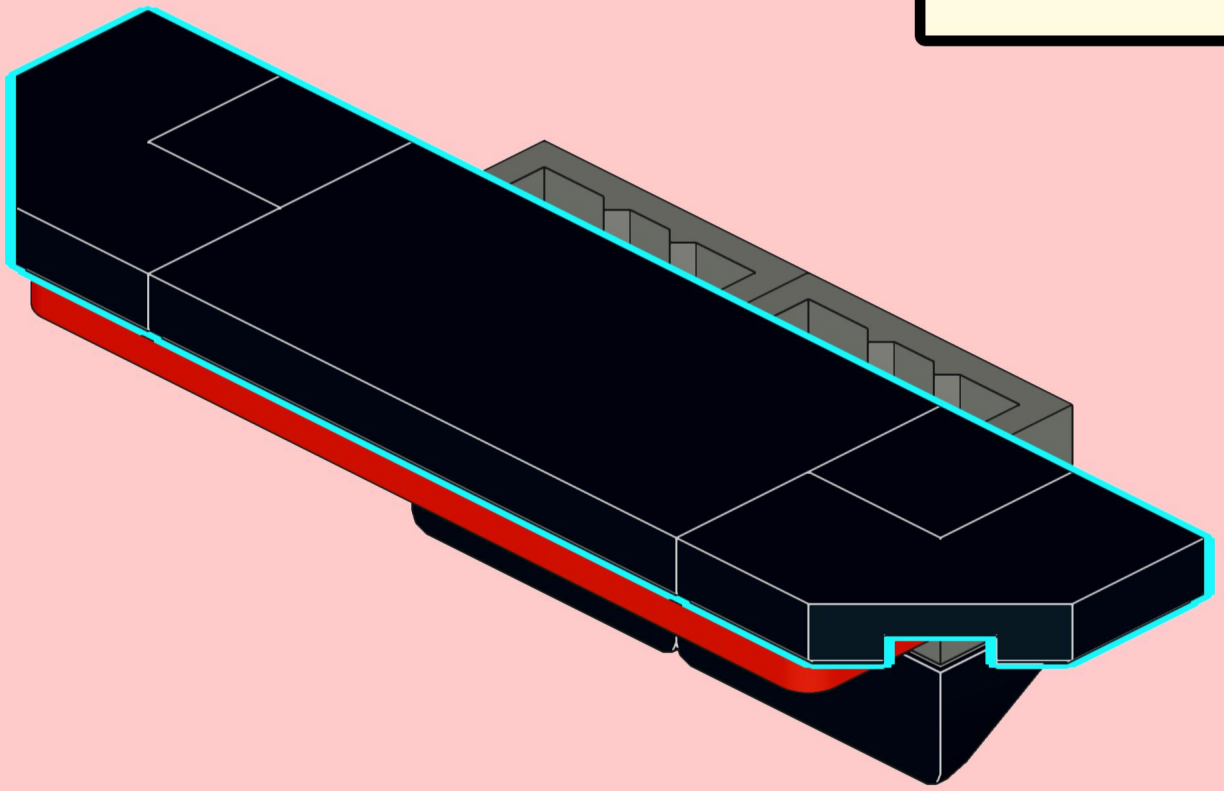

94

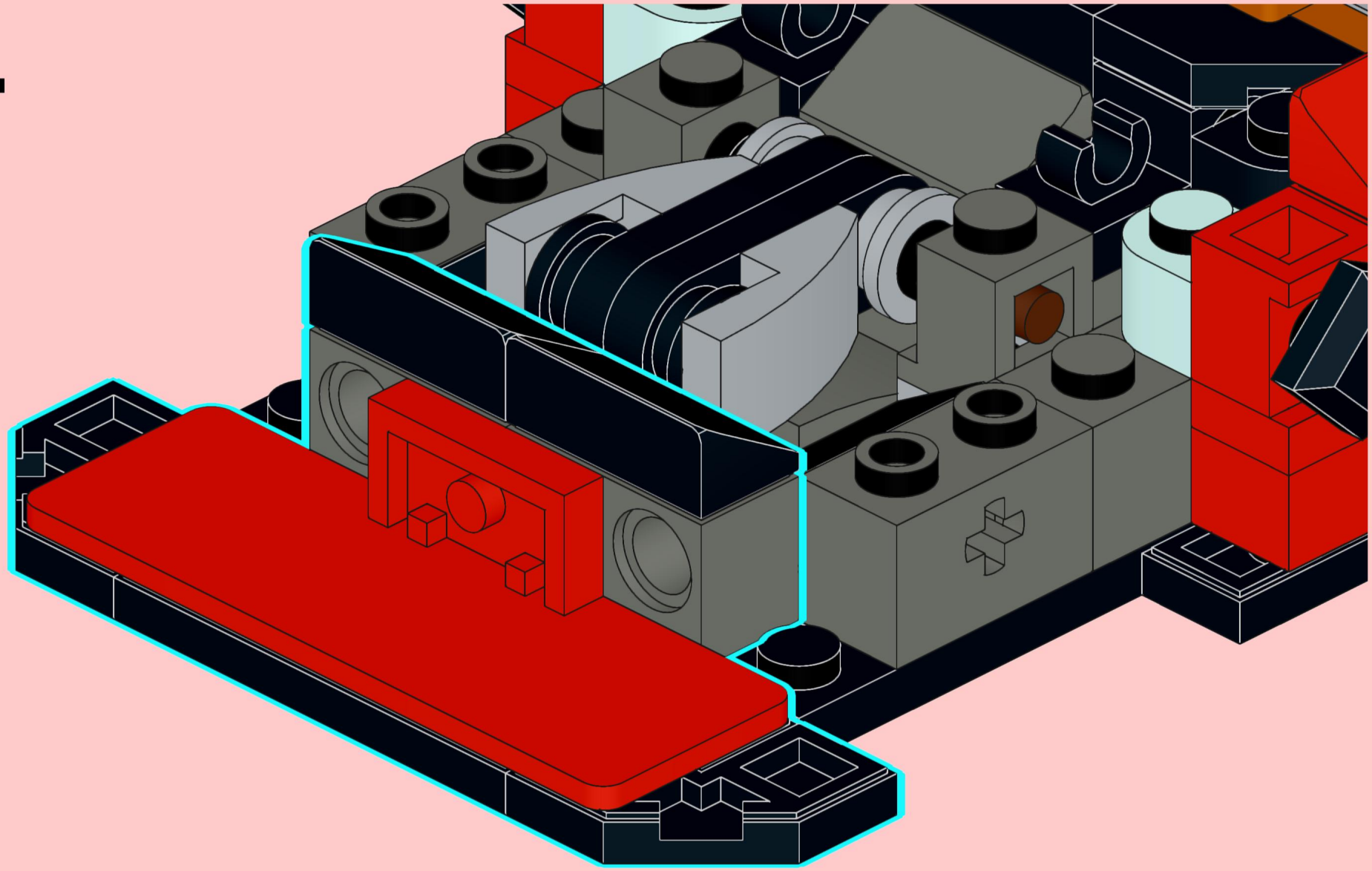

95

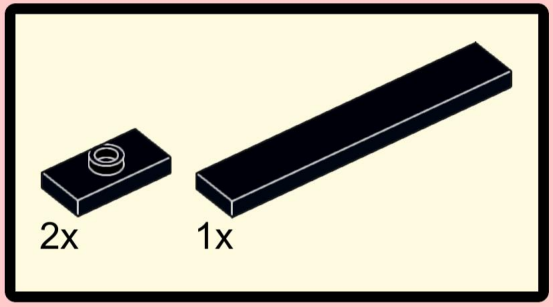

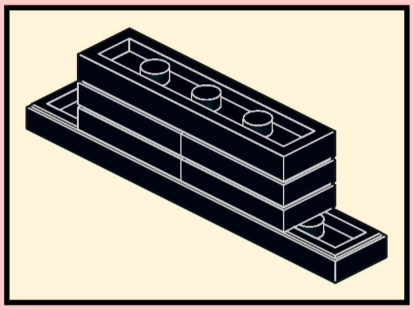

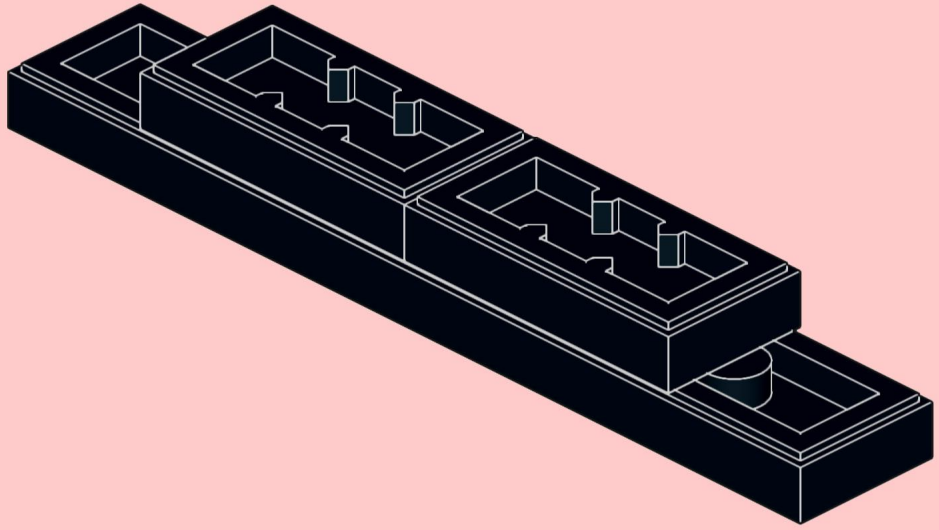

96

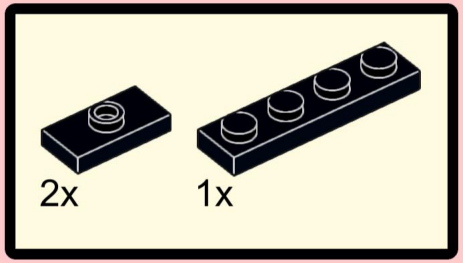

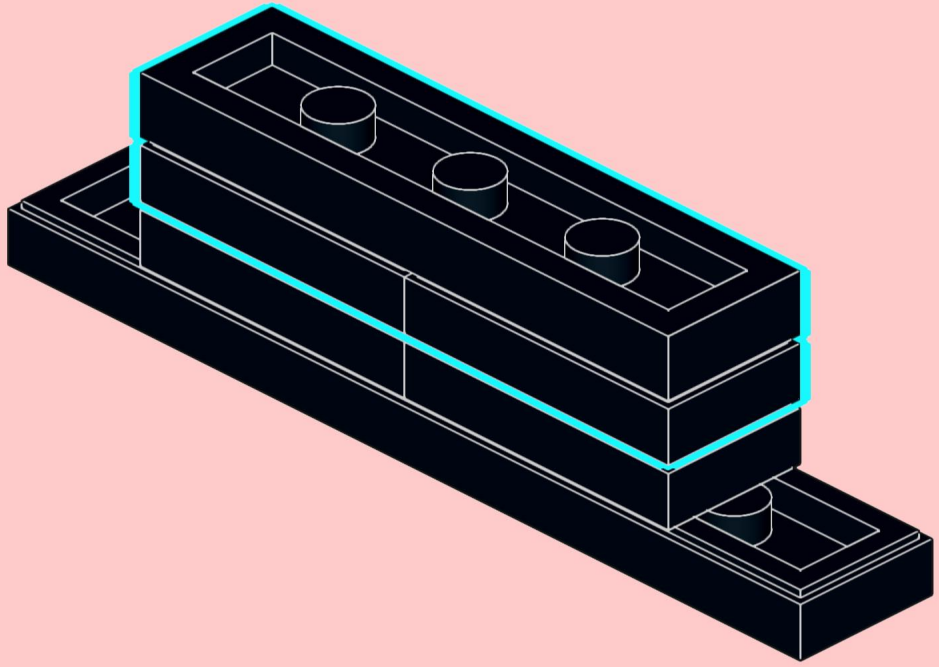

97

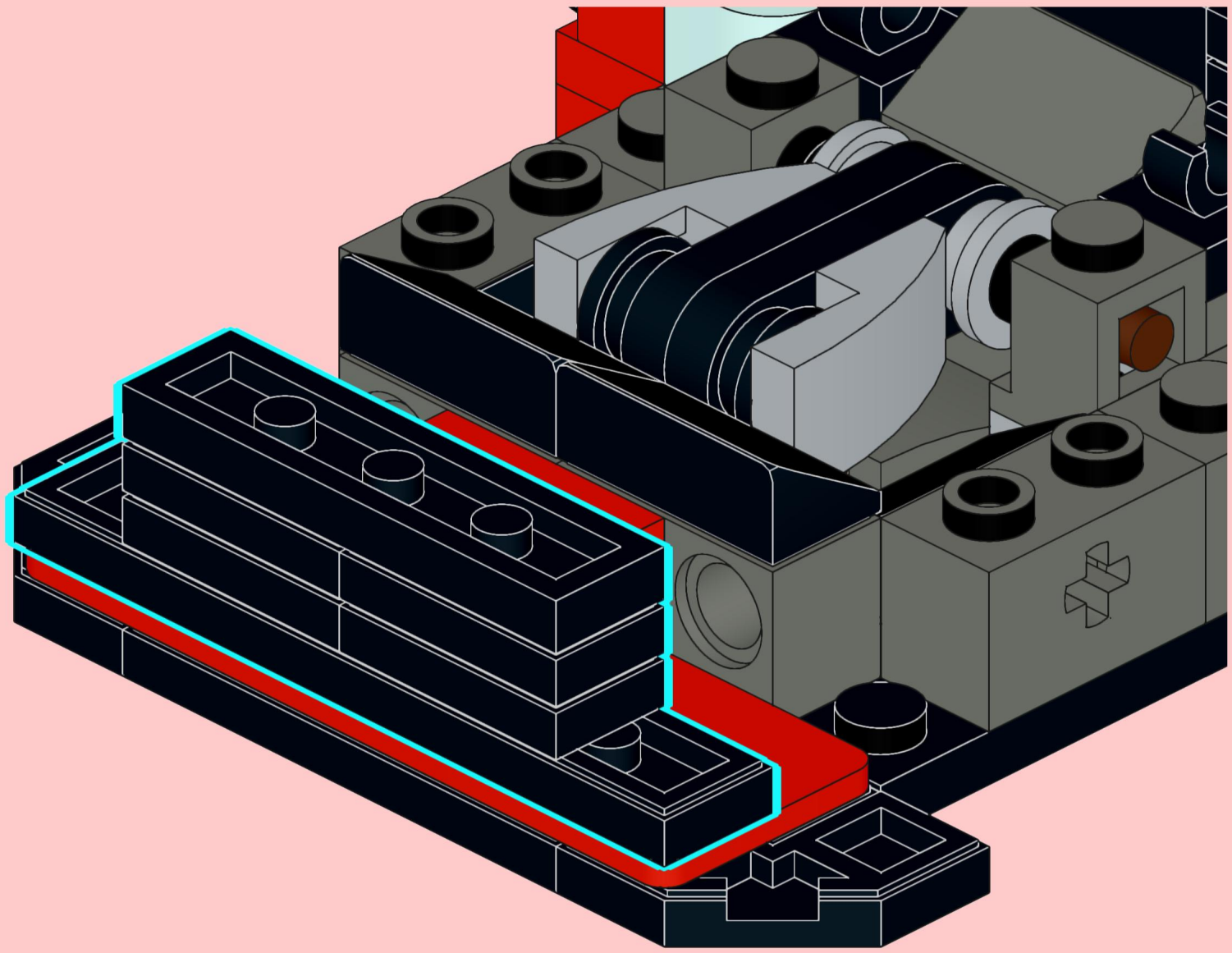

98

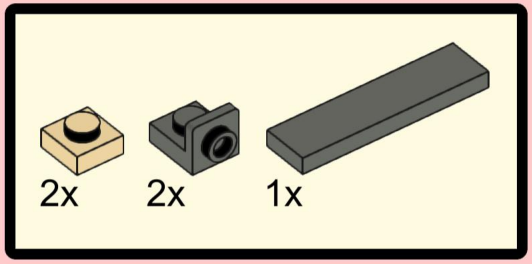

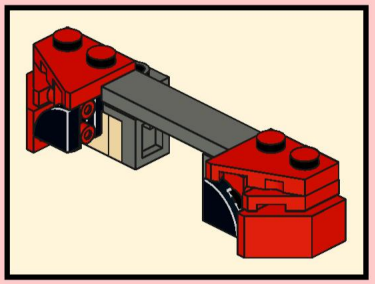

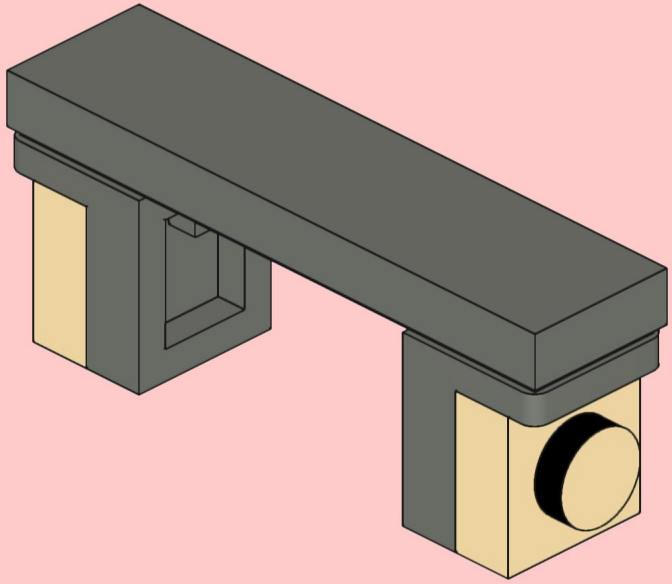

99

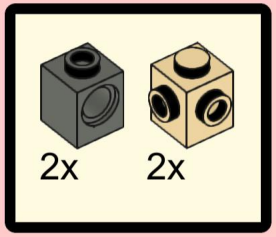

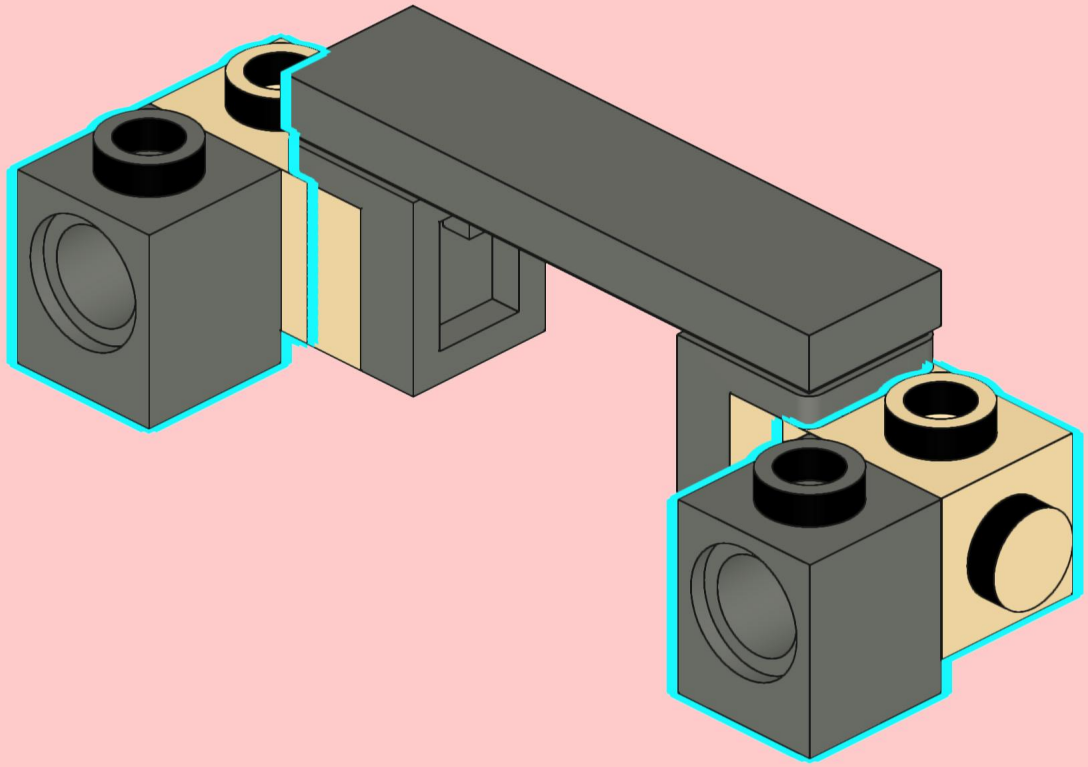

100

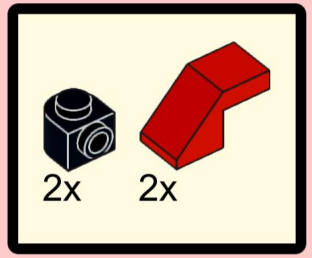

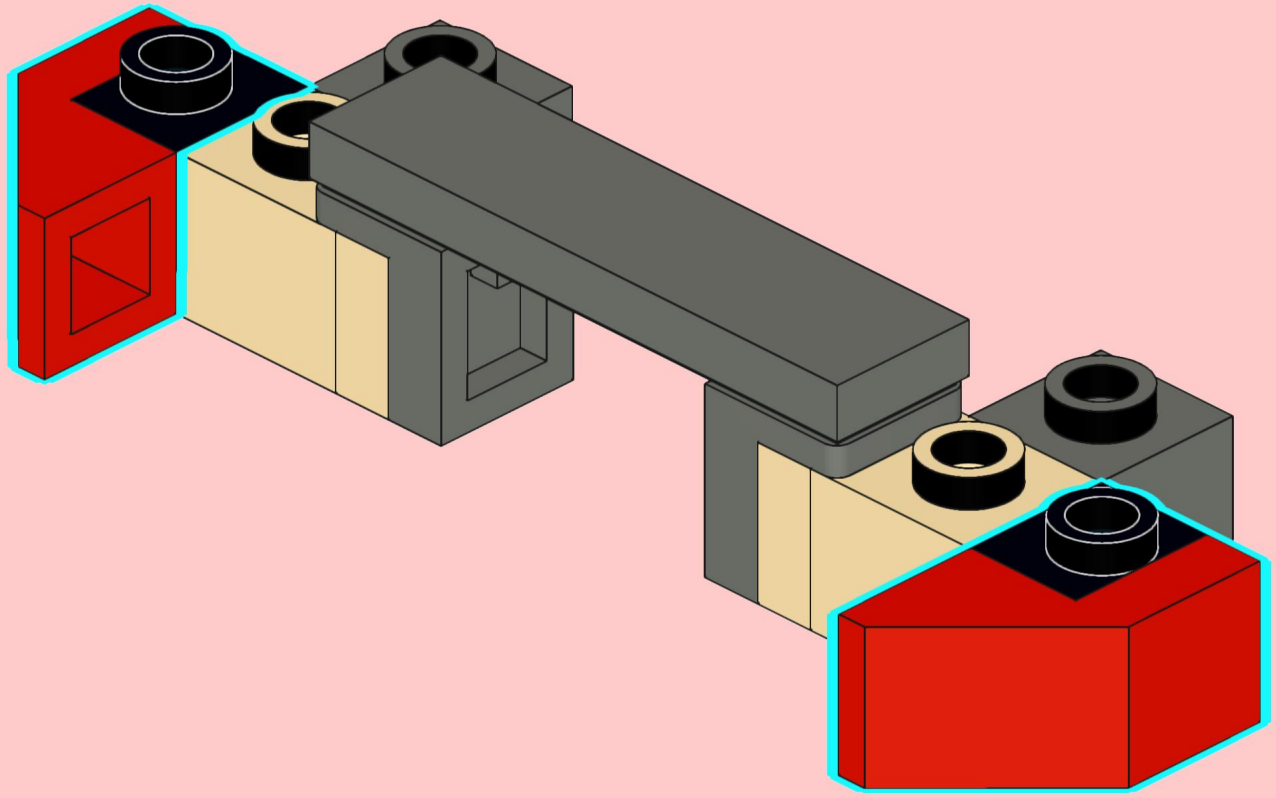

101

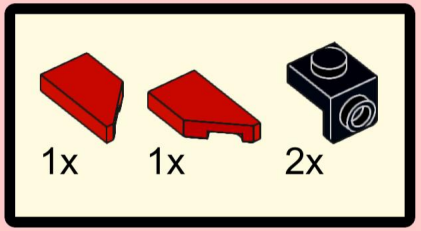

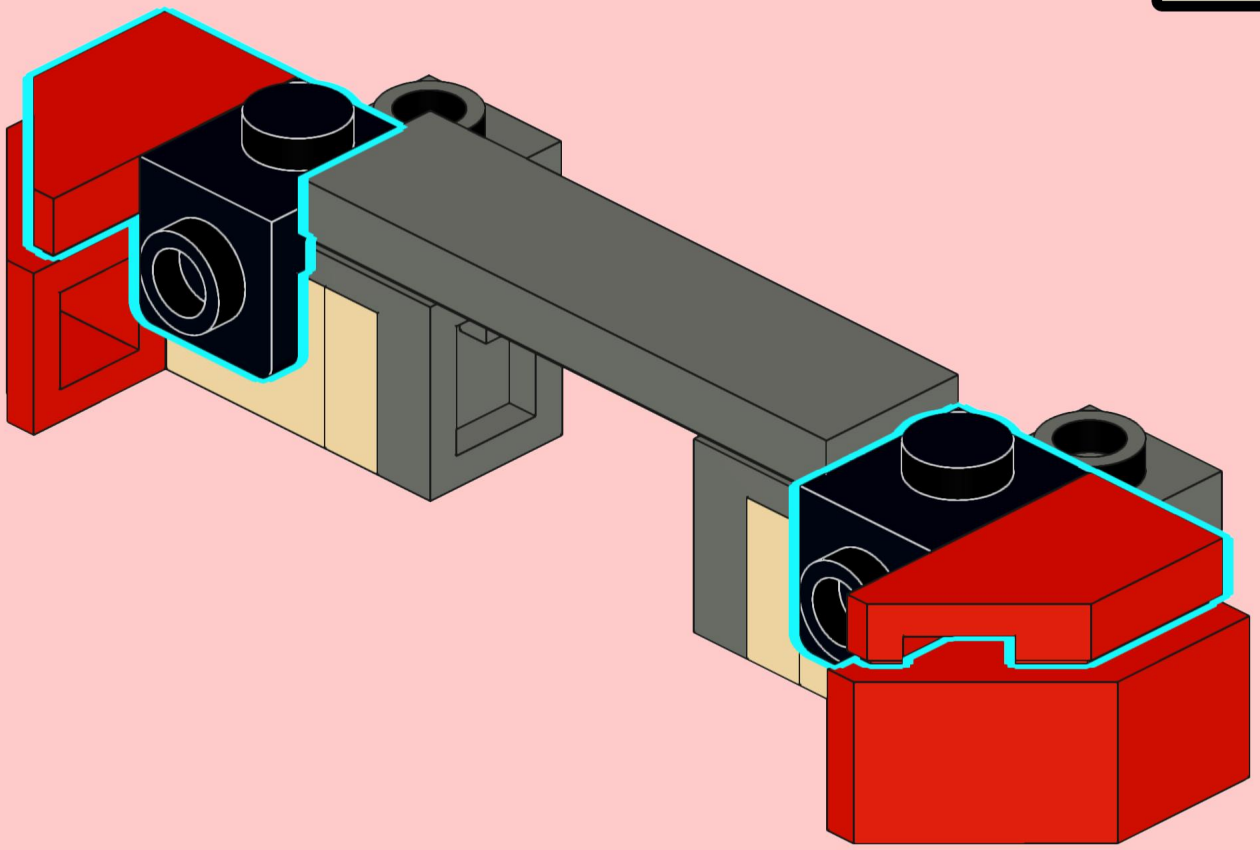

102

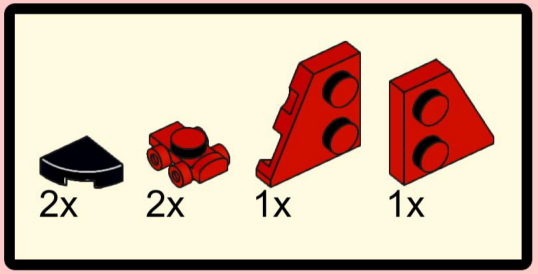

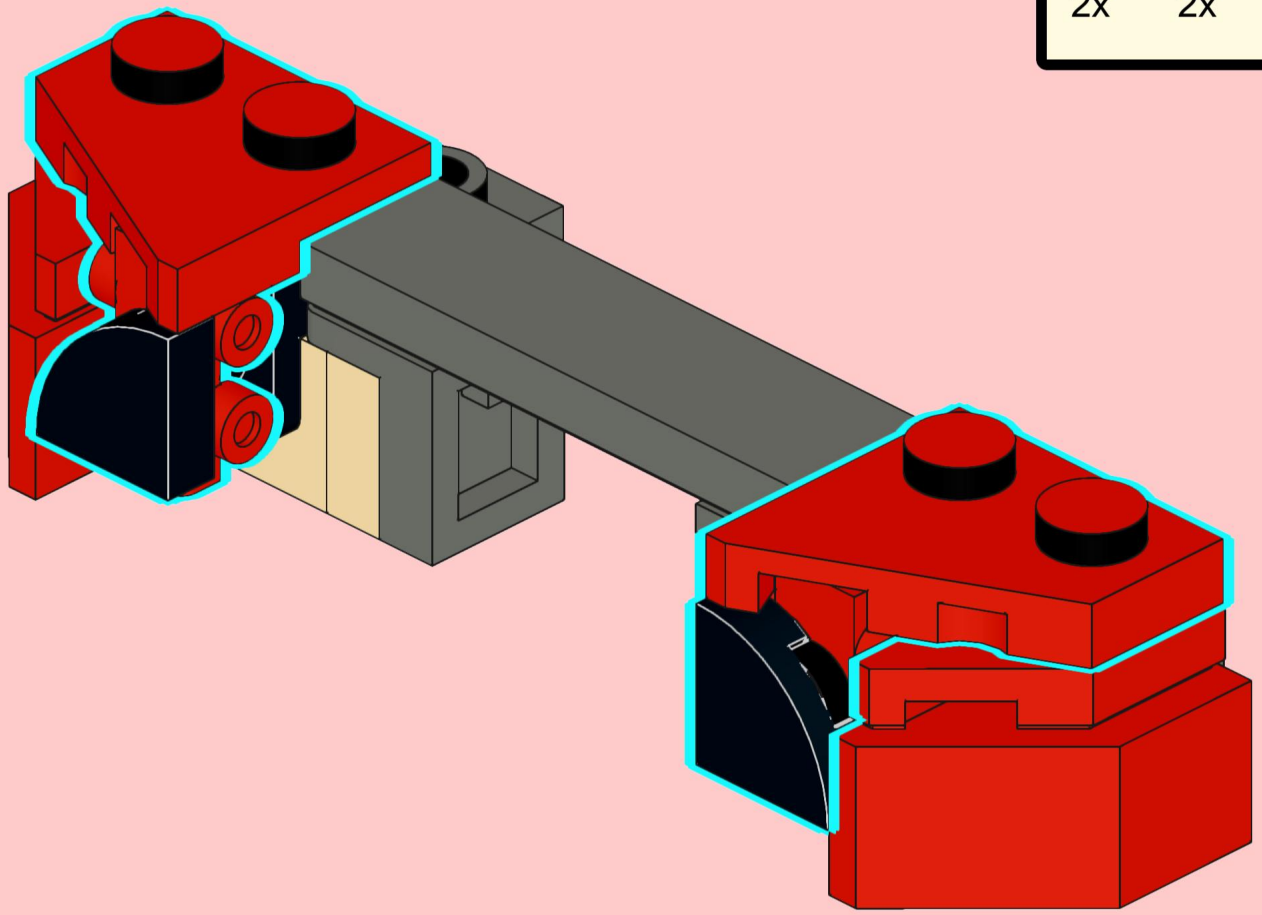

103

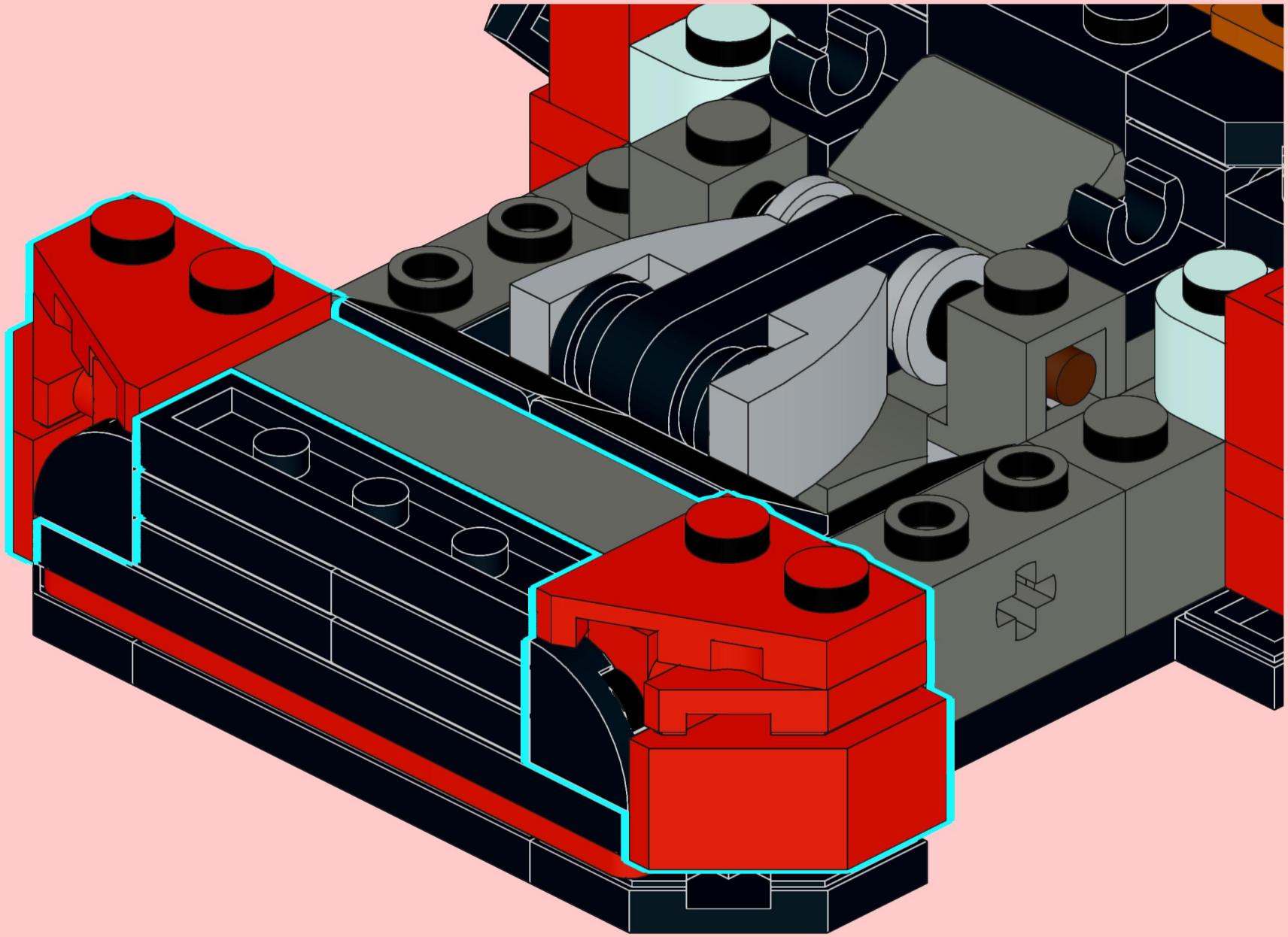

104

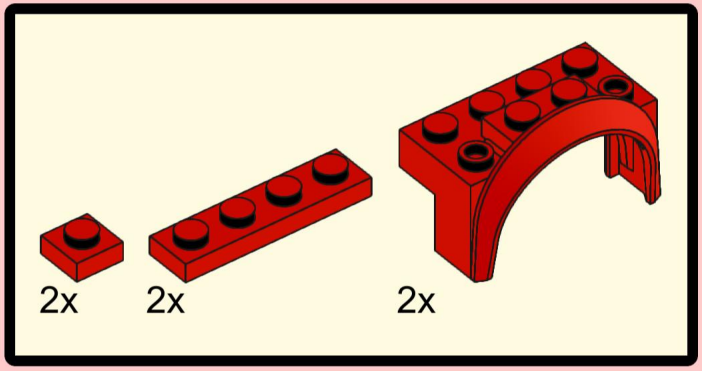

105

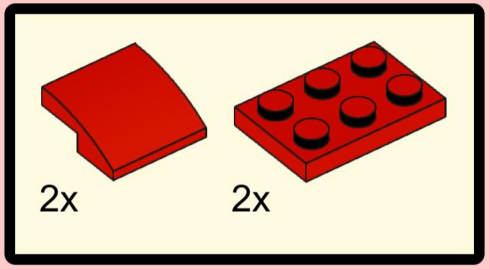

106

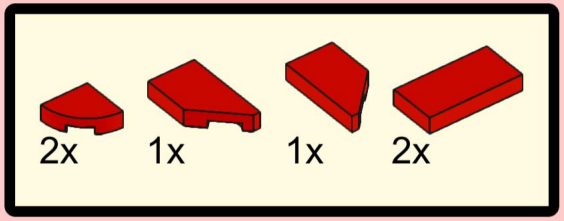

107

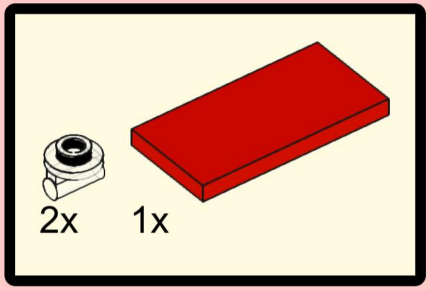

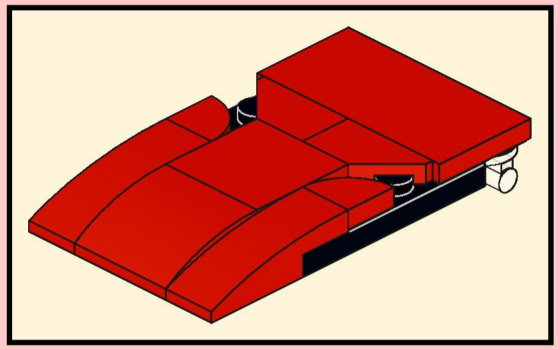

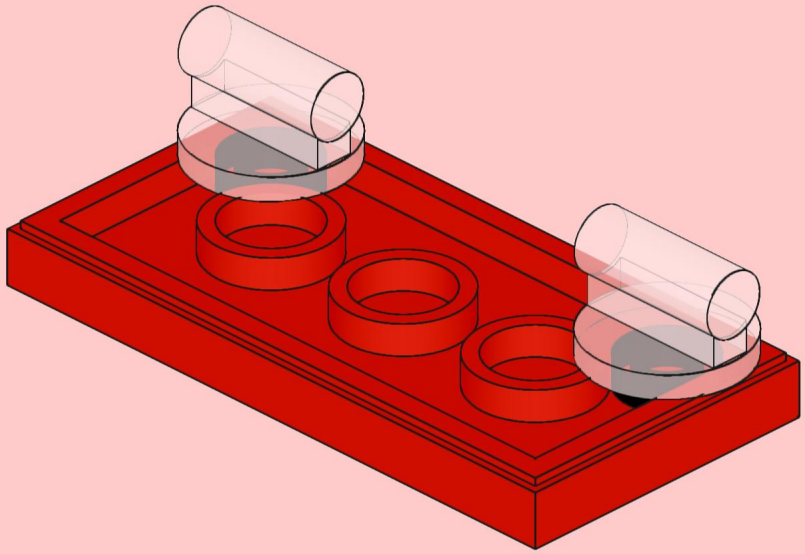

108

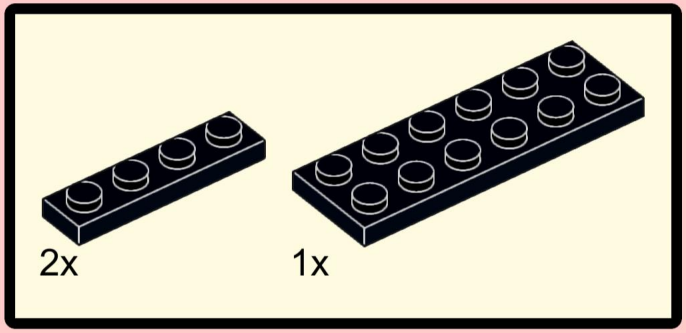

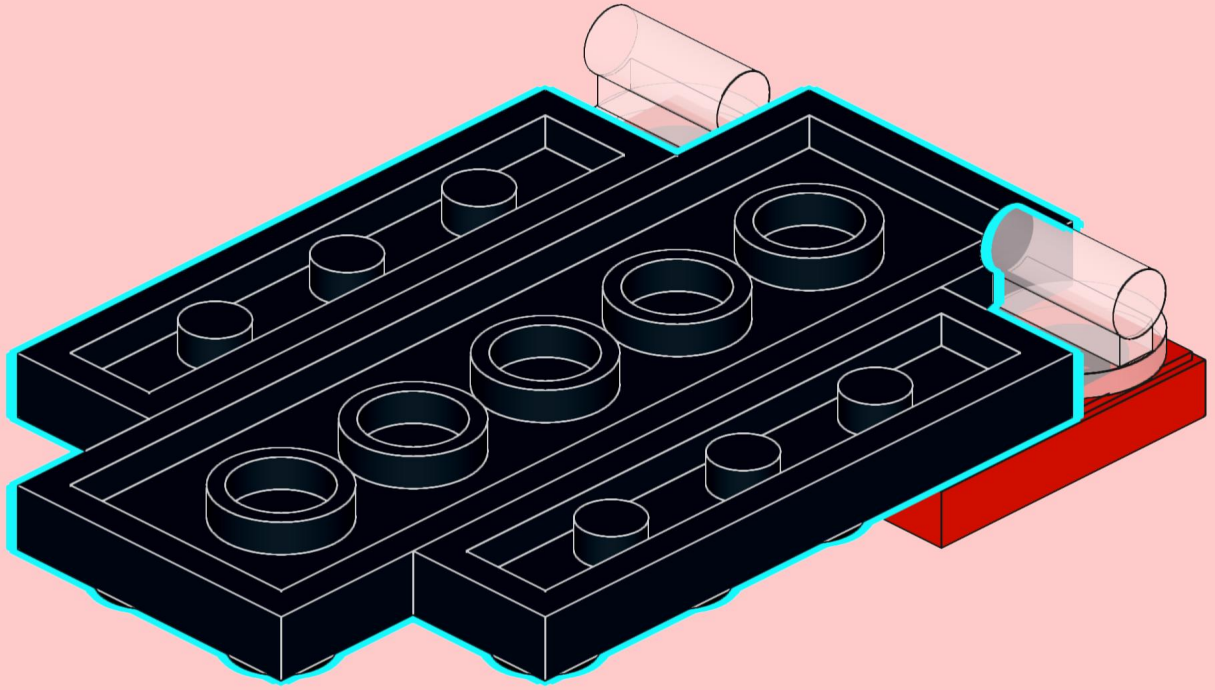

109

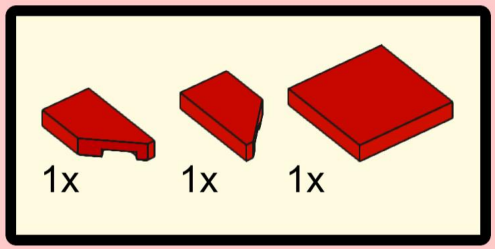

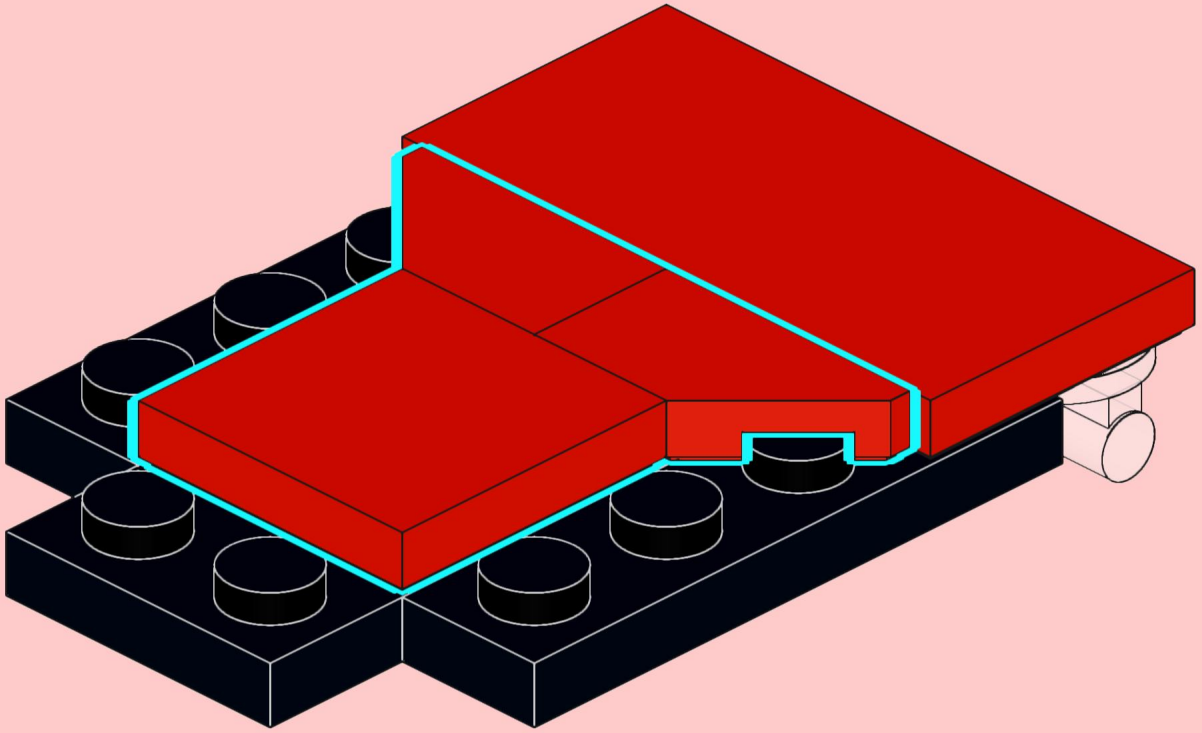

110

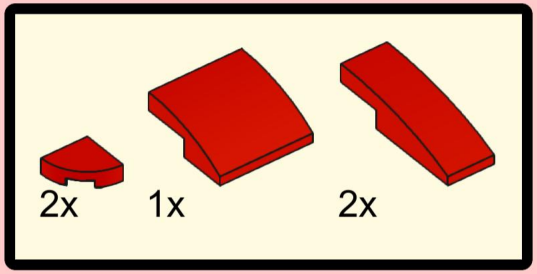

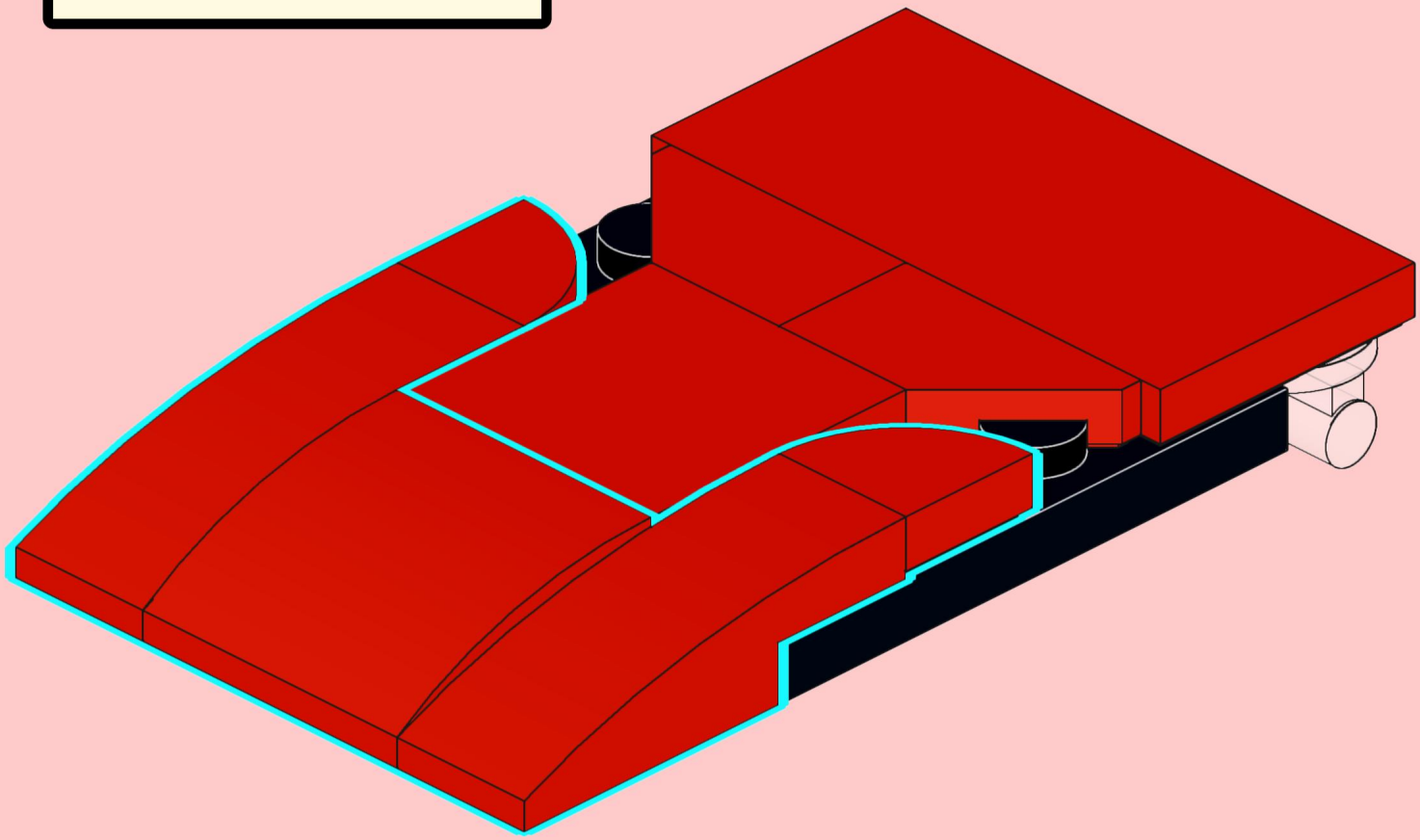

111

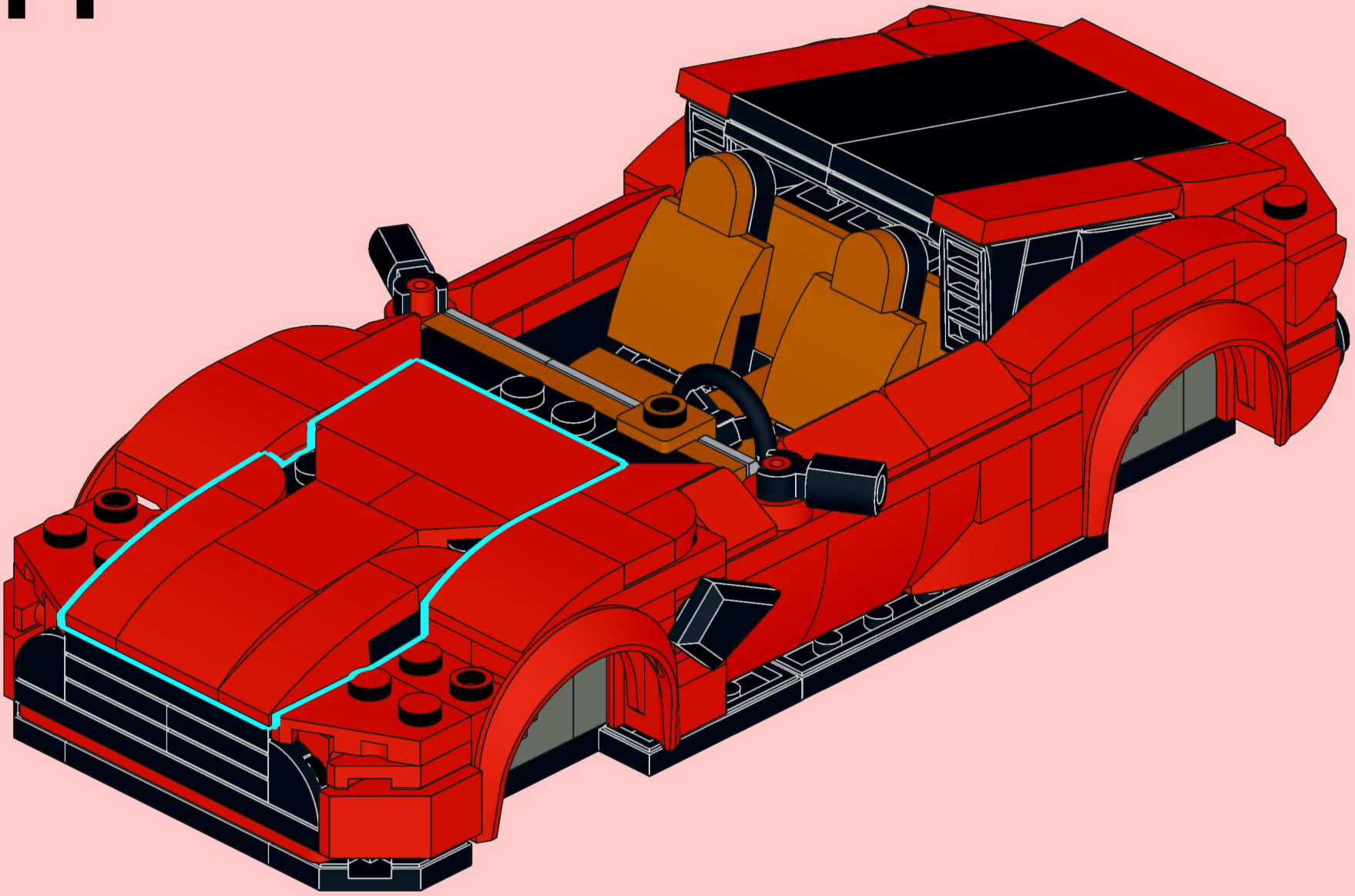

112

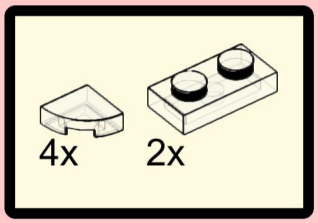

113

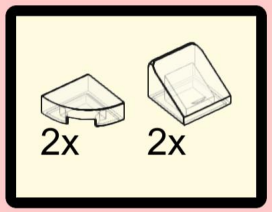

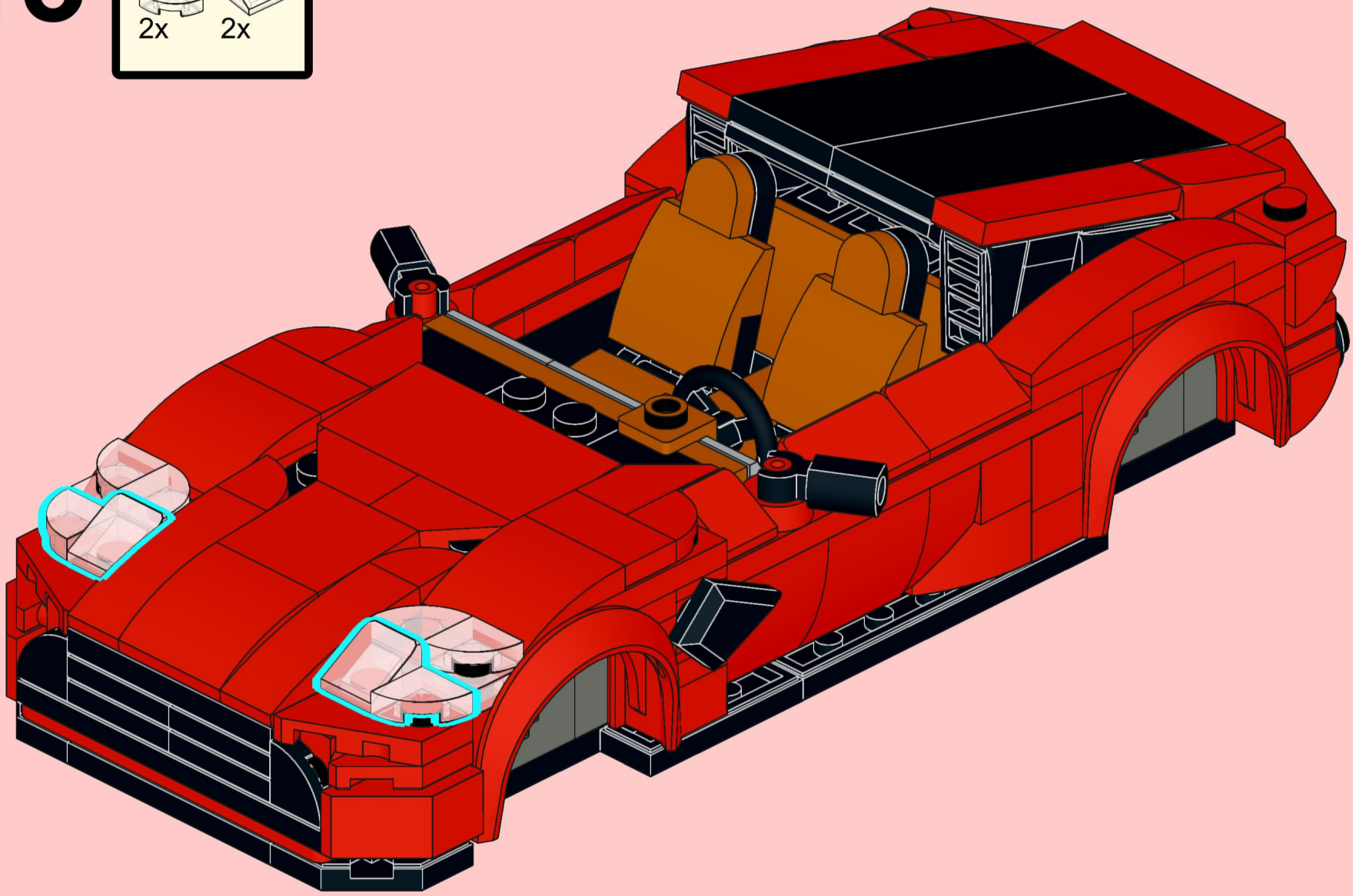

114

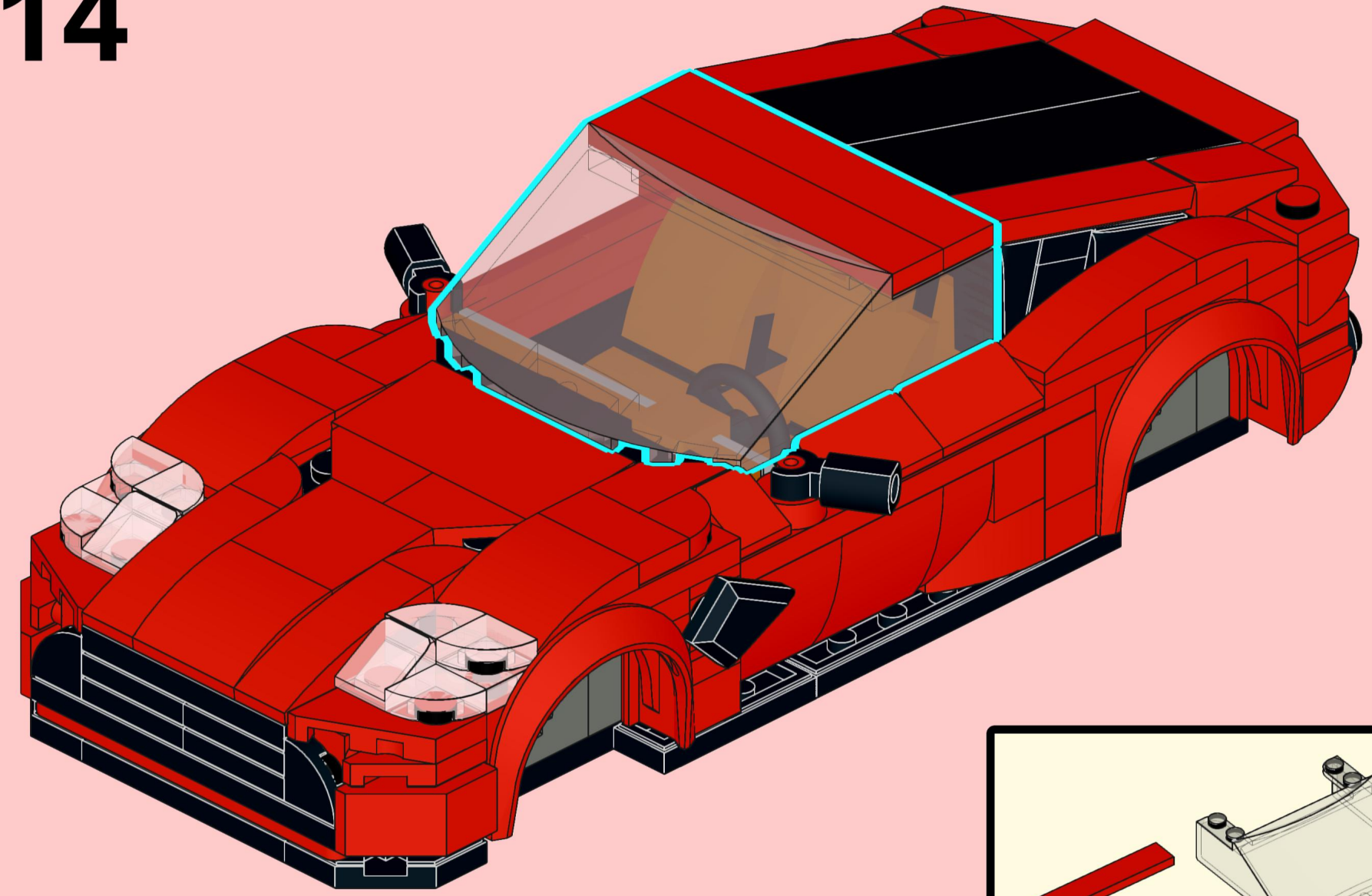

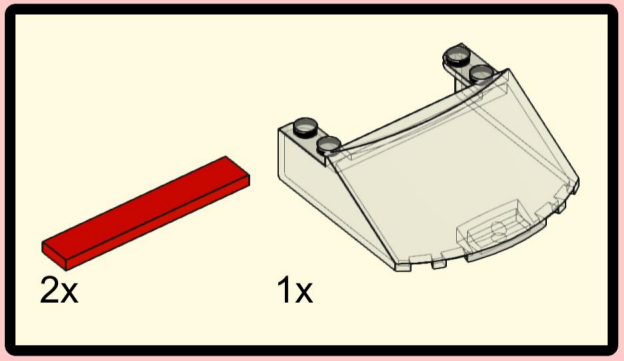

115

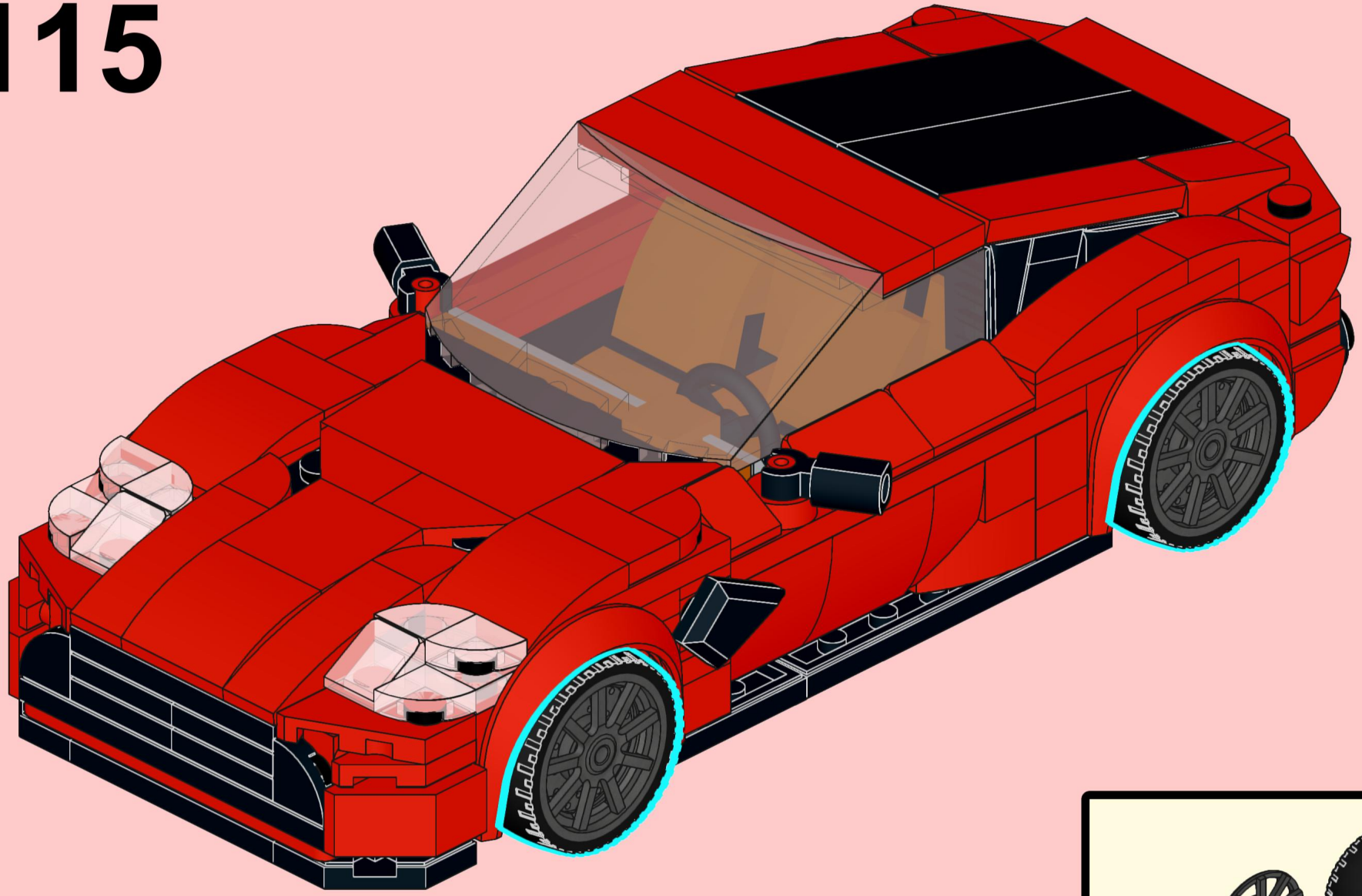

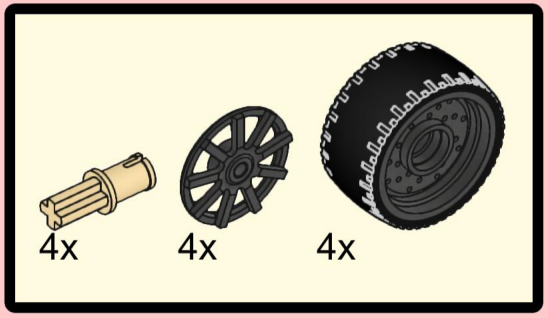

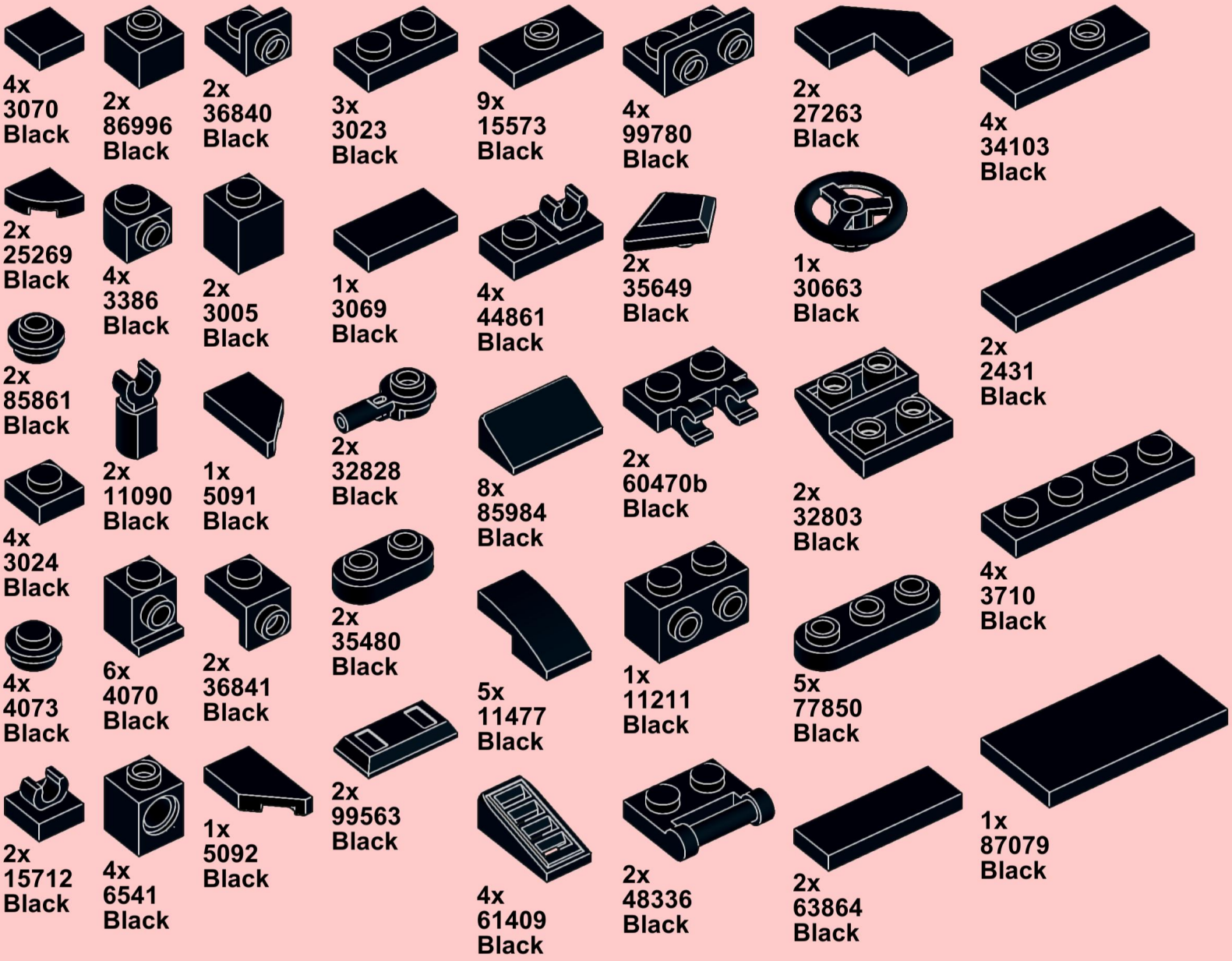
4x
3070
Black
2x
86996
Black
2x
36840
Black
3x
3023
Black
9x
15573
Black
4x
99780
Black
2x
27263
Black
4x
34103
Black
2x
25269
Black
4x
3386
Black
2x
3005
Black
1x
3069
Black
4x
44861
Black
2x
35649
Black
1x
30663
Black
2x
2431
Black
2x
85861
Black
2x
11090
Black
1x
5091
Black
2x
32828
Black
8x
85984
Black
2x
60470b
Black
2x
32803
Black
4x
3024
Black
2x
35480
Black
4x
3710
Black
4x
4073
Black
6x
4070
Black
2x
36841
Black
5x
11477
Black
1x
11211
Black
5x
77850
Black
2x
99563
Black
2x
15712
Black
4x
6541
Black
1x
5092
Black
4x
61409
Black
2x
48336
Black
2x
63864
Black
1x
87079
Black



1x
3020
Black

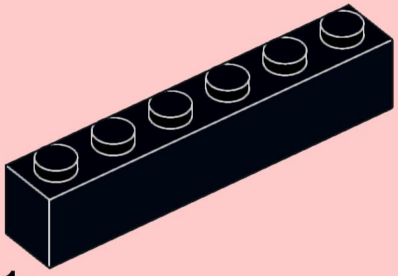

1x
3009
Black

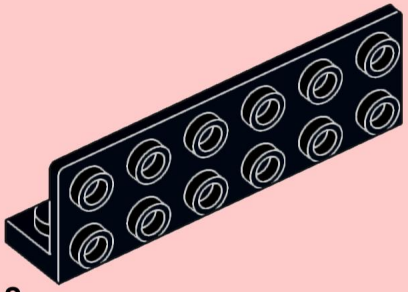

2x
5090
Black



2x
6541
Dark Bluish Gray



3x
6636
Black

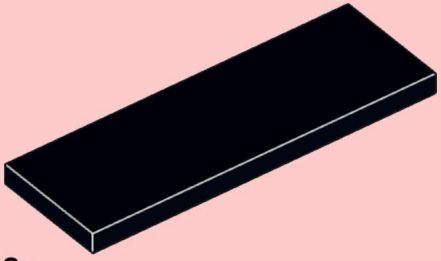

2x
69729
Black

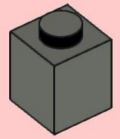

4x
3005
Dark Bluish Gray



1x
3666
Black

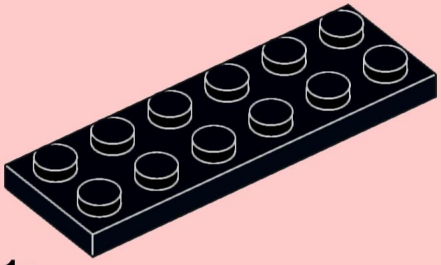

1x
3795
Black

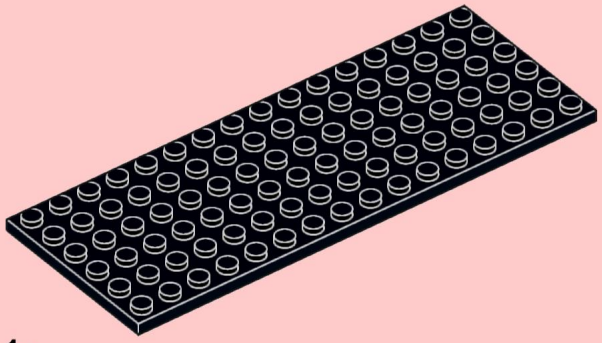

1x
3027
Black



2x
87087
Dark Bluish Gray



4x
4070
Dark Bluish Gray

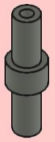

1x
78258
Dark Bluish Gray

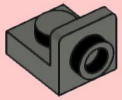

2x
36840
Dark Bluish Gray



1x
85984
Dark Bluish Gray

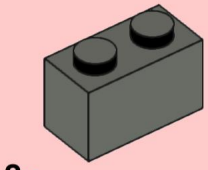

2x
3004
Dark Bluish Gray

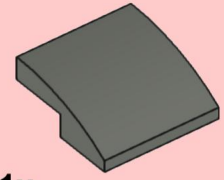

1x
15068
Dark Bluish Gray

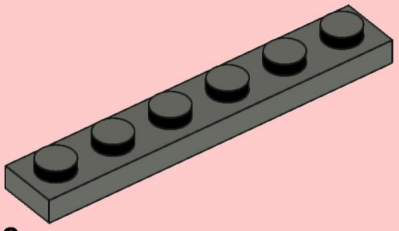

2x
3666
Dark Bluish Gray

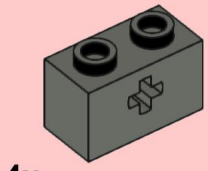

4x
32064
Dark Bluish Gray

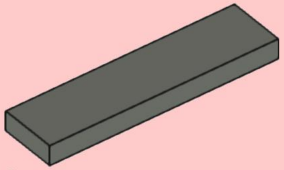

3x
2431
Dark Bluish Gray



2x
85861
Light Bluish Gray

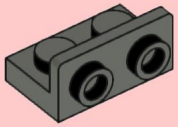

2x
99780
Dark Bluish Gray

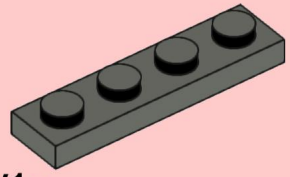

1x
3710
Dark Bluish Gray



2x
20482
Light Bluish Gray

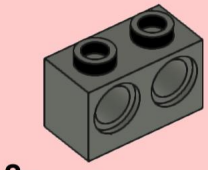

2x
32000
Dark Bluish Gray

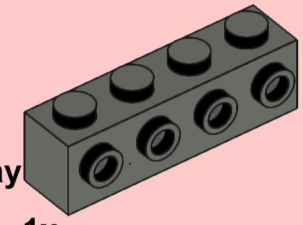

1x
30414
Dark Bluish Gray



1x
54200
Light Bluish Gray

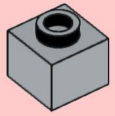

2x
86996
Light Bluish Gray

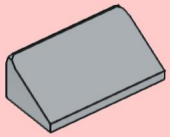

2x
85984
Light Bluish Gray

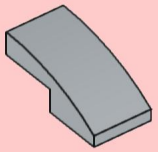

3x
11477
Light Bluish Gray

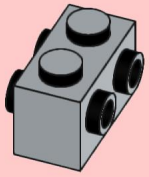

1x
52107
Light Bluish Gray

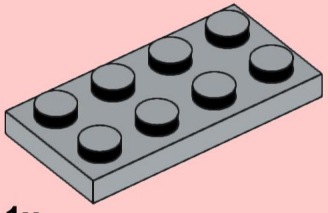

1x
3020
Light Bluish Gray



2x
24866
Dark Red

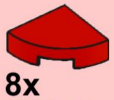

8x
25269
Red



2x
11253
Red

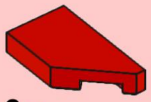

3x
5092
Red

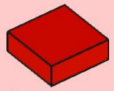

2x
3070
Red



2x
36840
Red

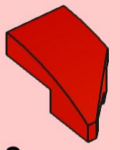

2x
29120
Red

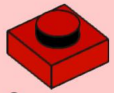

6x
3024
Red



2x
4070
Red

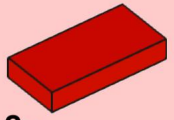

2x
3069
Red



4x
54200
Red



2x
87087
Red

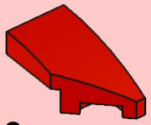

2x
29119
Red



2x
20482
Red



3x
5091
Red

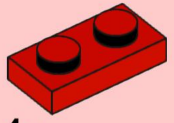

4x
3023
Red

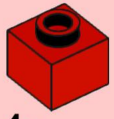

4x
86996
Red

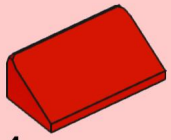

4x
85984
Red

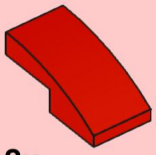

2x
11477
Red

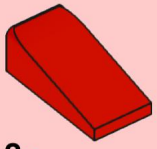

2x
5404
Red

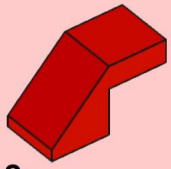

2x
28192
Red

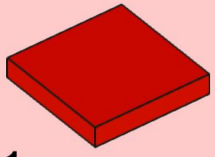

1x
3068
Red

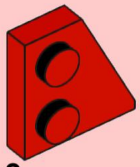

3x
24307
Red

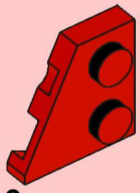

3x
24299
Red

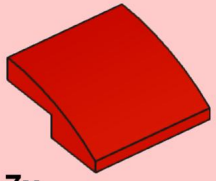

7x
15068
Red

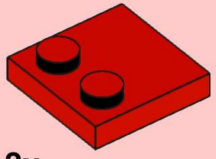

2x
33909
Red

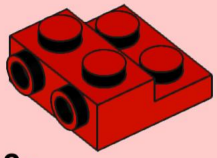

2x
99206
Red

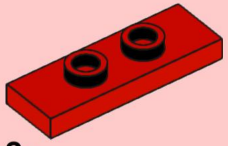

2x
34103
Red

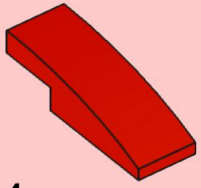

4x
7302
Red

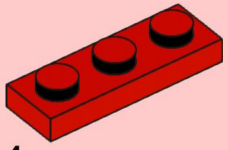

4x
3623
Red

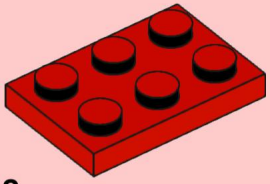

2x
3021
Red

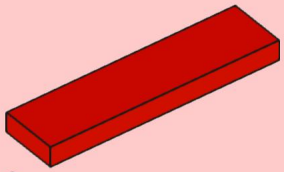

3x
2431
Red

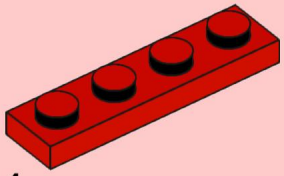

4x
3710
Red

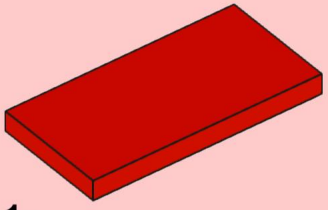

1x
87079
Red

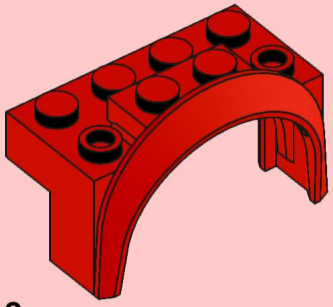

2x
3387
Red

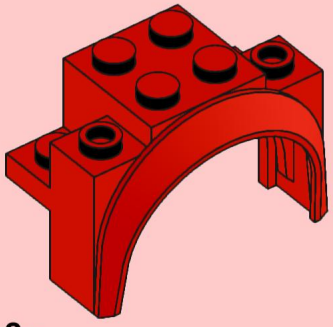

2x
18974
Red

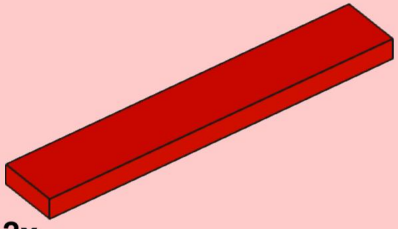

2x
6636
Red

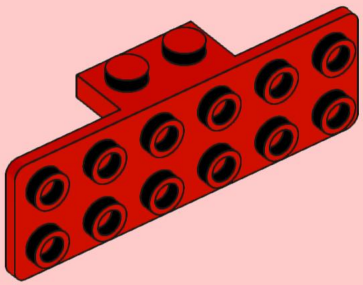

1x
6970
Red

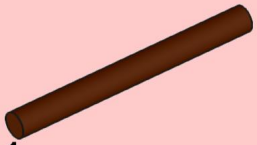

1x
30374
Reddish Brown

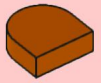

2x
24246
Dark Orange

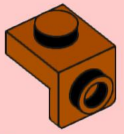

1x
36841
Dark Orange

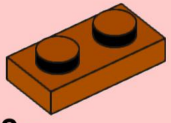

2x
3023
Dark Orange

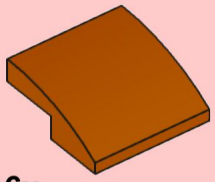

6x
15068
Dark Orange

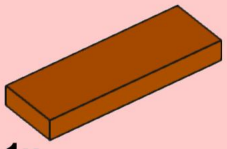

1x
63864
Dark Orange

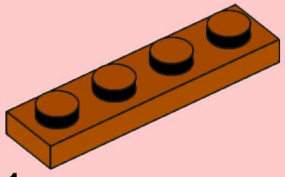

1x
3710
Dark Orange

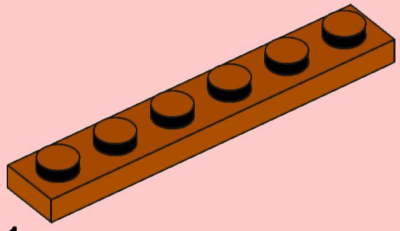

1x
3666
Dark Orange

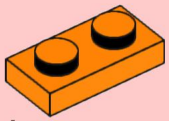

1x
3023
Orange

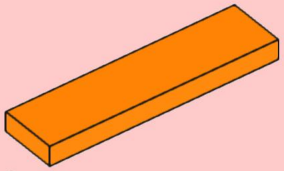

3x
2431
Orange



5x
35480
Dark Tan

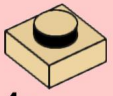

4x
3024
Tan



4x
4070
Tan

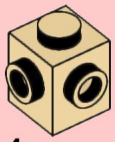

4x
26604
Tan

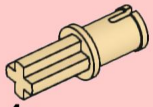

4x
3749
Tan

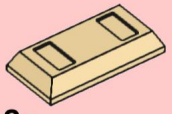

2x
99563
Tan

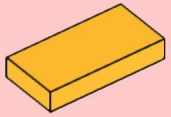

1x
3069
Bright Light Orange

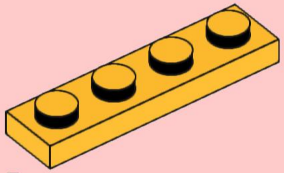

5x
3710
Bright Light Orange

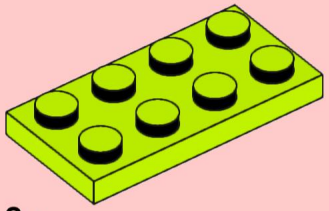

2x
3020
Lime



4x
20482
Yellowish Green



4x
3386
Light Aqua

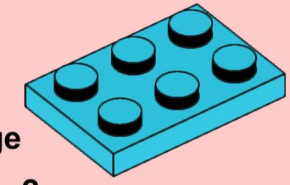

2x
3021
Medium Azure

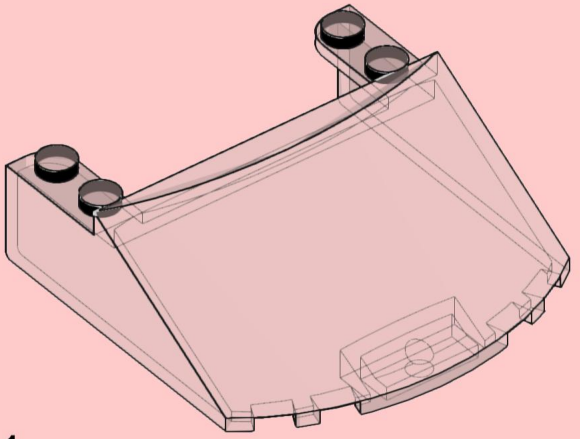

1x
65632
Trans-Black



6x
25269
Trans-Clear



2x
54200
Trans-Clear



6x
79194
Trans-Clear

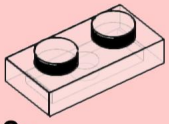

2x
3023
Trans-Clear



4x
72210b
Pearl Dark Gray



4x
72206pb01
Pearl Dark Gray