1



2

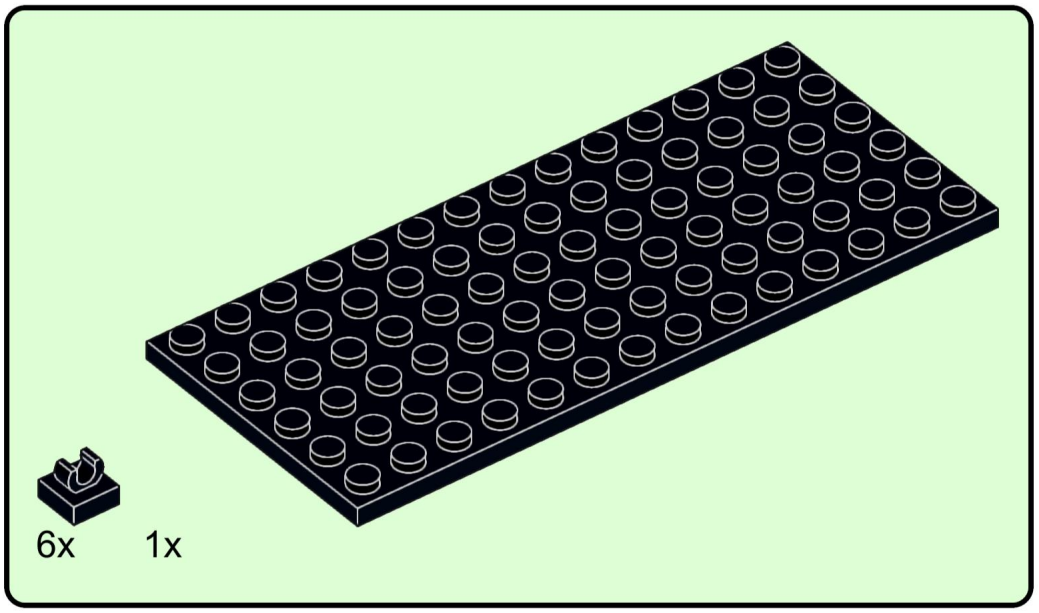

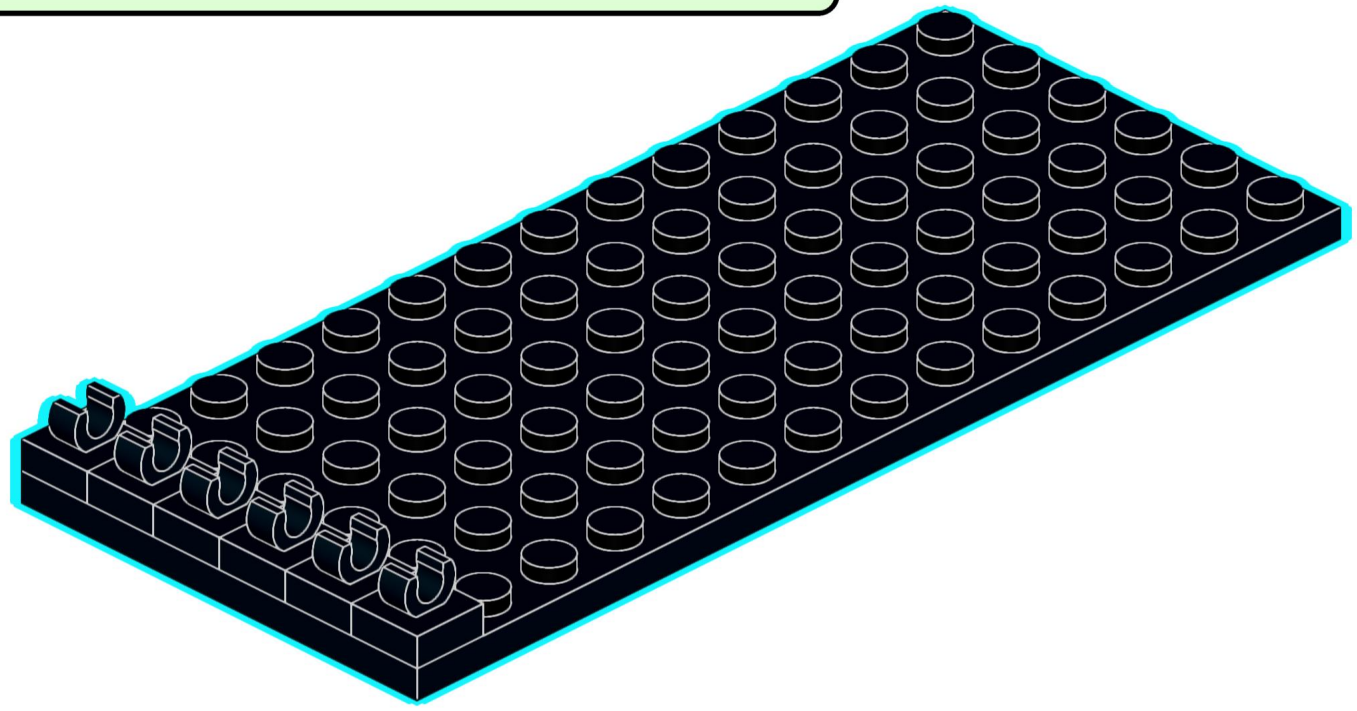

3

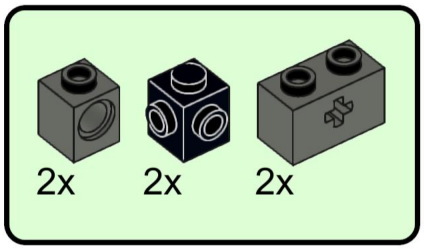

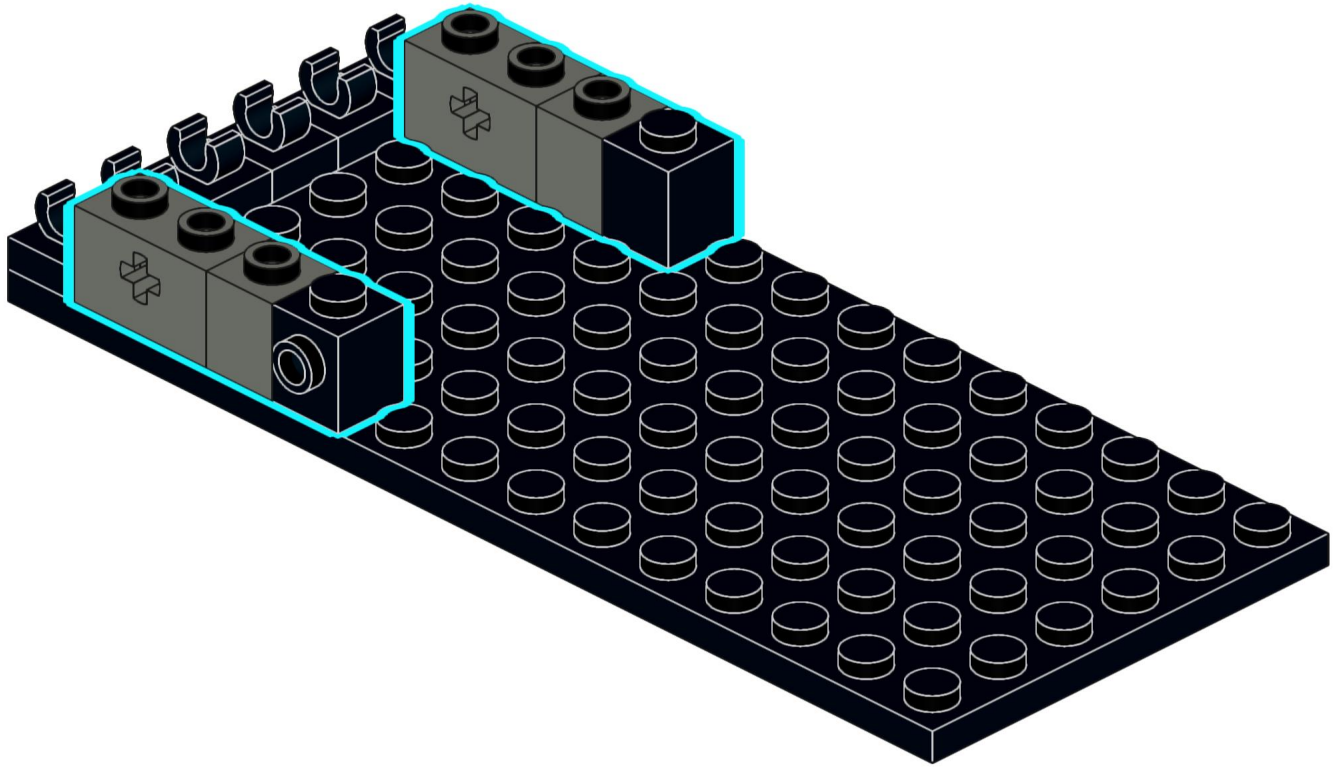

4

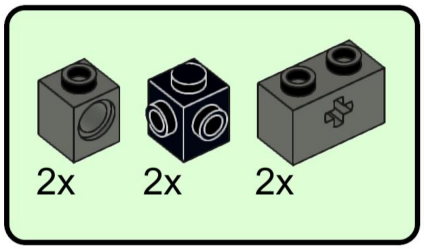

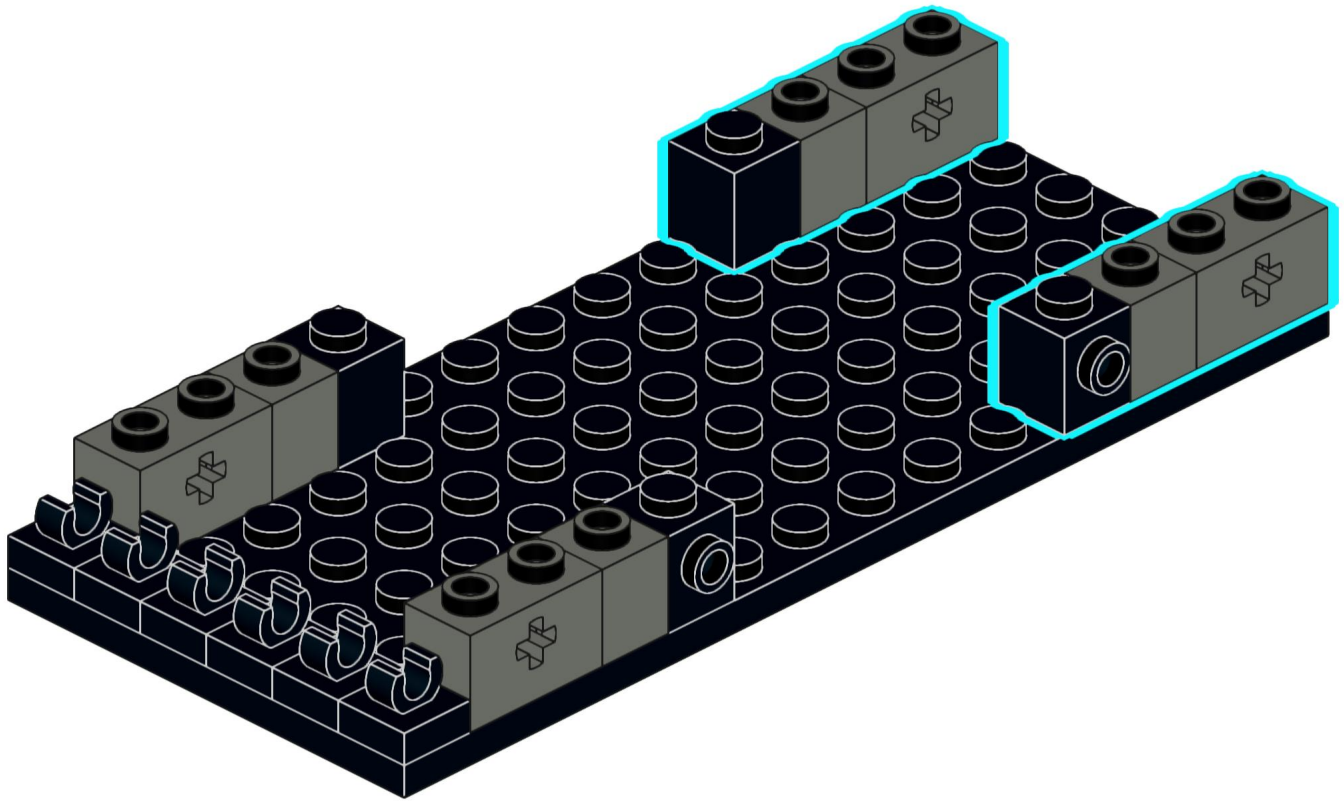

5

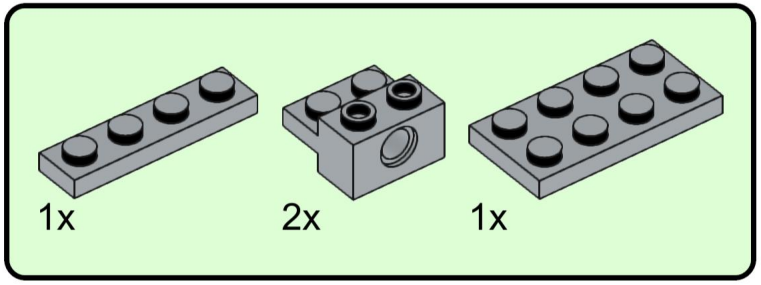

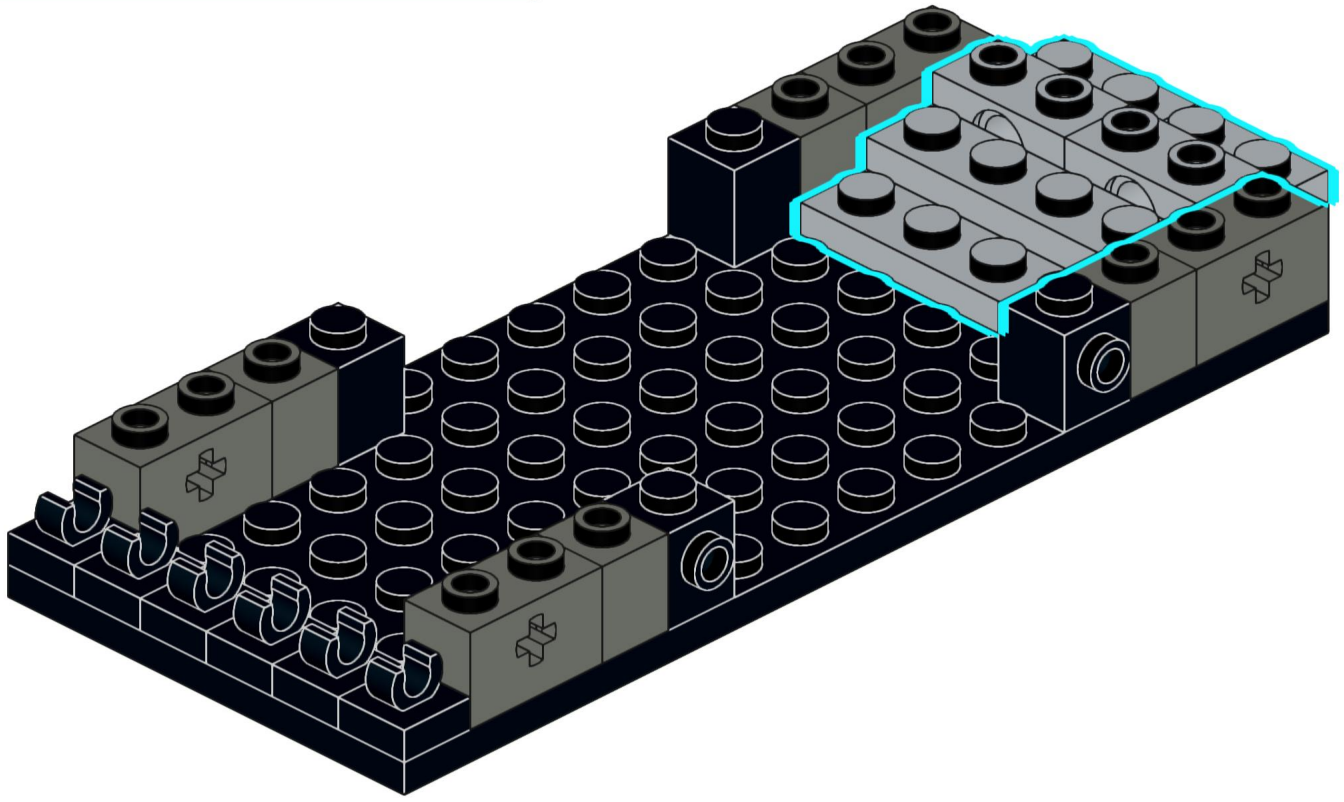

6

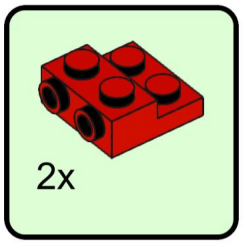

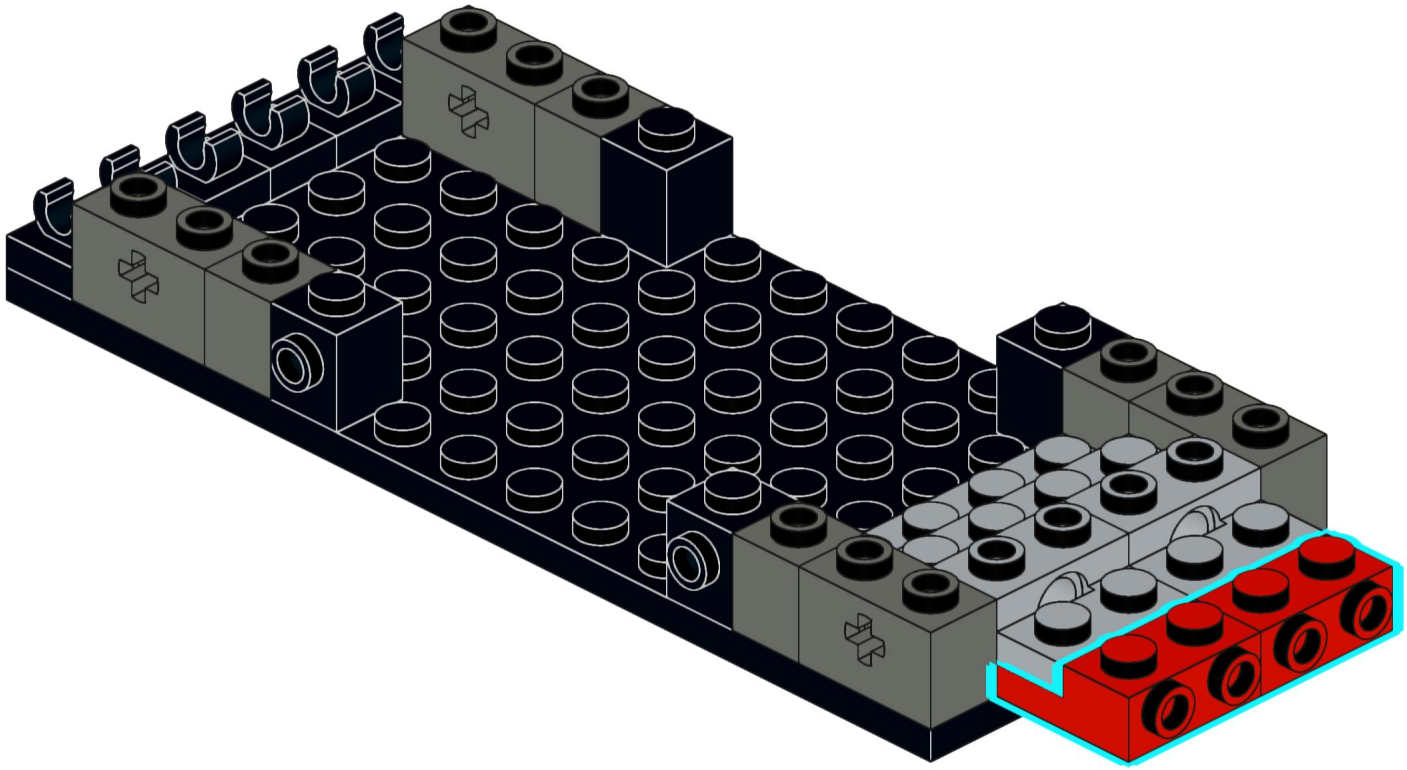

7

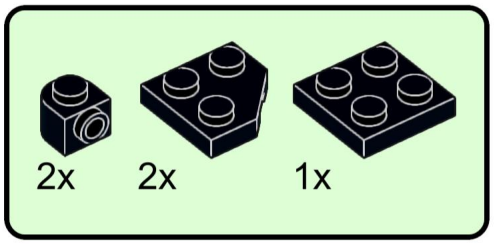

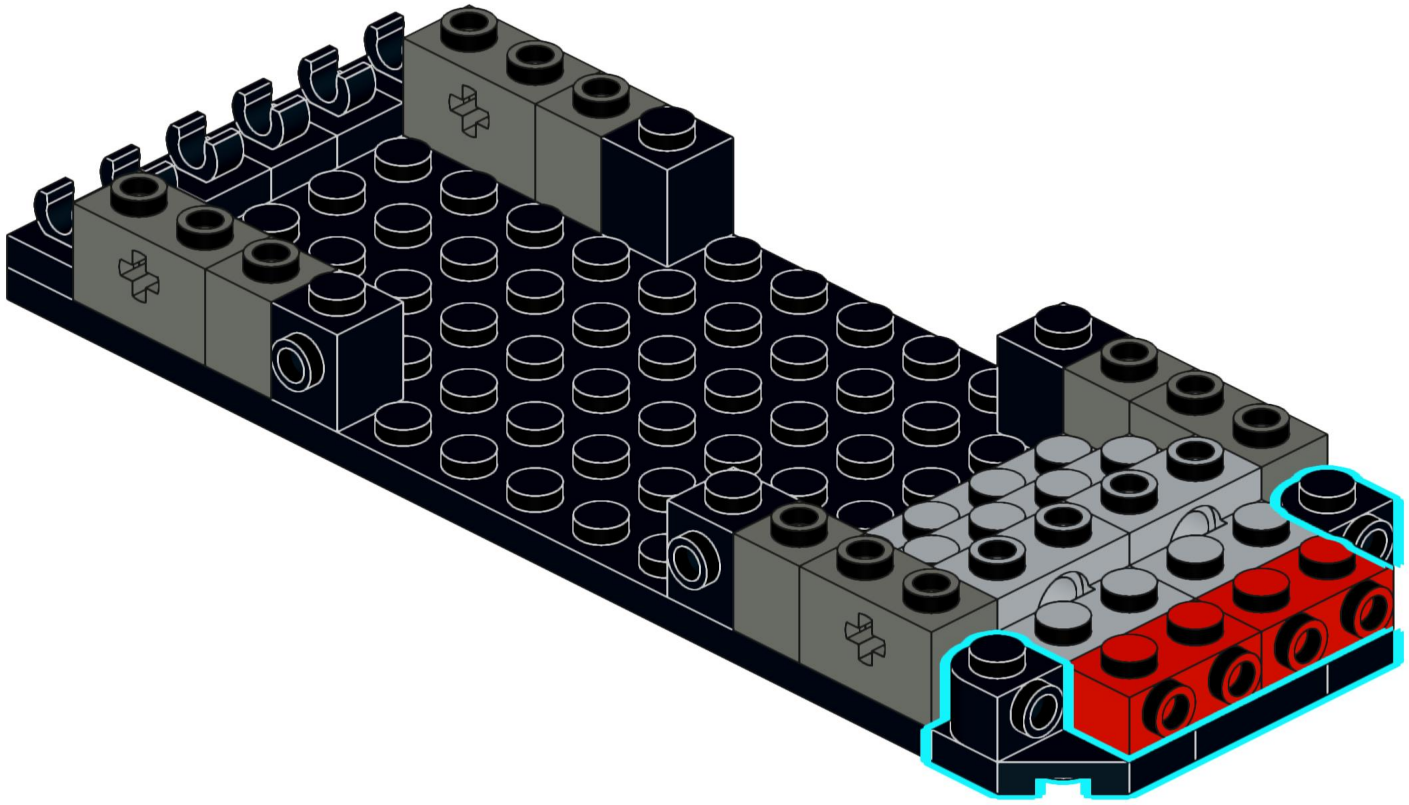

8

2x

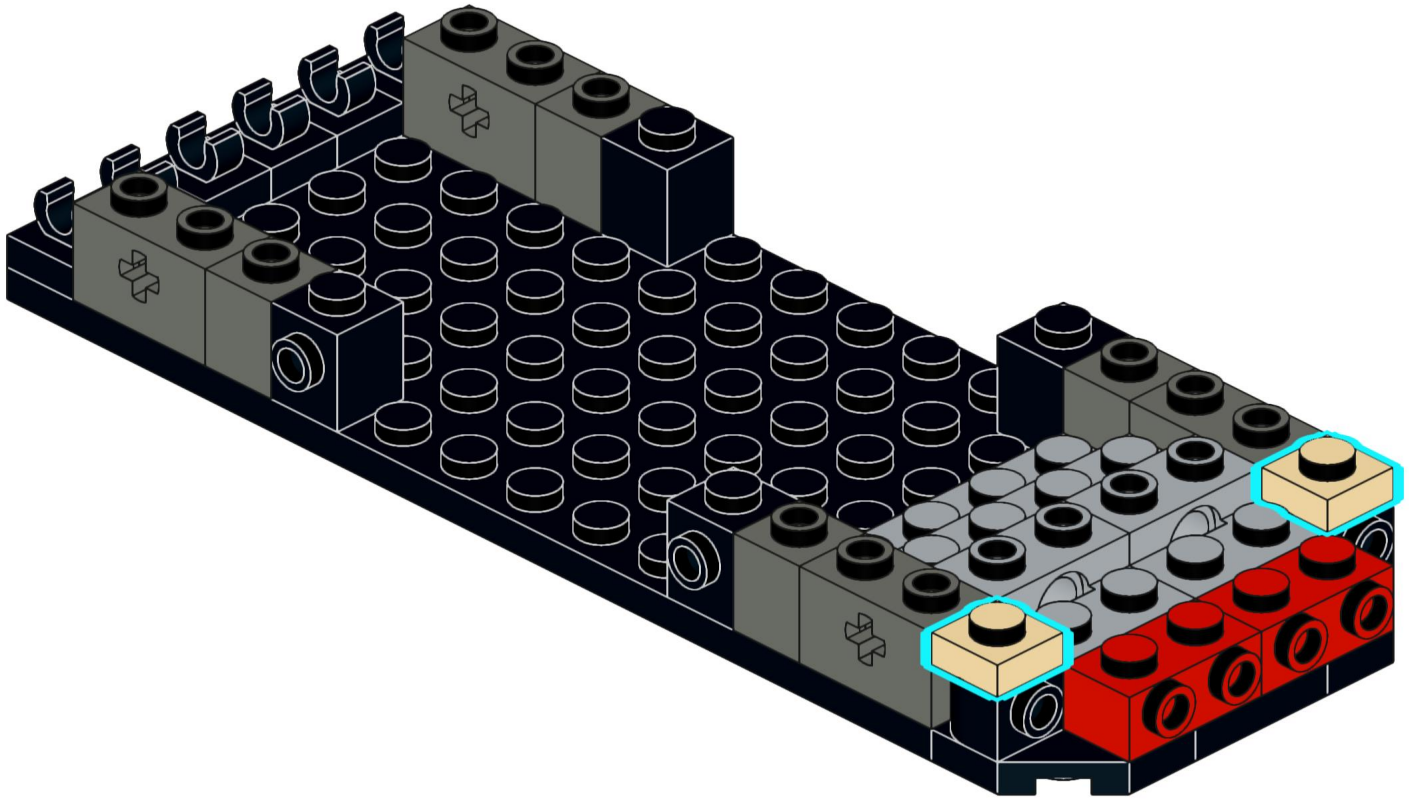

9

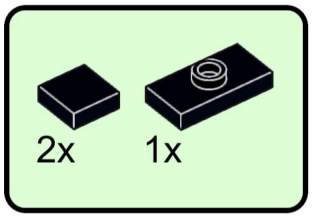

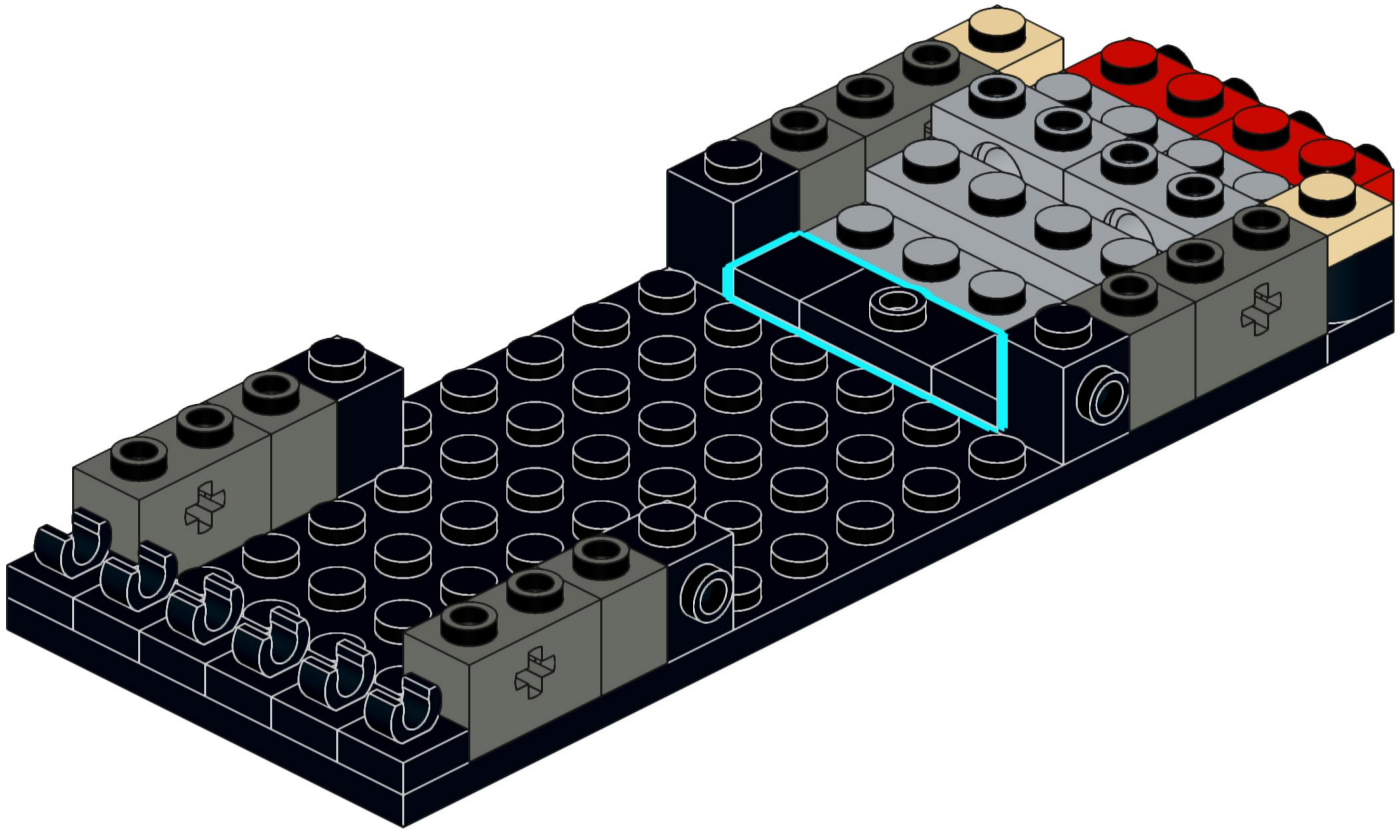

10

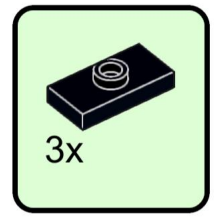

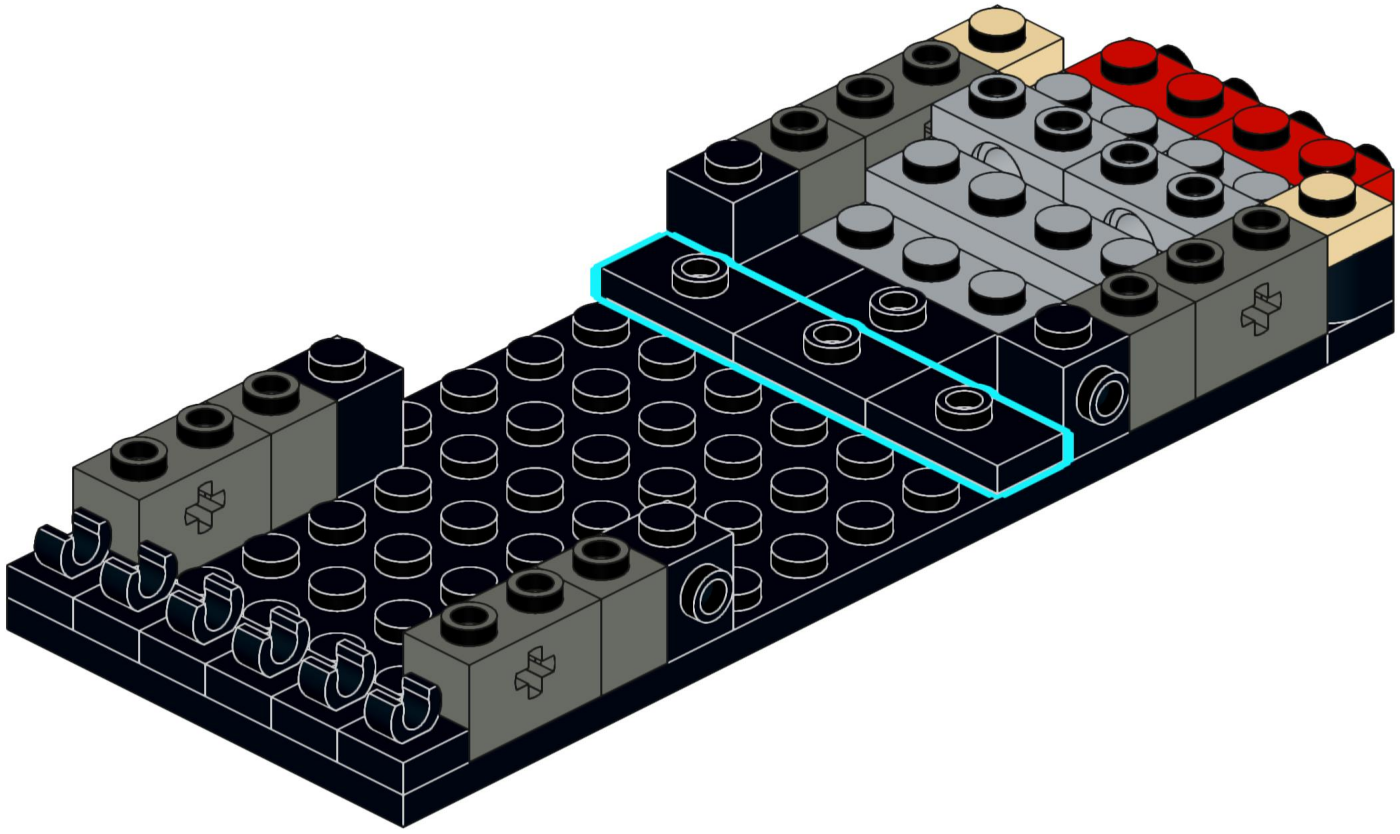

11

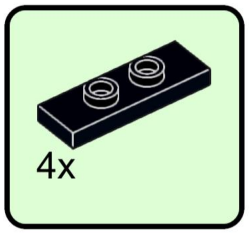

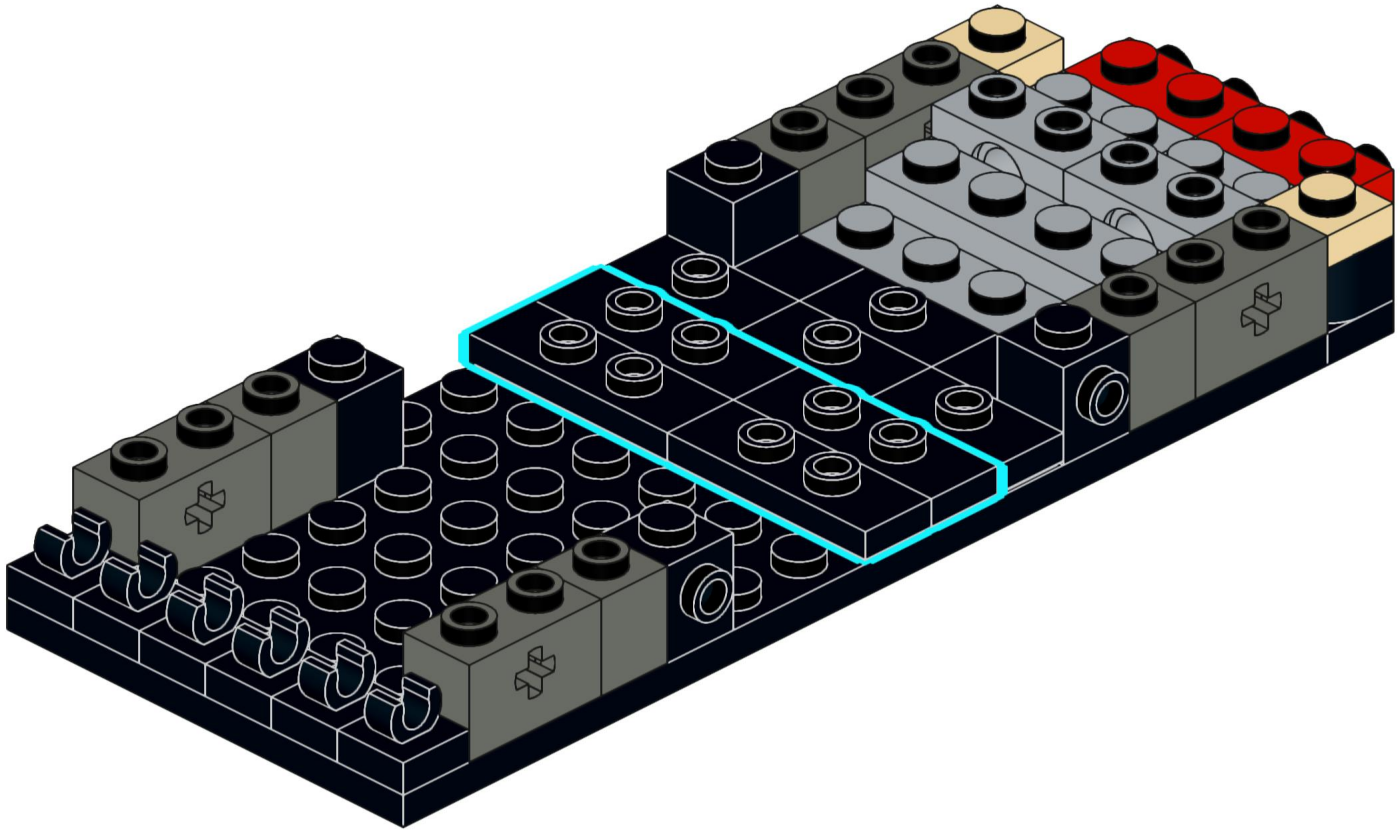

12

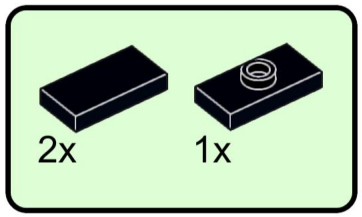

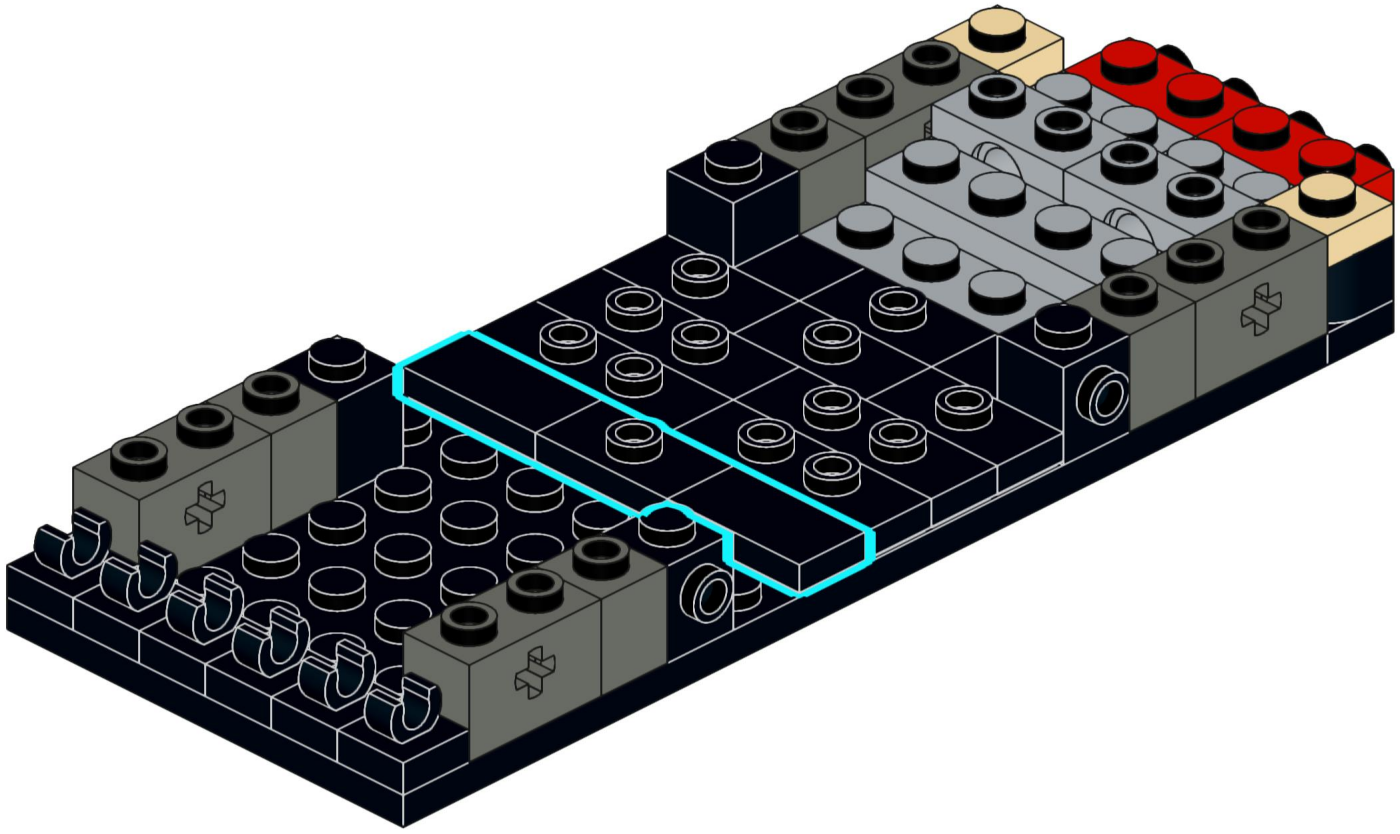

13

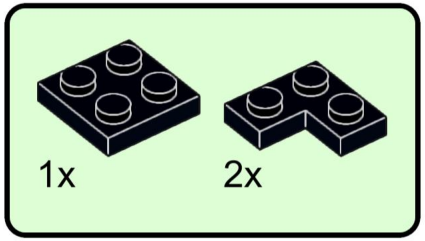

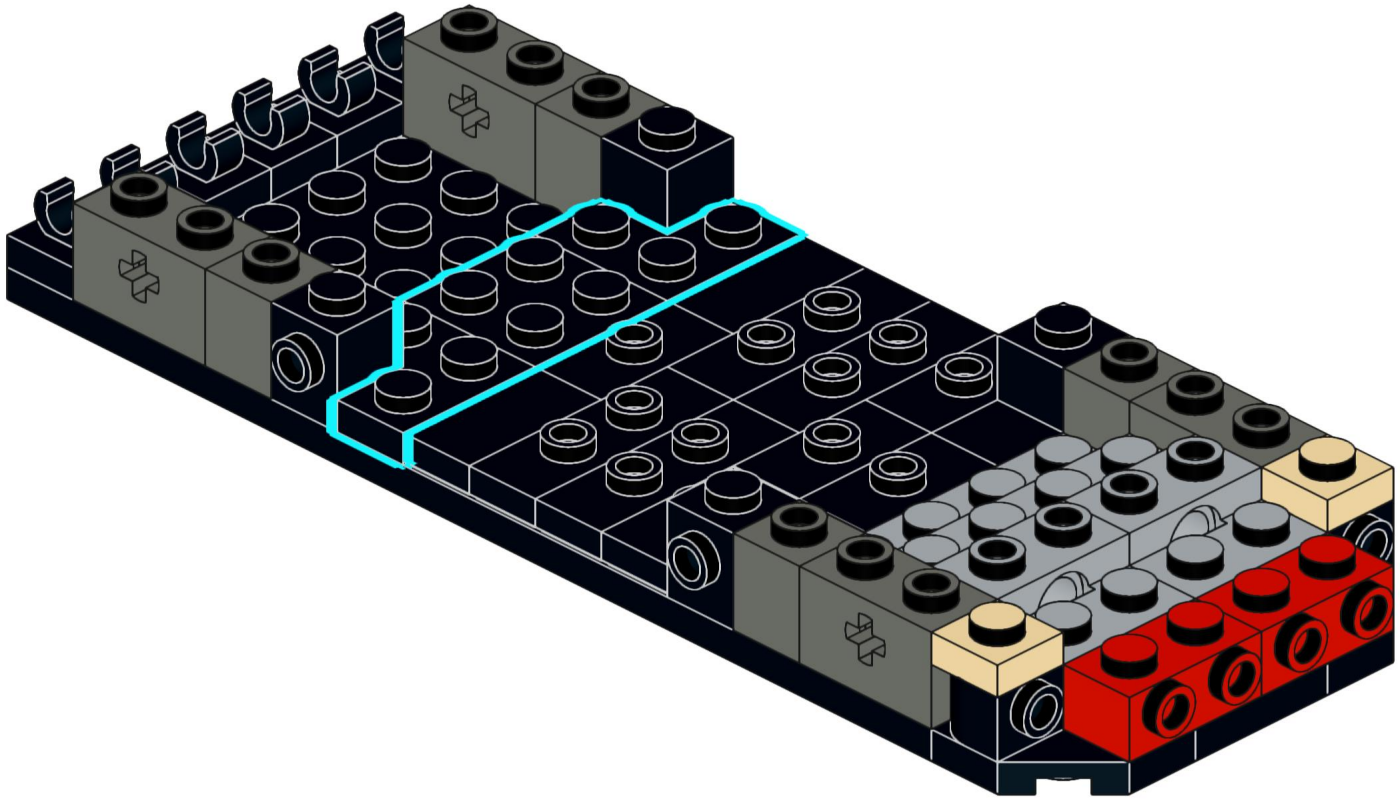

14

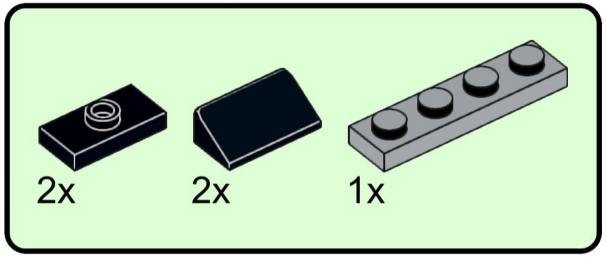

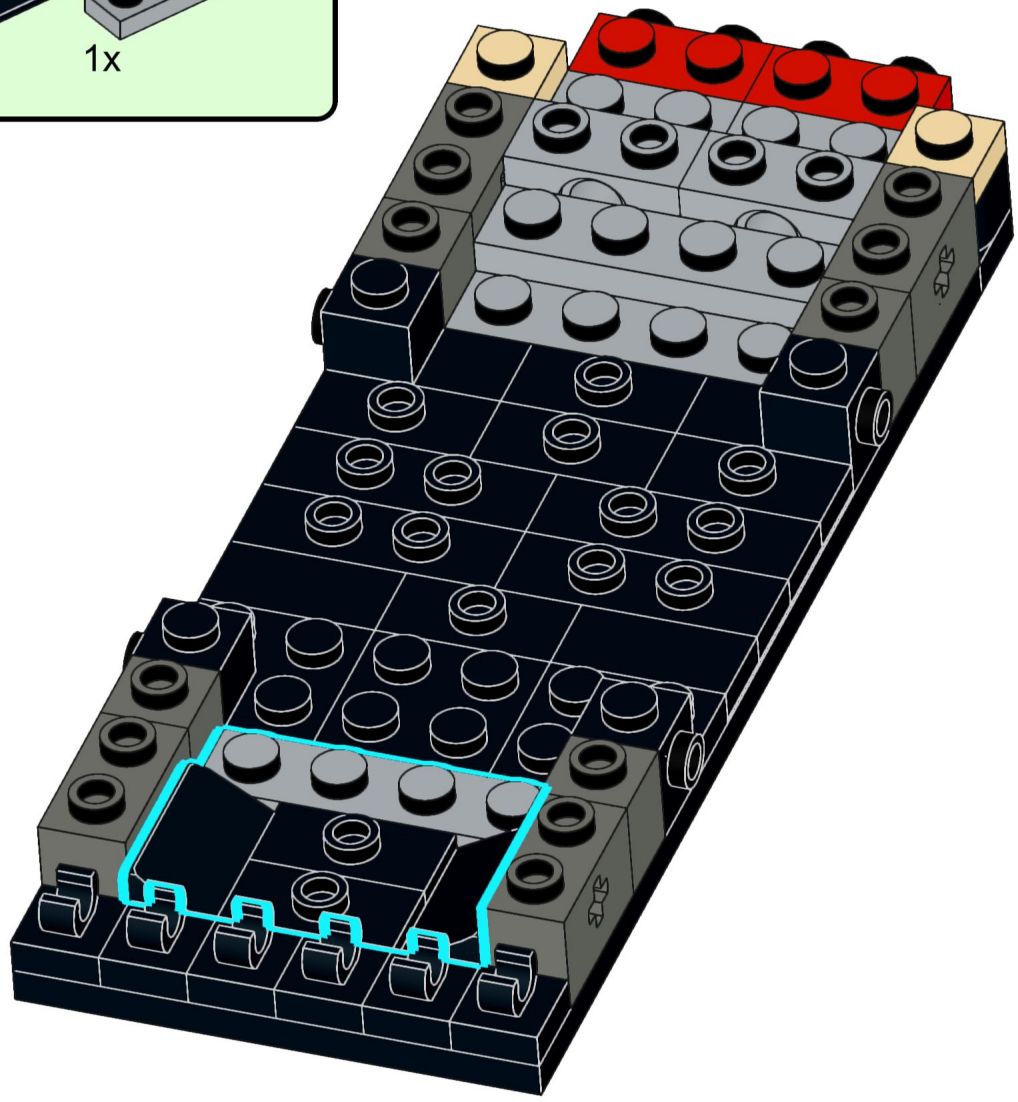

15

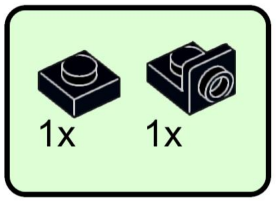

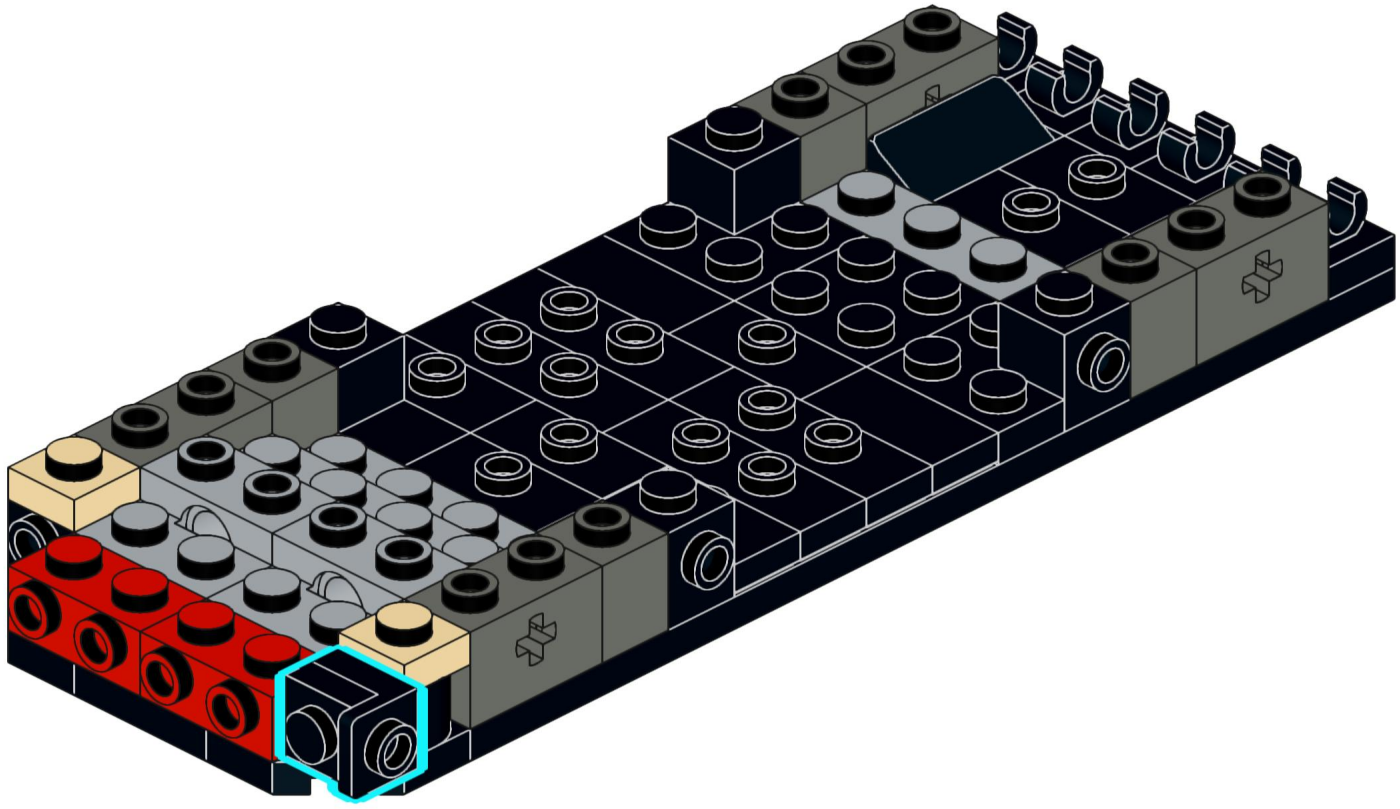

16

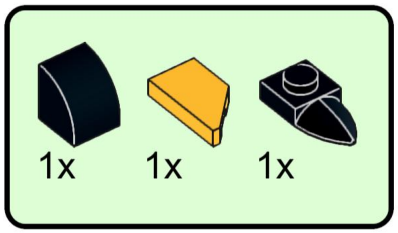

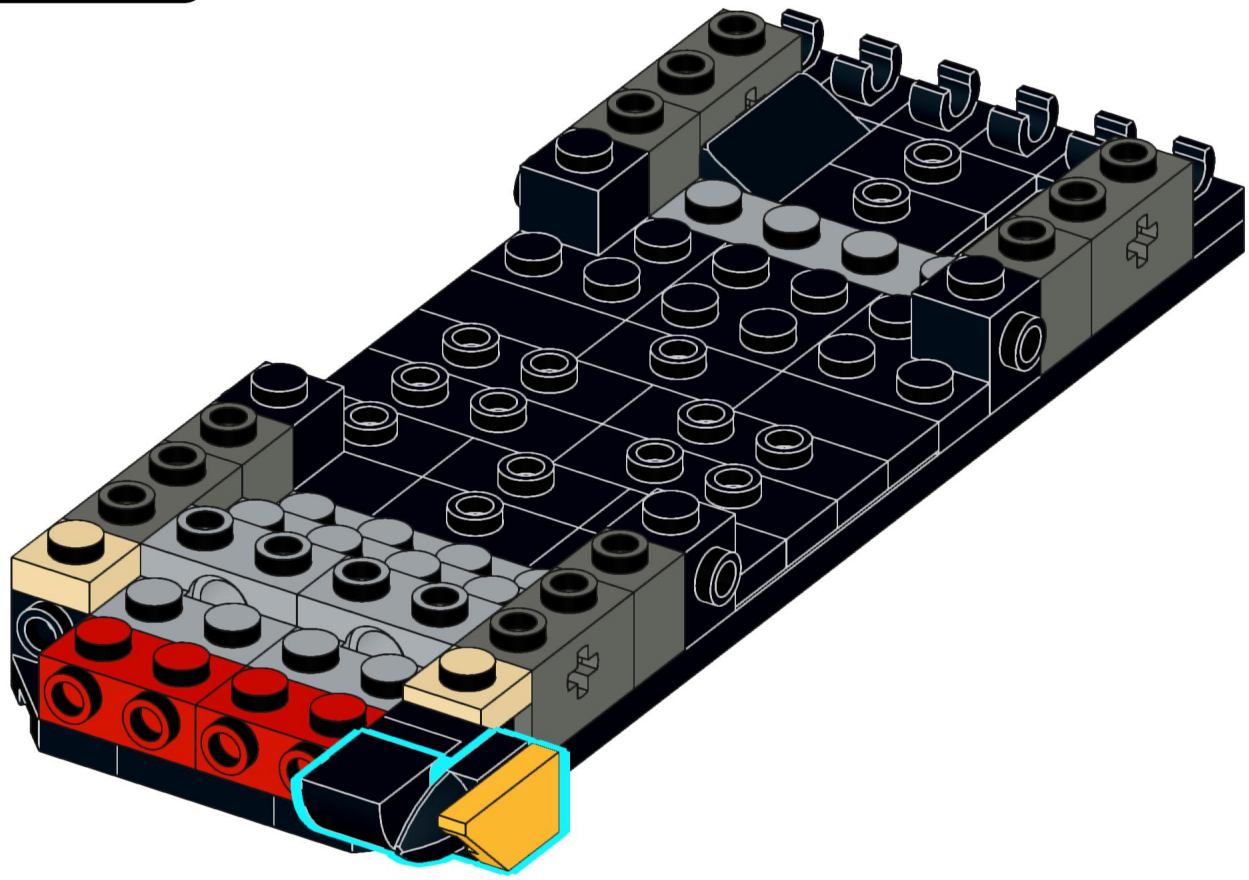

17

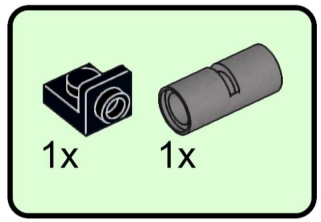

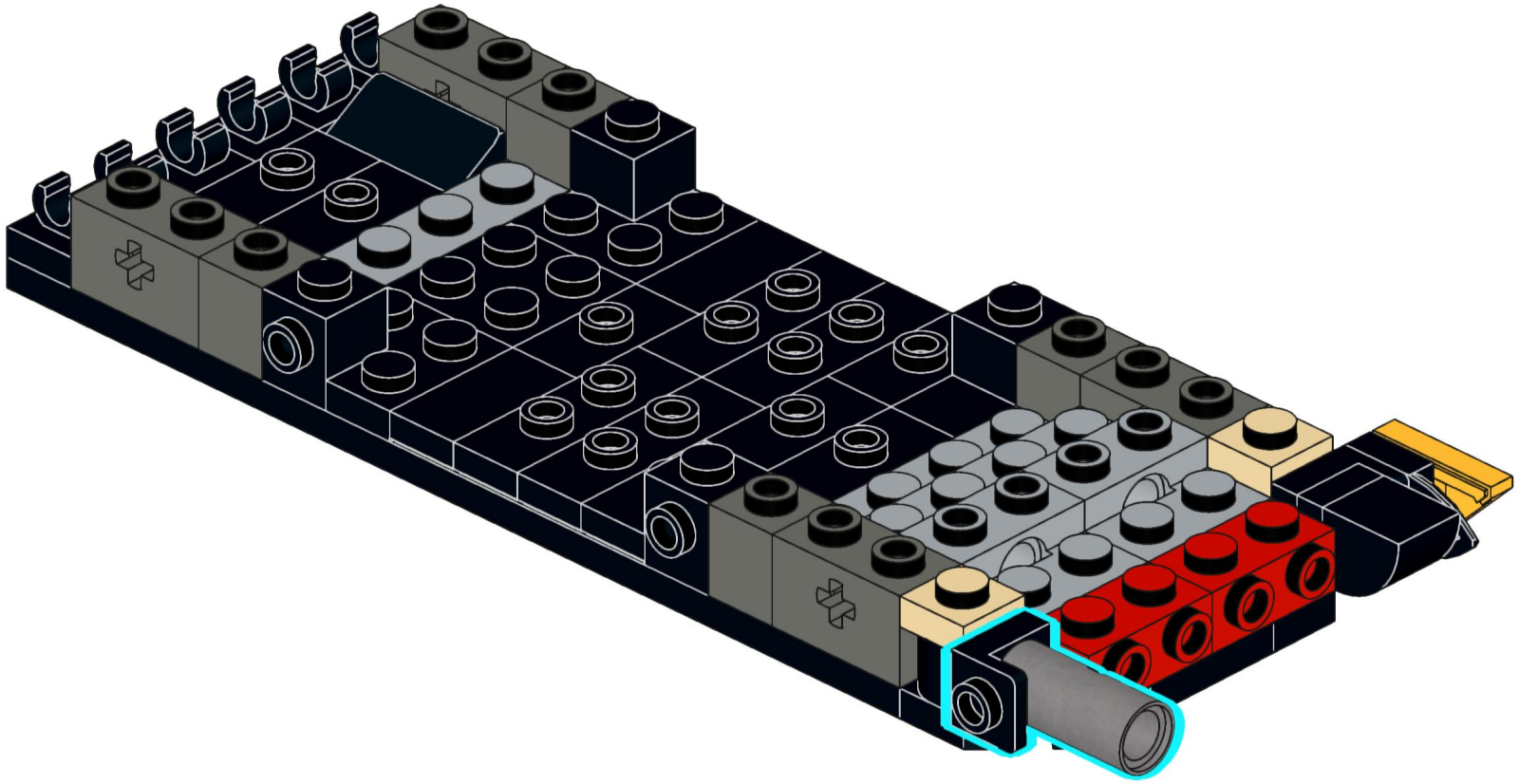

18

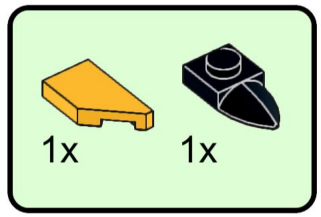

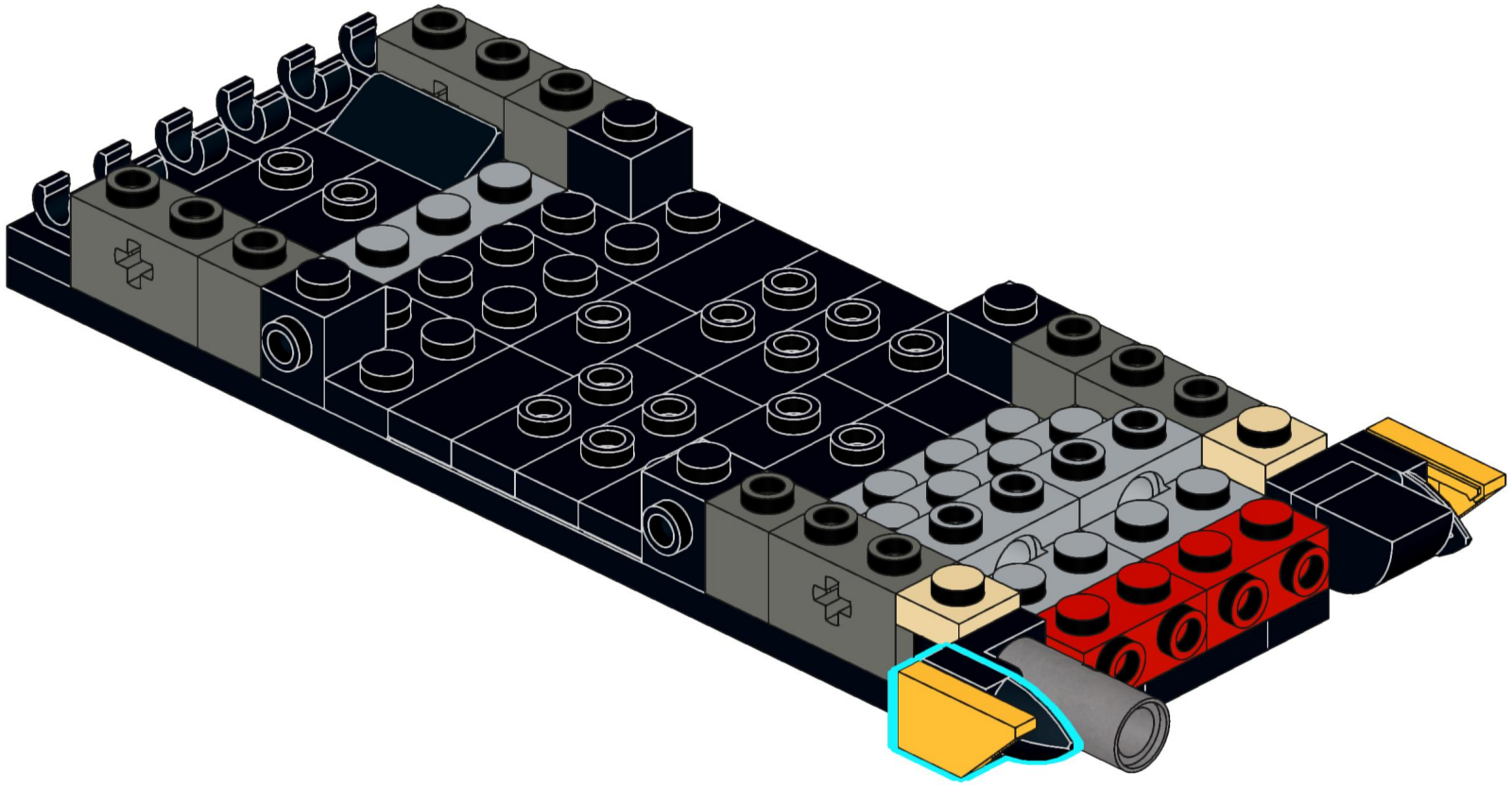

19

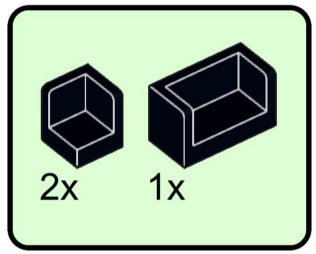

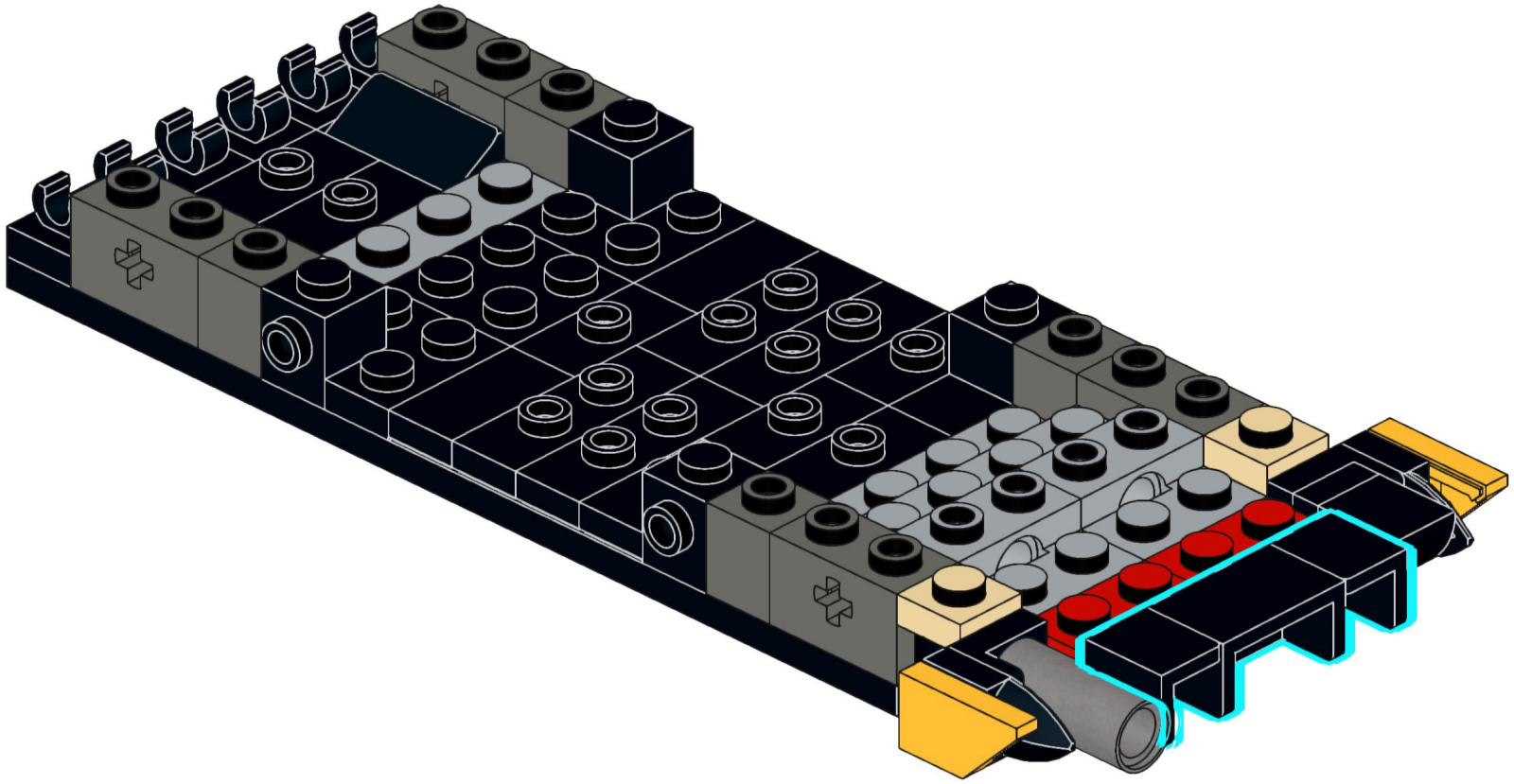

20

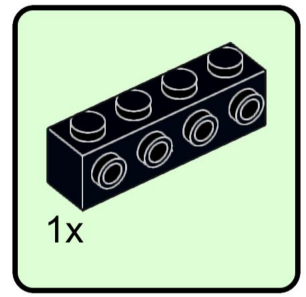

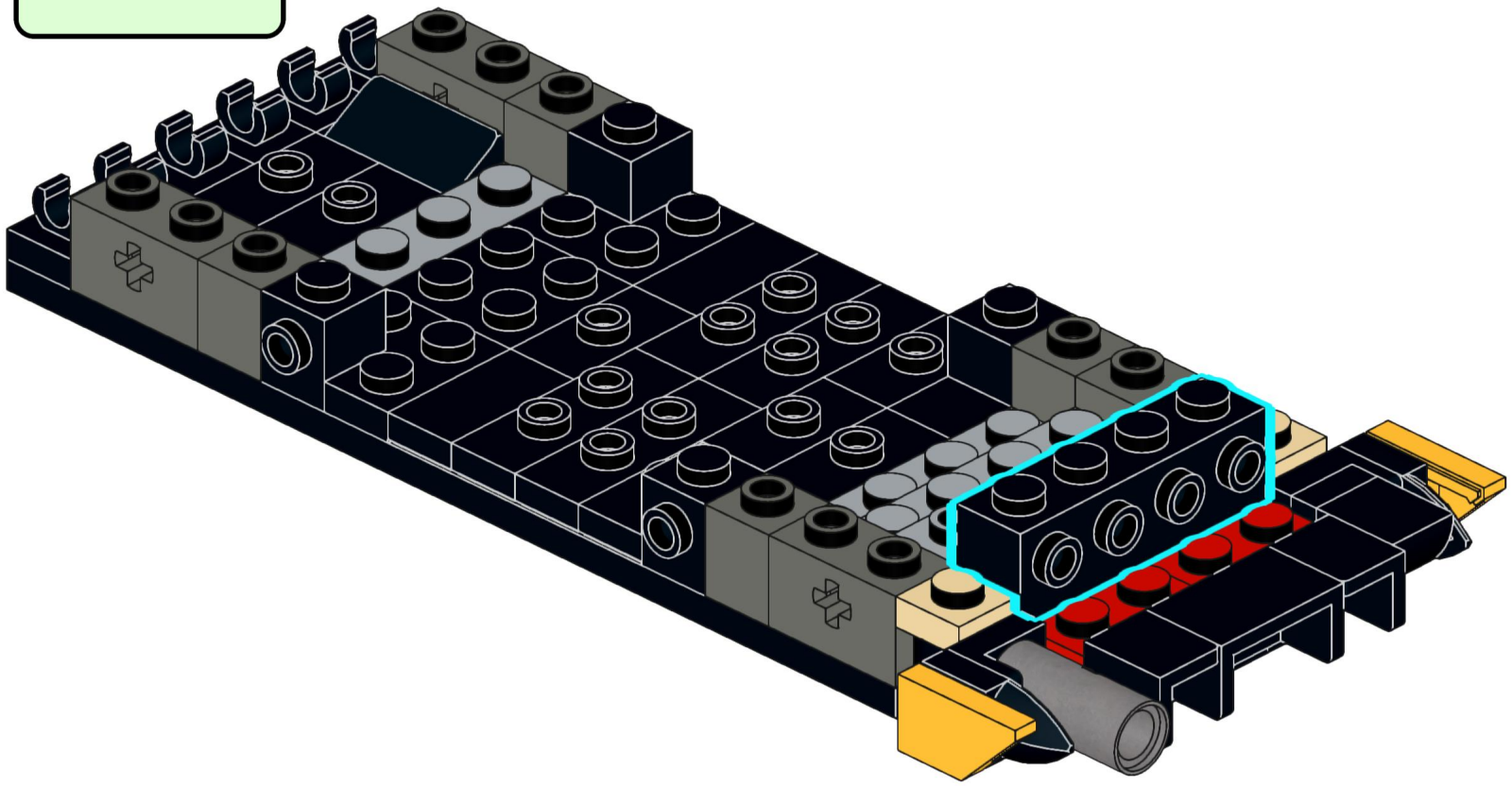

21

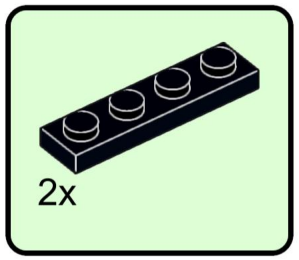

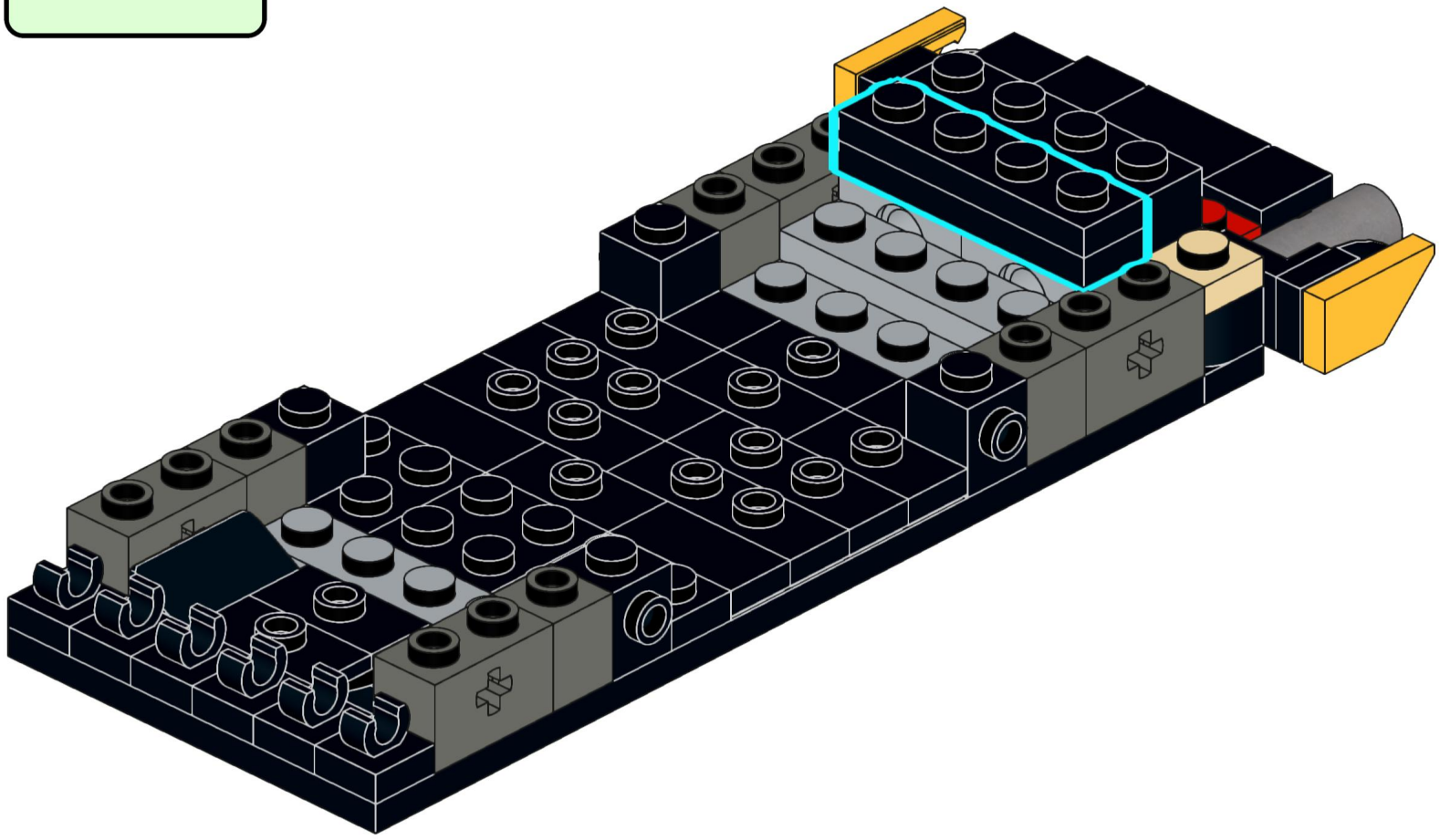

22



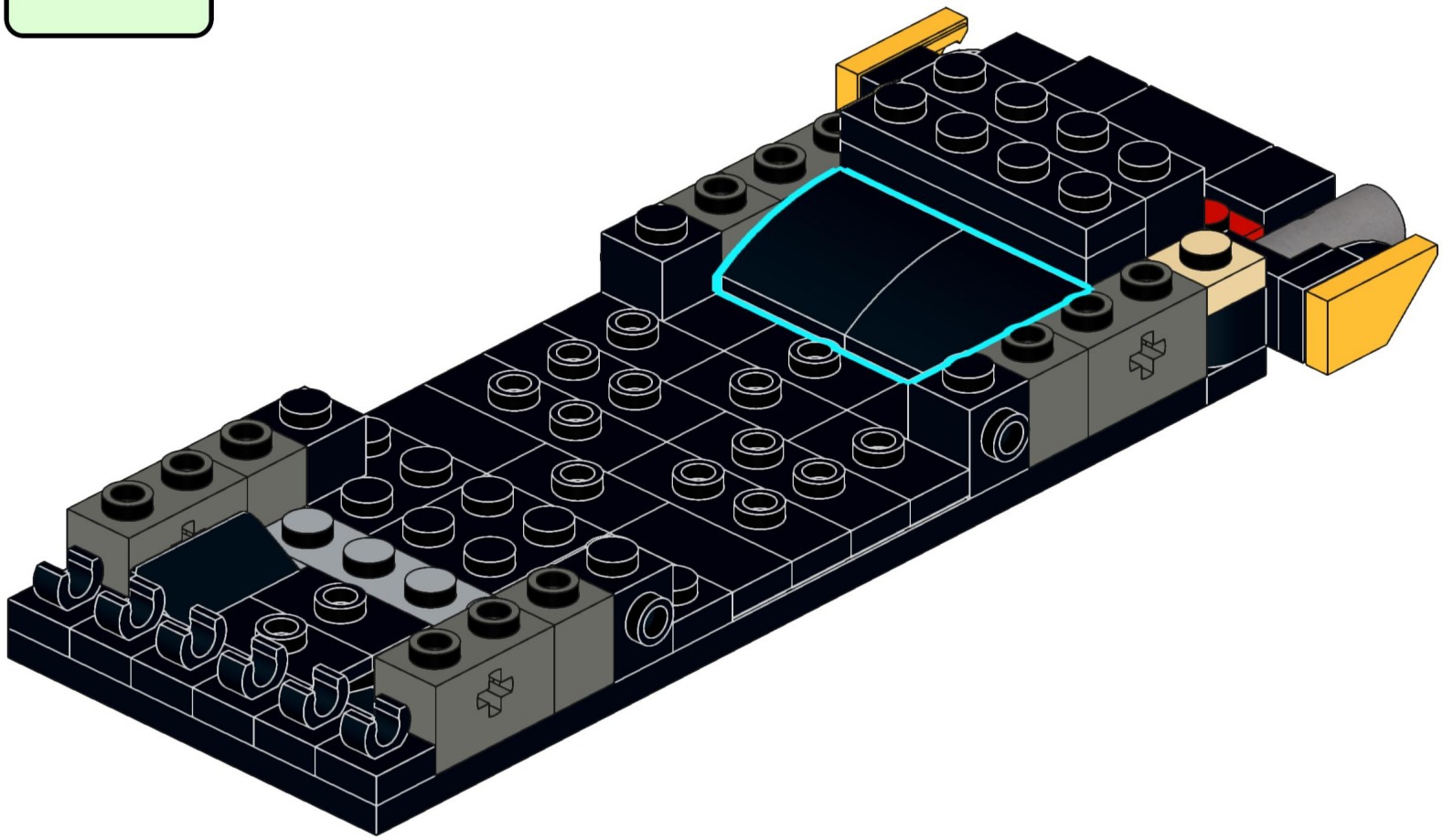

23

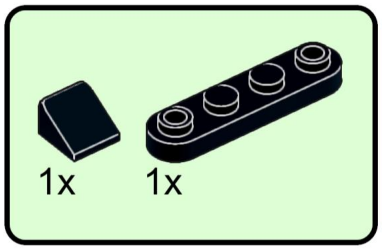

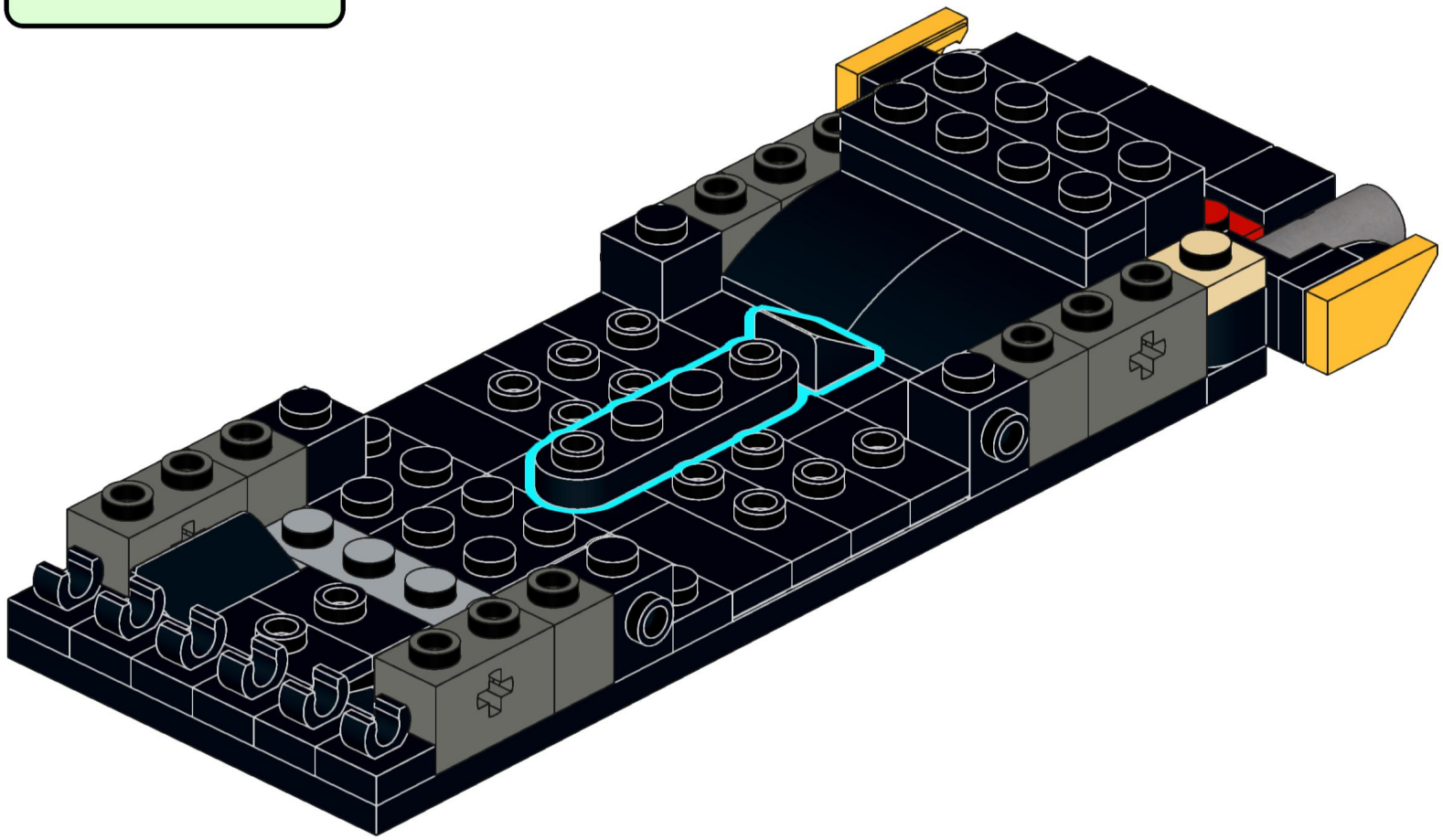

24

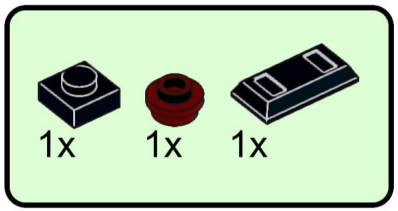

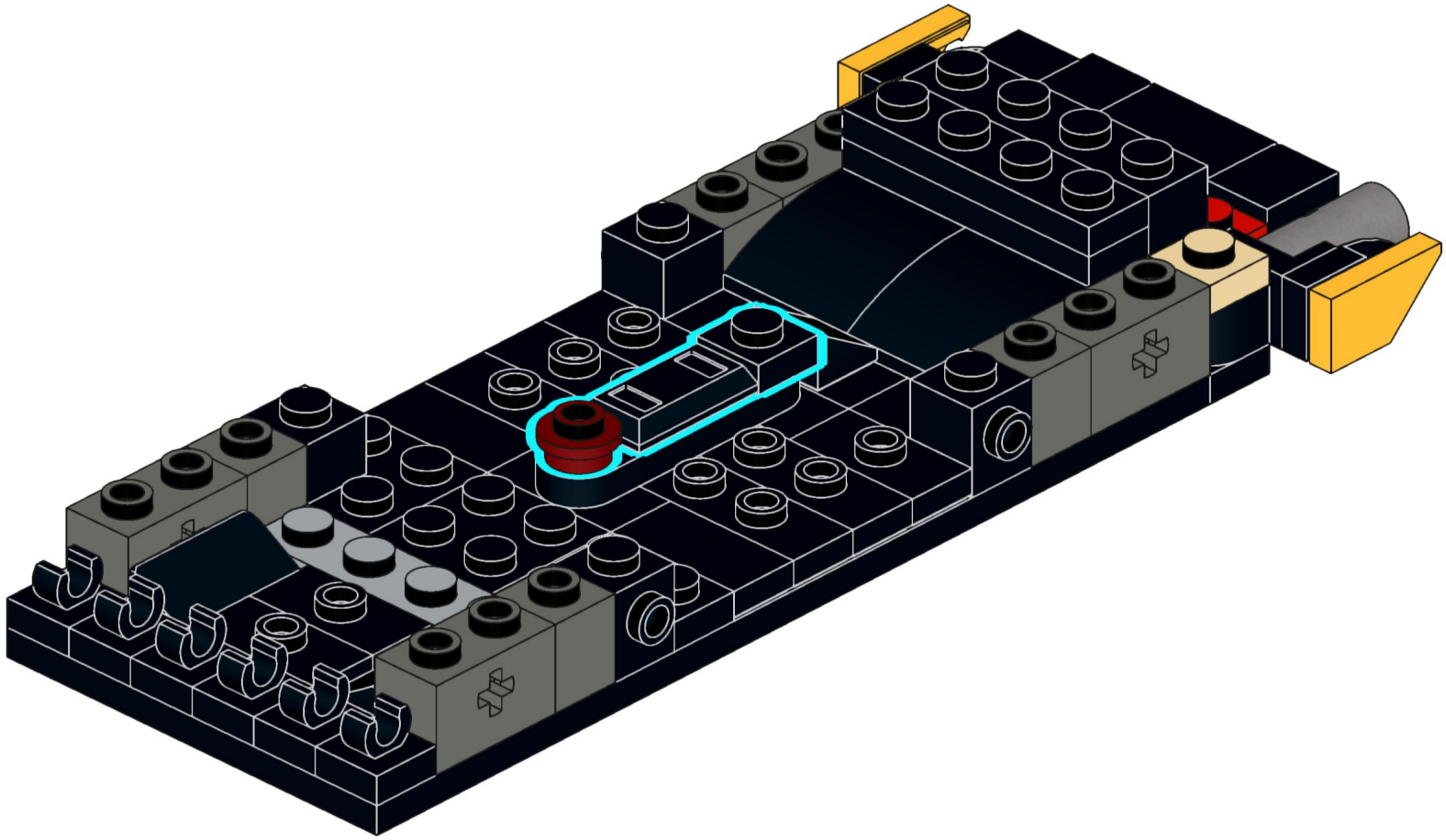

25

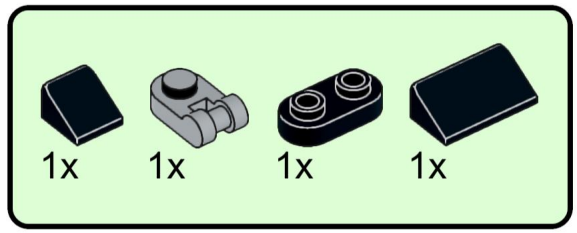

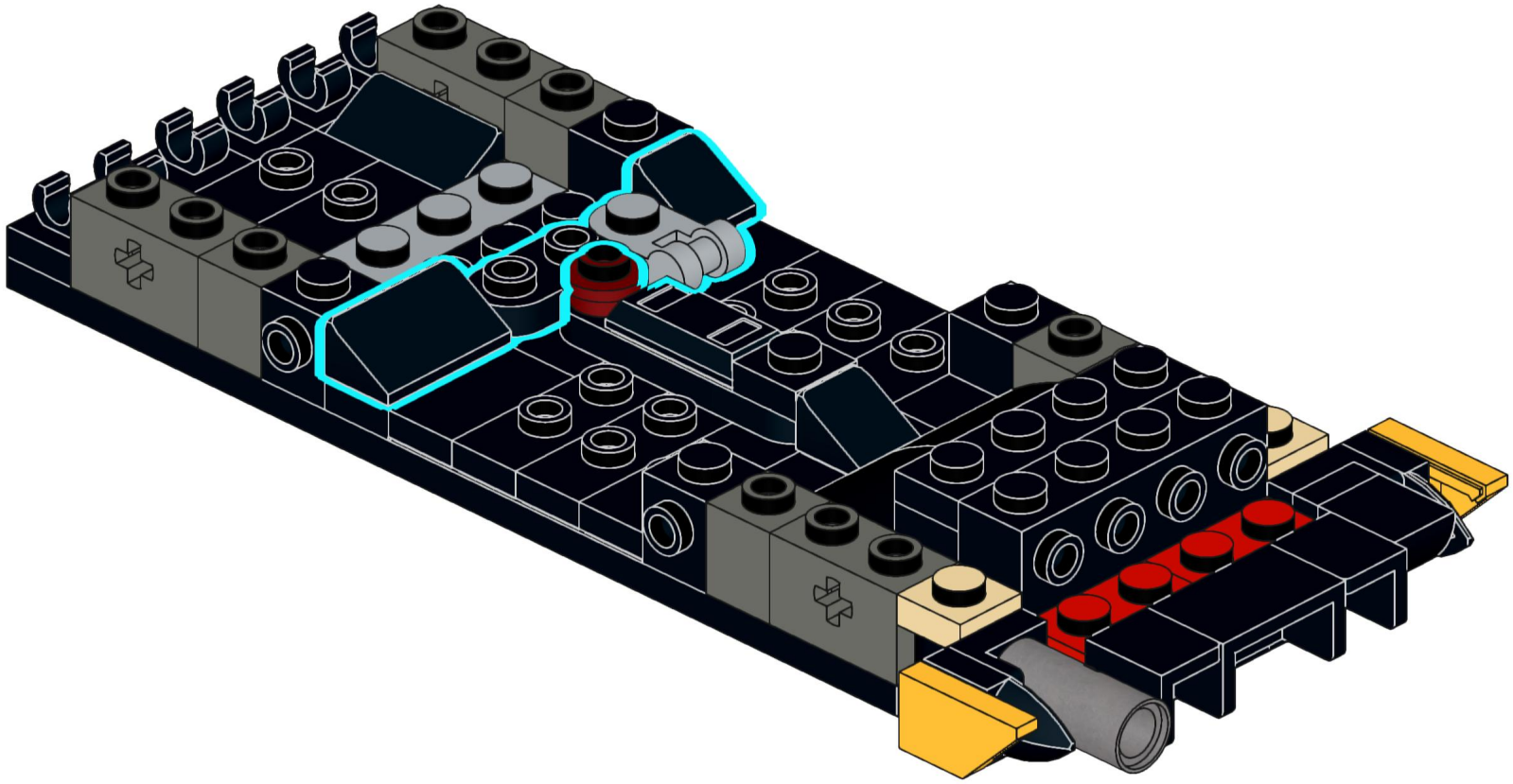

26

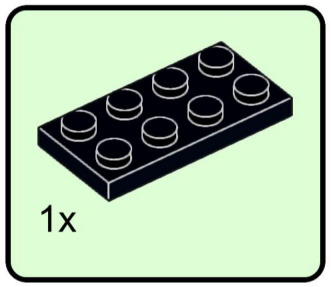

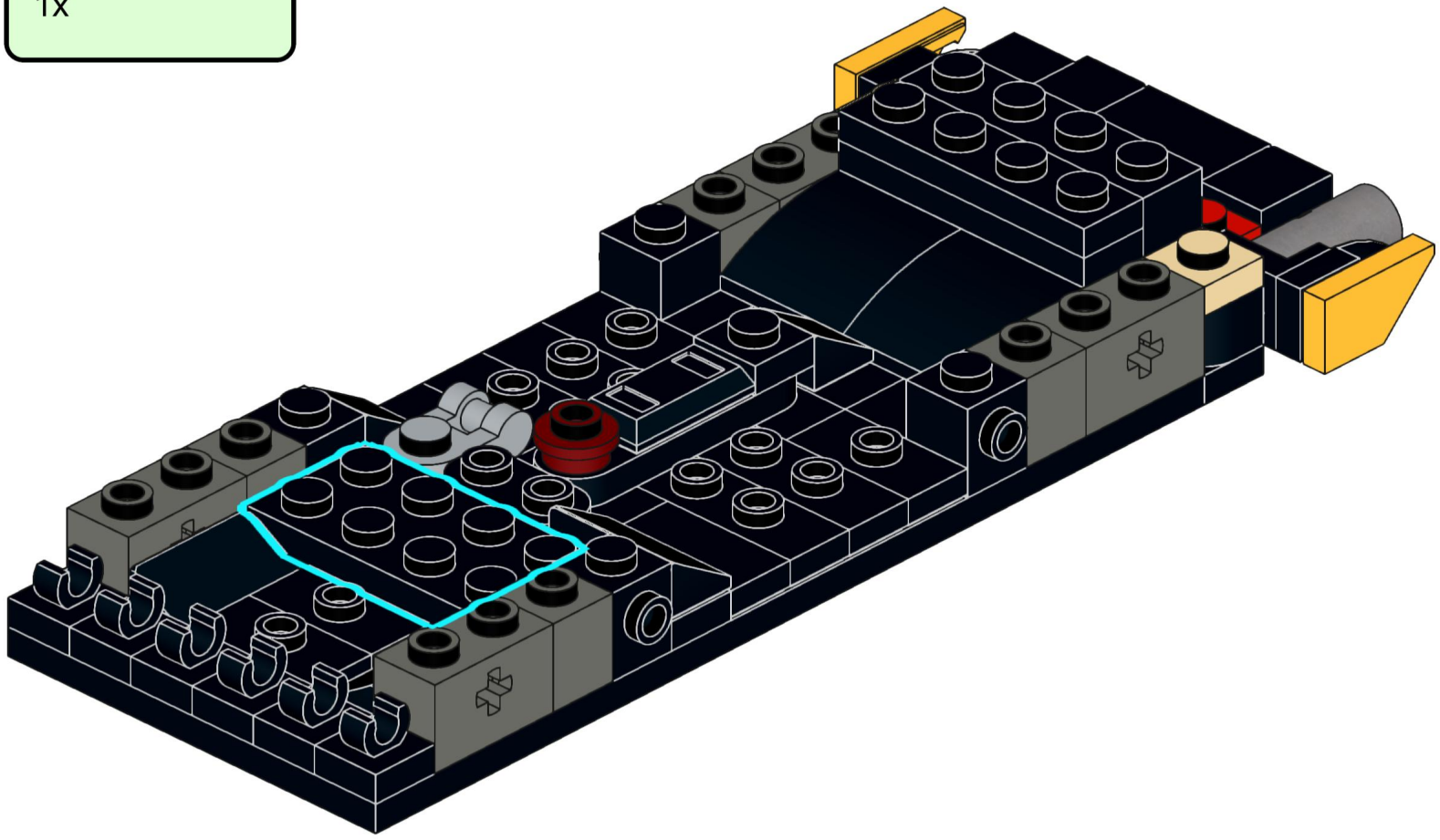

27

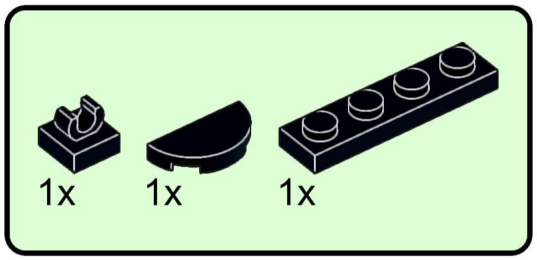

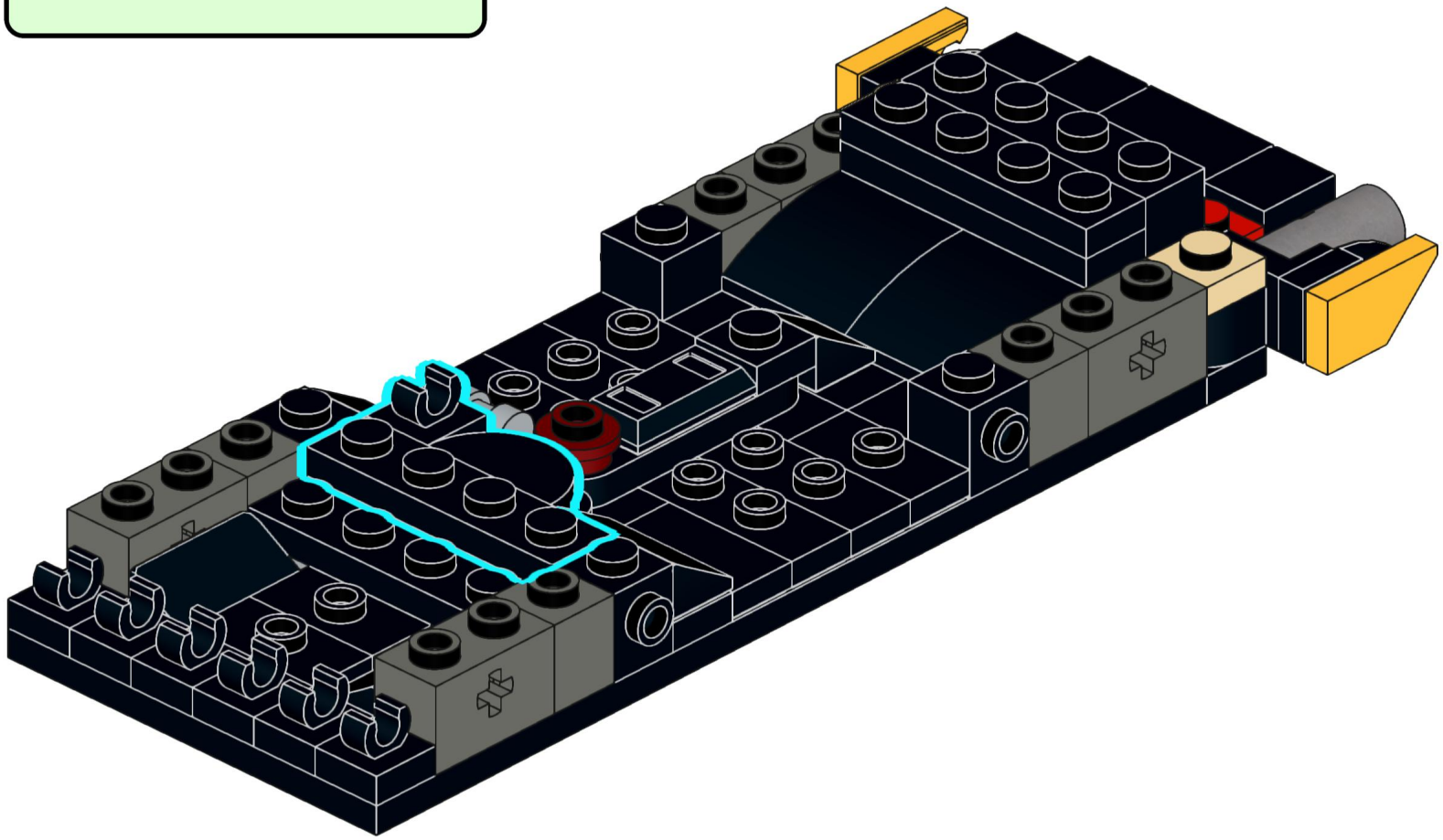

28

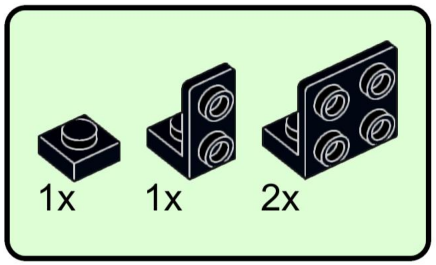

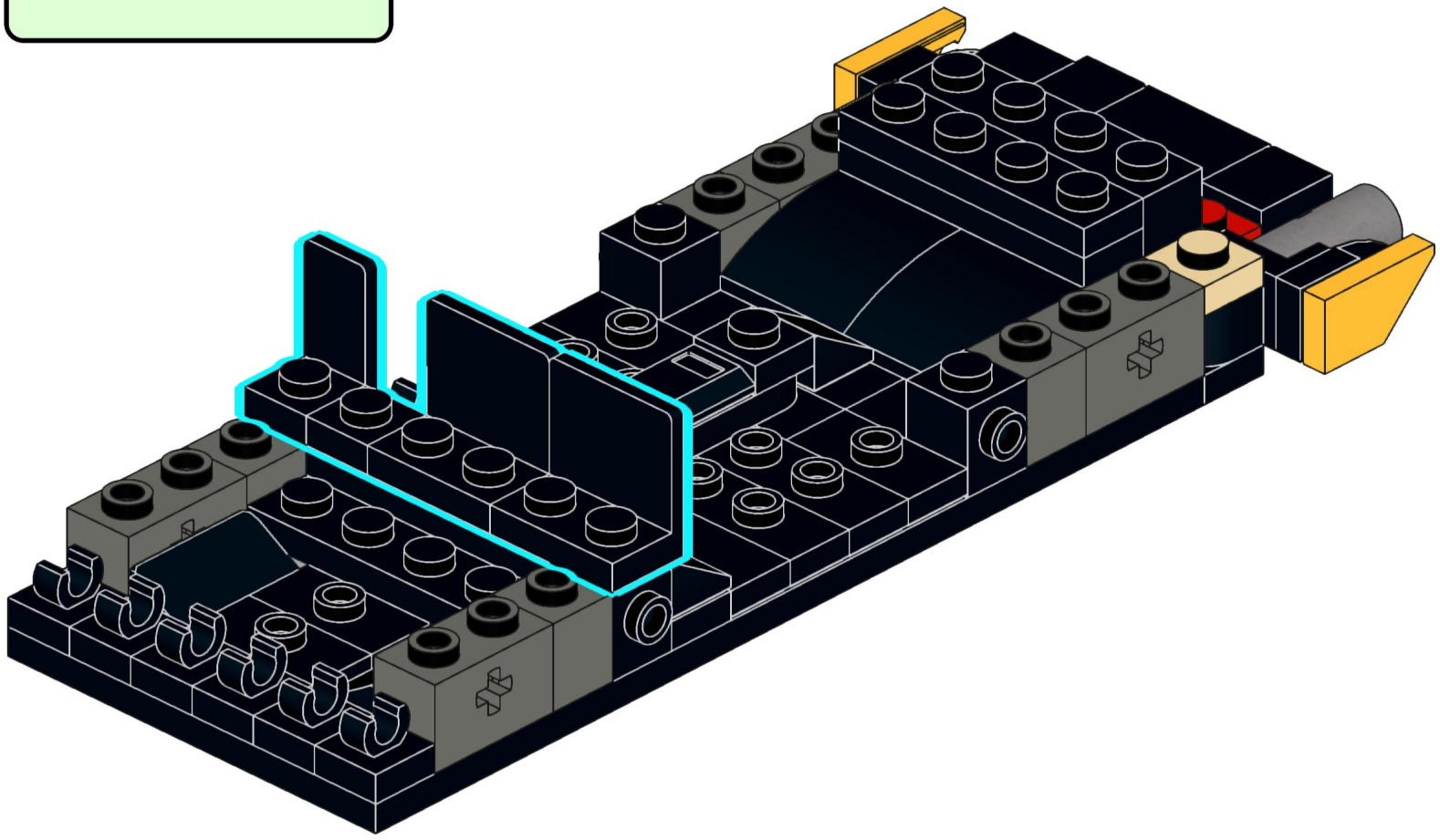

29

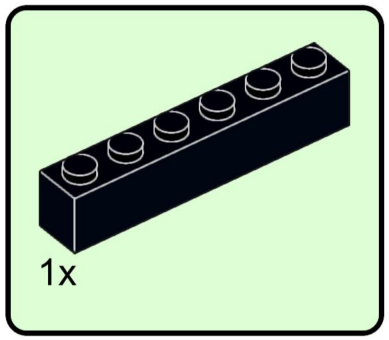

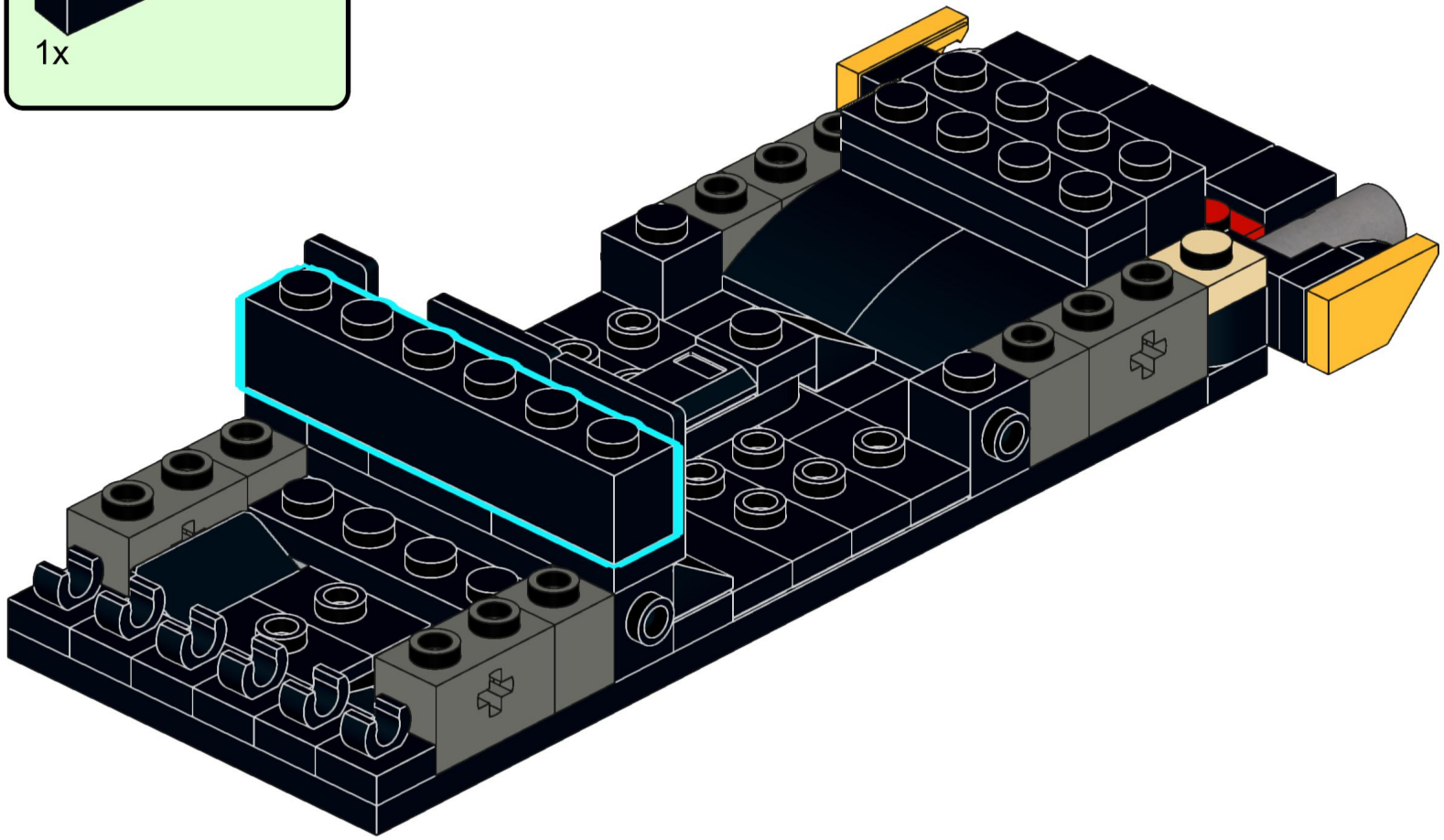

30

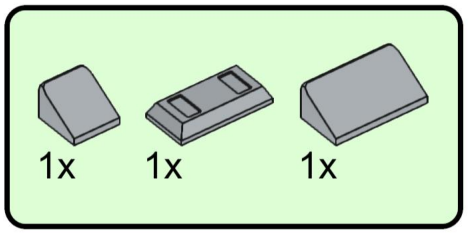

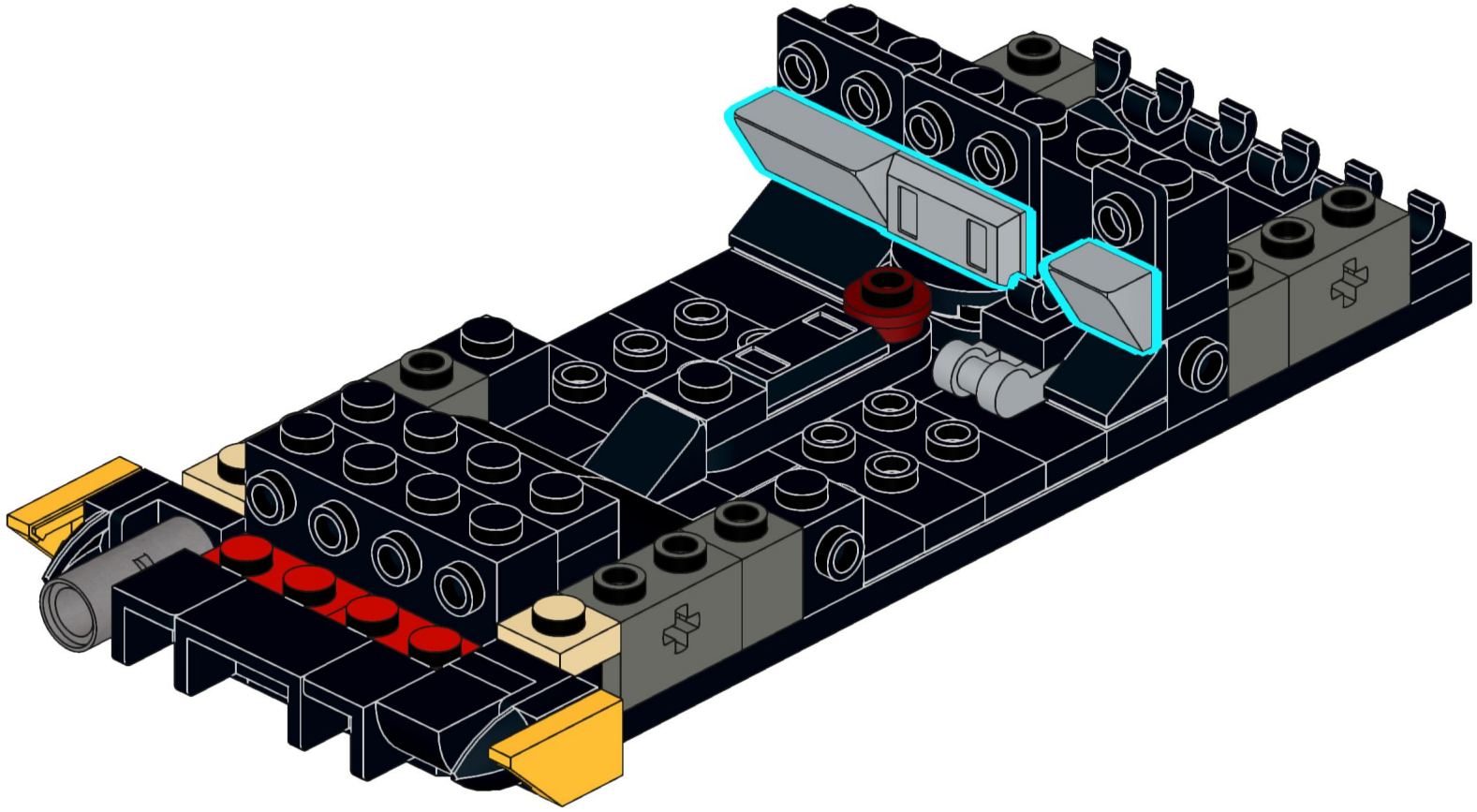

31

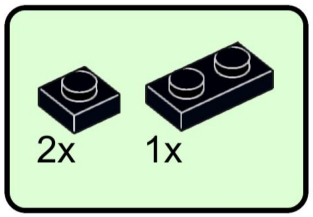

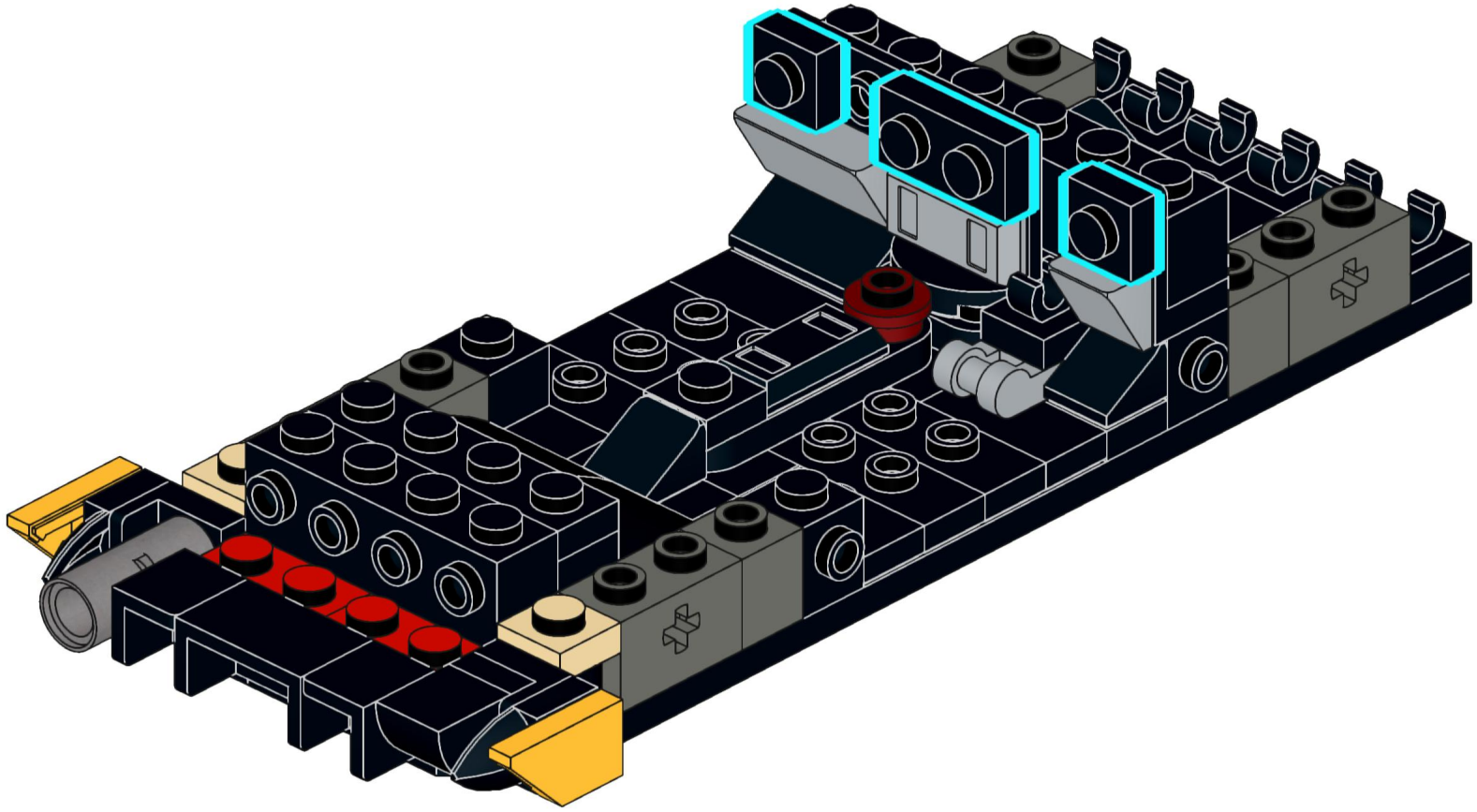

32

4x

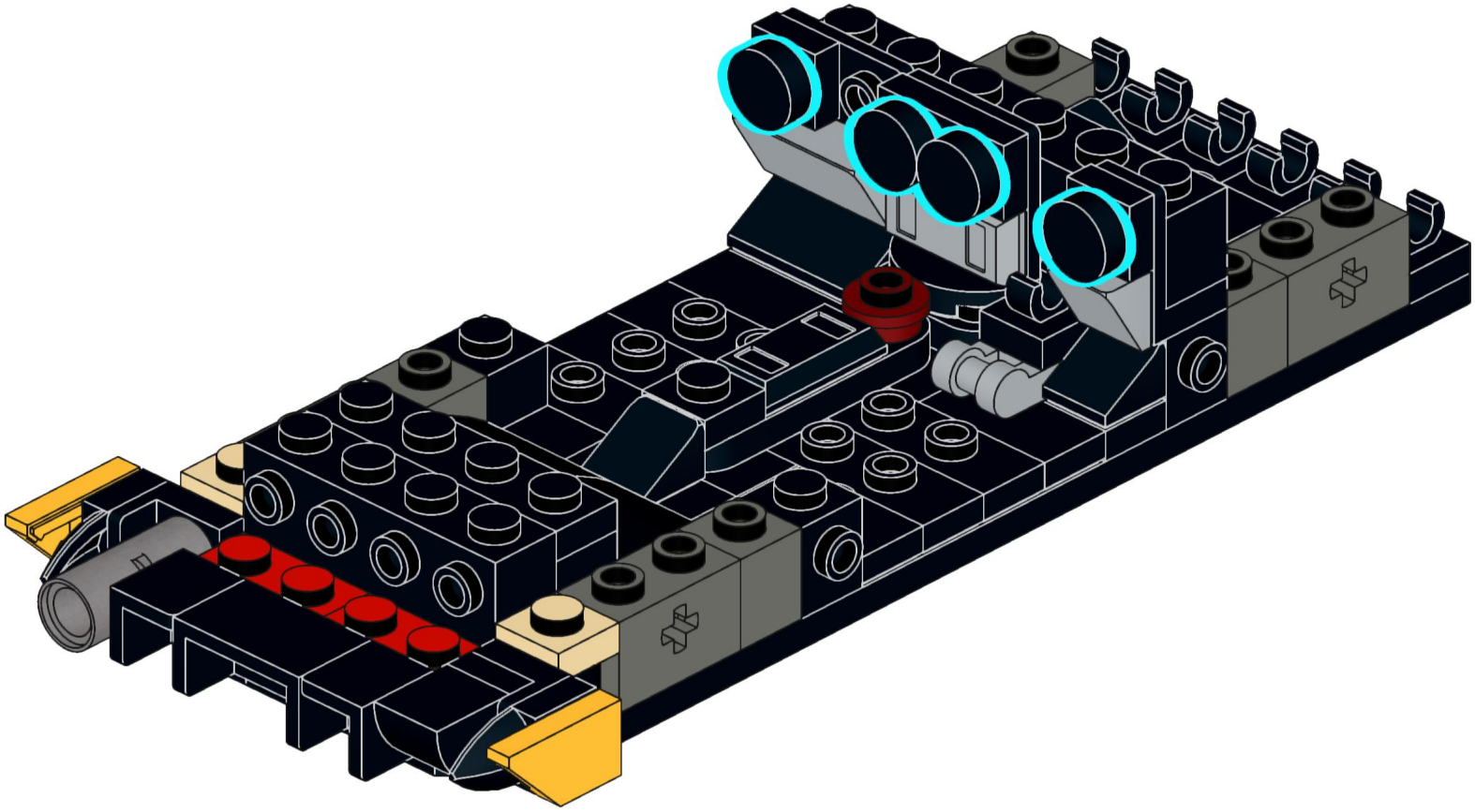

33

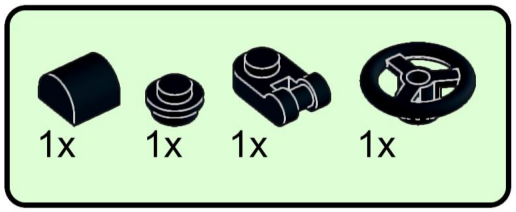

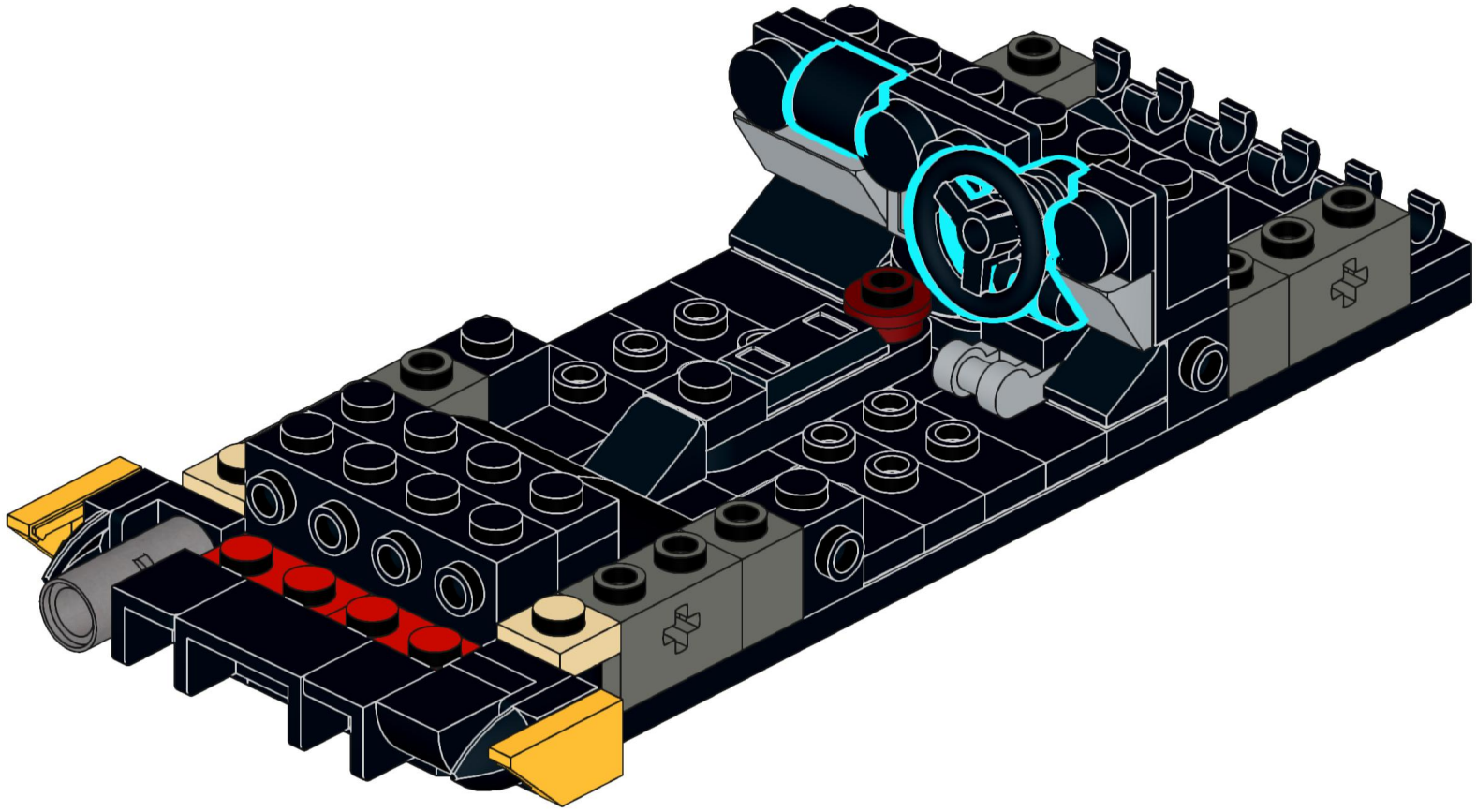

34

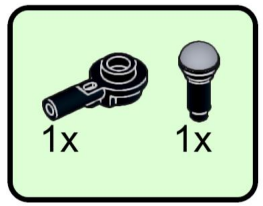

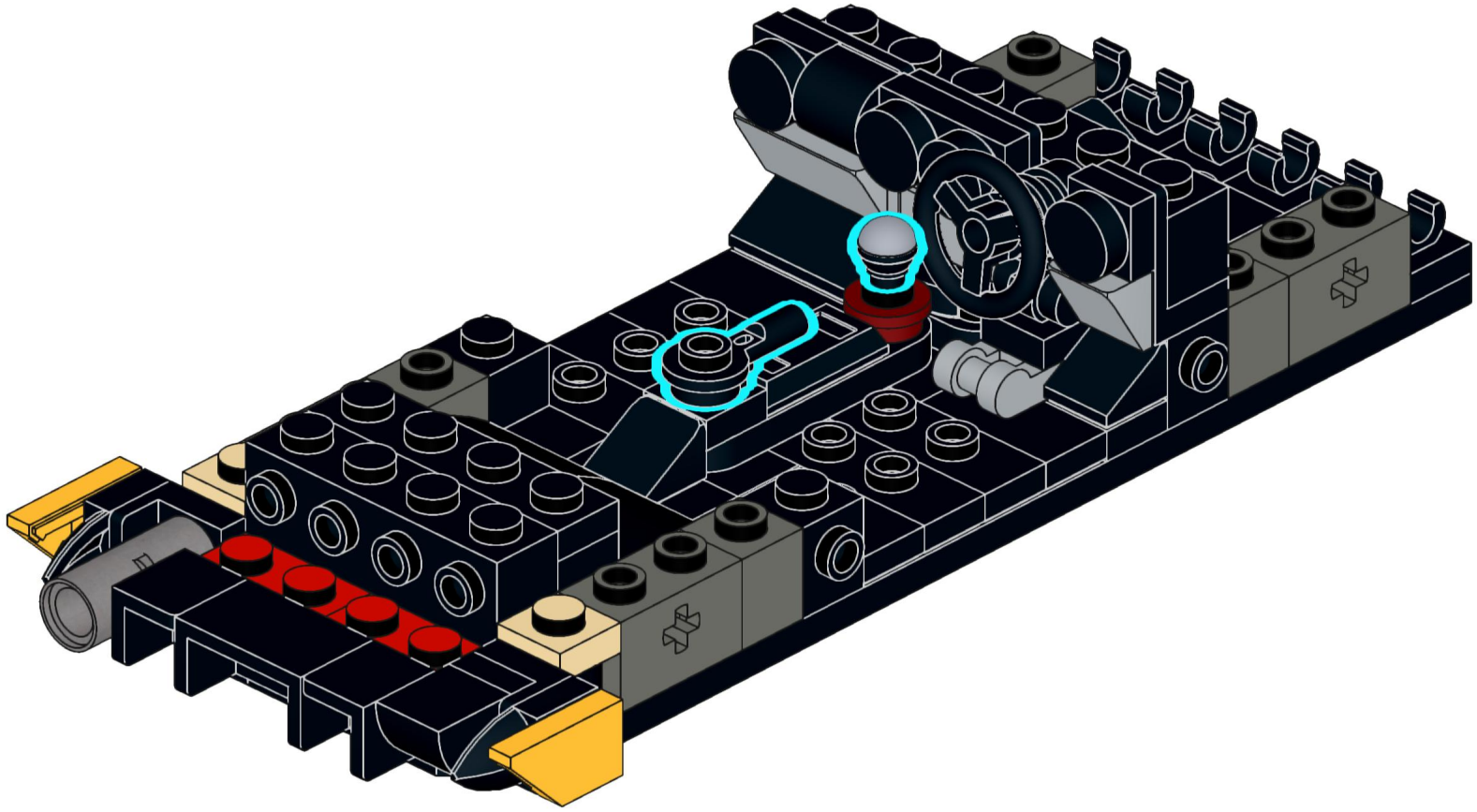

35

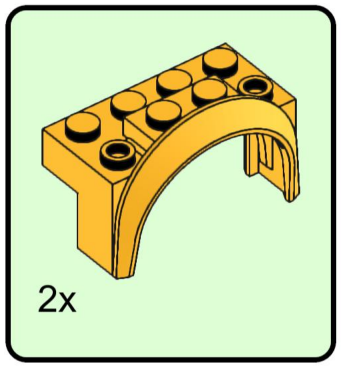

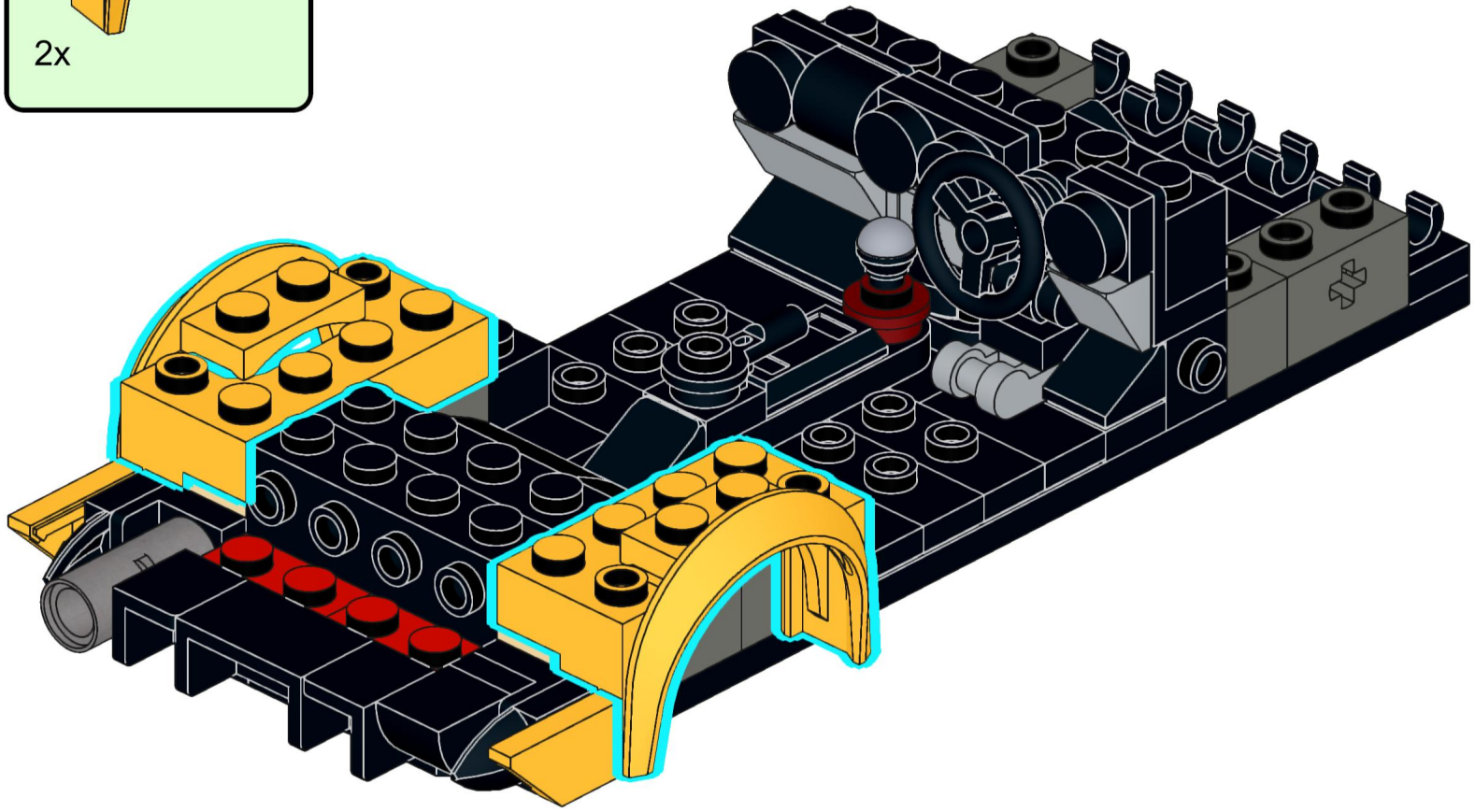

36

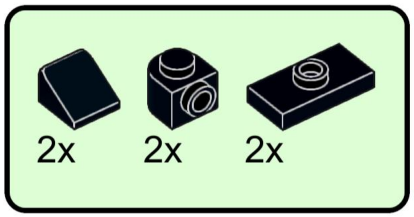

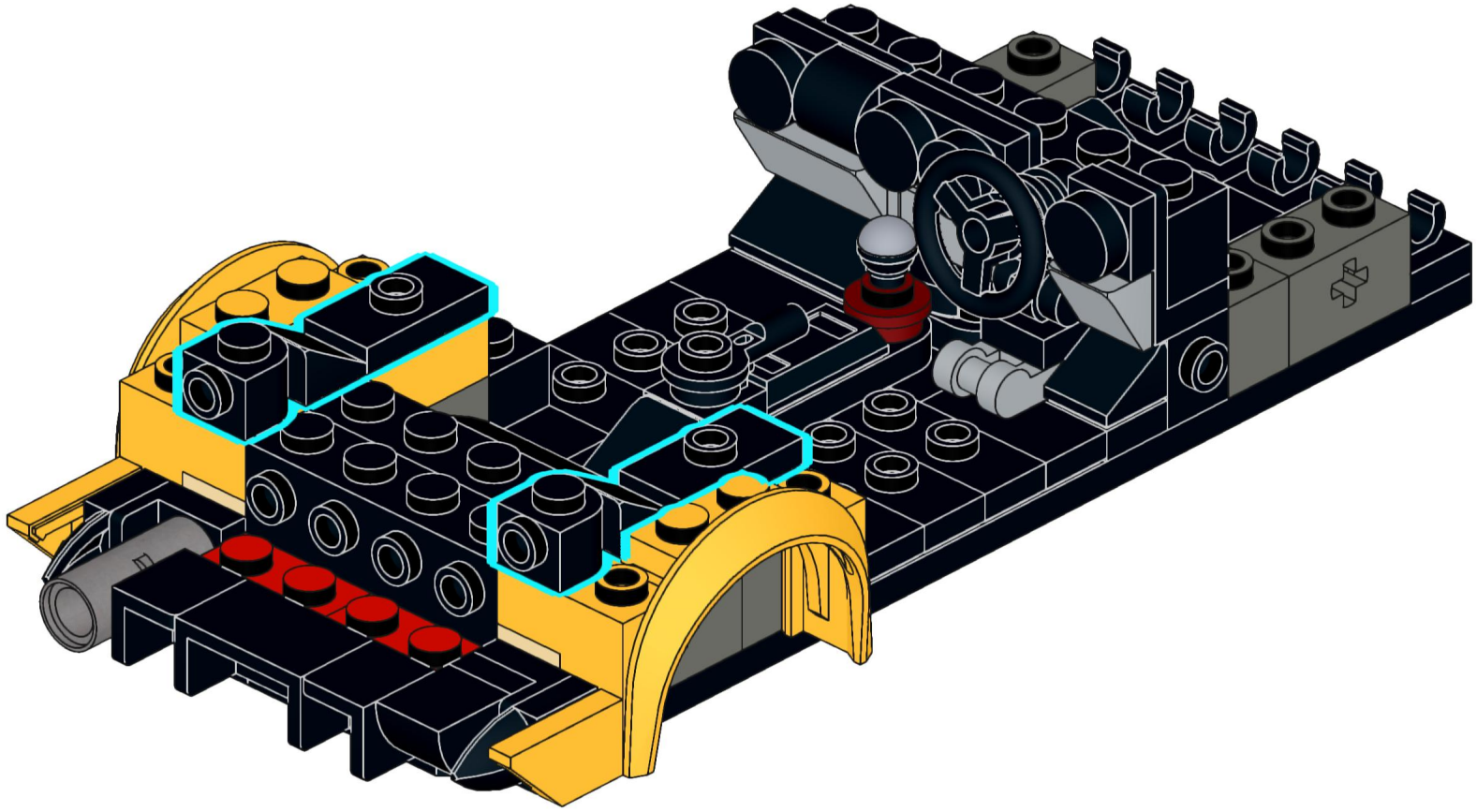

37

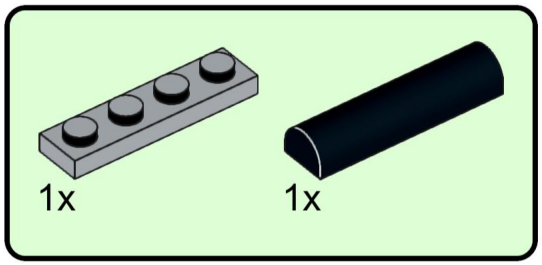

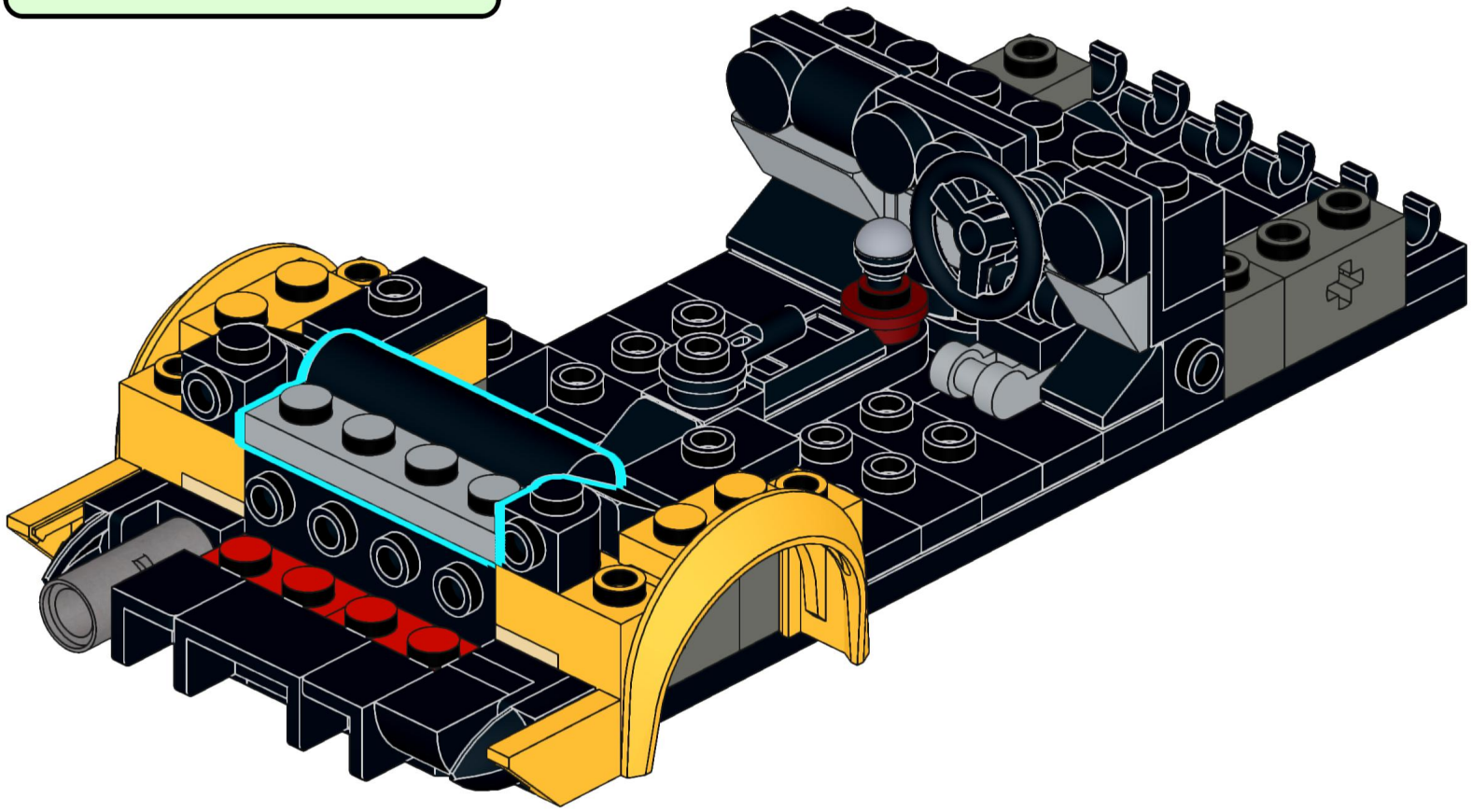

38

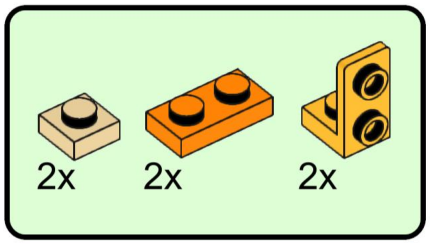

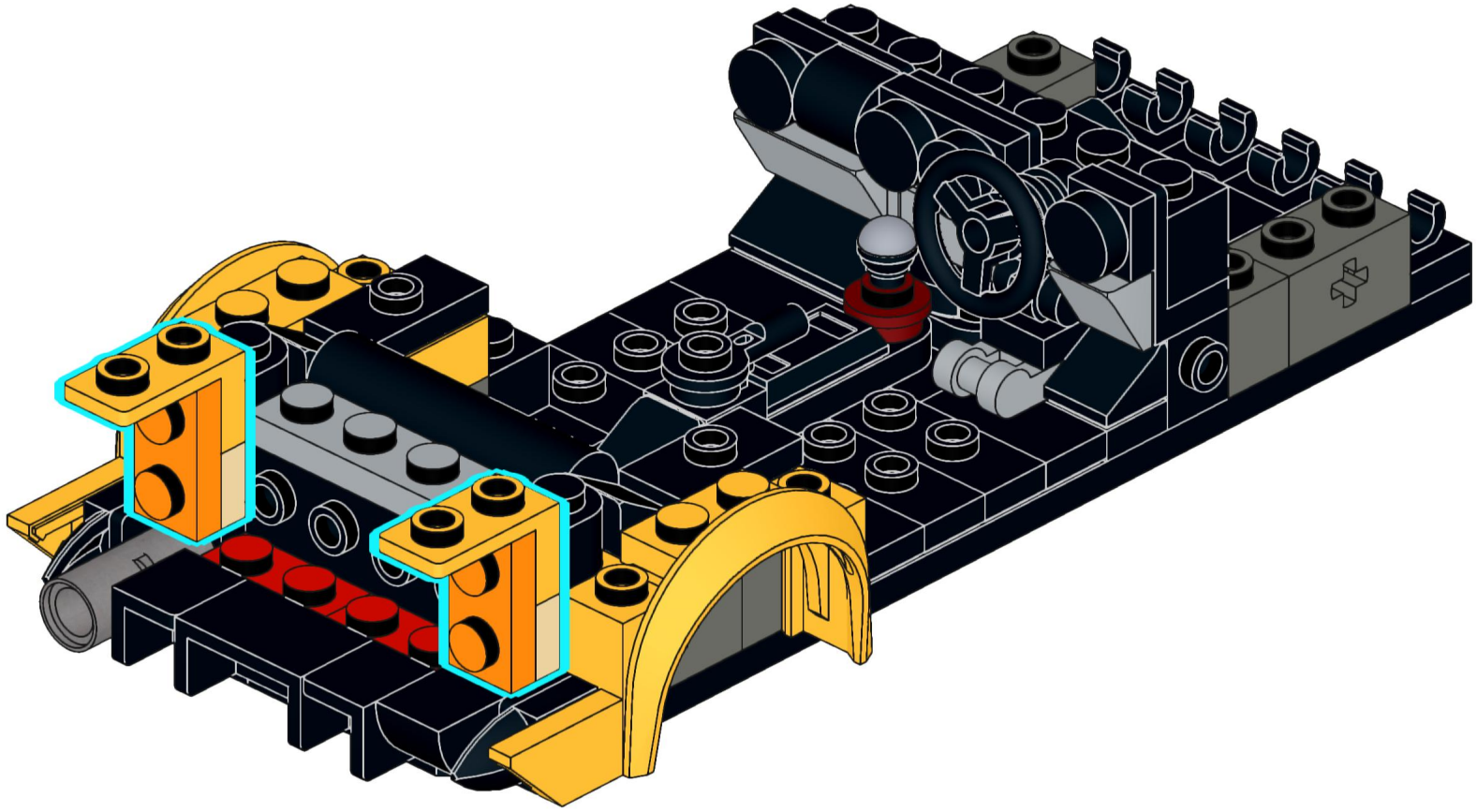

39

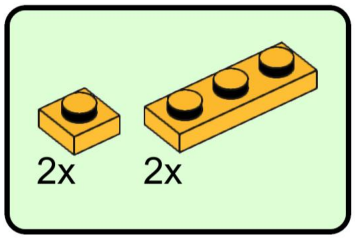

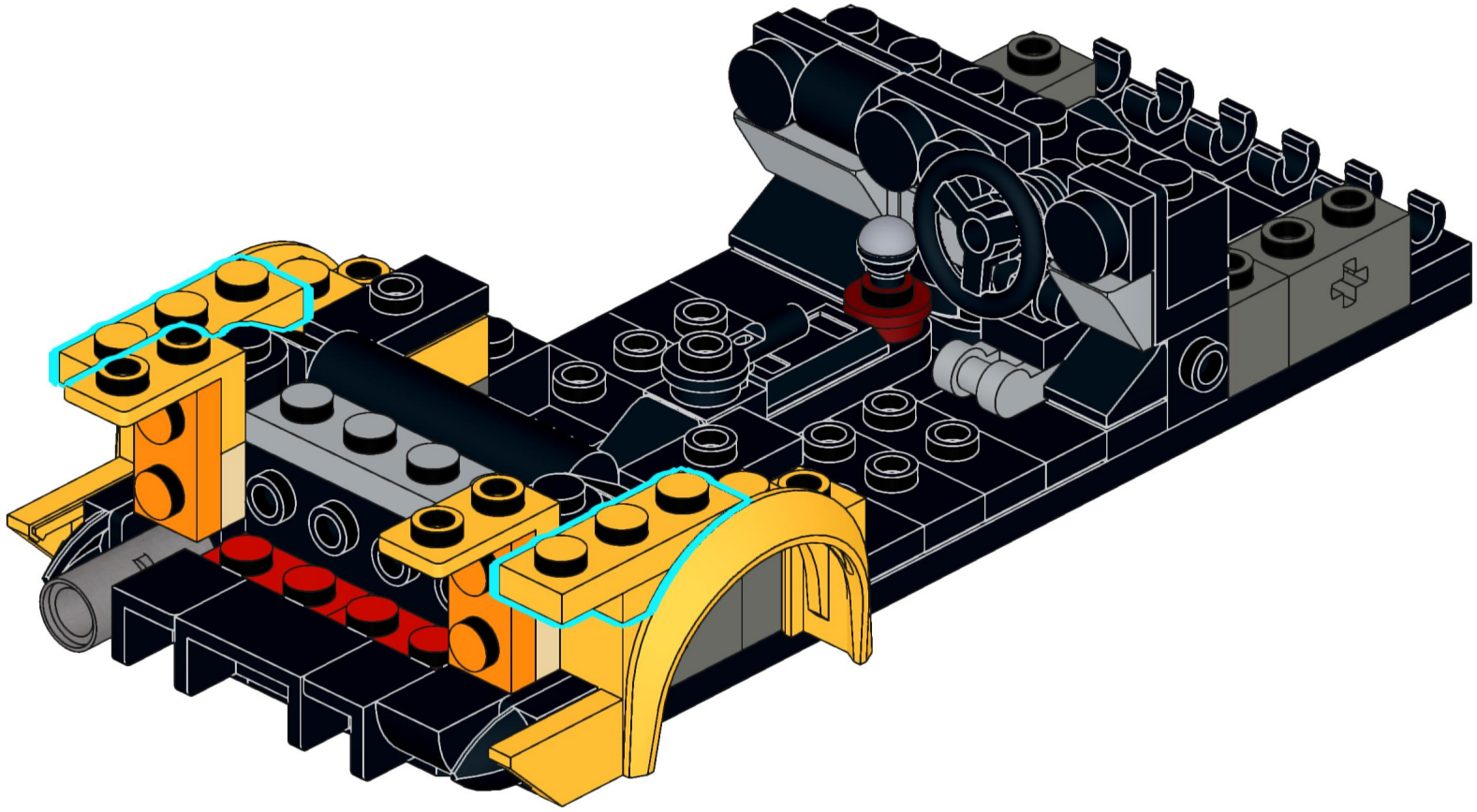

40

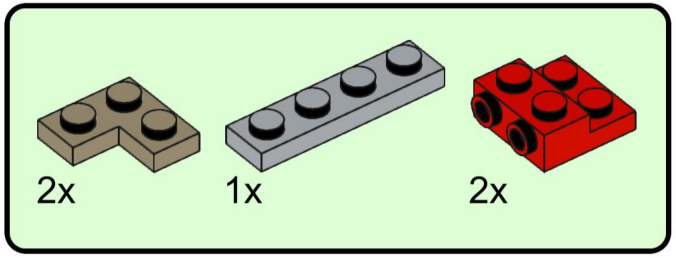

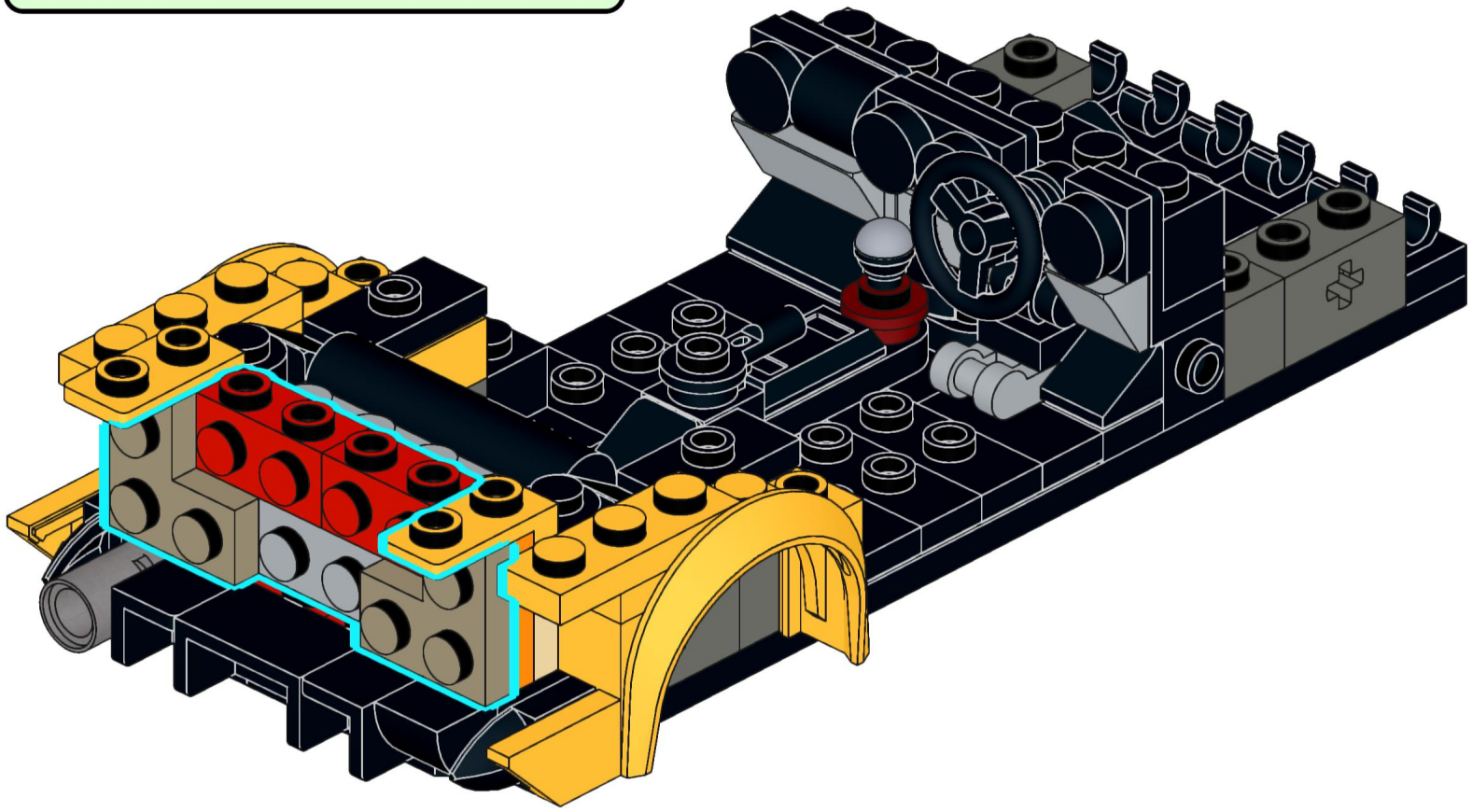

41

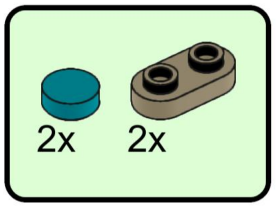

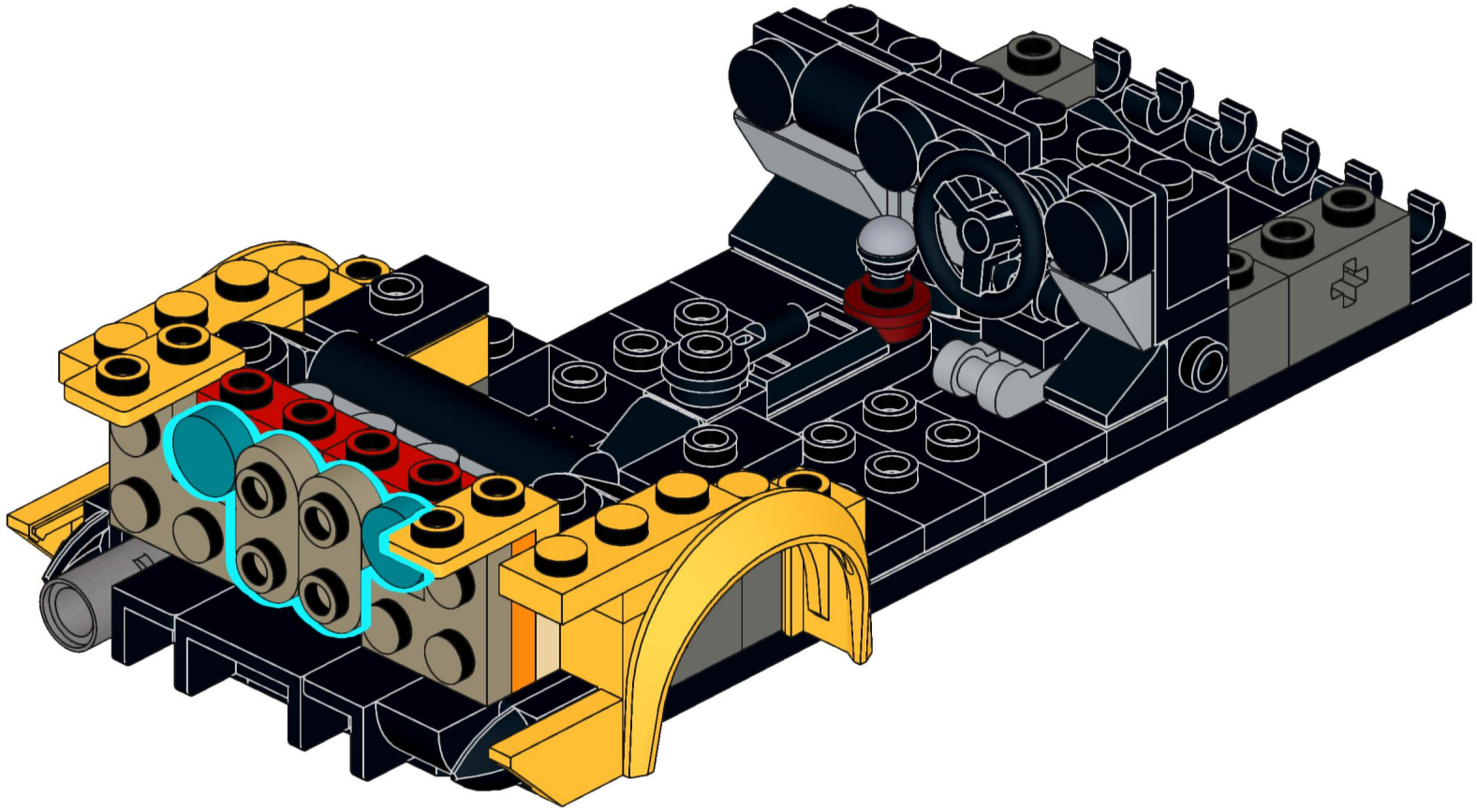

42

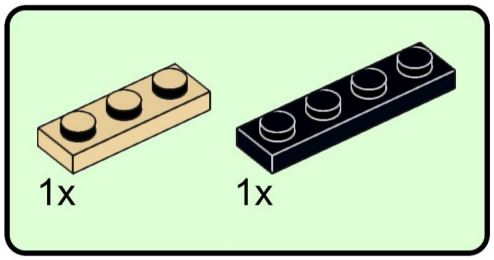

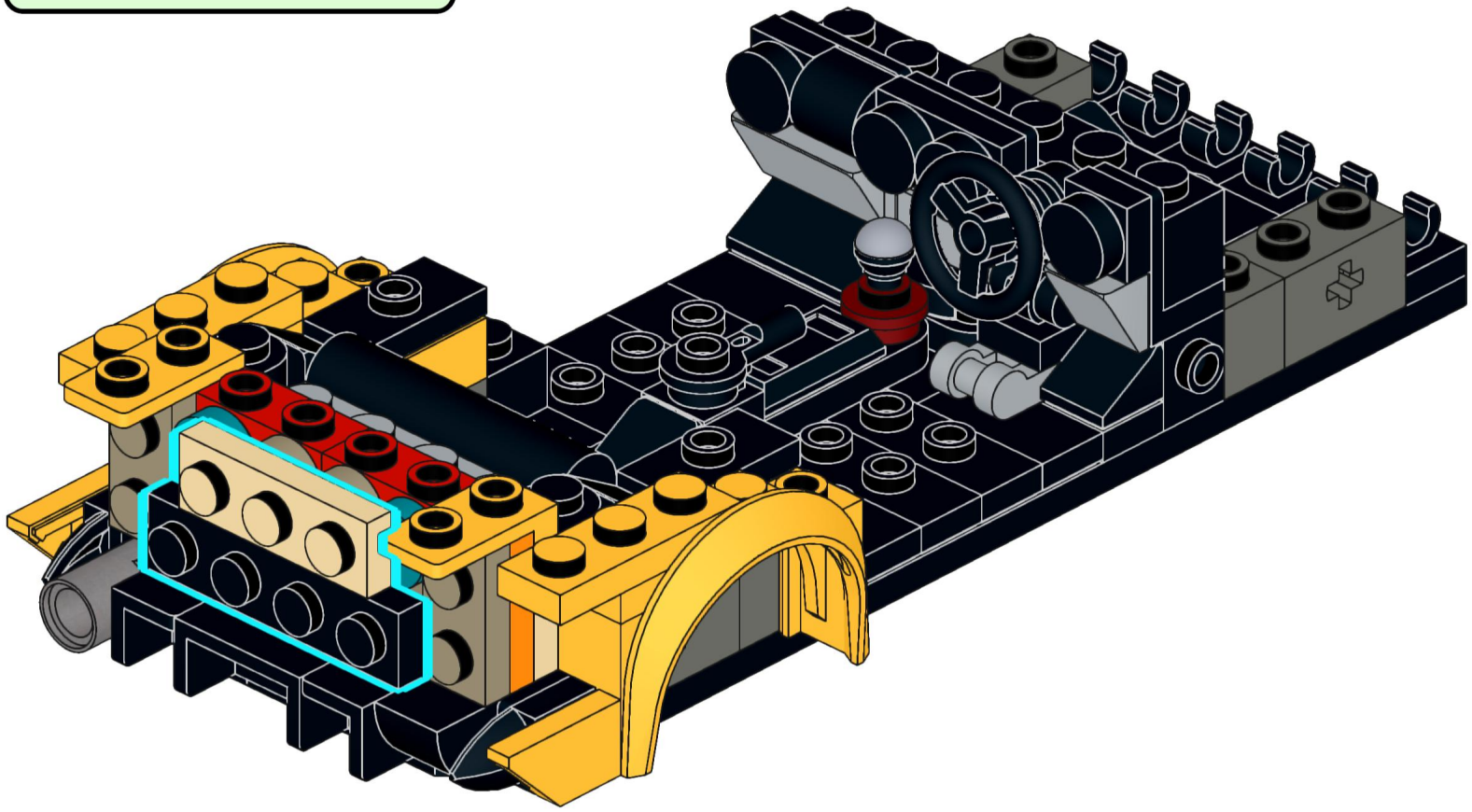

43

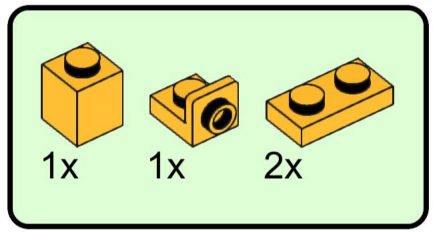

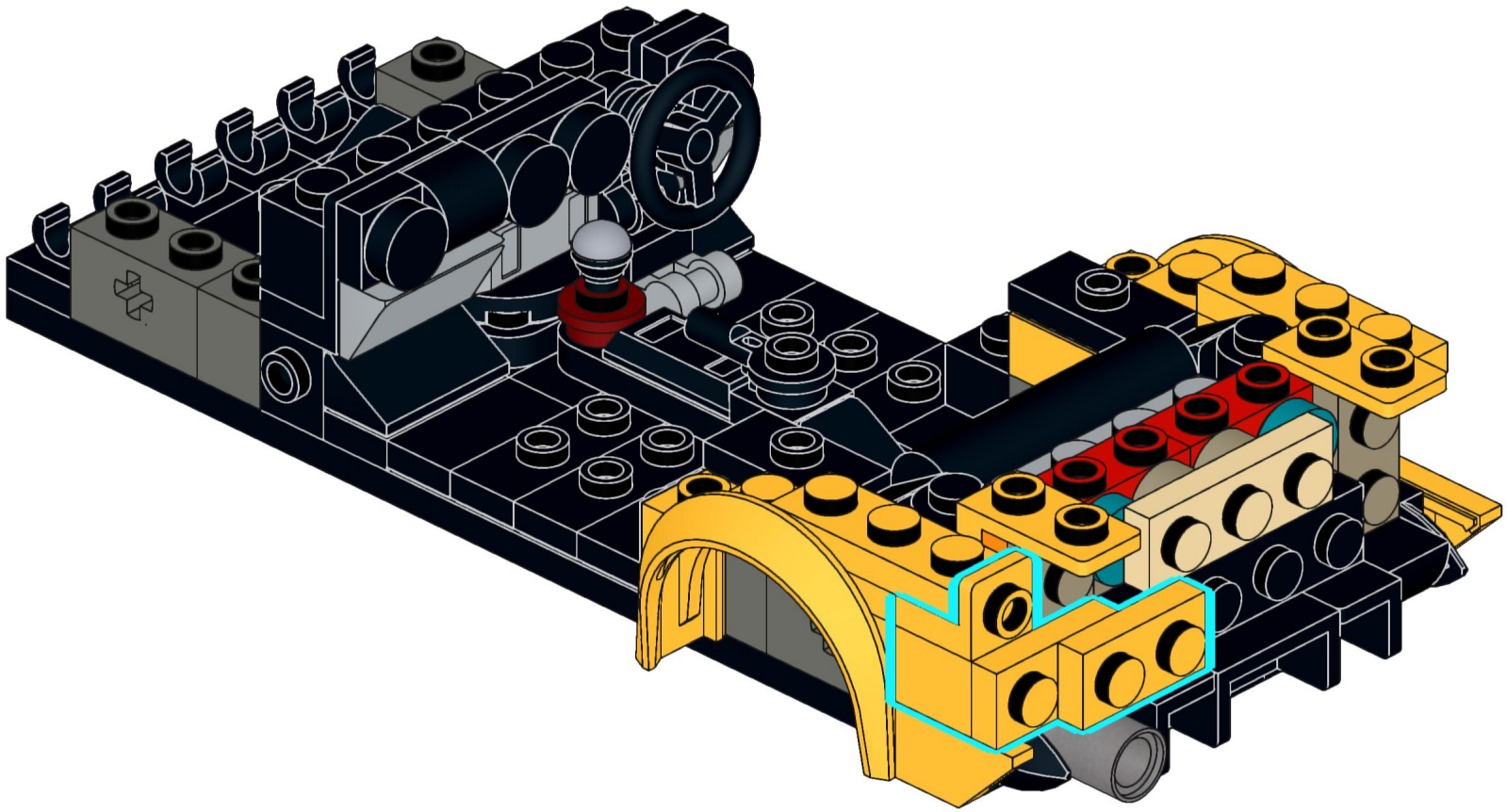

44

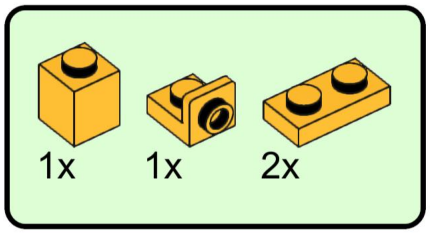

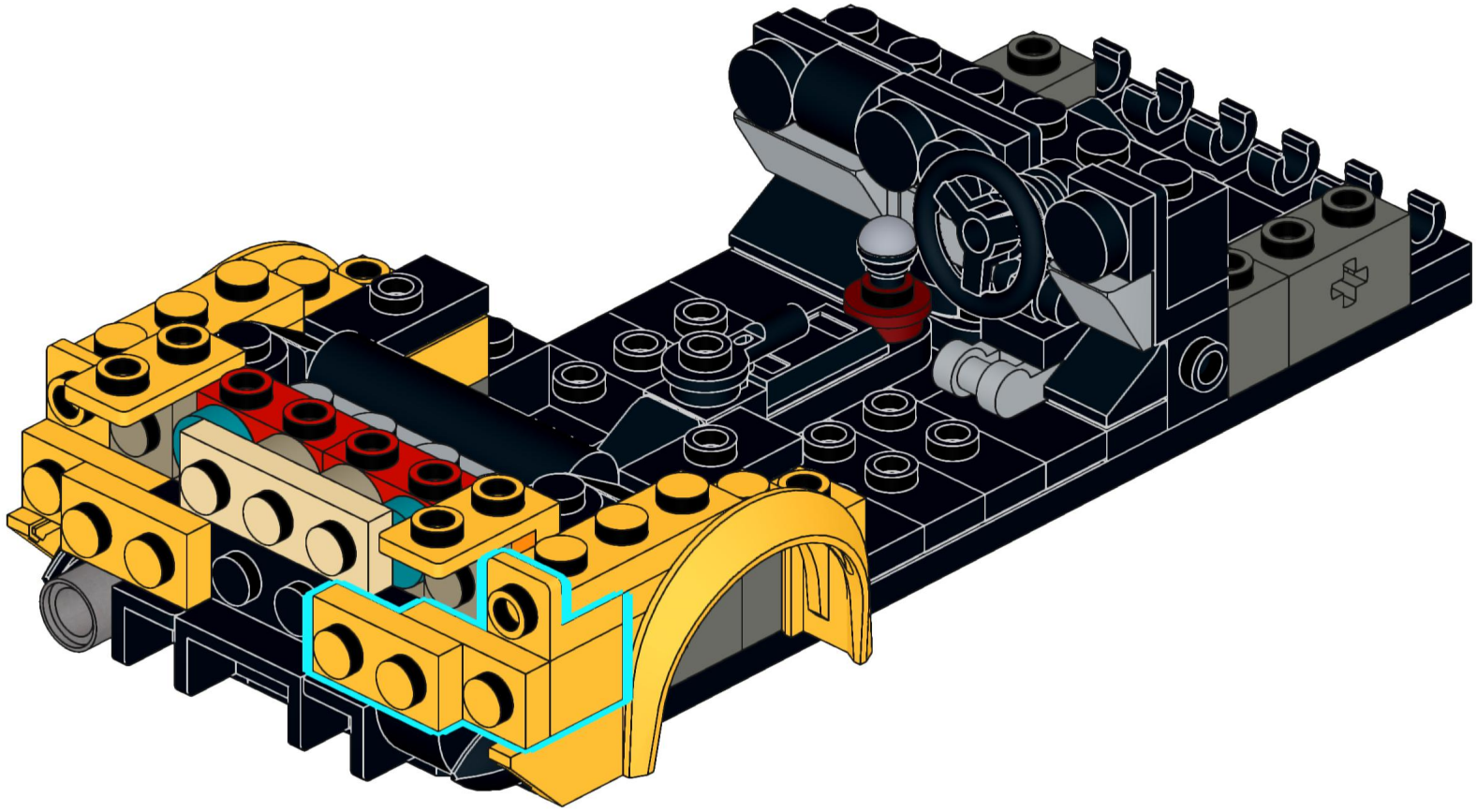

45

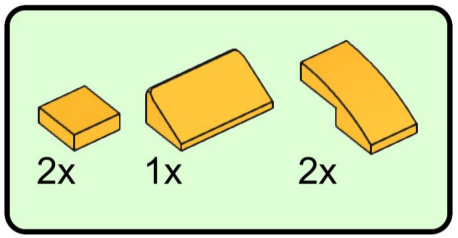

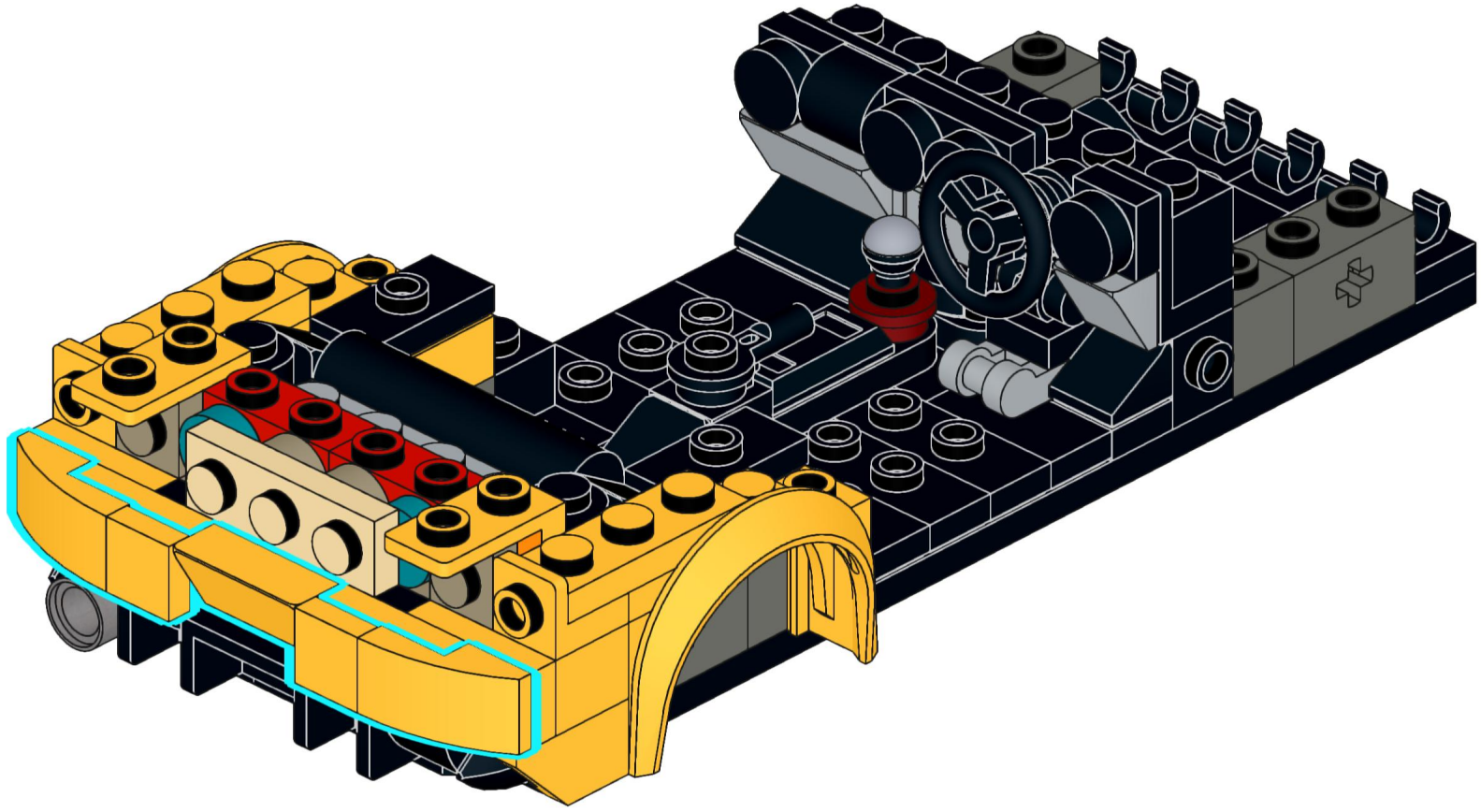

46

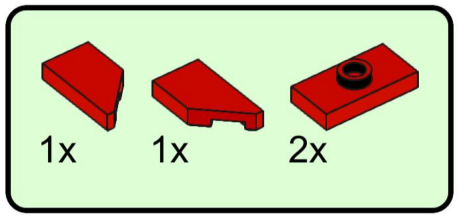

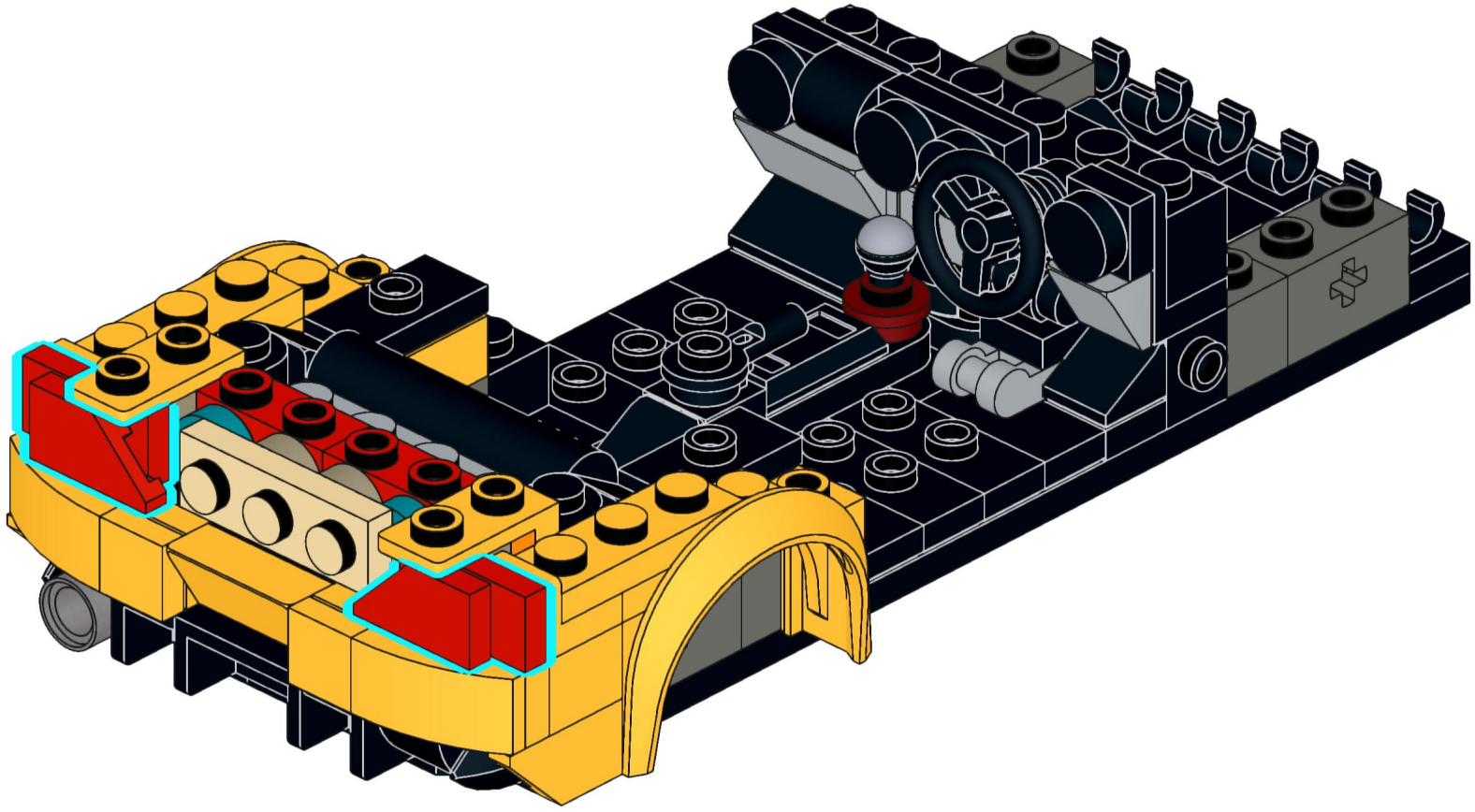

47

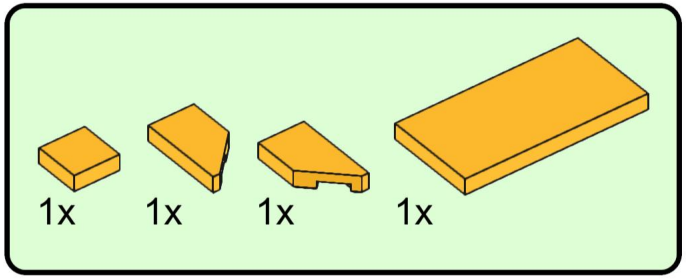

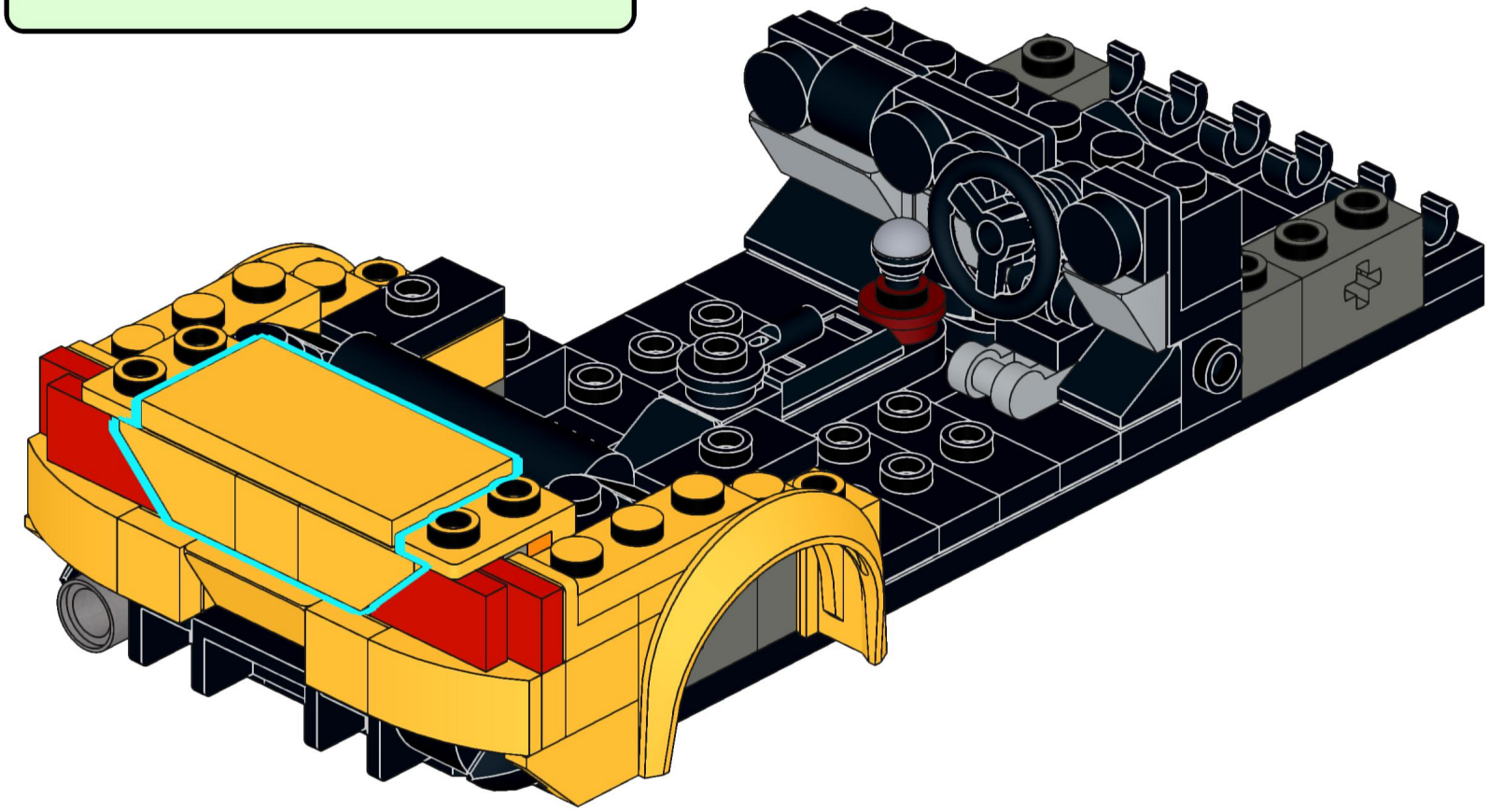

48

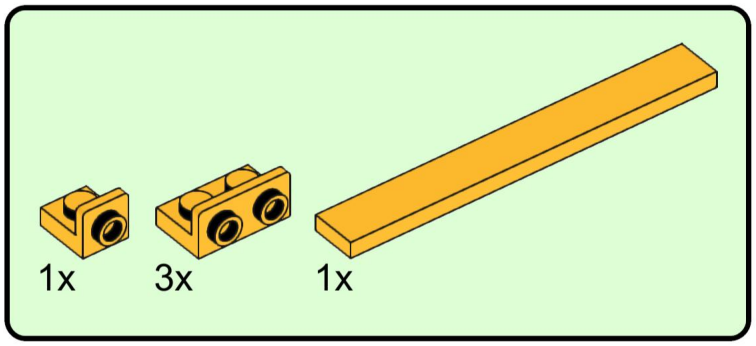

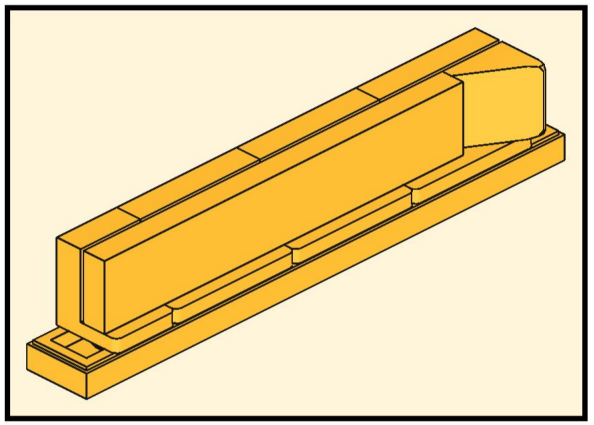

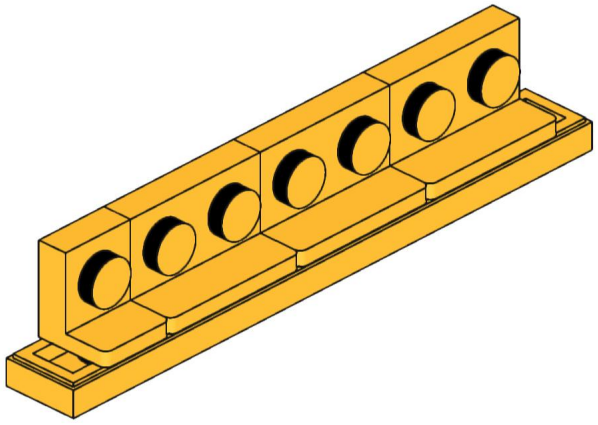

49

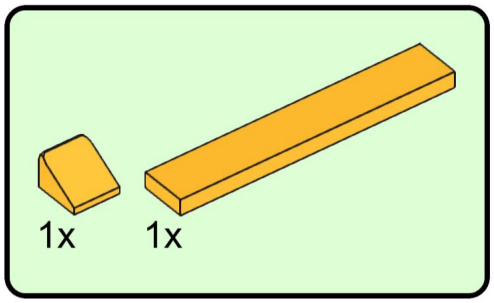

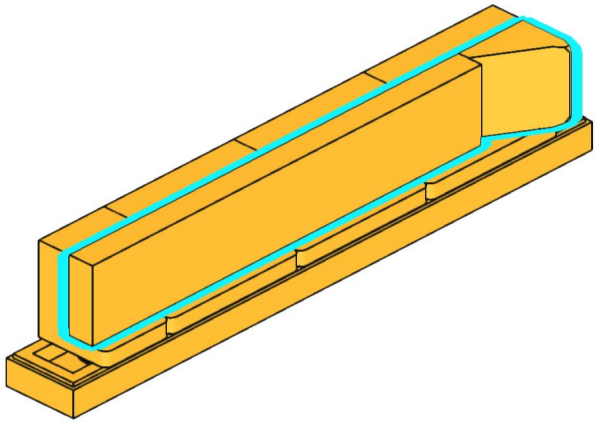

50

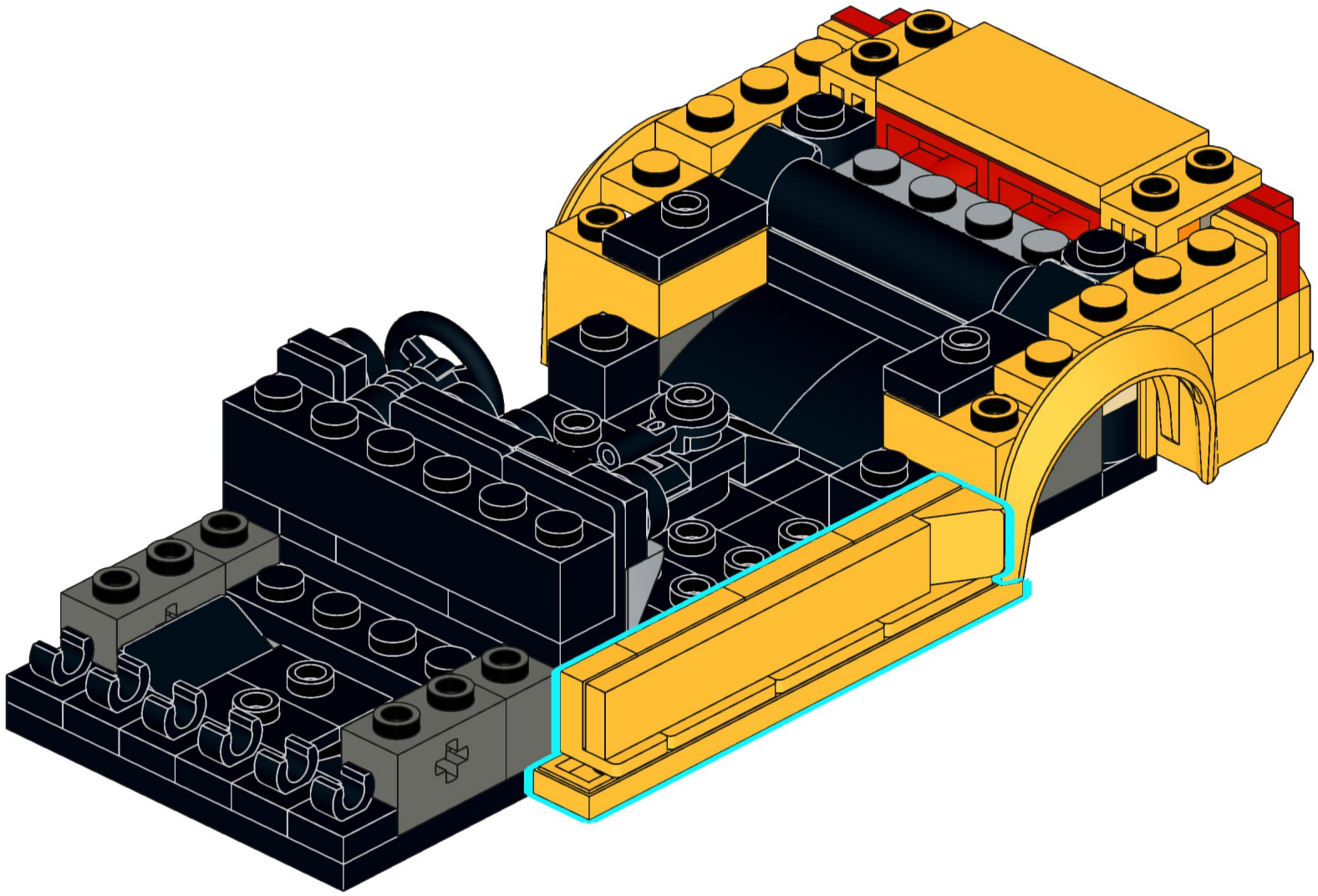

51

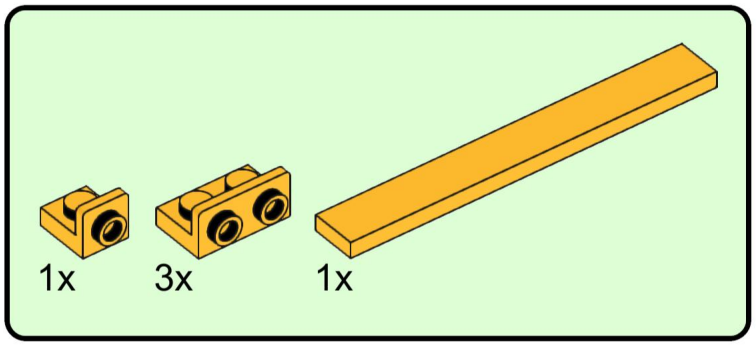

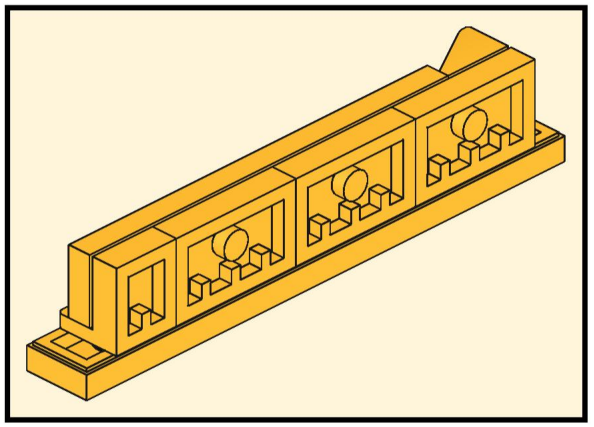

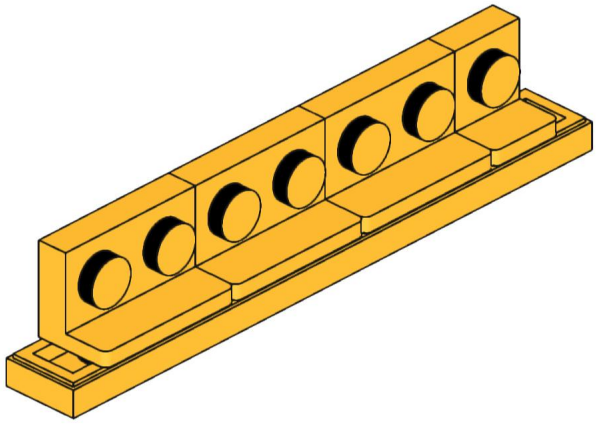

52

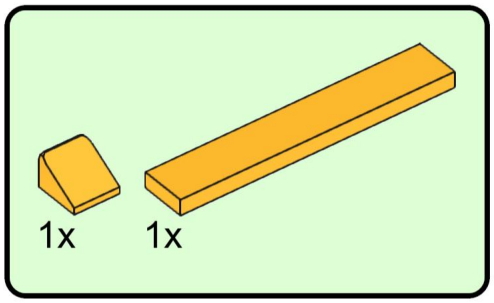

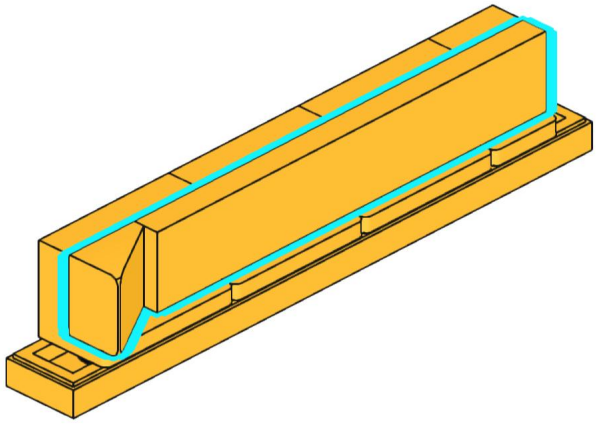

53

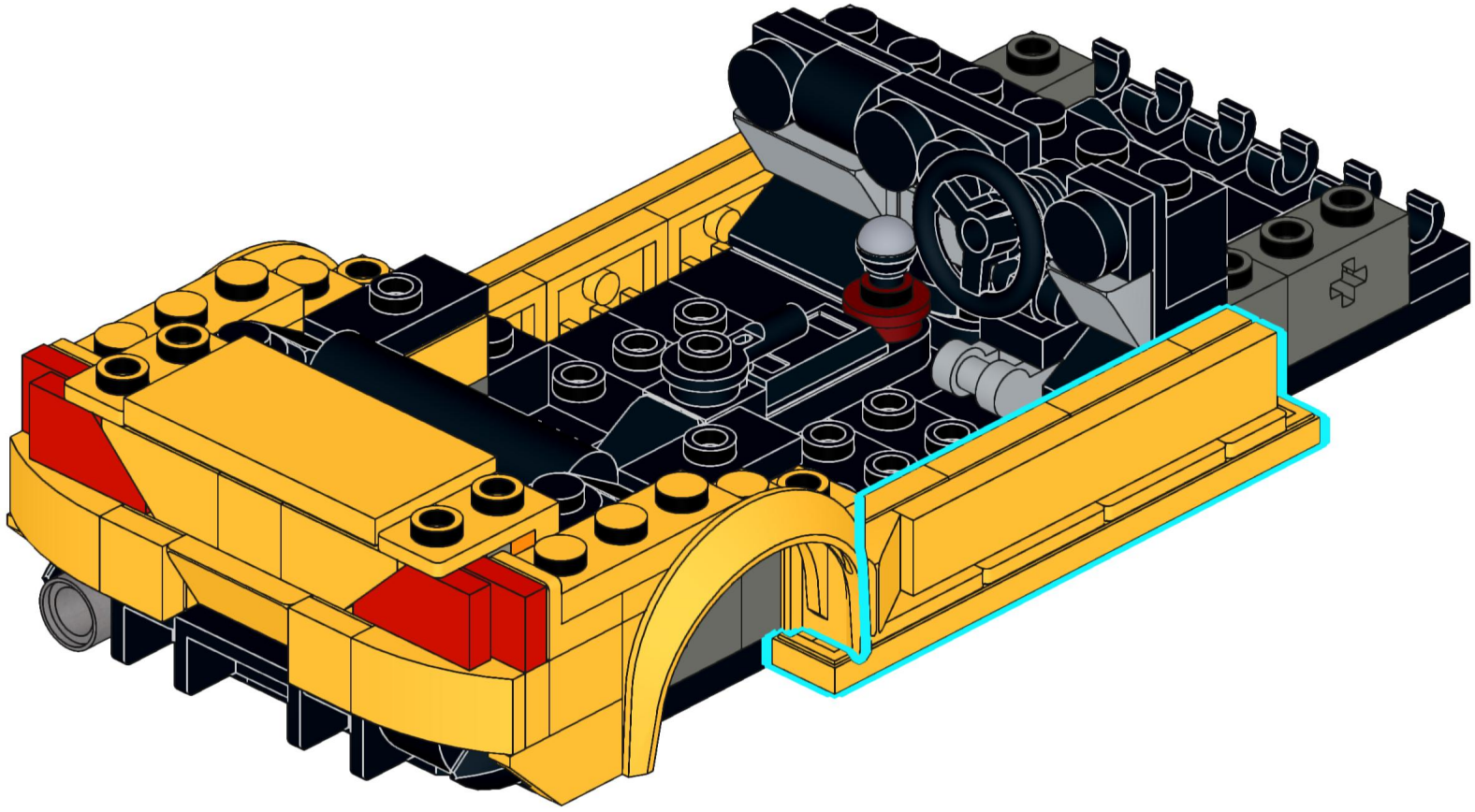

54

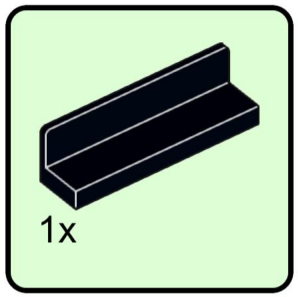

55

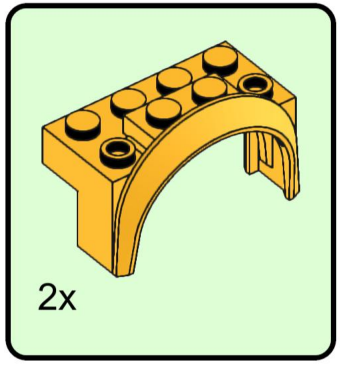

56

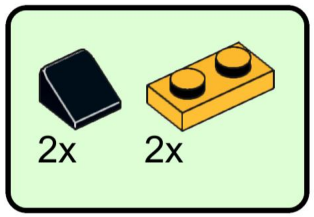

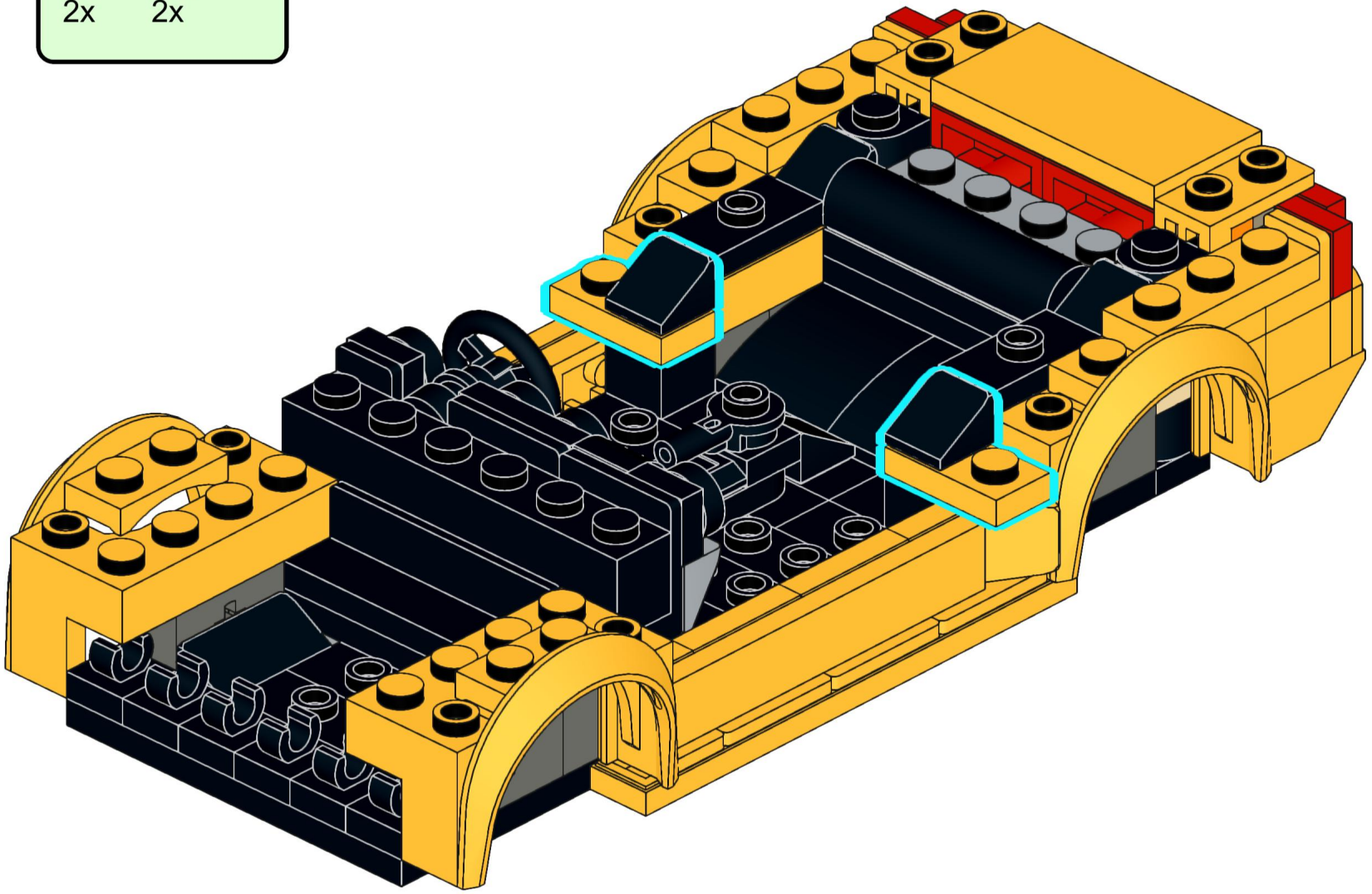

57

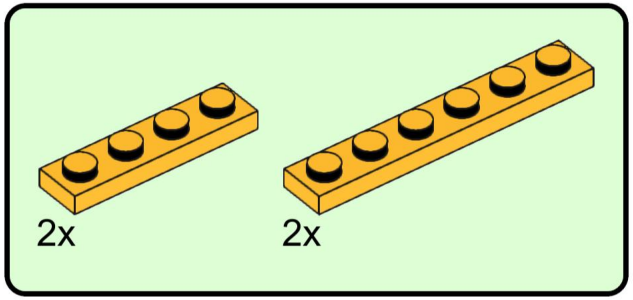

58

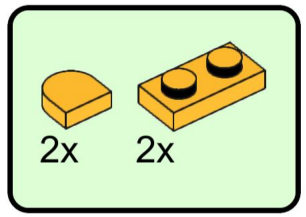

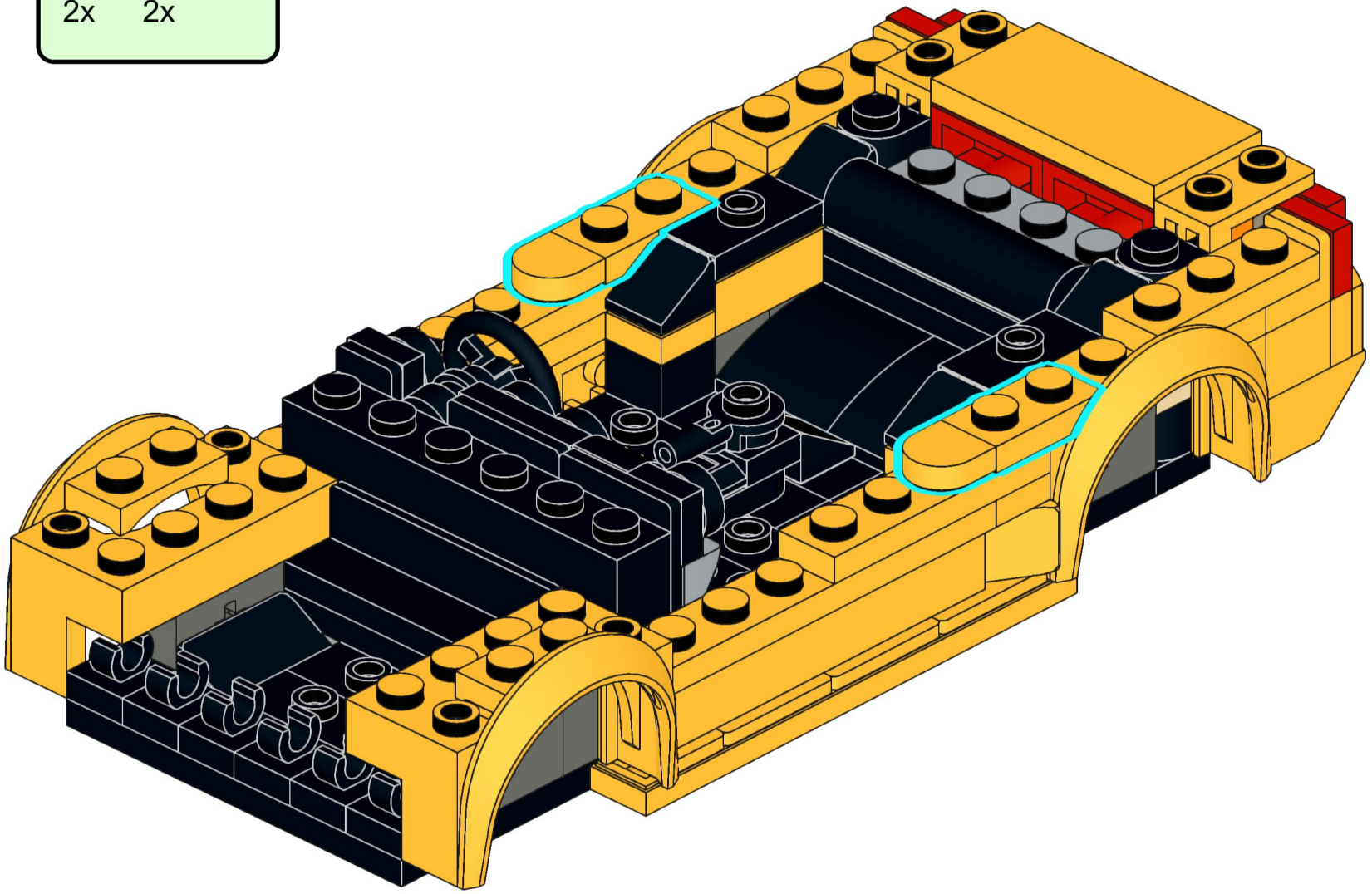

59

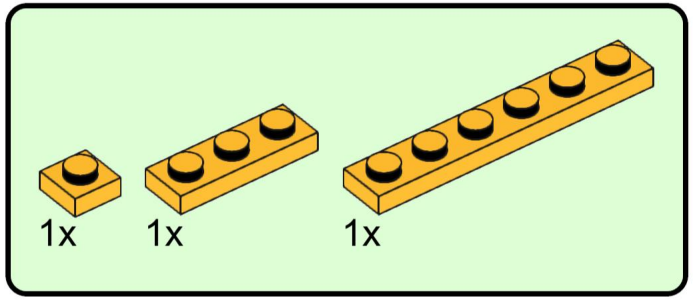

60

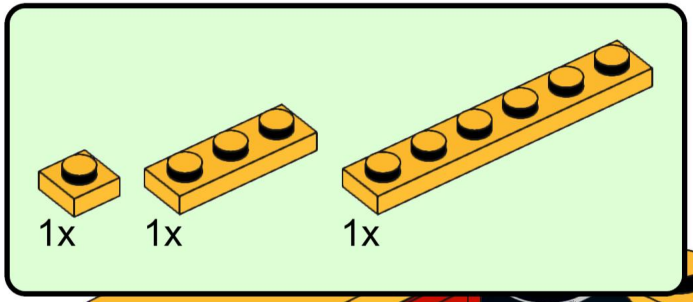

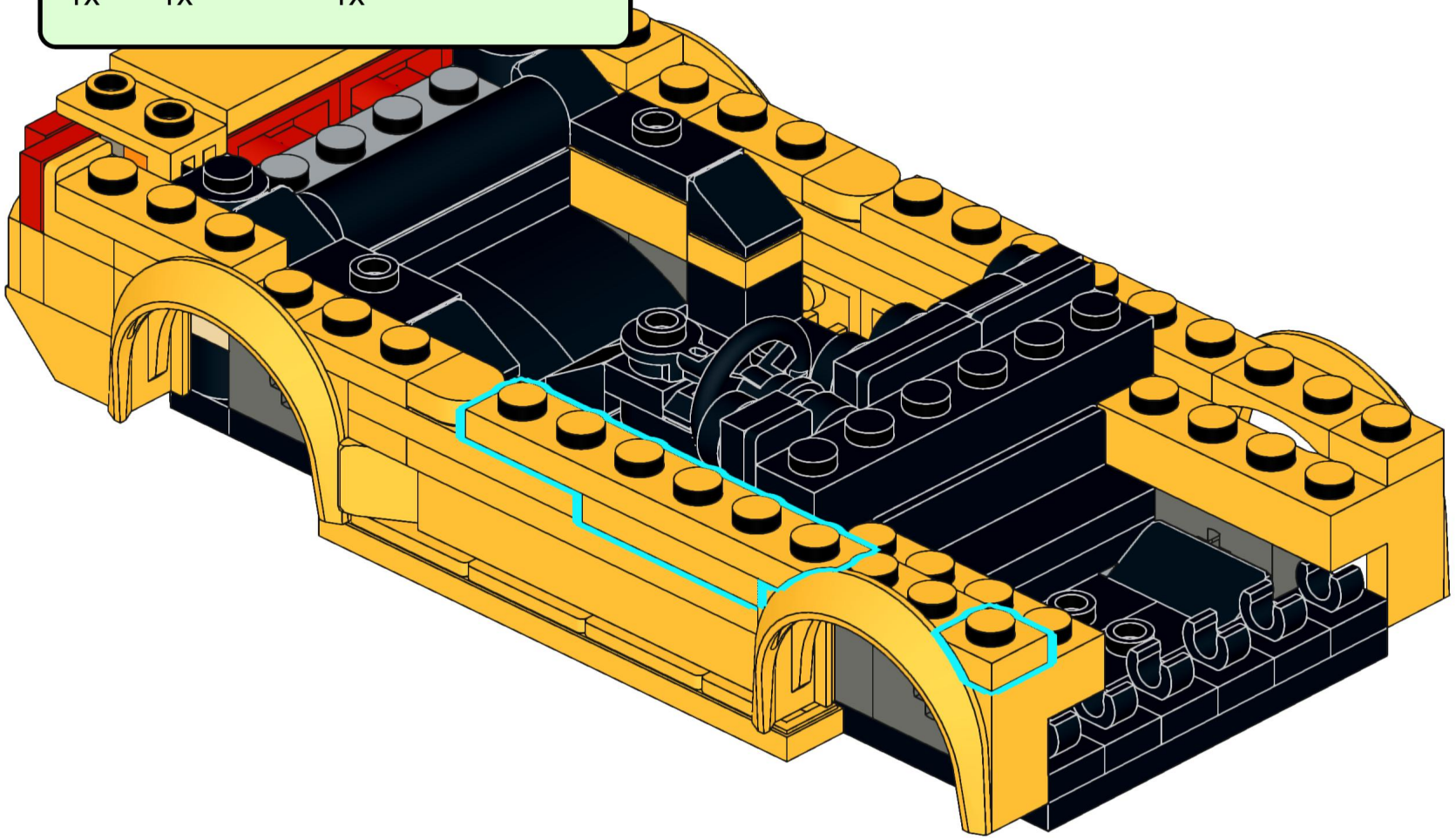

61

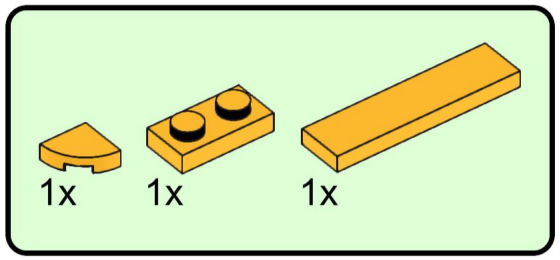

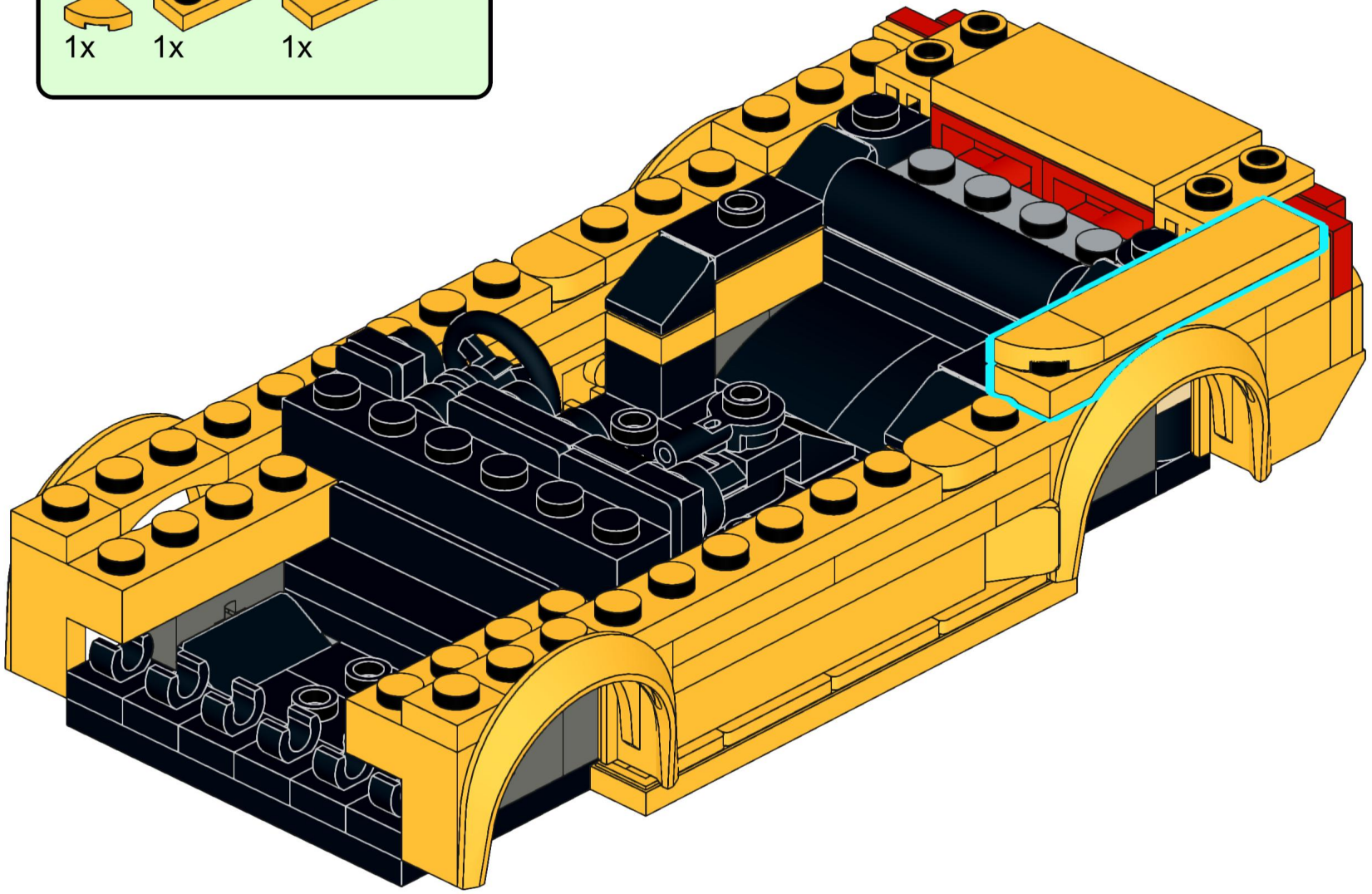

62

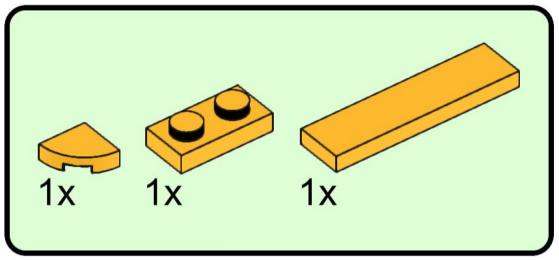

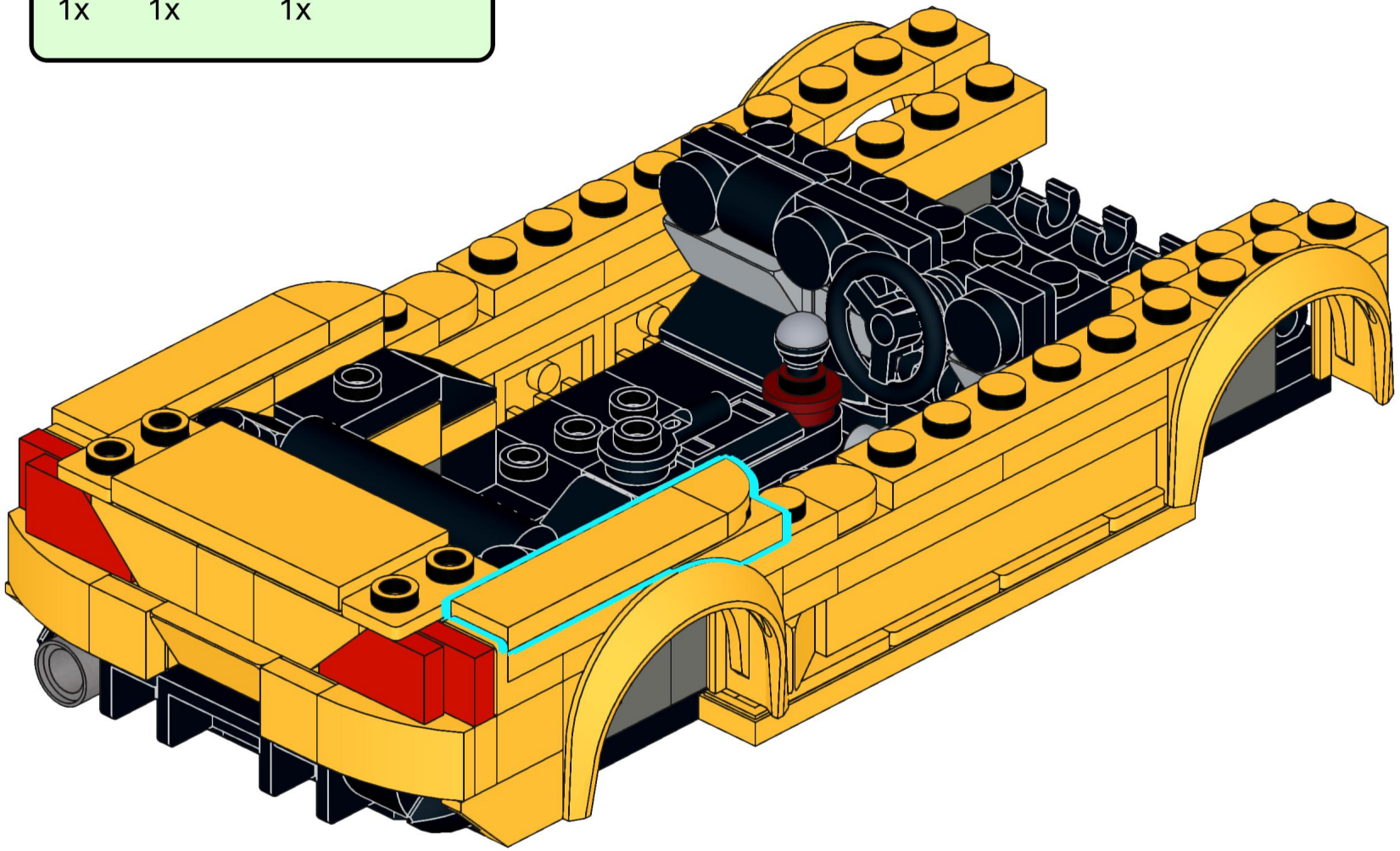

63

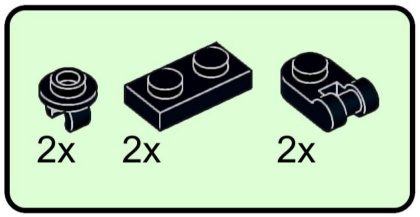

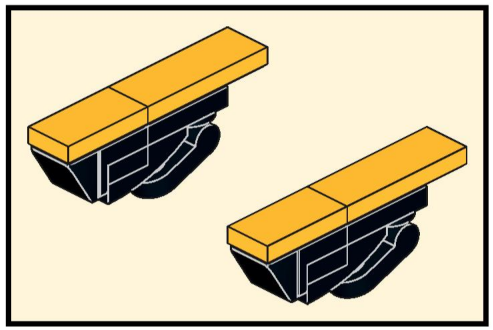

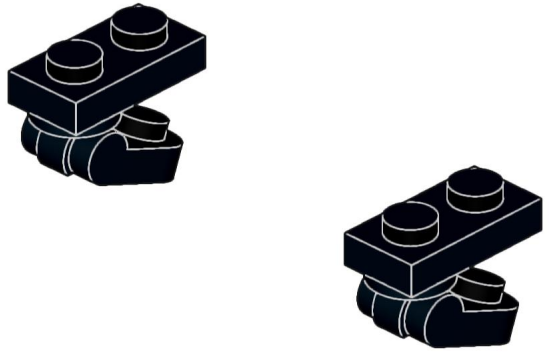

64

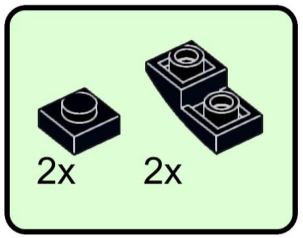

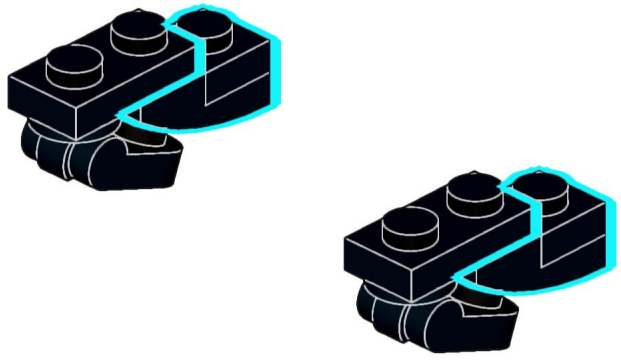

65

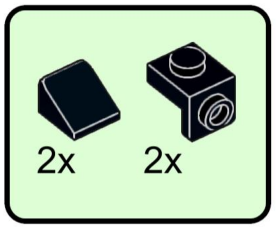

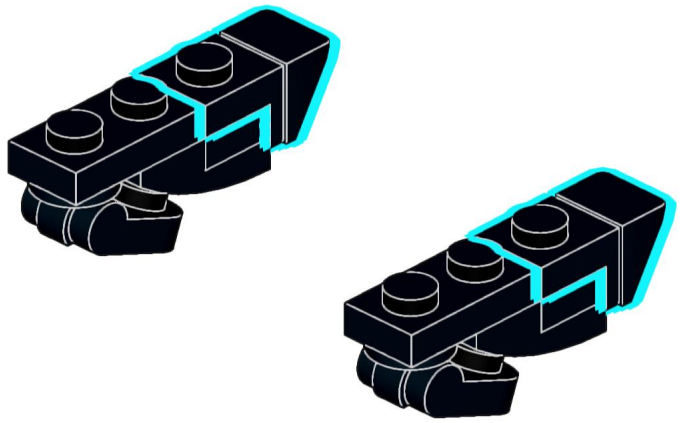

66

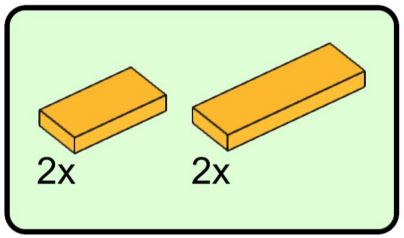

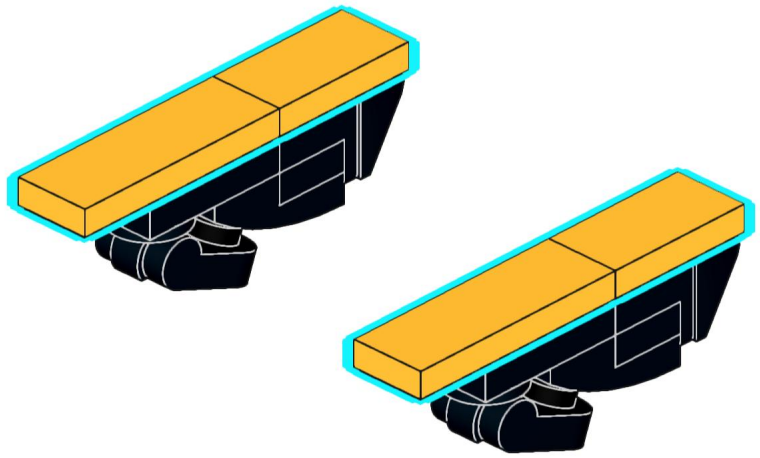

67

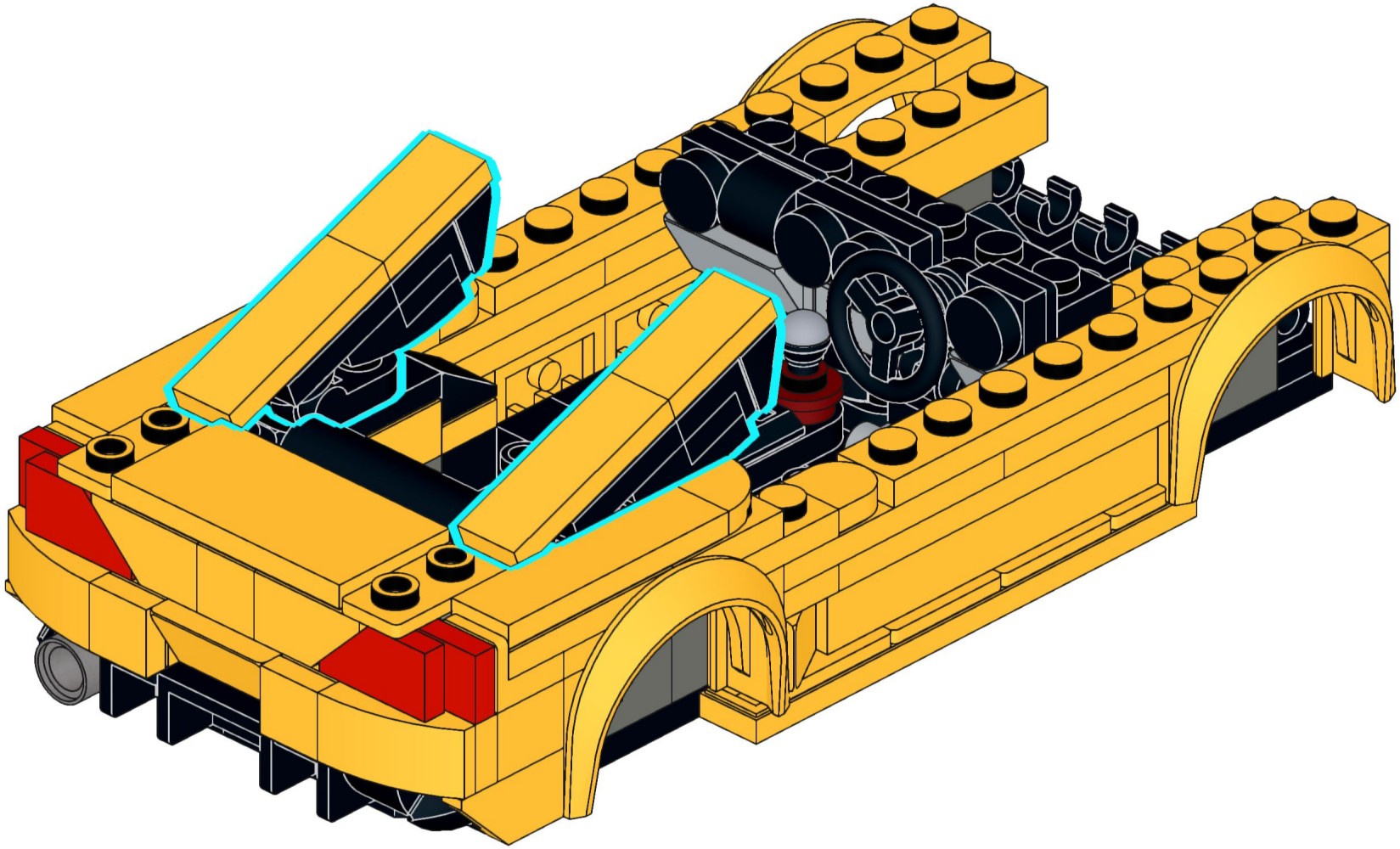

68

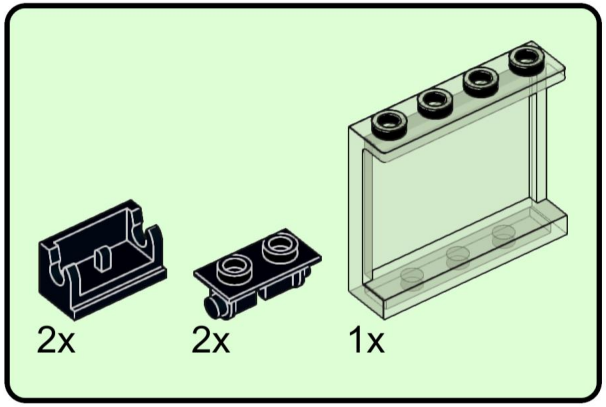

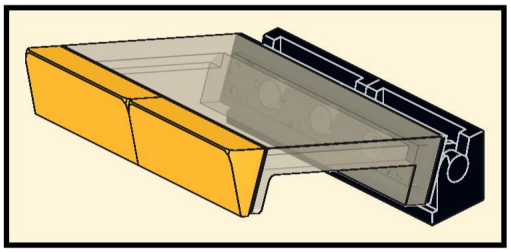

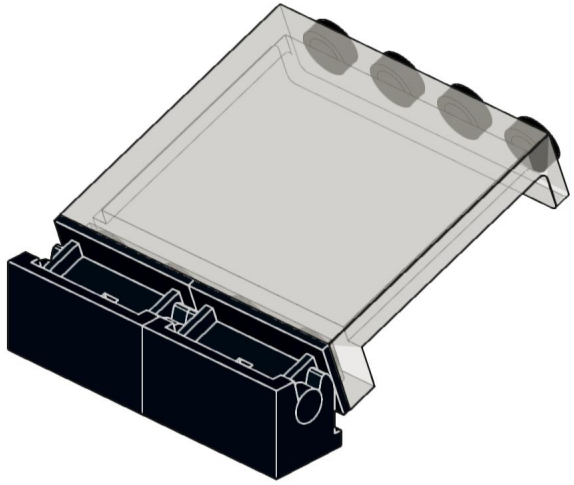

69

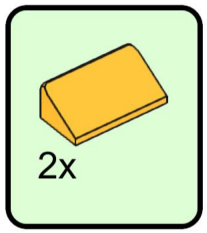

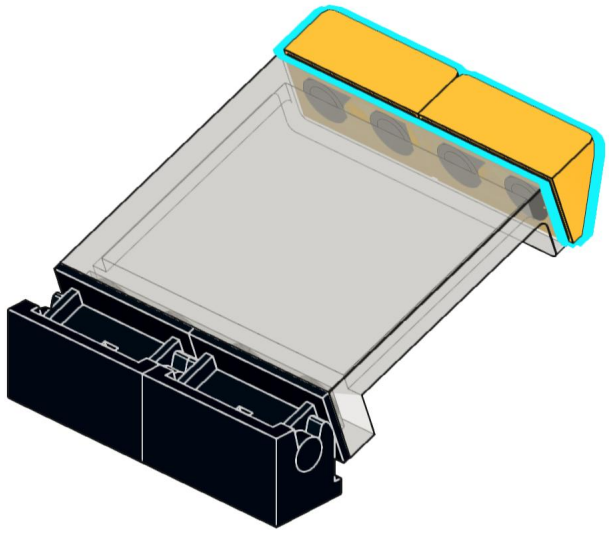

70

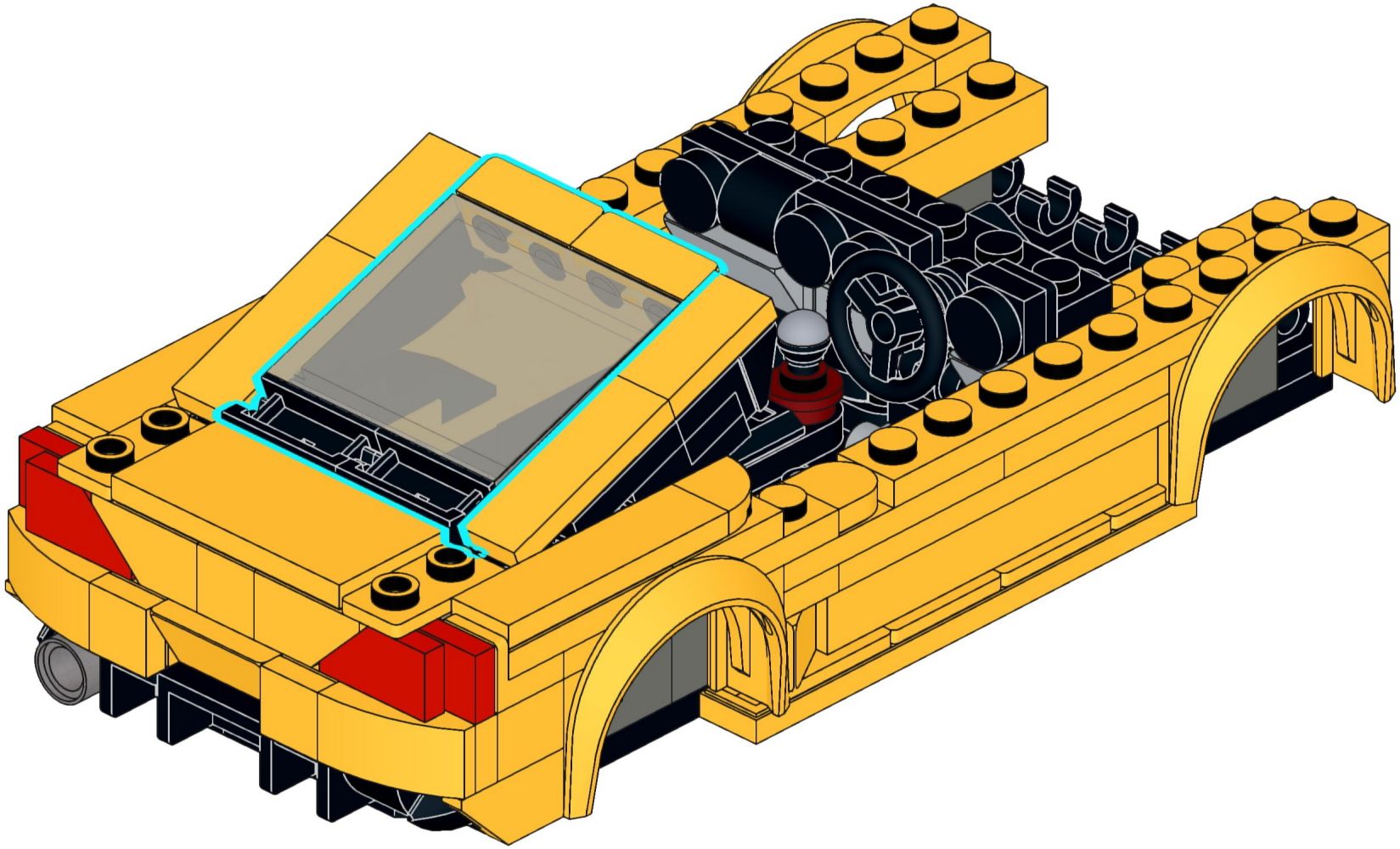

71

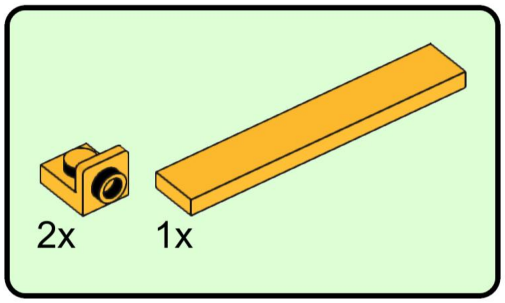

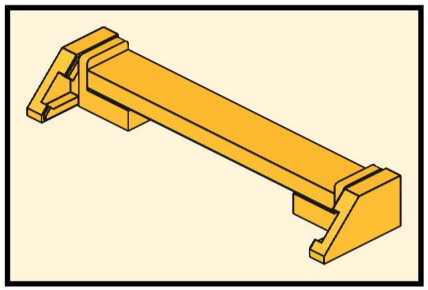

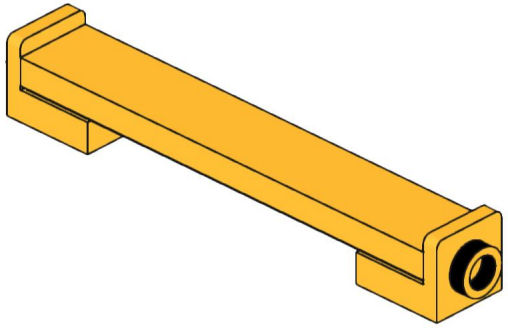

72

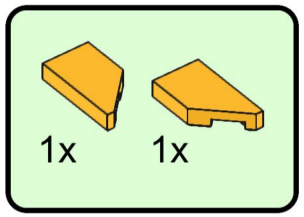

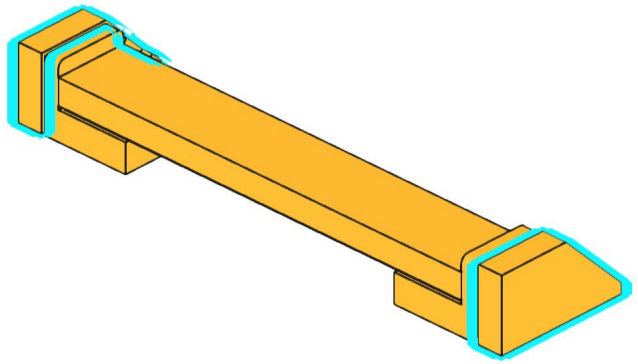

73

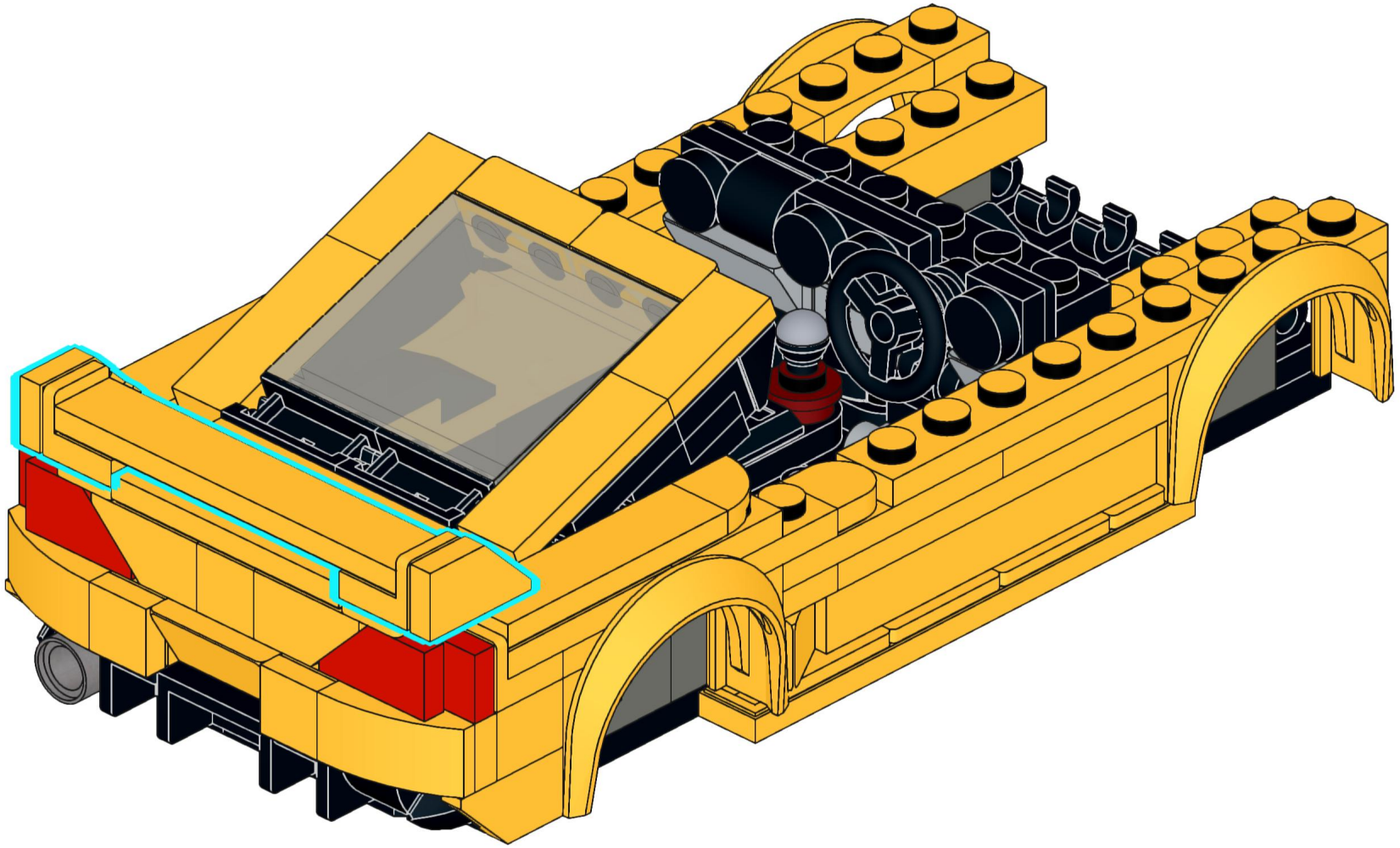

74

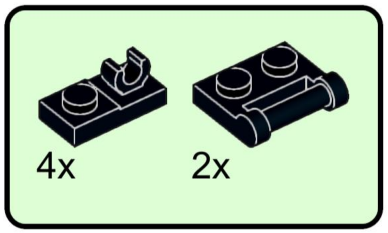





75

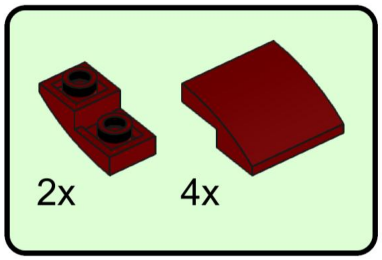



76

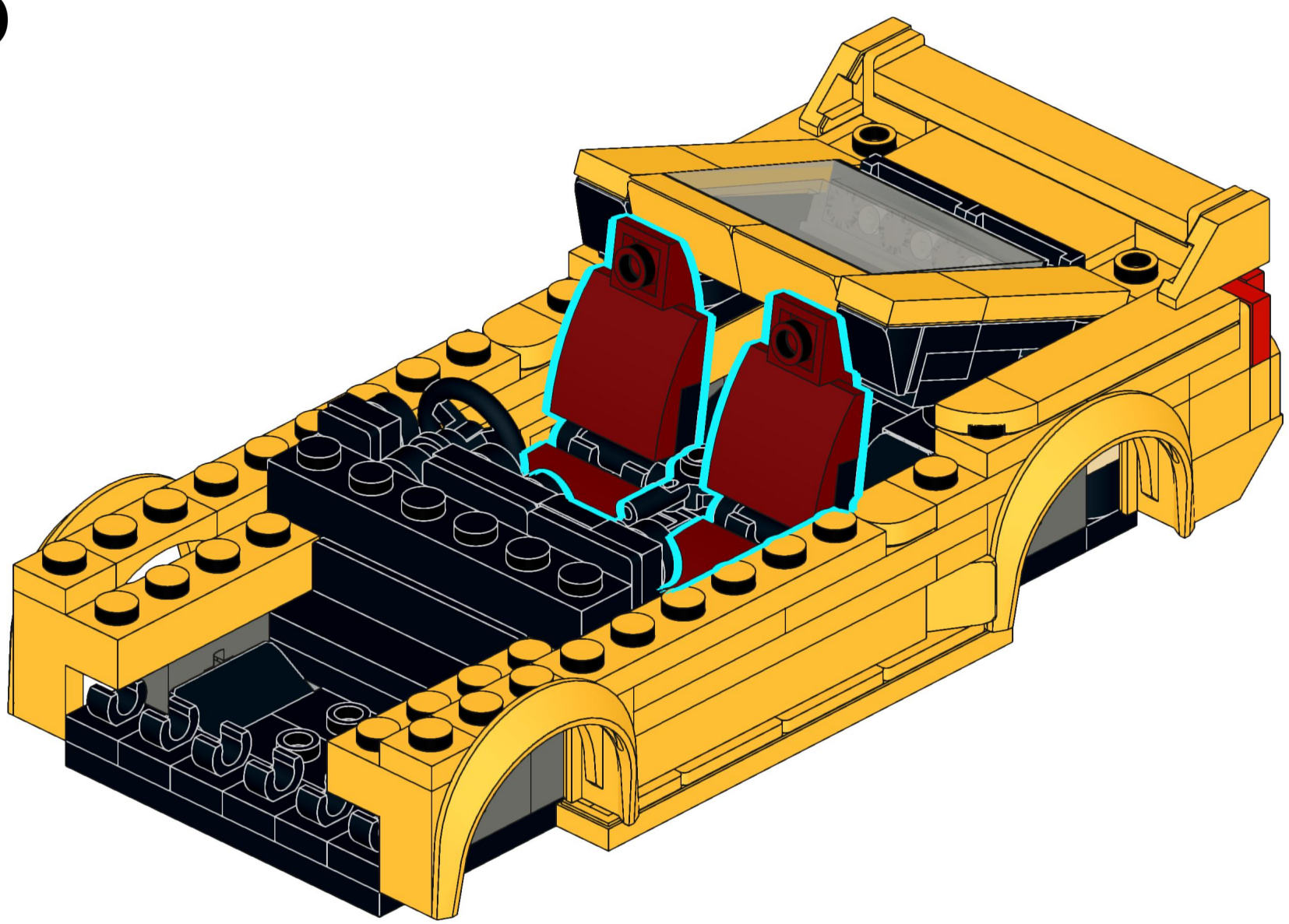

77

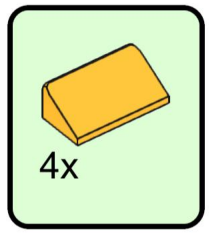

78

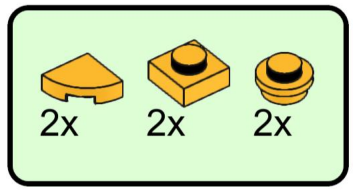

79

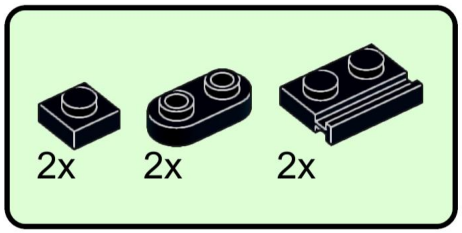

80

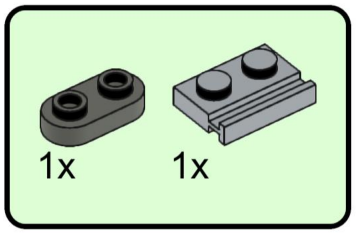

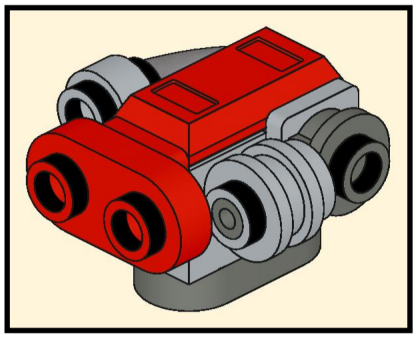

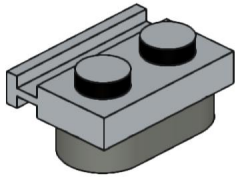

81

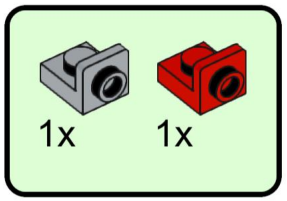

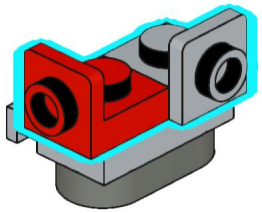

82

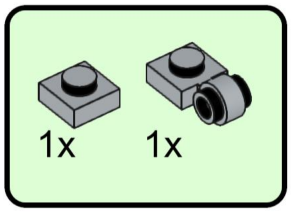

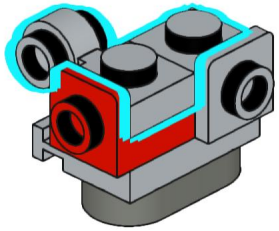

83

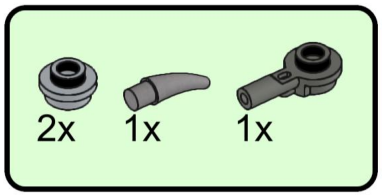

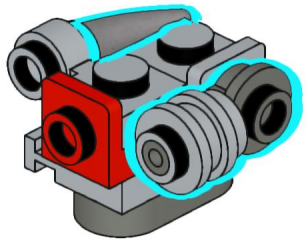

84

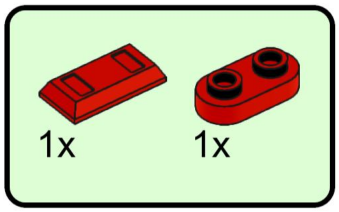

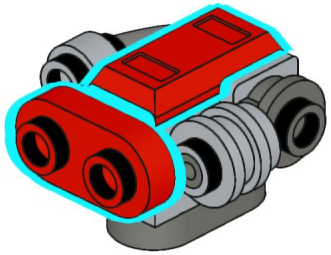

85

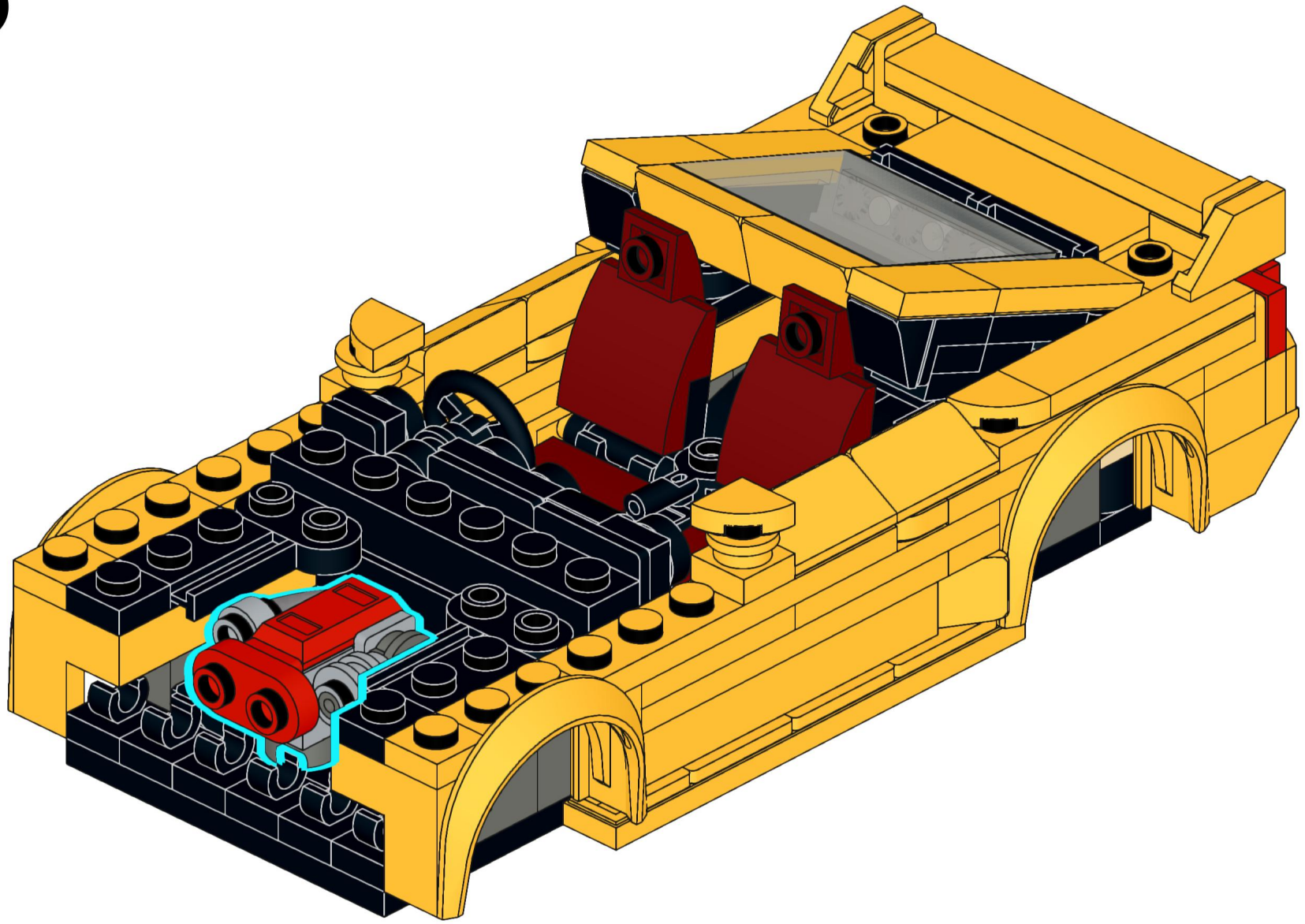

86

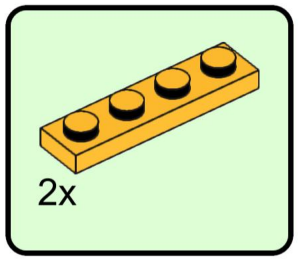

87

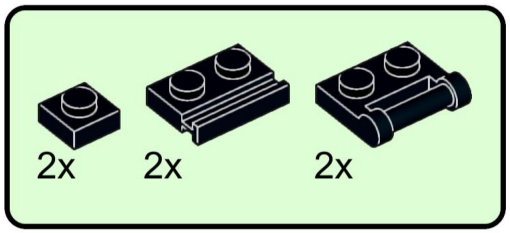

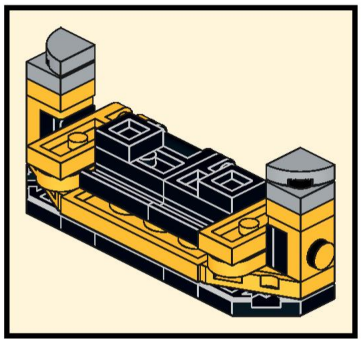

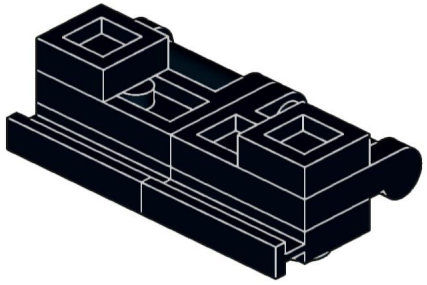

88

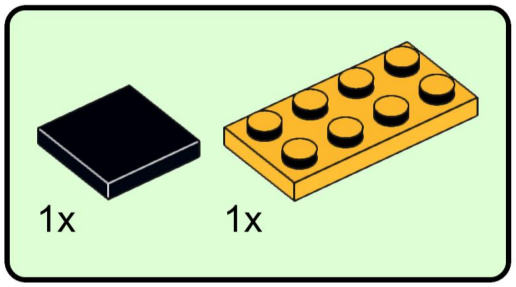

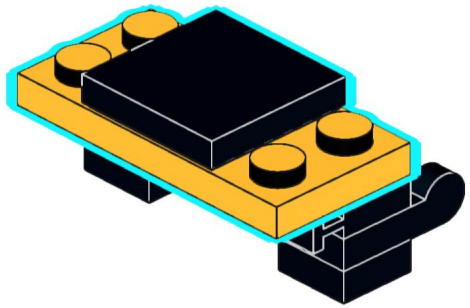

89

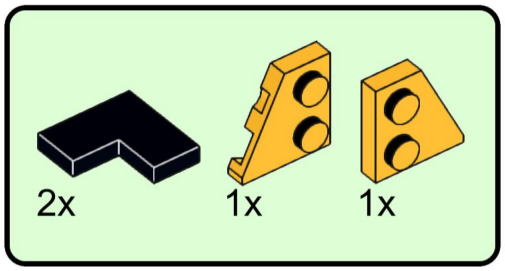

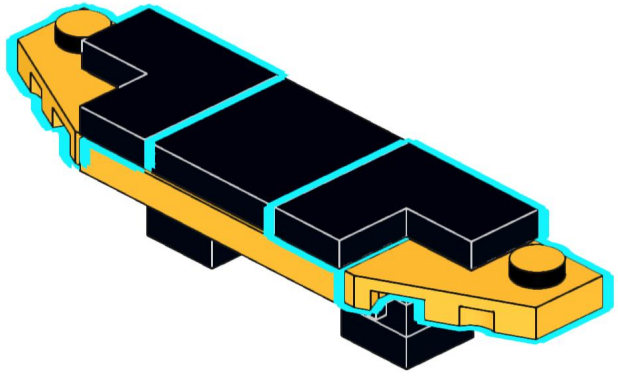

90

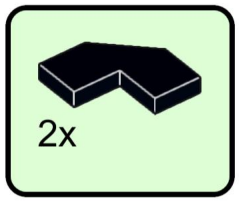

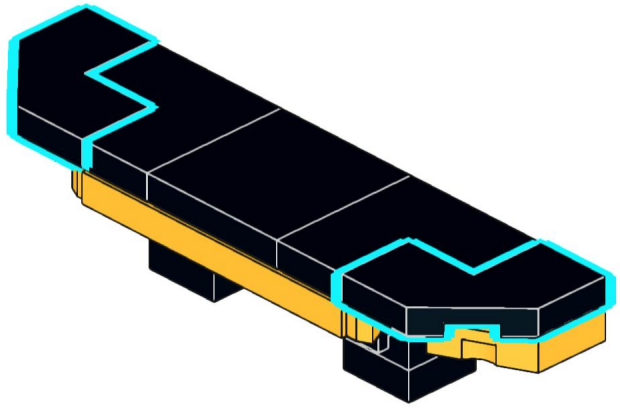

91

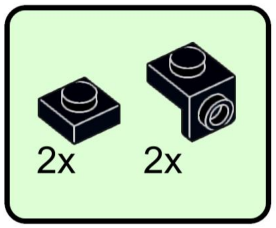

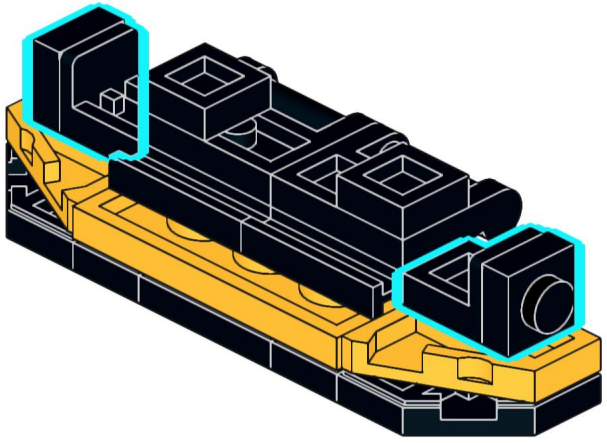

92

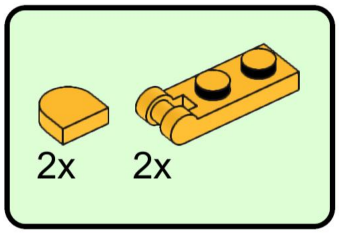

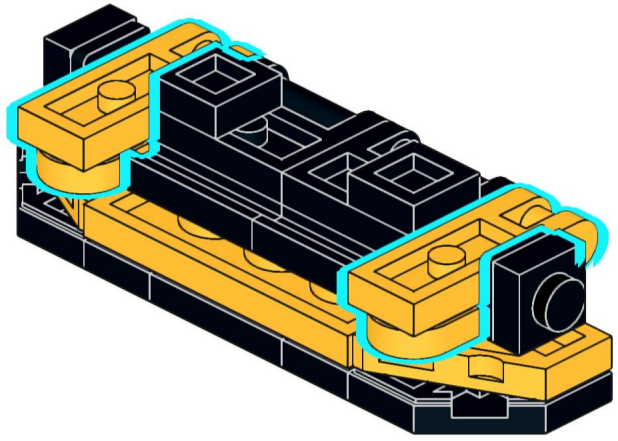

93

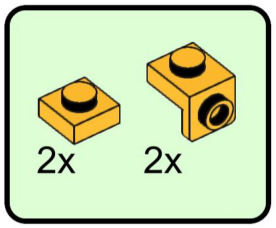

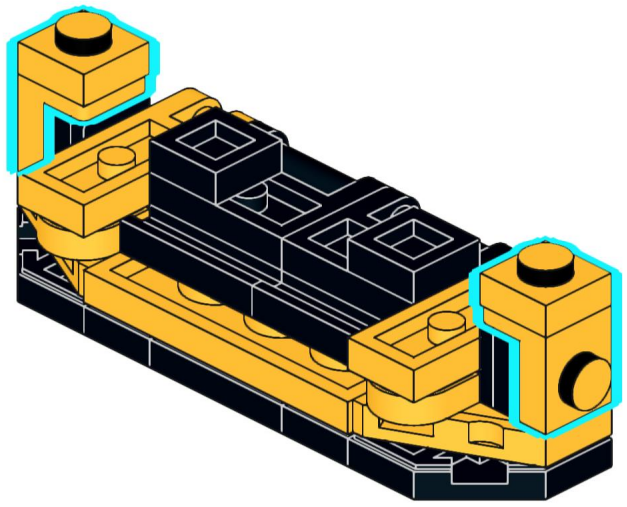

94

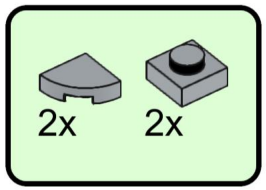

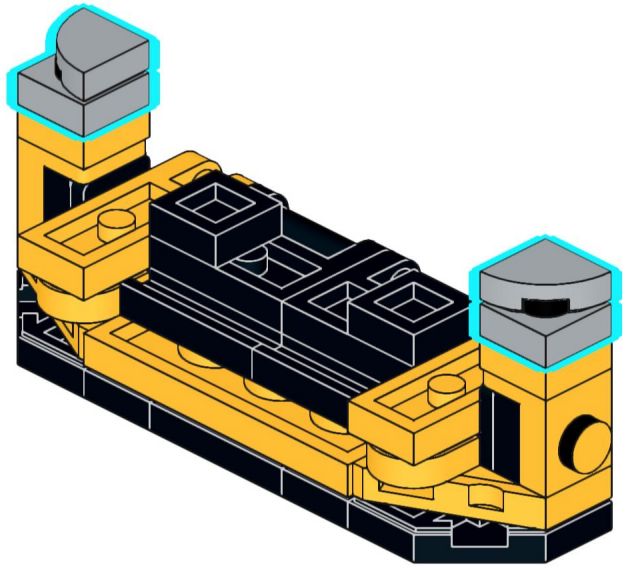

95

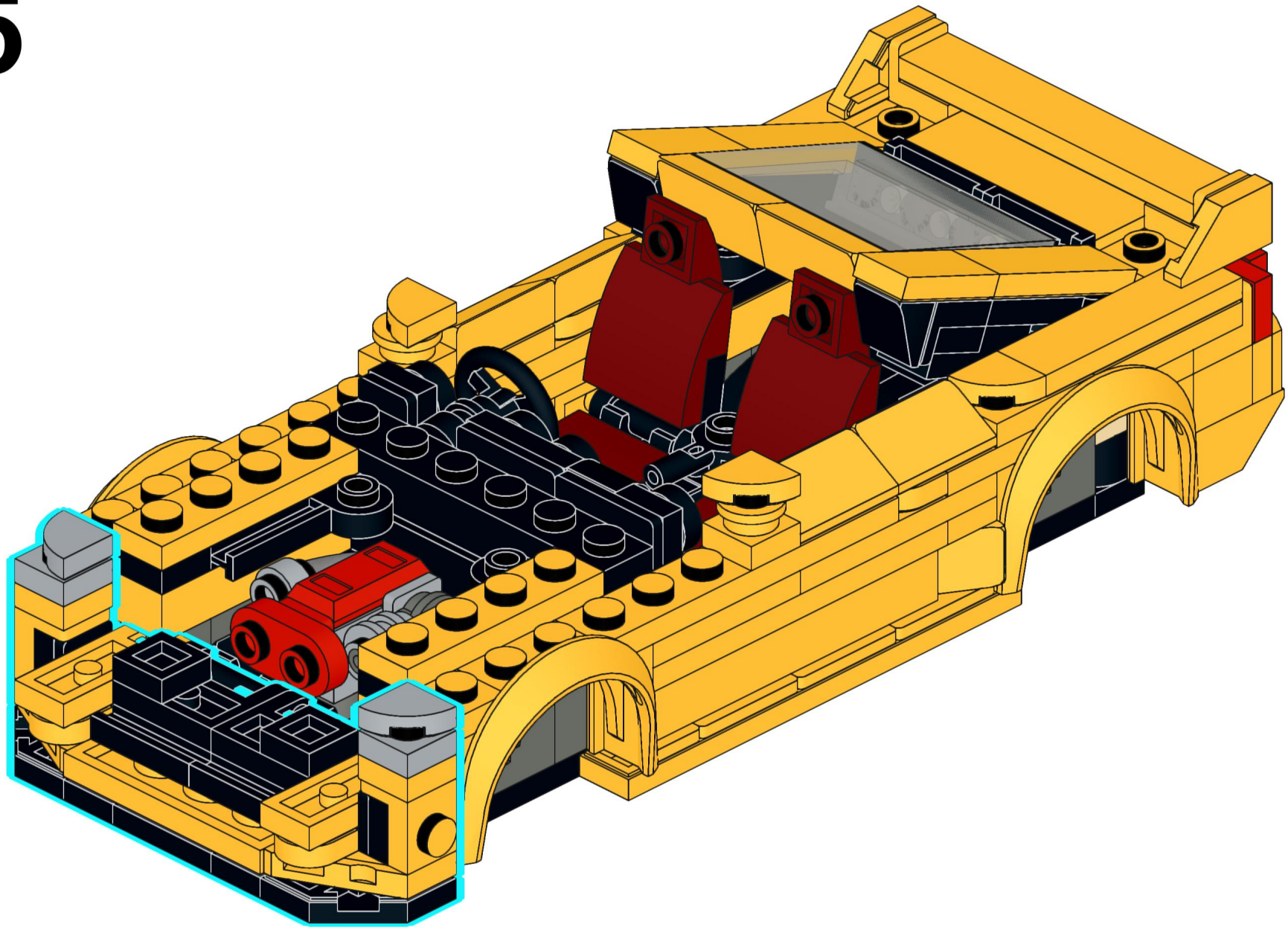

96

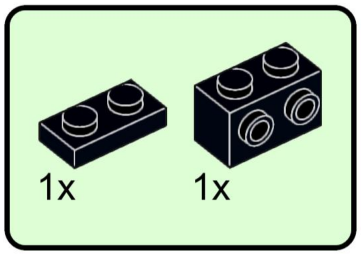

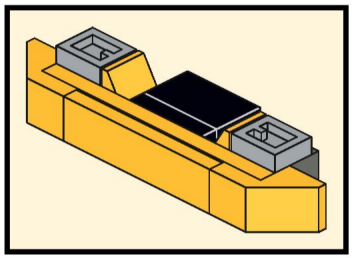

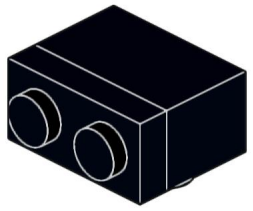

97

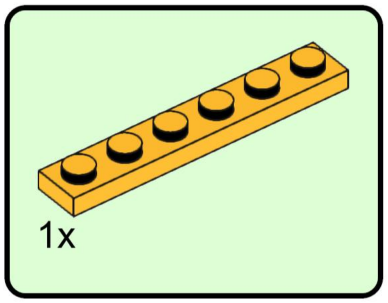

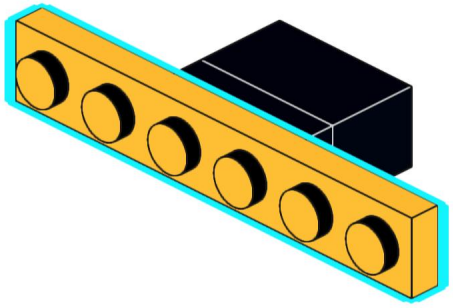

98

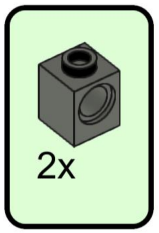

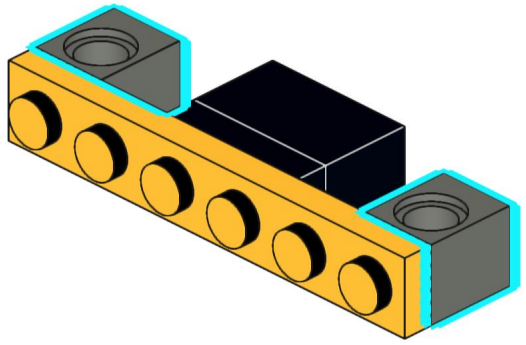

99

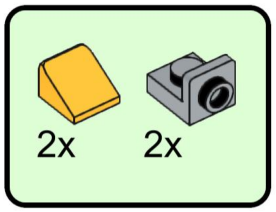

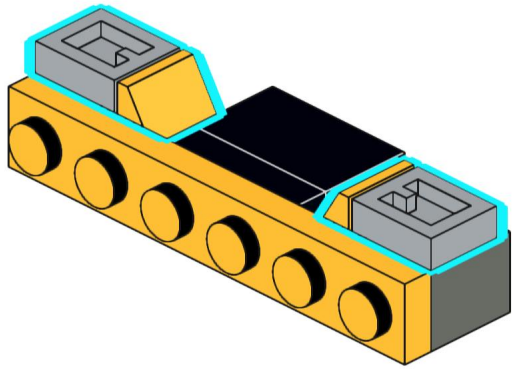

100

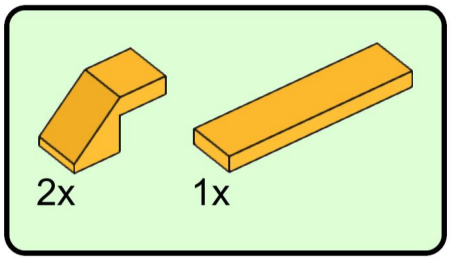

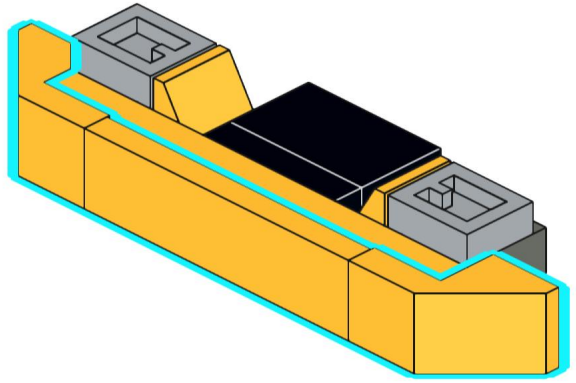

101

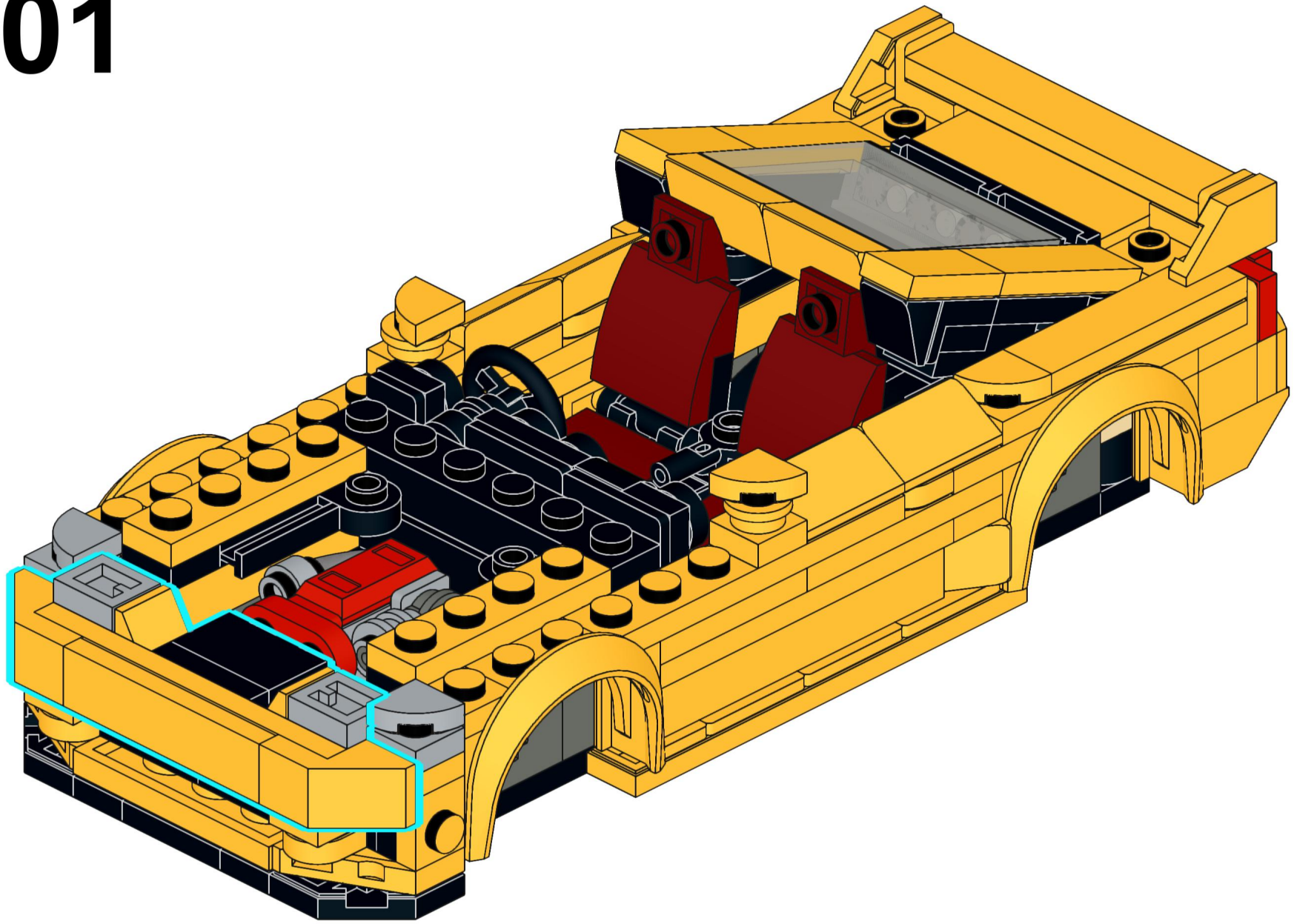

102

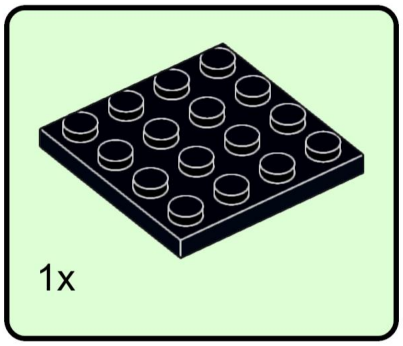

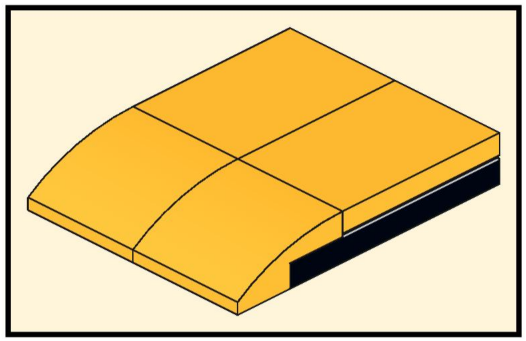

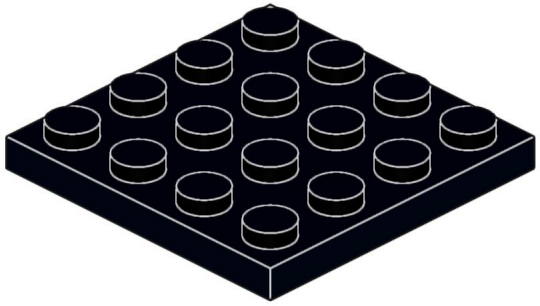

103

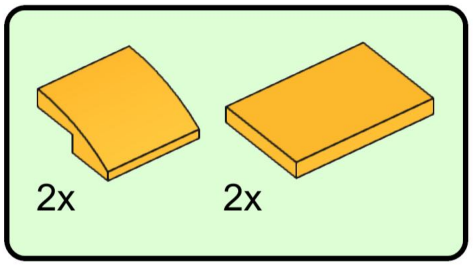

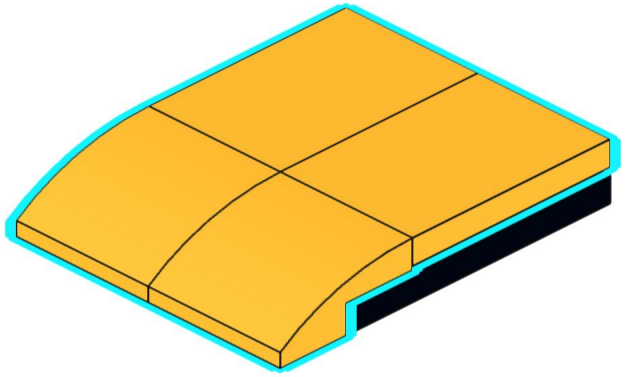

104

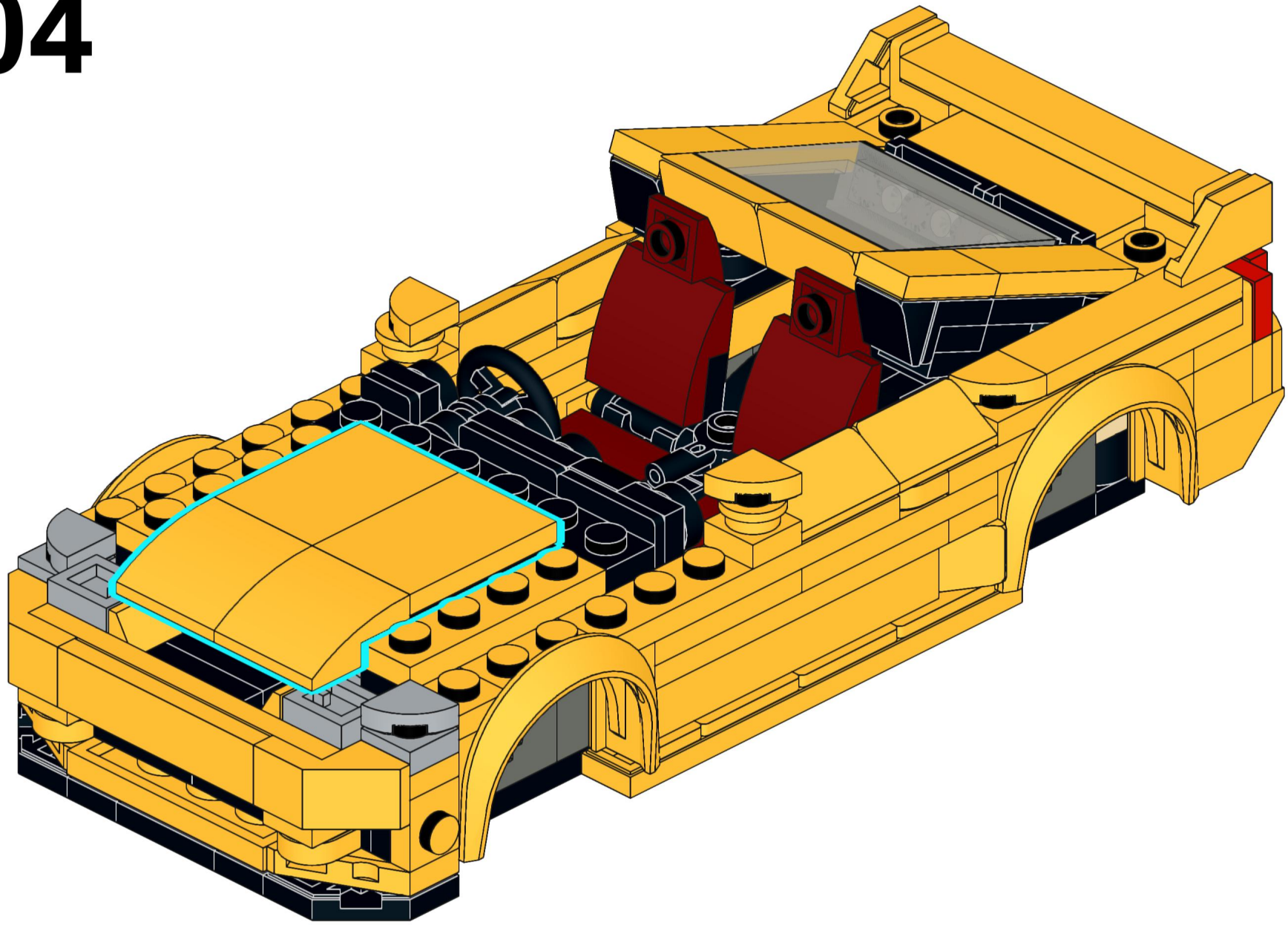

105

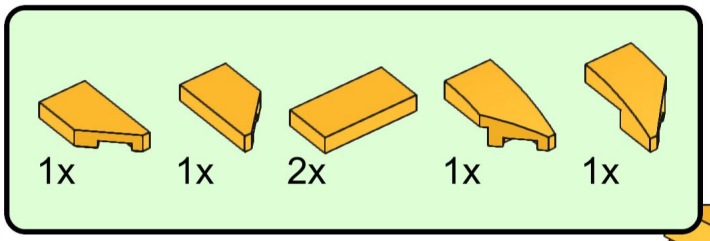

106

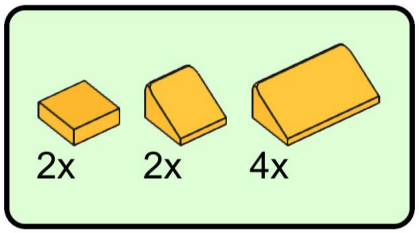

107

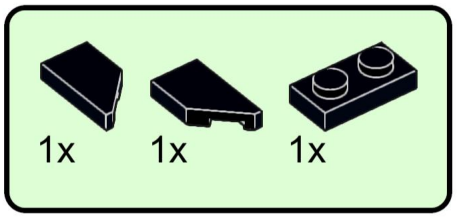

108

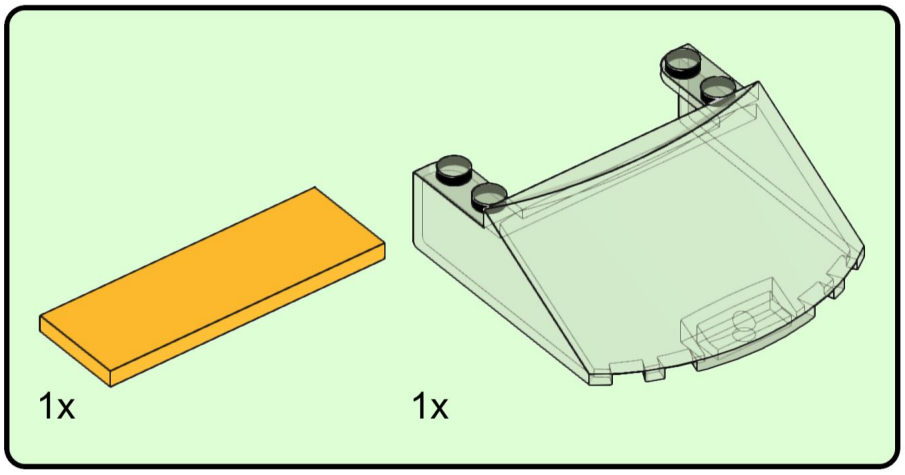

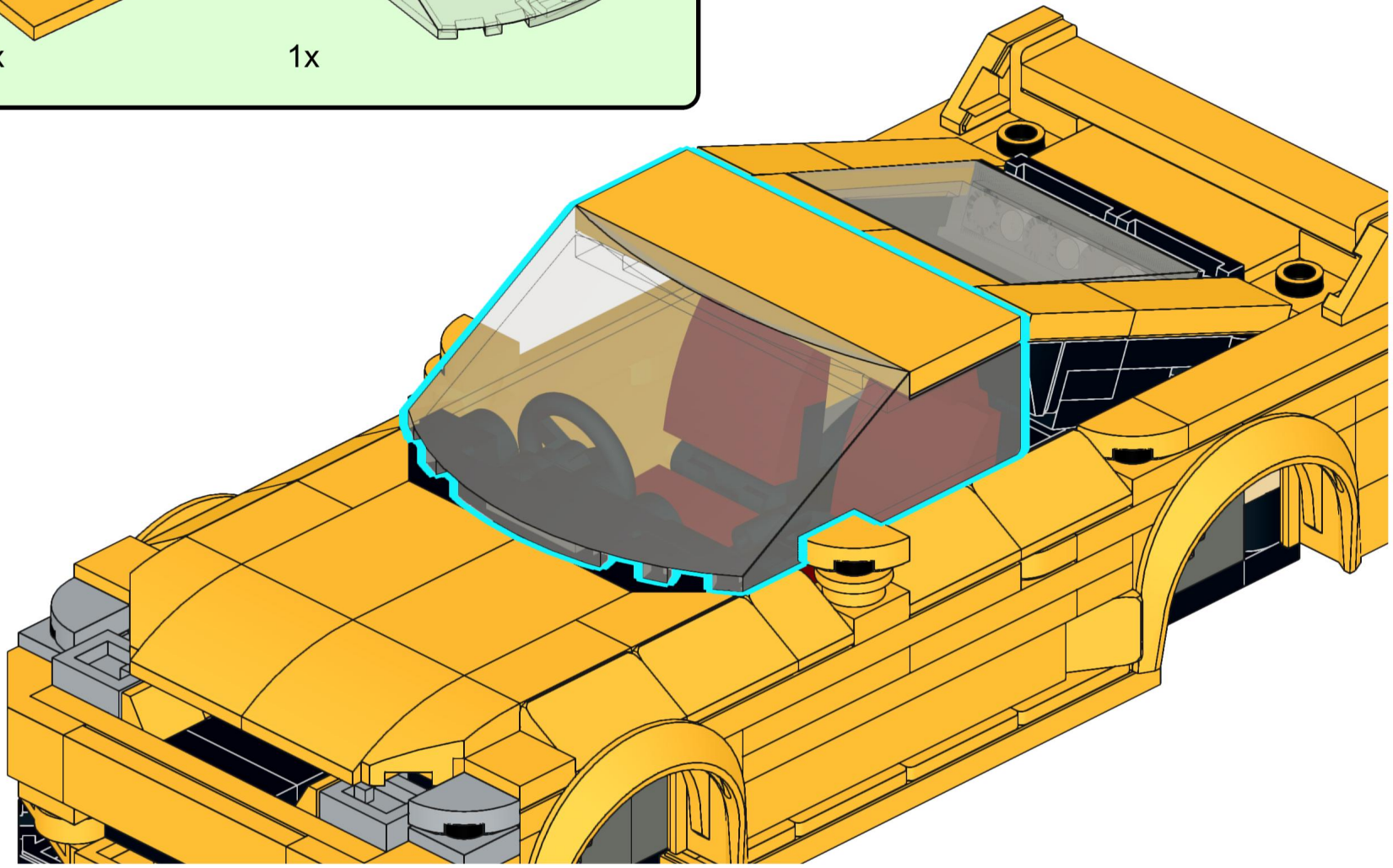

109

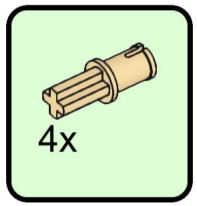

110

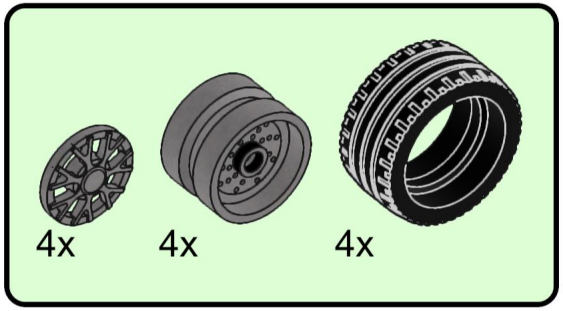

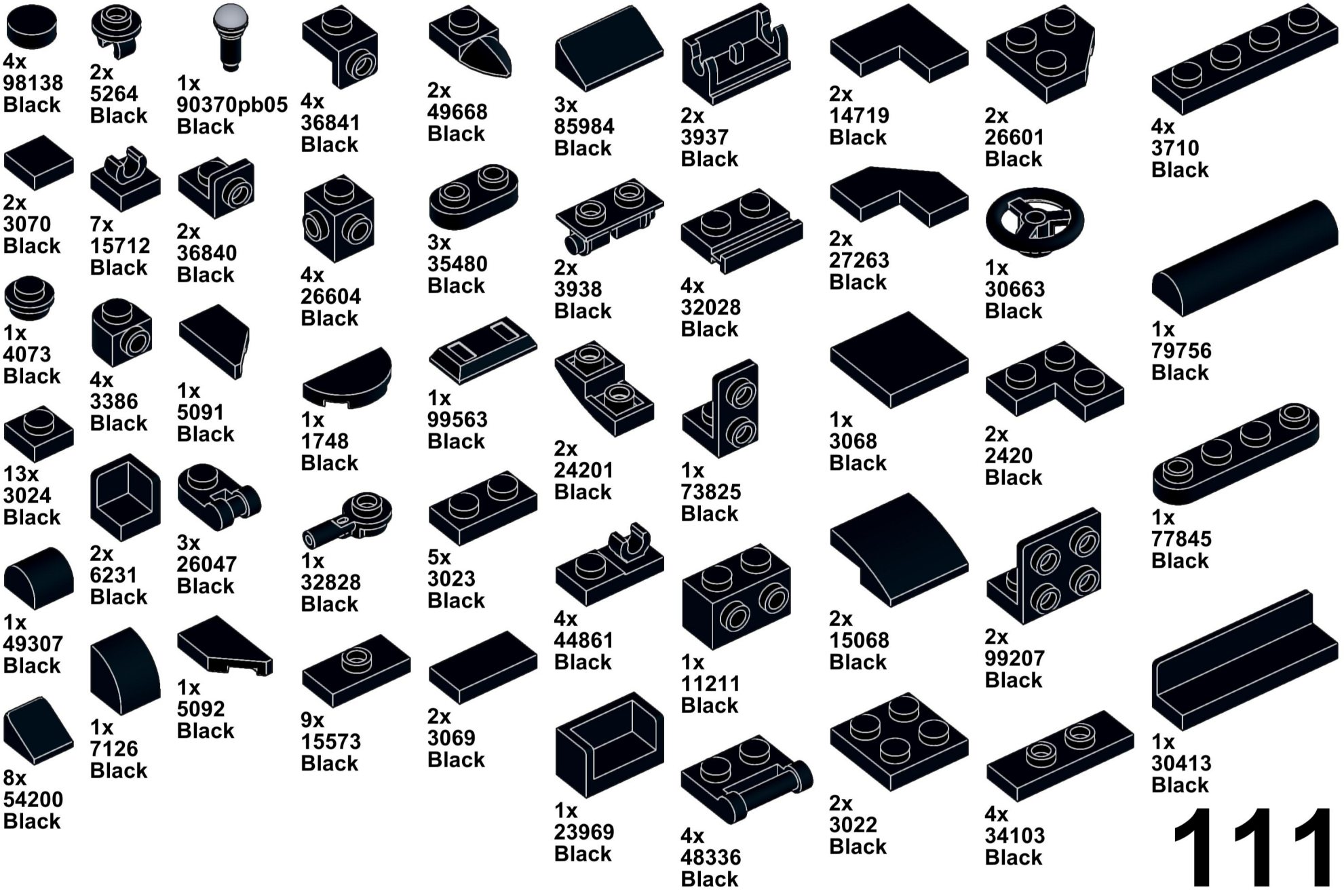
4x
98138
Black
2x
5264
Black
1x
90370pb05
Black
4x
36841
Black
2x
49668
Black
3x
85984
Black
2x
3937
Black
2x
14719
Black
2x
26601
Black
4x
3710
Black
2x
3070
Black
7x
15712
Black
2x
36840
Black
4x
26604
Black
3x
35480
Black
2x
3938
Black
4x
32028
Black
2x
27263
Black
1x
30663
Black
1x
79756
Black
1x
4073
Black
4x
3386
Black
1x
5091
Black
1x
1748
Black
1x
99563
Black
2x
24201
Black
1x
73825
Black
1x
3068
Black
2x
2420
Black
13x
3024
Black
2x
6231
Black
3x
26047
Black
1x
32828
Black
5x
3023
Black
4x
44861
Black
1x
11211
Black
2x
15068
Black
2x
99207
Black
1x
77845
Black
1x
49307
Black
1x
7126
Black
1x
5092
Black
9x
15573
Black
2x
3069
Black
1x
23969
Black
4x
48336
Black
2x
3022
Black
4x
34103
Black
1x
30413
Black
8x
54200
Black

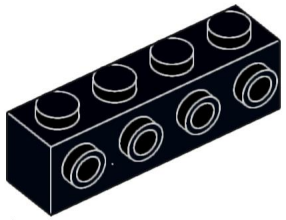

1x
30414
Black

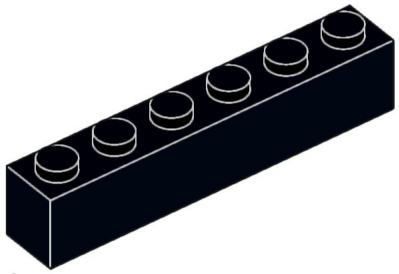

1x
3009
Black



1x
3020
Black

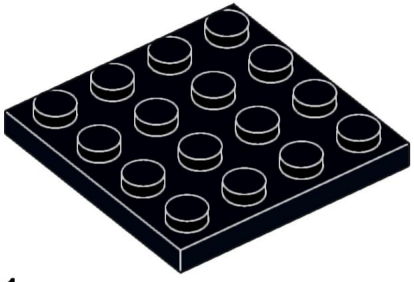

1x
3031
Black

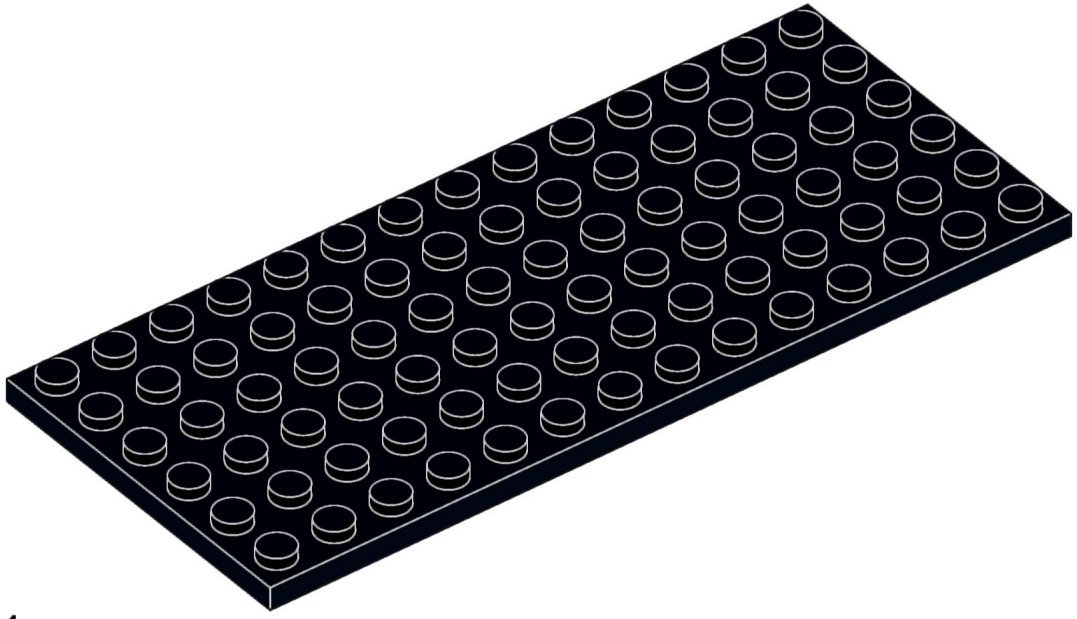

1x
3456
Black

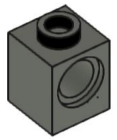

6x
6541
Dark Bluish Gray



1x
35480
Dark Bluish Gray



1x
32828
Dark Bluish Gray

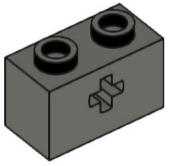

4x
32064
Dark Bluish Gray



2x
25269
Light Bluish Gray



2x
85861
Light Bluish Gray

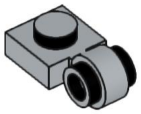

1x
4081b
Light Bluish Gray

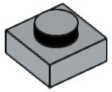

3x
3024
Light Bluish Gray

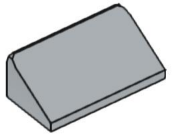

1x
85984
Light Bluish Gray

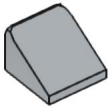

1x
54200
Light Bluish Gray

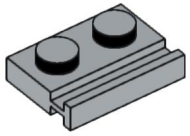

1x
32028
Light Bluish Gray

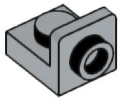

3x
36840
Light Bluish Gray

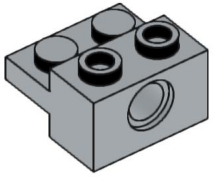

2x
73109
Light Bluish Gray

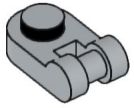

1x
26047
Light Bluish Gray

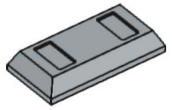

1x
99563
Light Bluish Gray

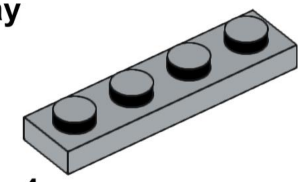

4x
3710
Light Bluish Gray

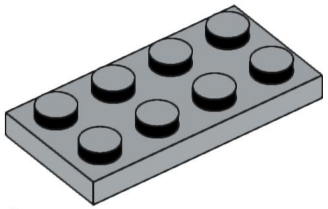

1x
3020
Light Bluish Gray



1x
85861
Dark Red

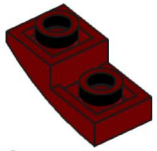

2x
24201
Dark Red

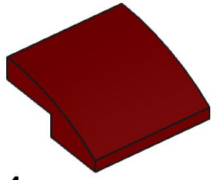

4x
15068
Dark Red



1x
36840
Red

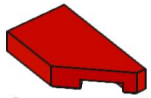

1x
5092
Red

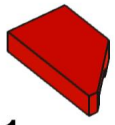

1x
5091
Red

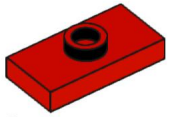

2x
15573
Red

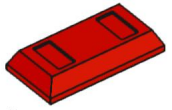

1x
99563
Red

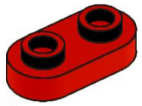

1x
35480
Red

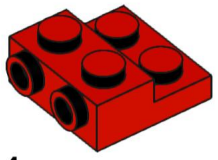

4x
99206
Red

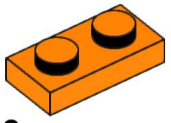

2x
3023
Orange



2x
35480
Dark Tan

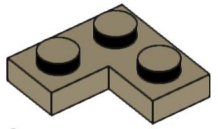

2x
2420
Dark Tan

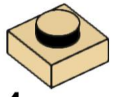

4x
3024
Tan

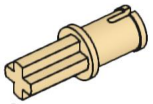

4x
3749
Tan

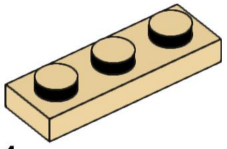

1x
3623
Tan



4x
25269
Bright Light Orange

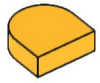

4x
24246
Bright Light Orange

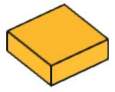

5x
3070
Bright Light Orange

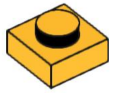

8x
3024
Bright Light Orange



2x
4073
Bright Light Orange



6x
54200
Bright Light Orange



2x
3005
Bright Light Orange



6x
36840
Bright Light Orange

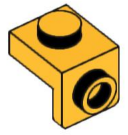

2x
36841
Bright Light Orange

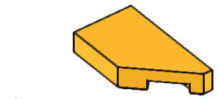

4x
5092
Bright Light Orange

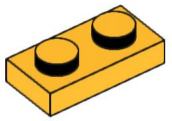

10x
3023
Bright Light Orange

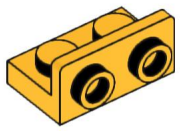

6x
99780
Bright Light Orange

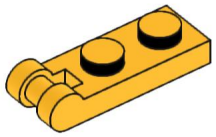

2x
60478
Bright Light Orange

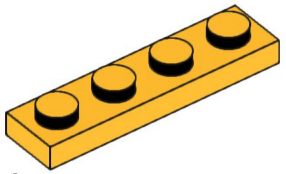

4x
3710
Bright Light Orange

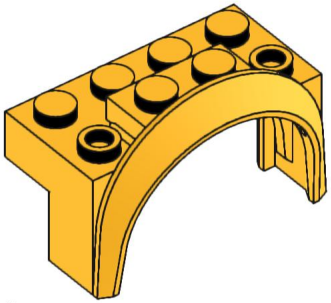

4x
3387
Bright Light Orange



4x
5091
Bright Light Orange

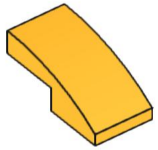

2x
11477
Bright Light Orange

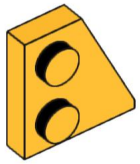

1x
24307
Bright Light Orange



2x
63864
Bright Light Orange

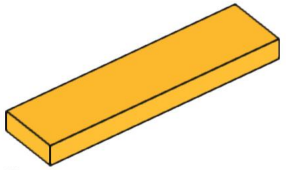

3x
2431
Bright Light Orange

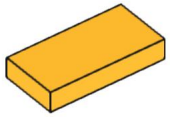

4x
3069
Bright Light Orange

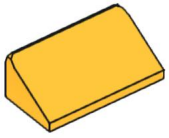

11x
85984
Bright Light Orange

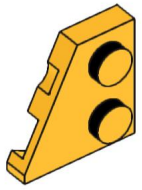

1x
24299
Bright Light Orange

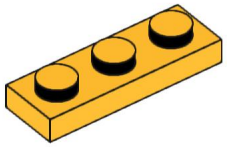

4x
3623
Bright Light Orange

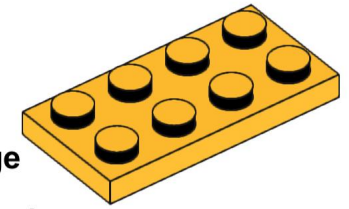

1x
3020
Bright Light Orange

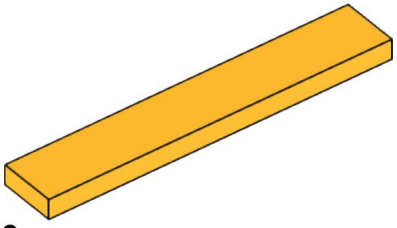

3x
6636
Bright Light Orange

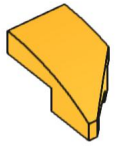

1x
29120
Bright Light Orange

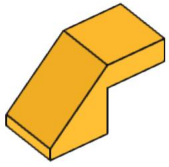

2x
28192
Bright Light Orange

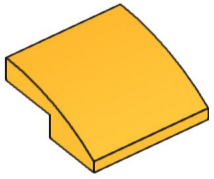

2x
15068
Bright Light Orange

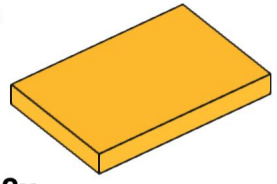

2x
26603
Bright Light Orange

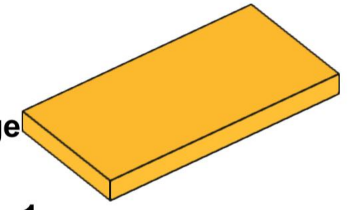

1x
87079
Bright Light Orange

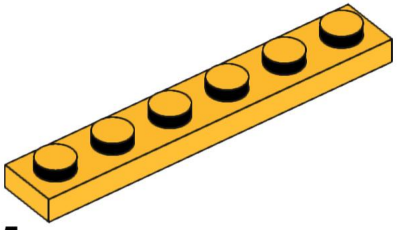

5x
3666
Bright Light Orange

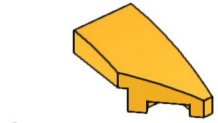

1x
29119
Bright Light Orange



2x
73825
Bright Light Orange

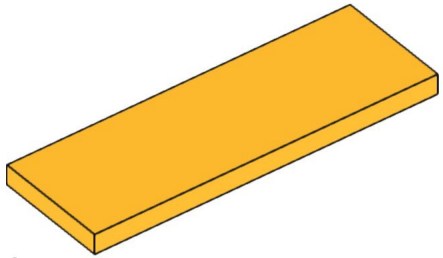

1x
69729
Bright Light Orange

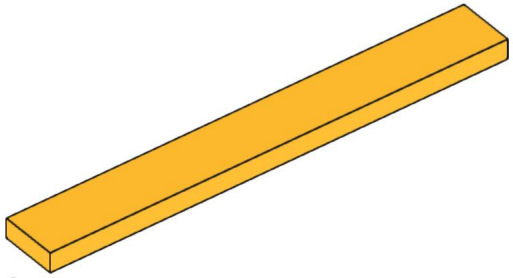

2x
4162
Bright Light Orange



2x
98138
Dark Turquoise

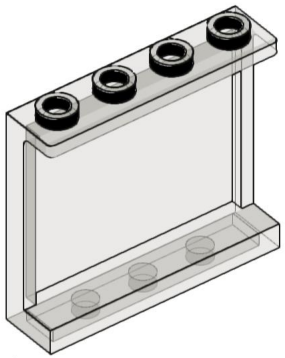

1x
60581
Trans-Brown

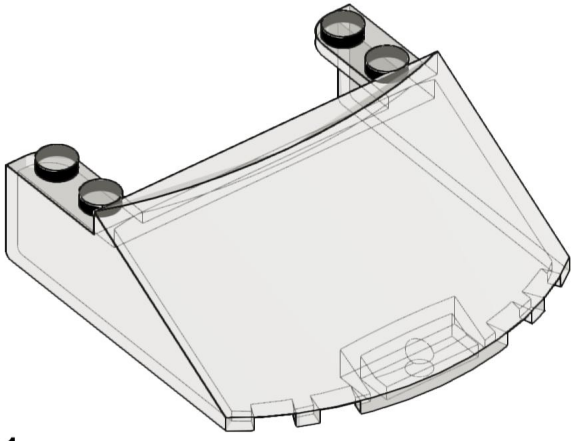

1x
65632
Trans-Brown



1x
53451
Flat Silver

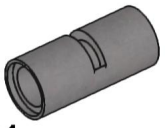

1x
62462
Flat Silver



4x
18979b
Flat Silver

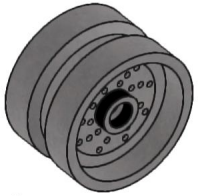

4x
66727
Flat Silver



4x
18977
Rubber Black