1



2

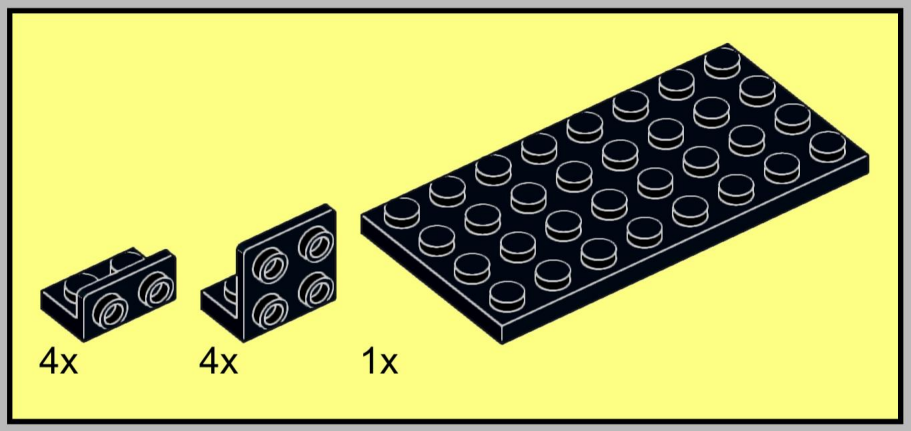

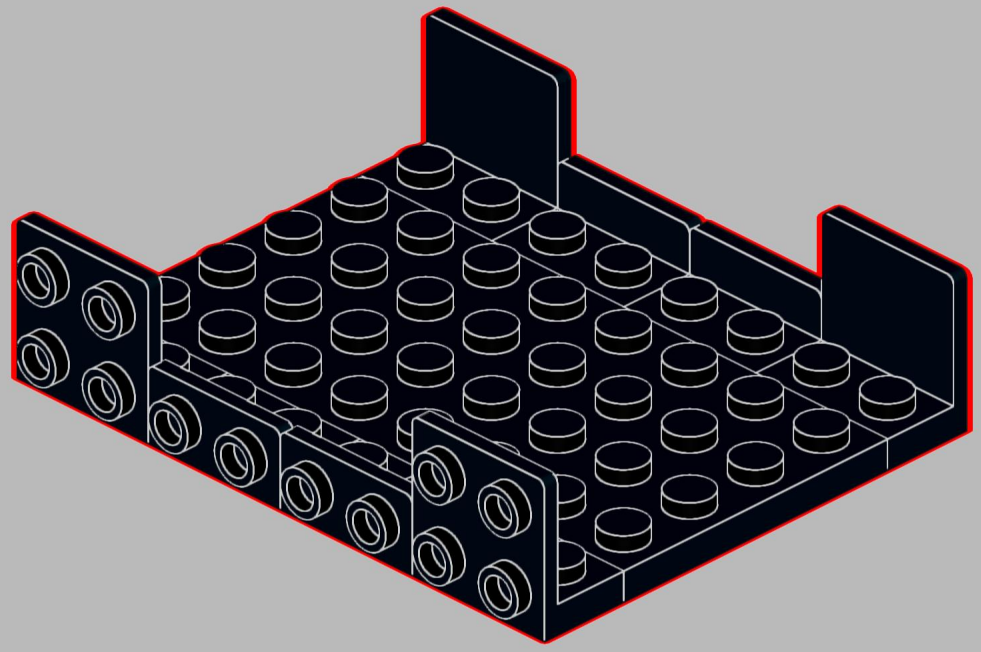

3

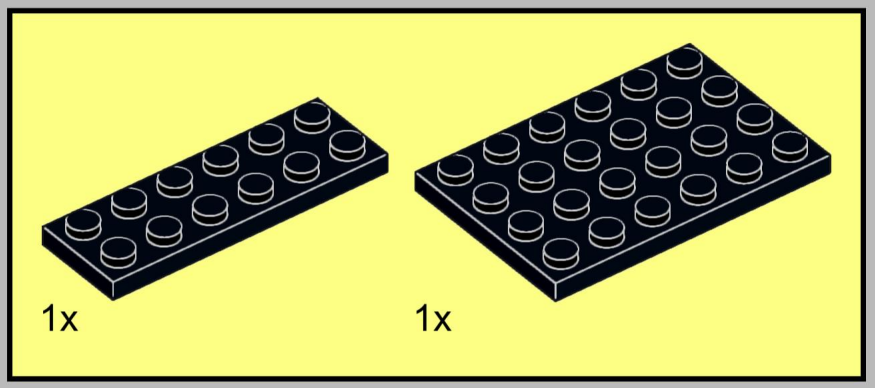

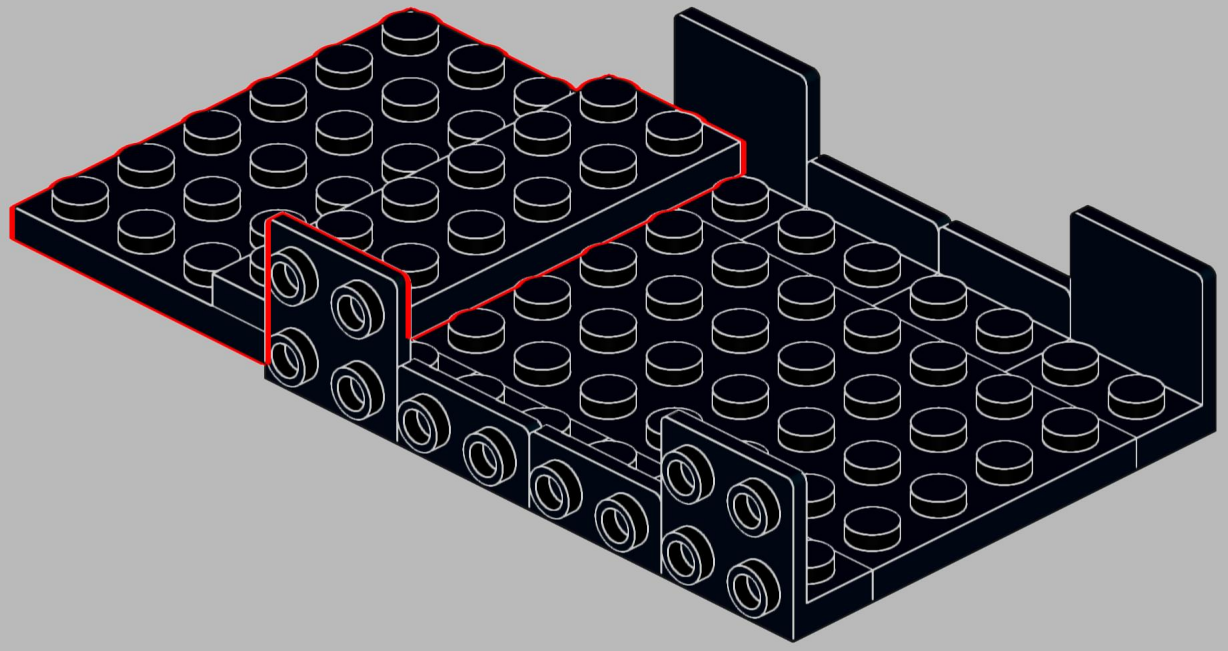

4

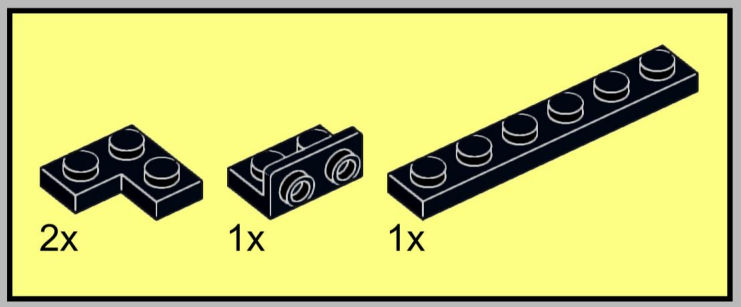

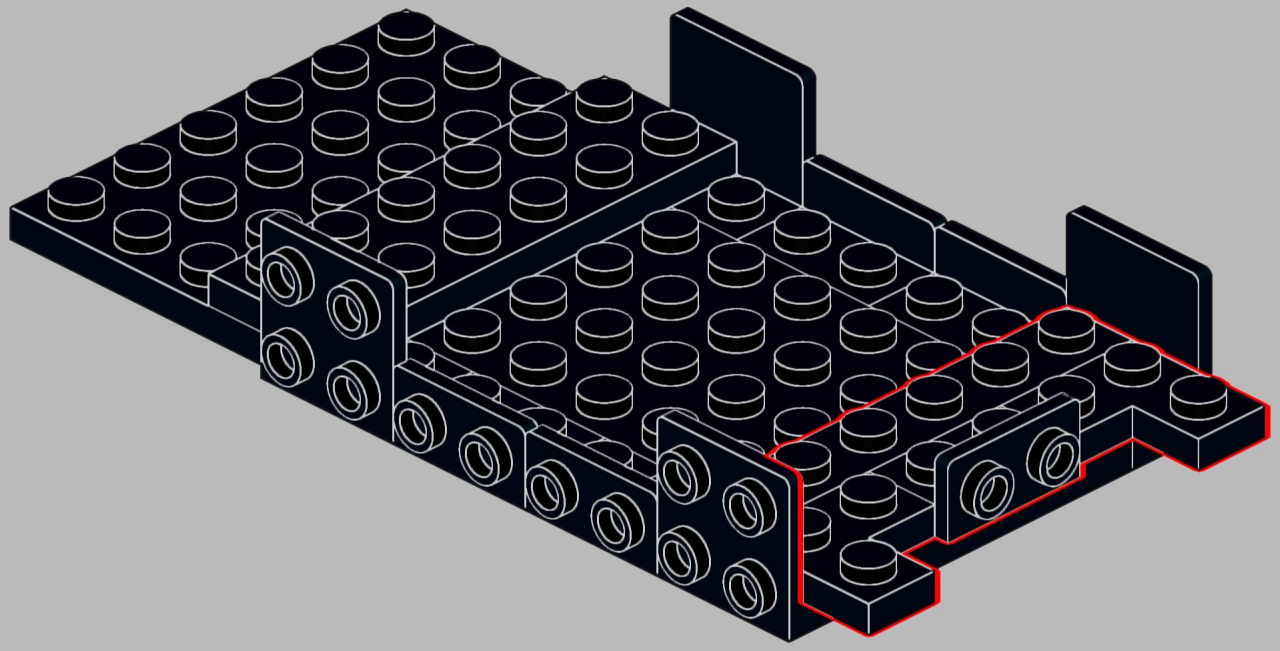

5

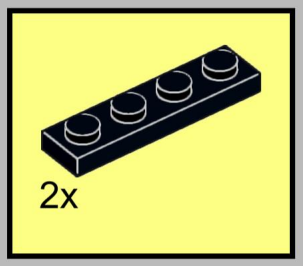

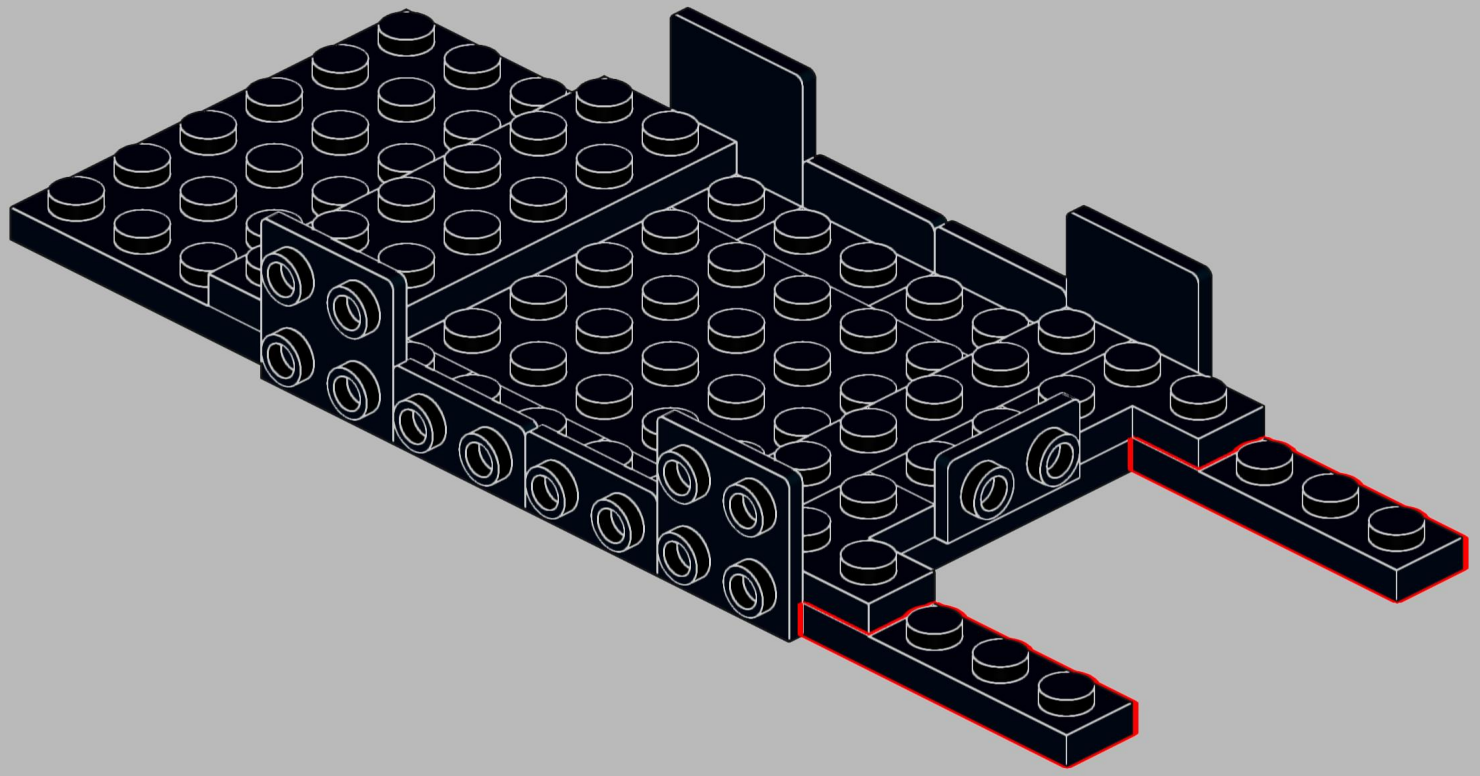

6

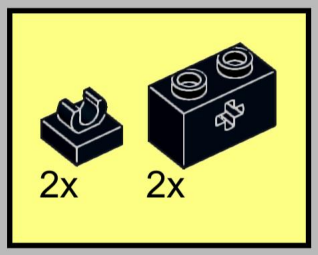

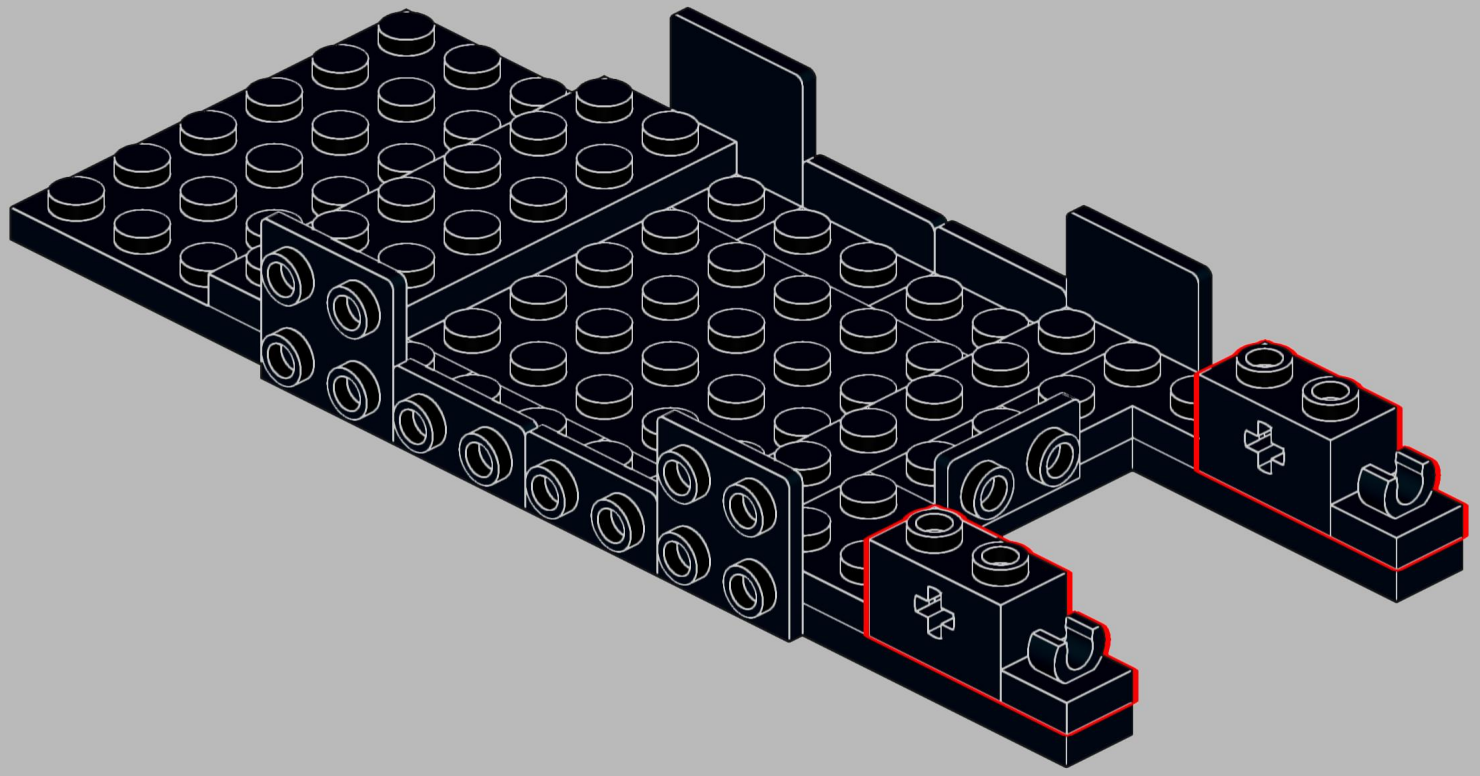

7

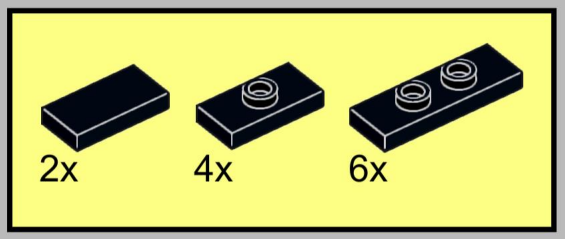

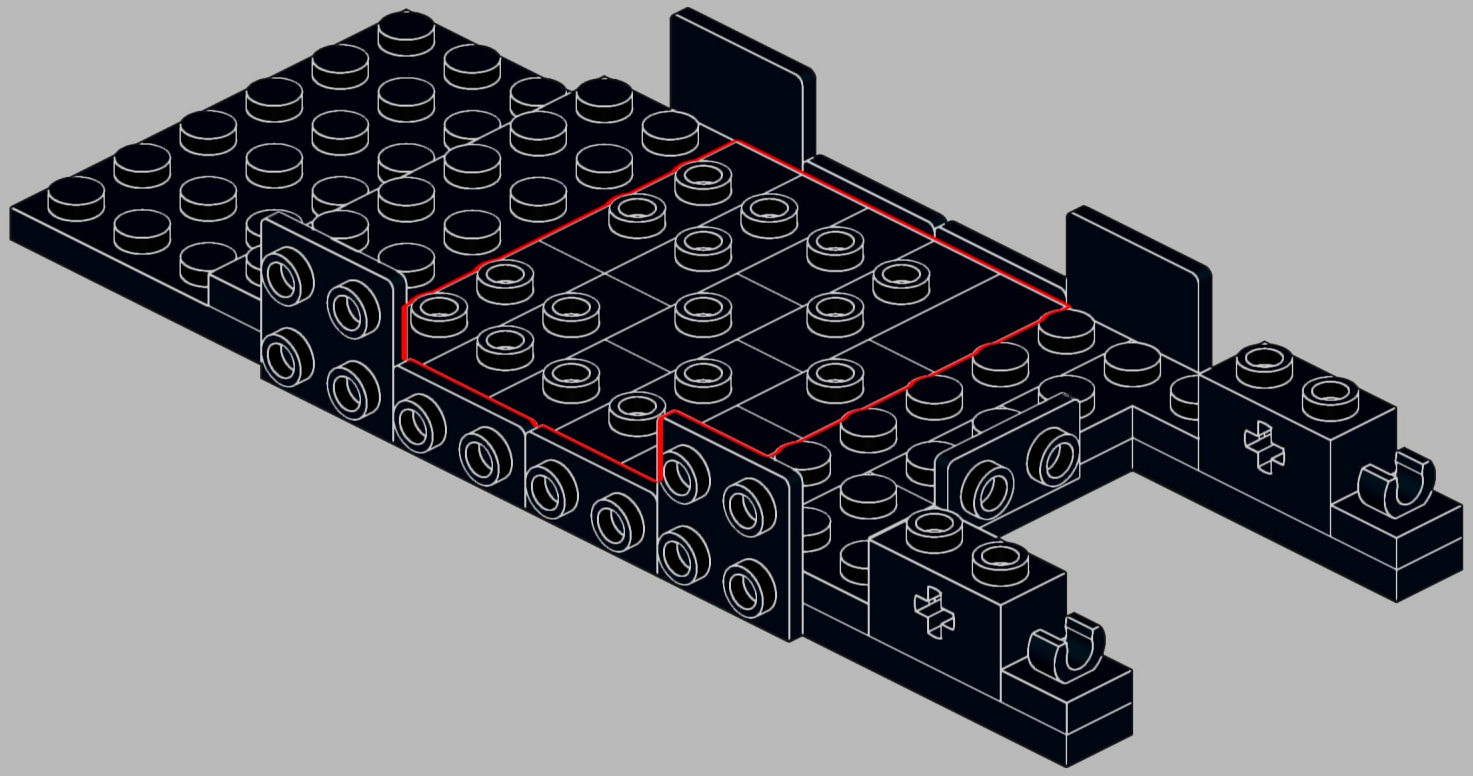

8

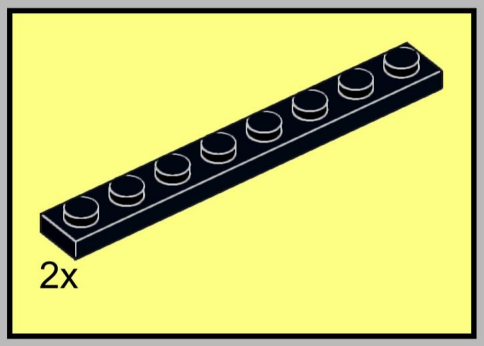

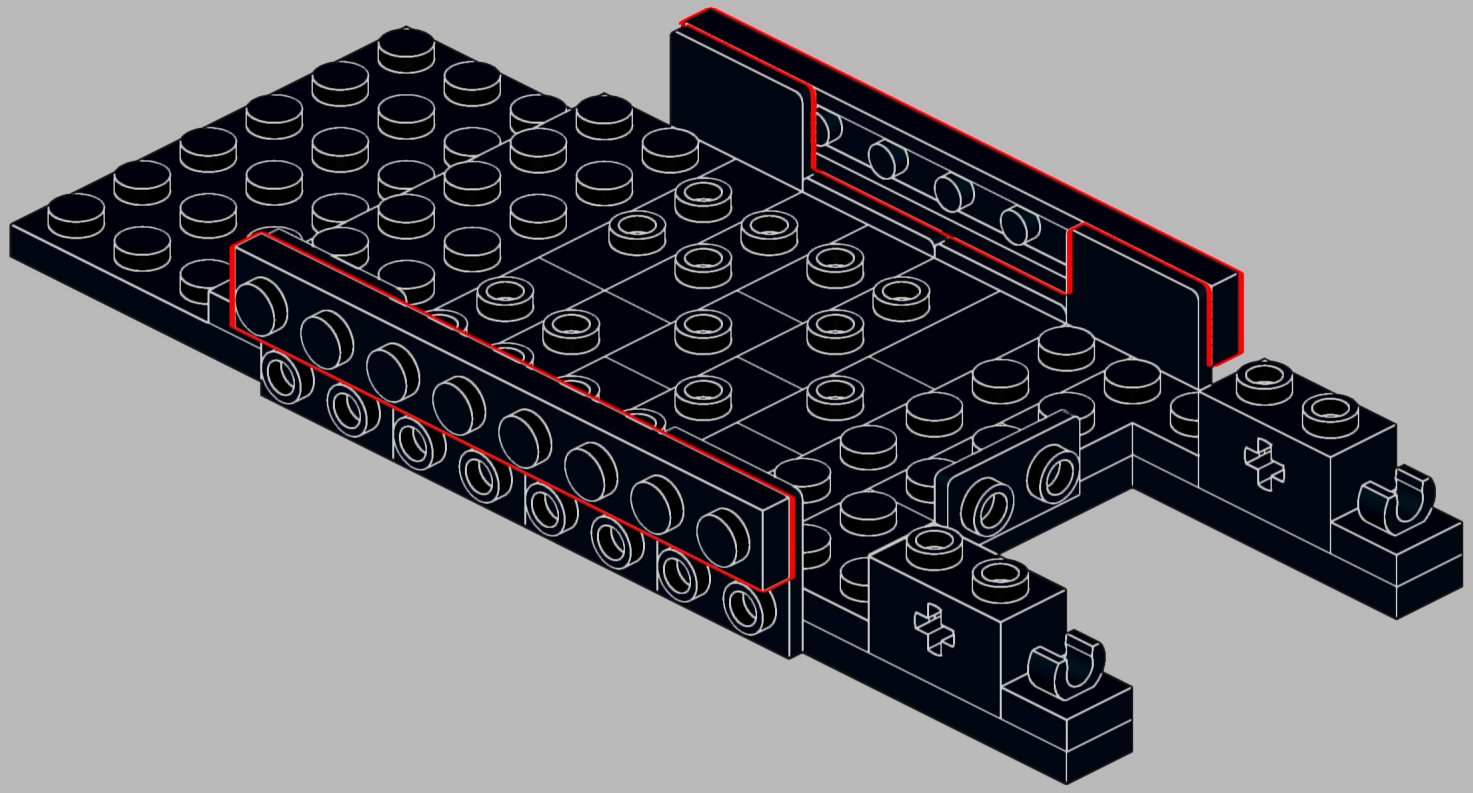

9

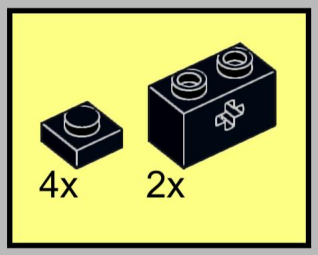

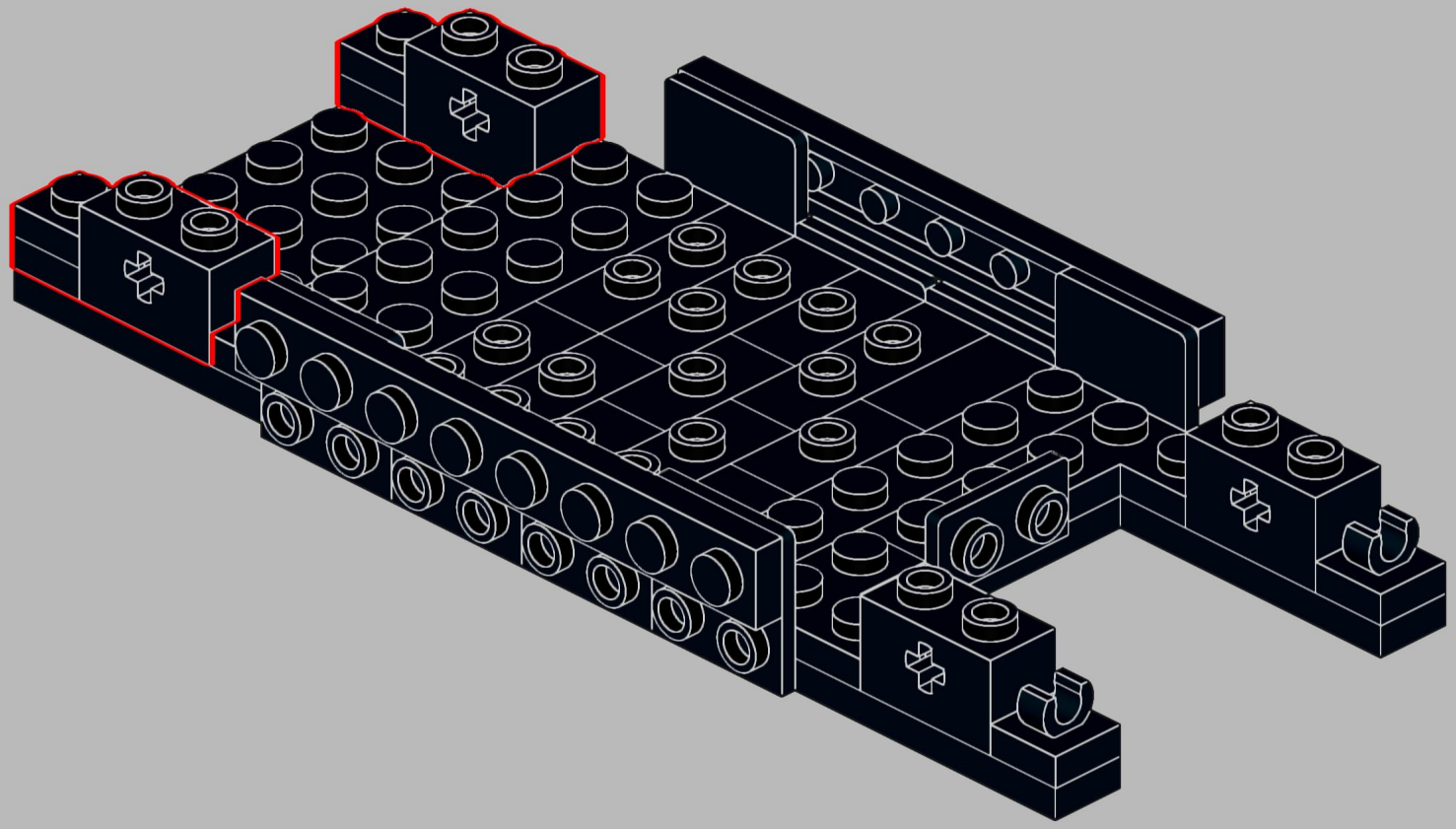

10

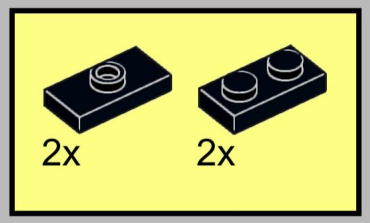

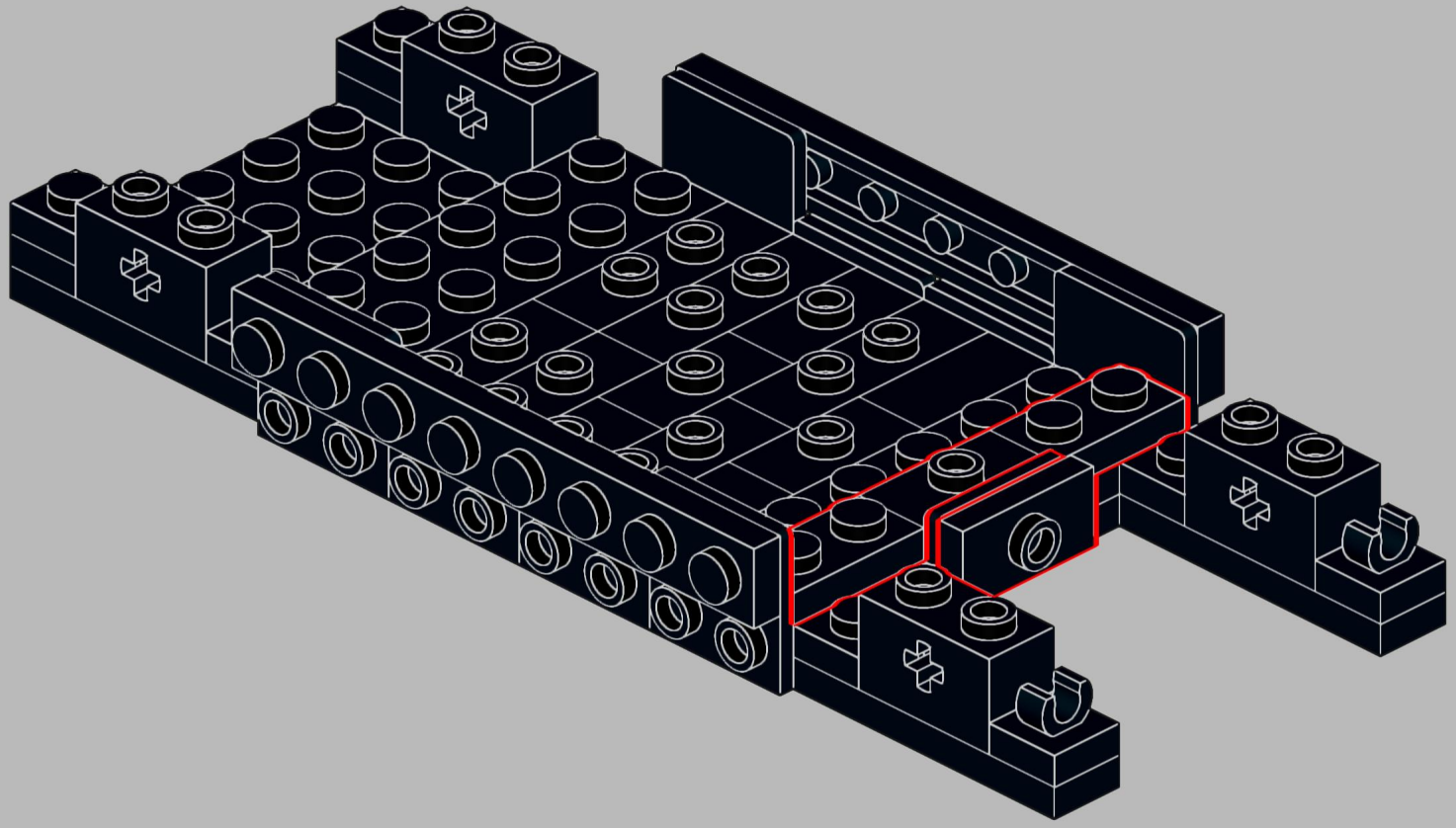

11

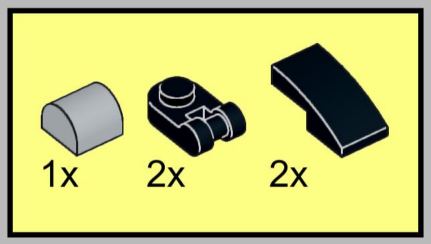

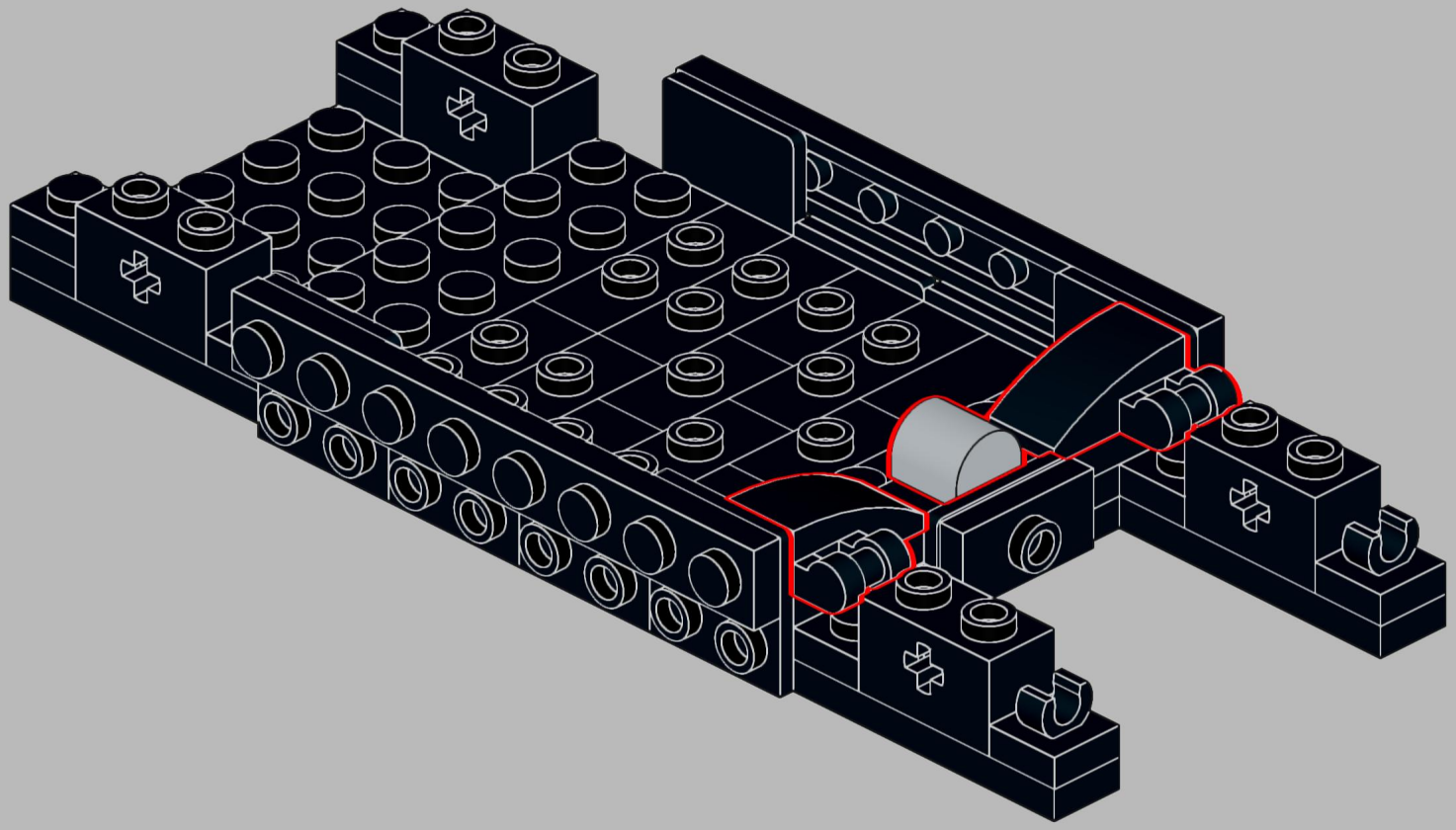

12

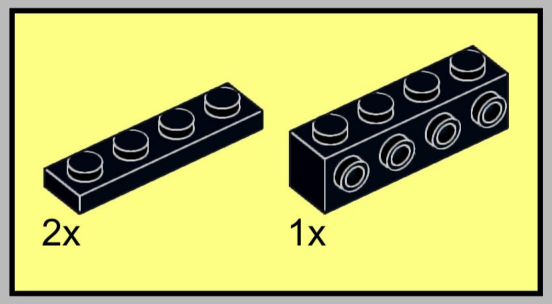

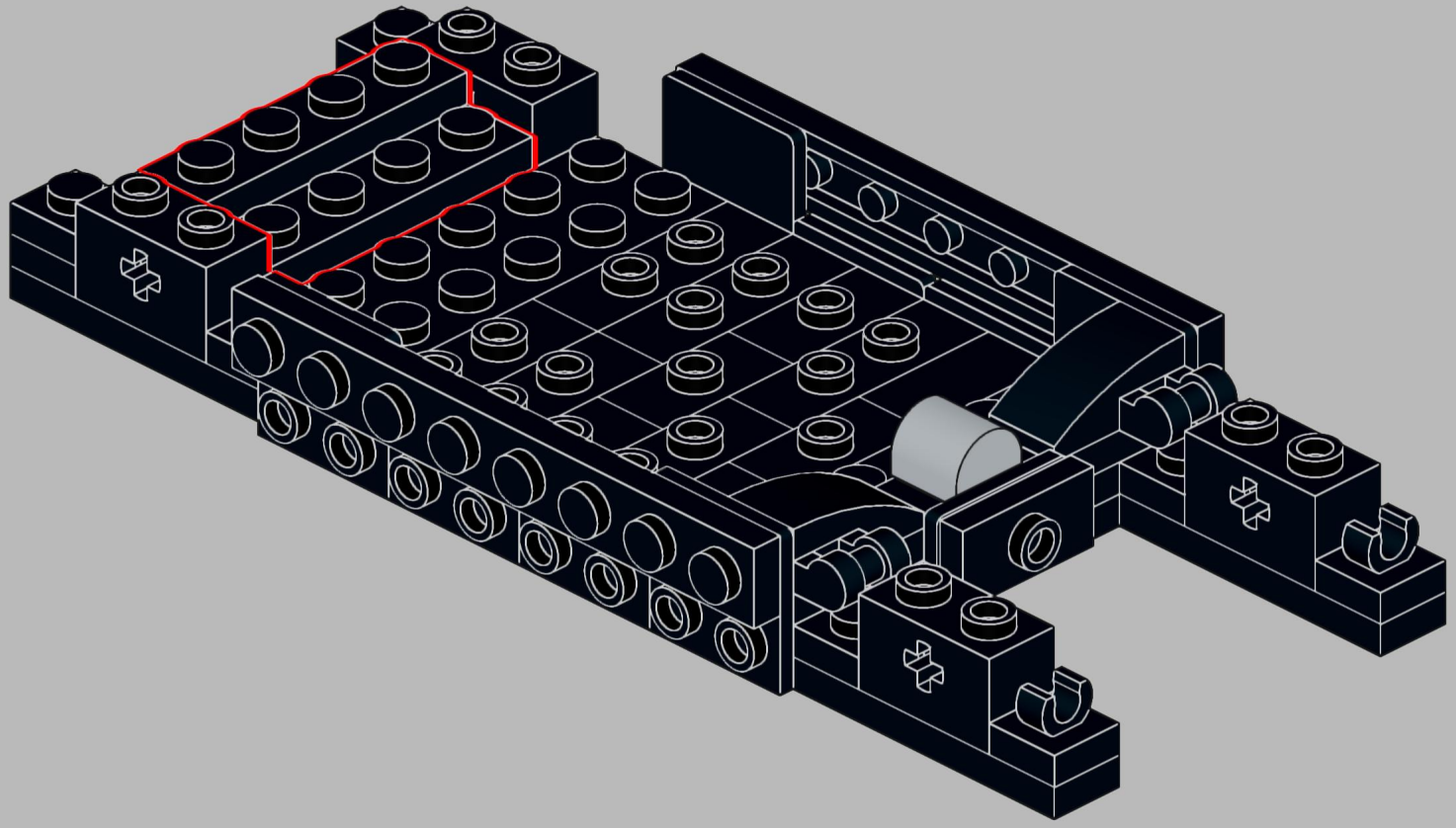

13

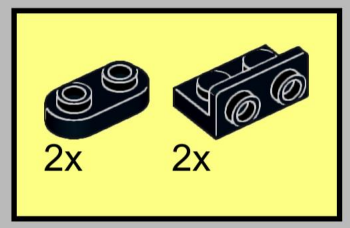

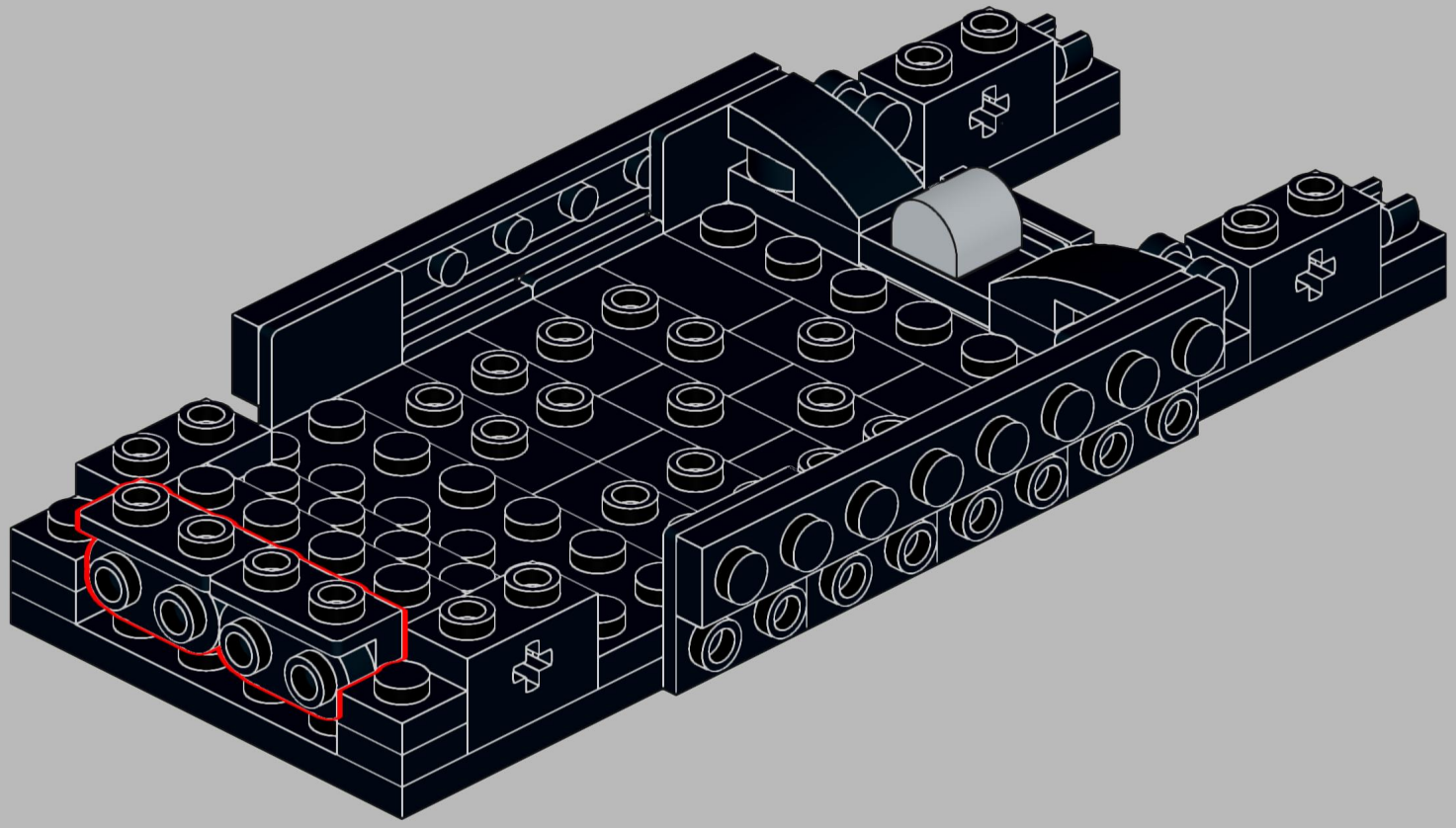

14

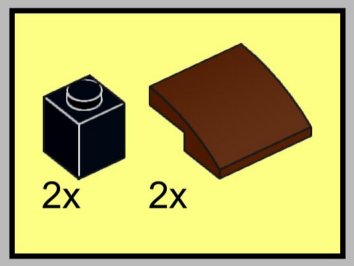

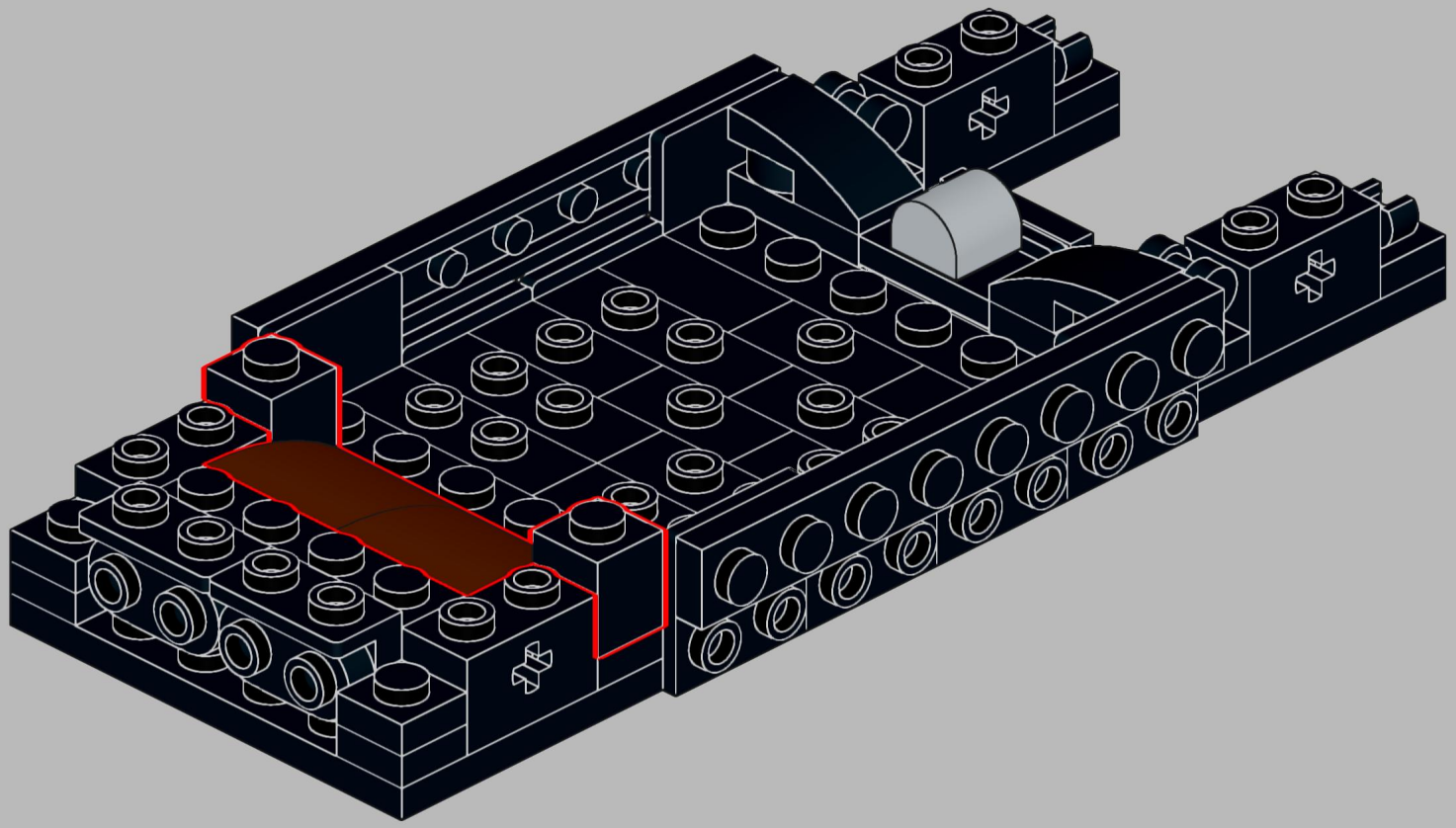

15

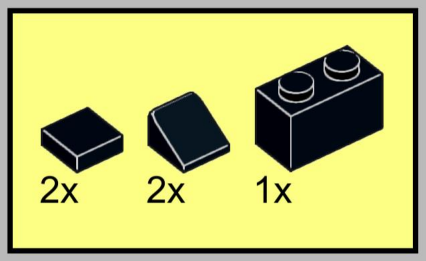

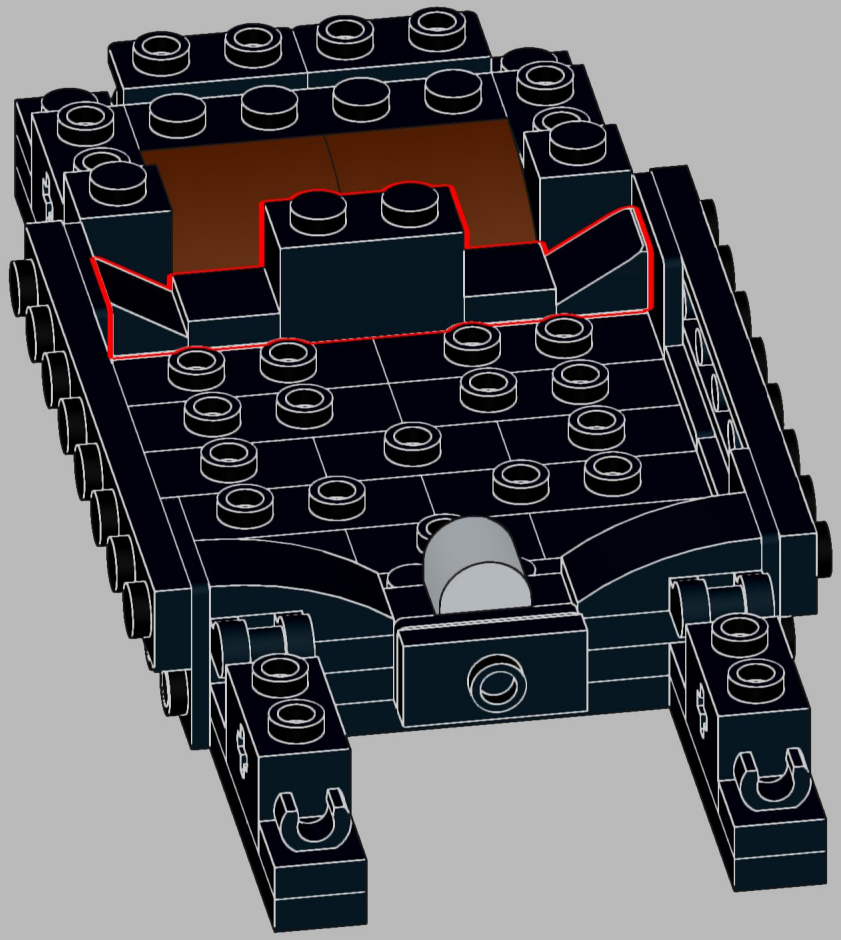

16

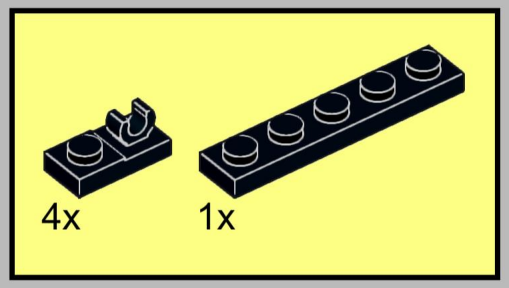

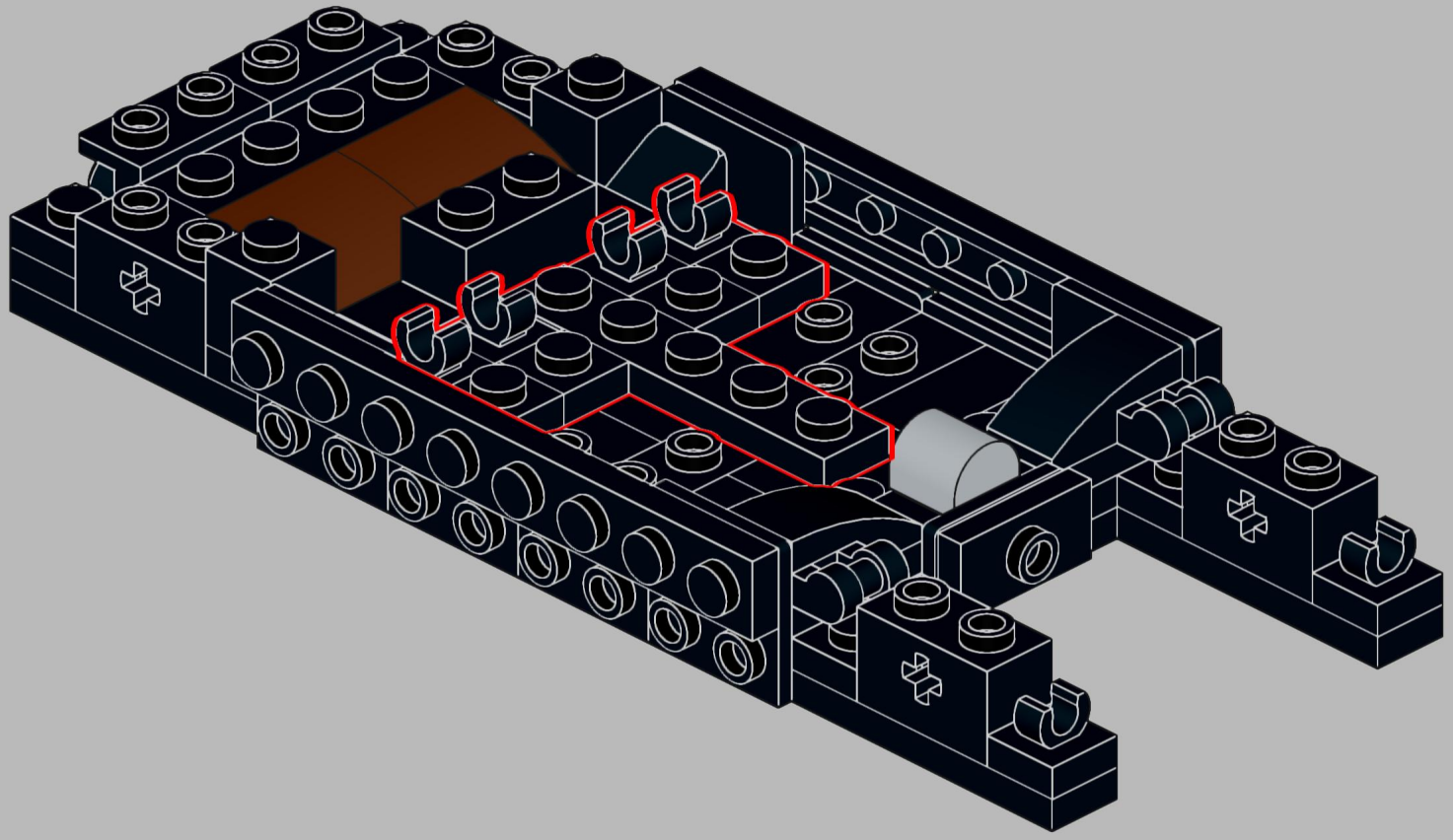

17

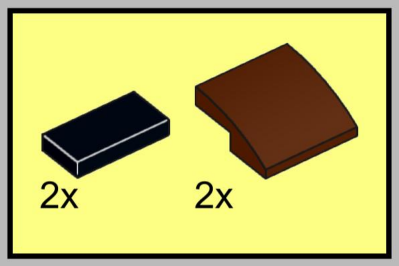

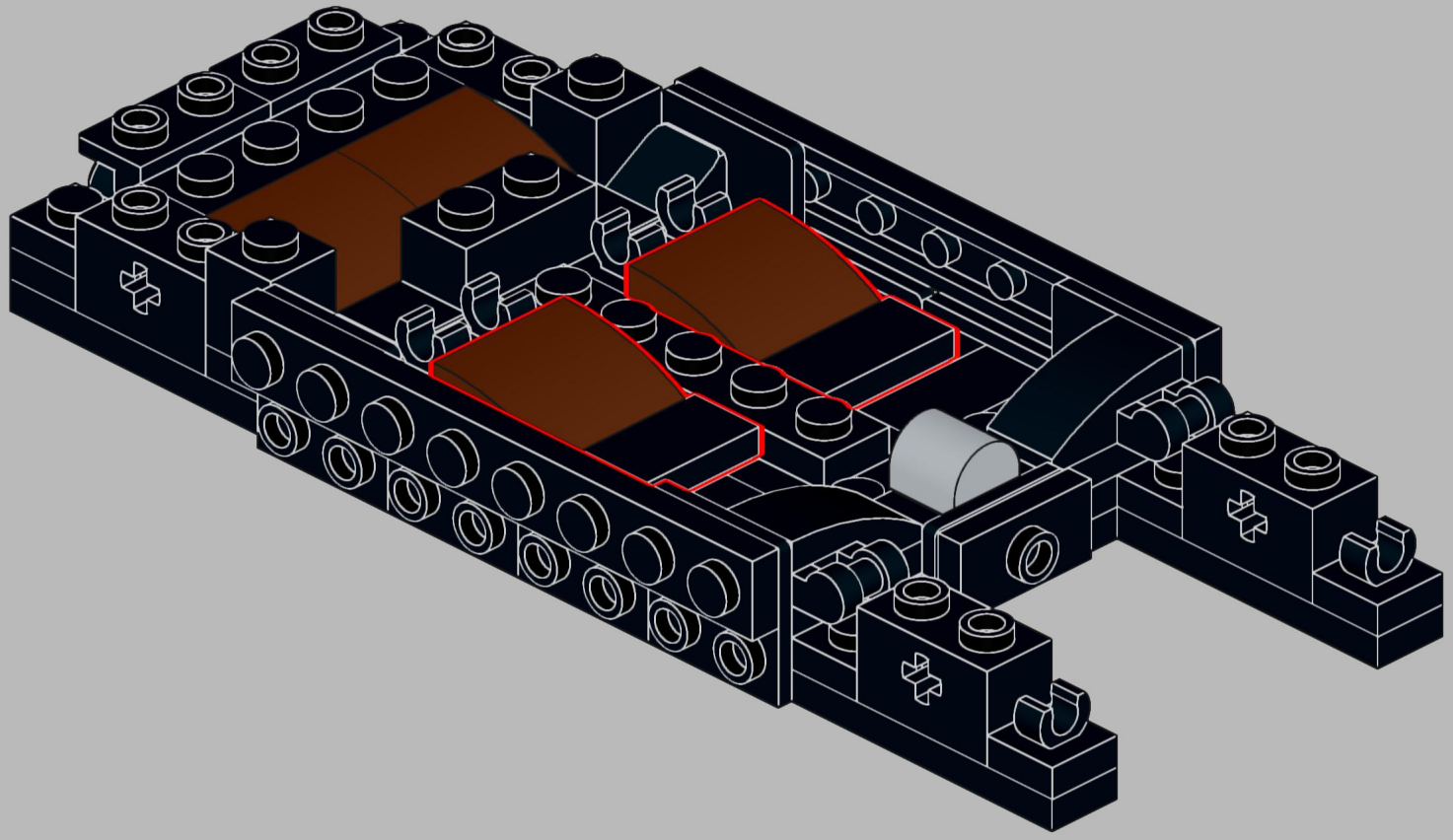

18

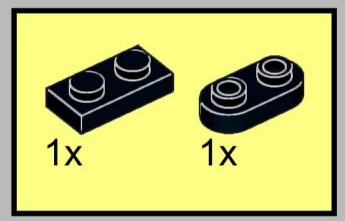

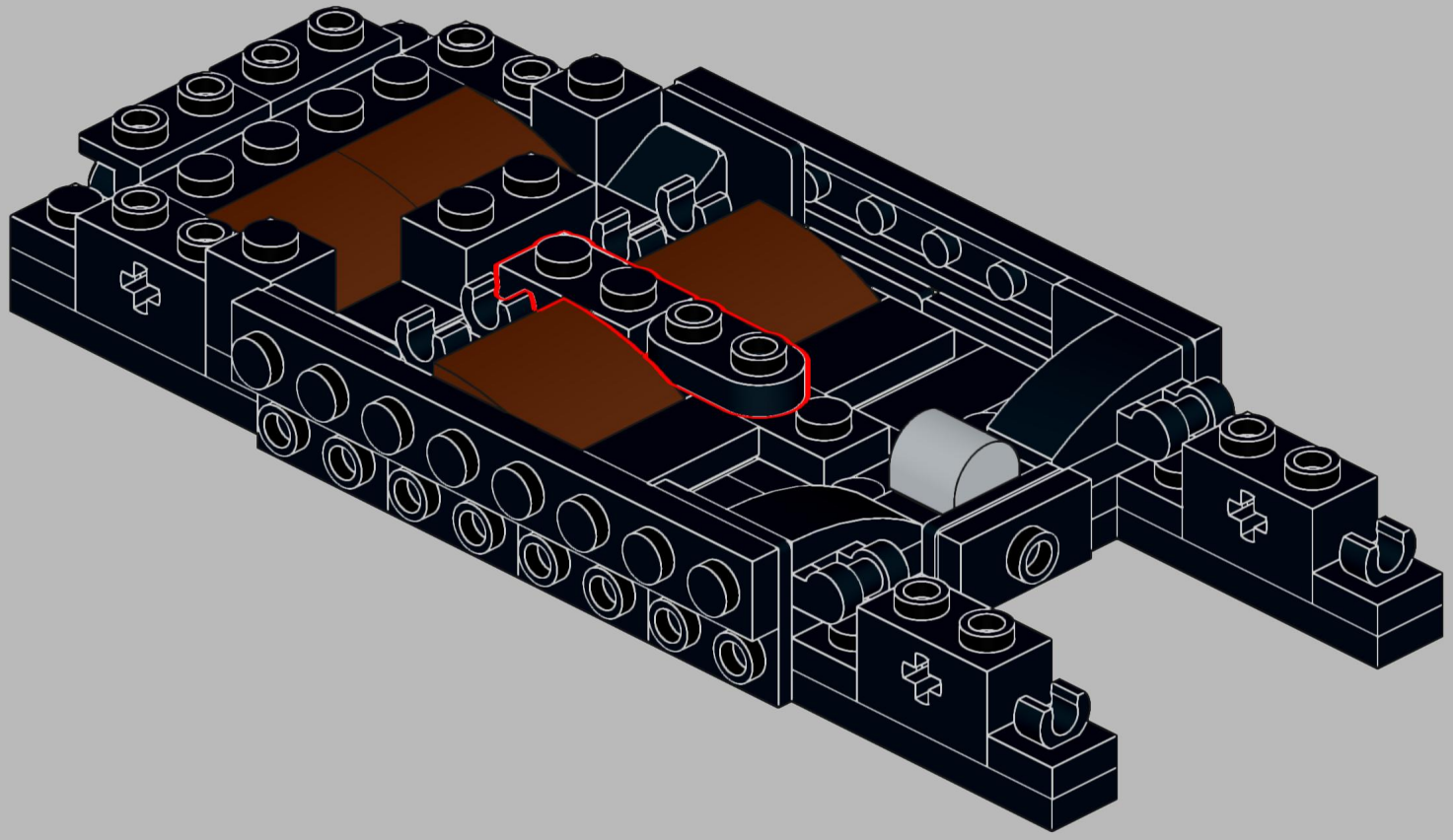

19

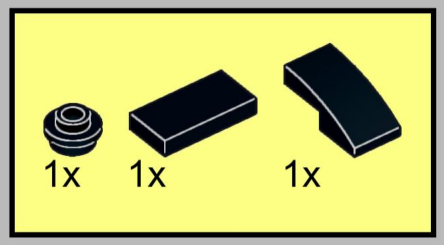

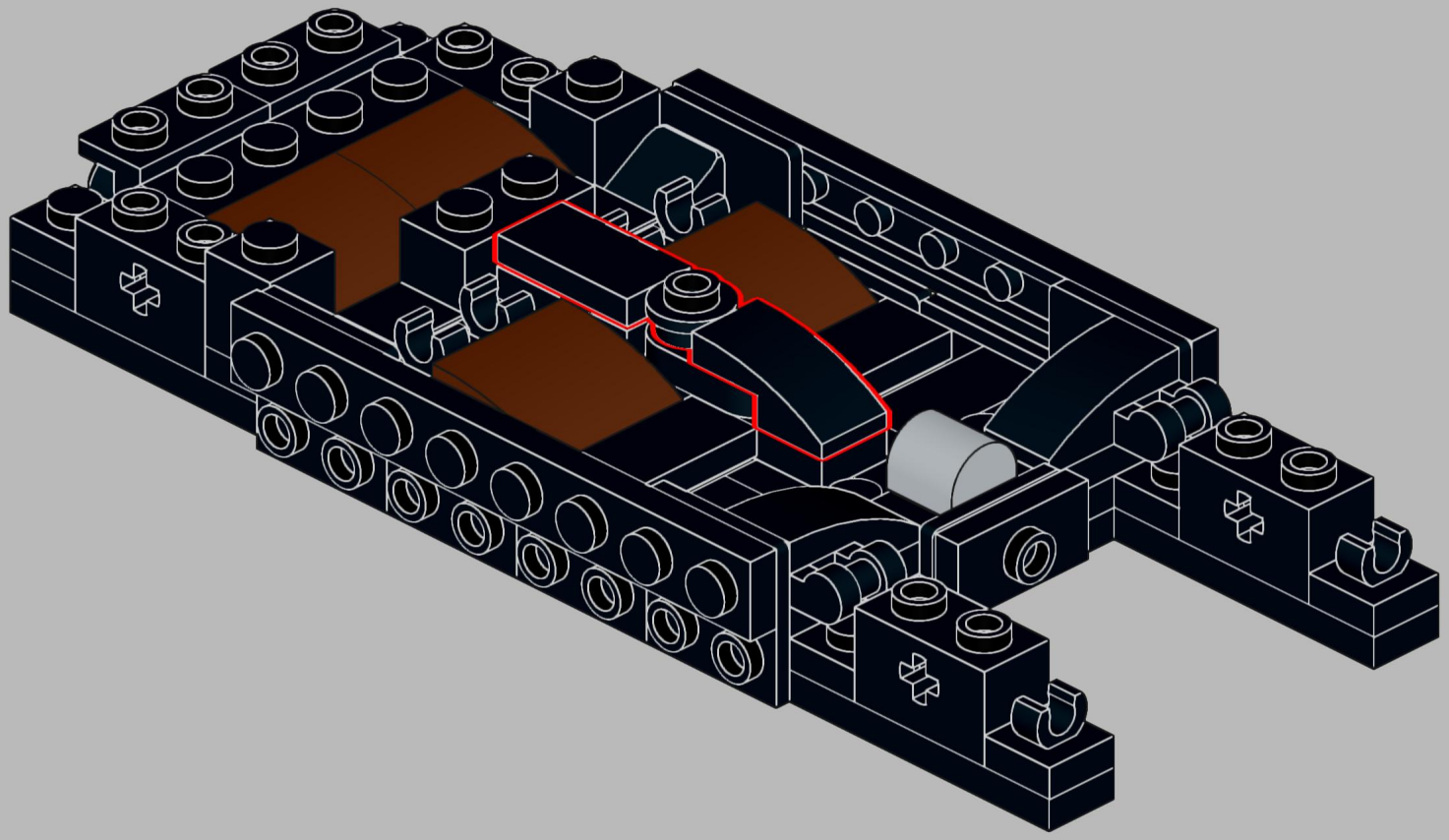

20

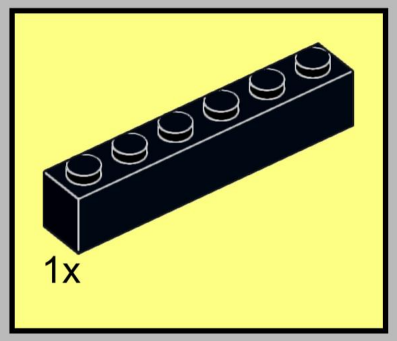

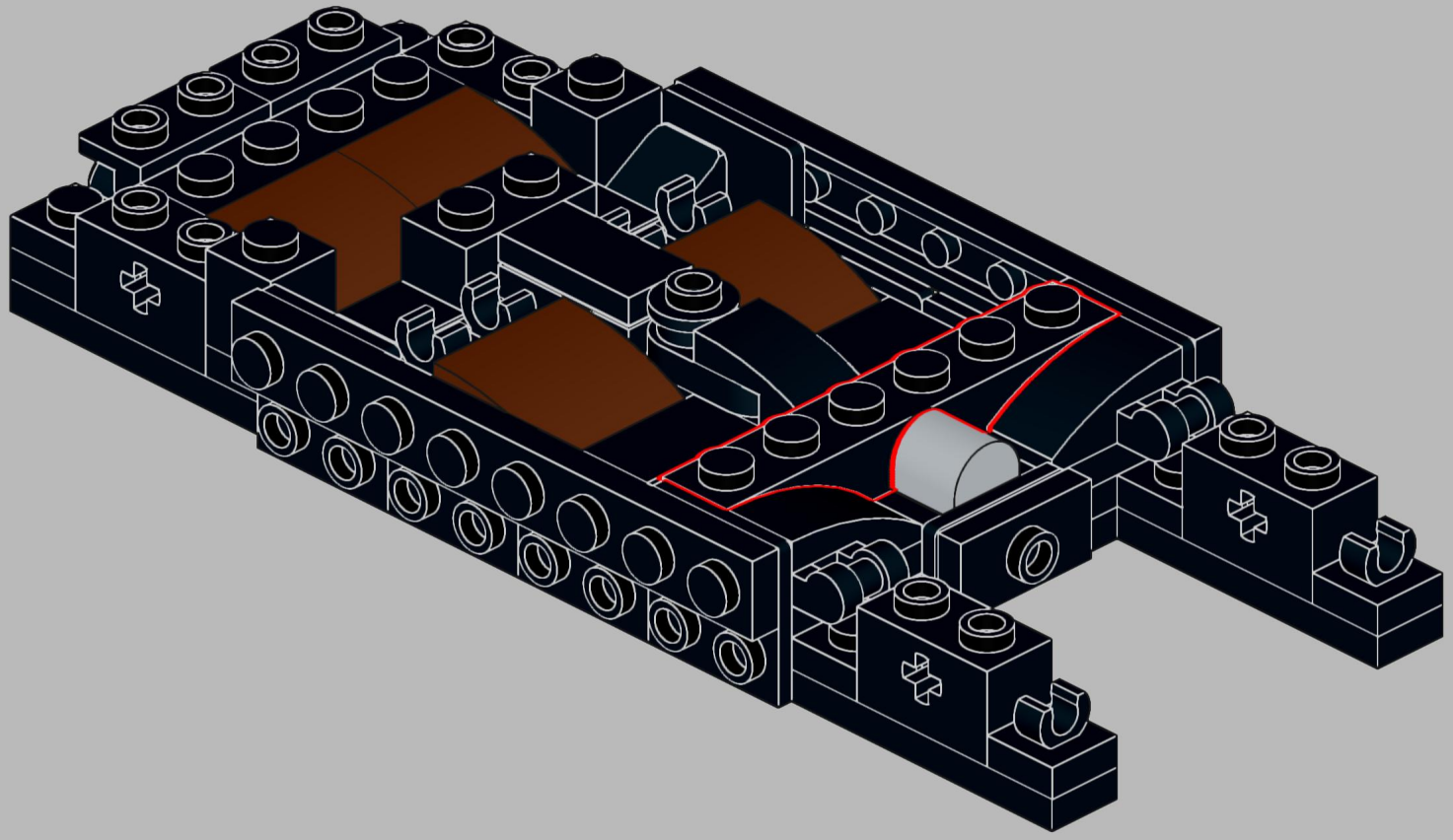

21

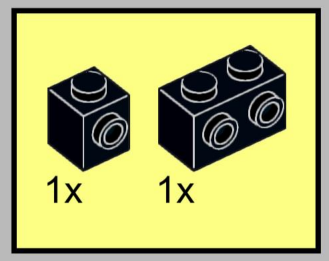

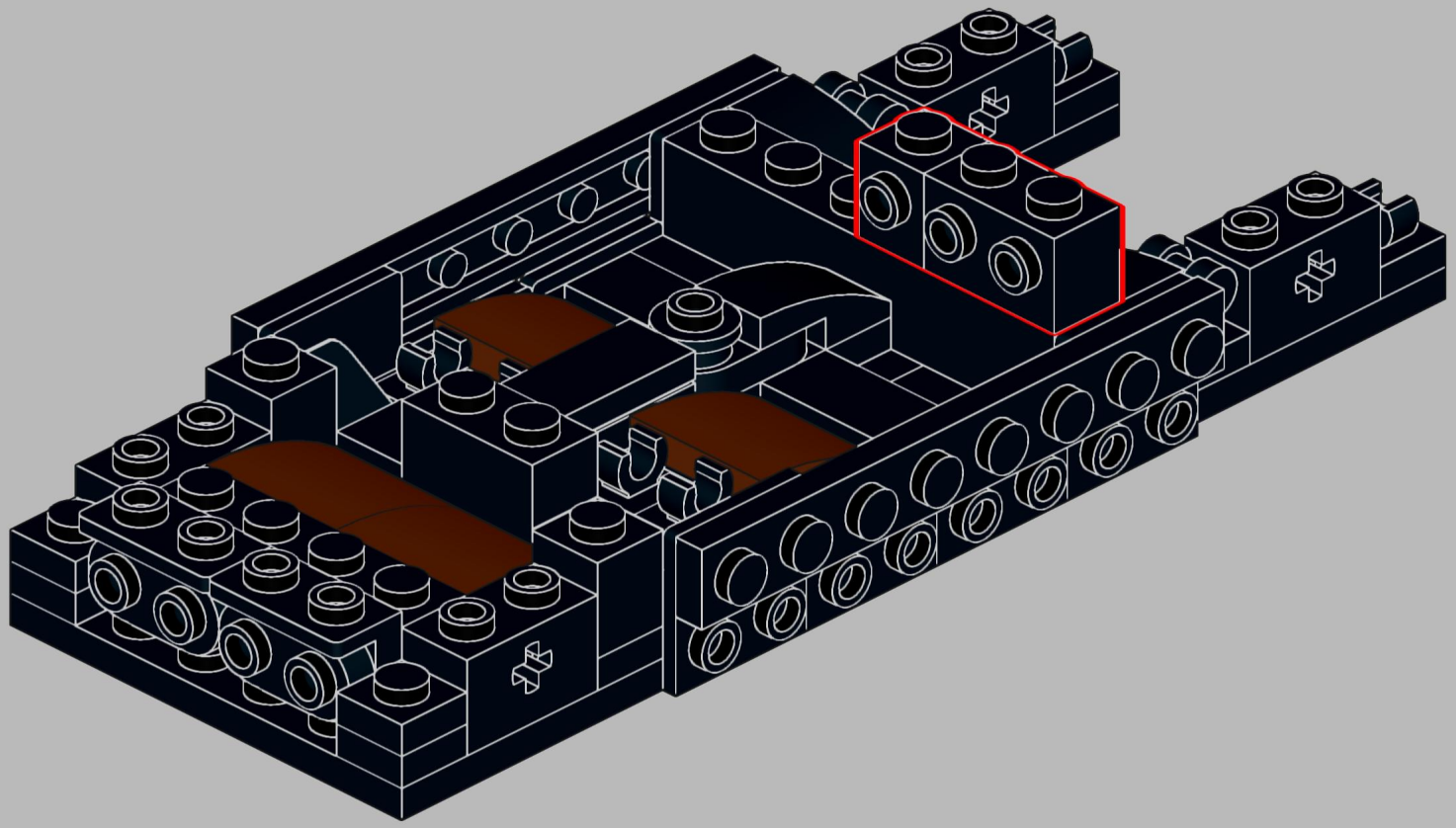

22

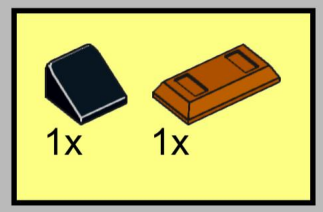

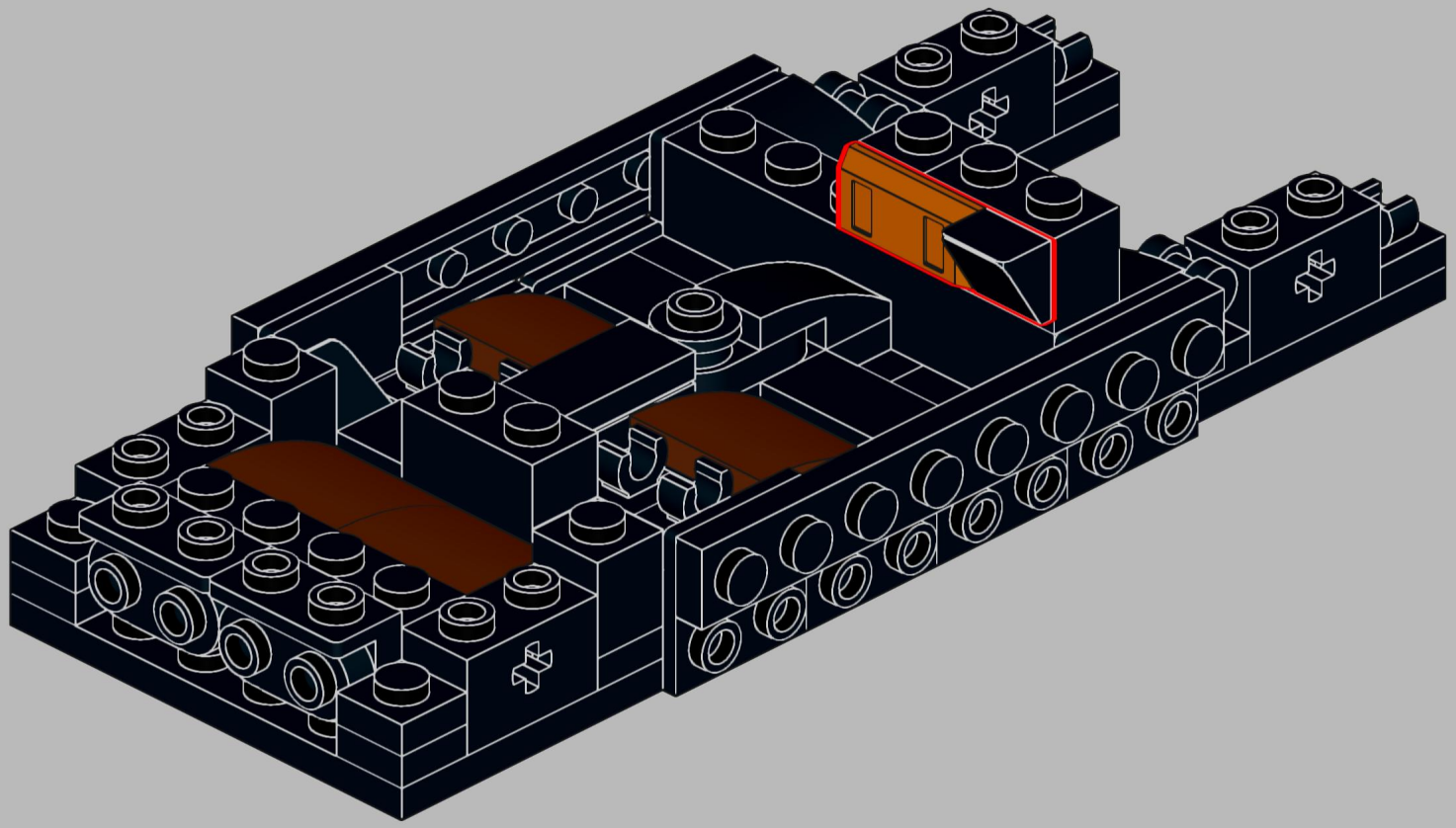

23

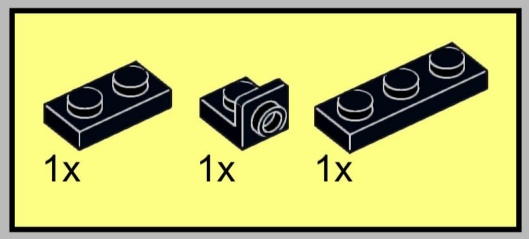

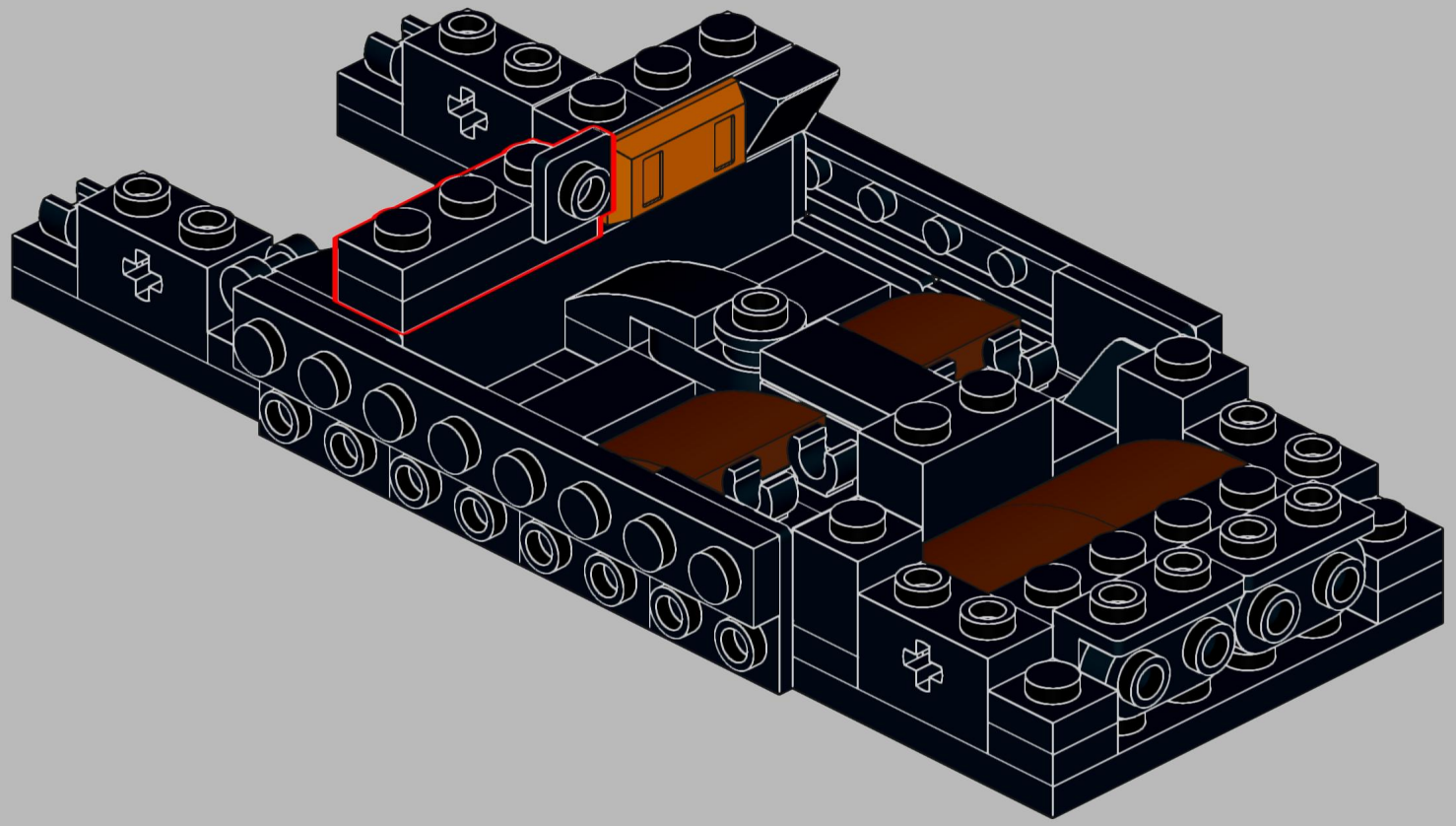

24

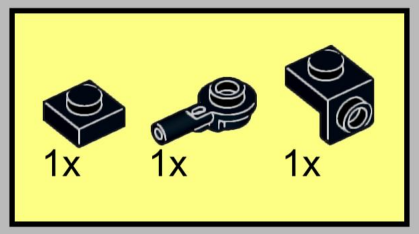

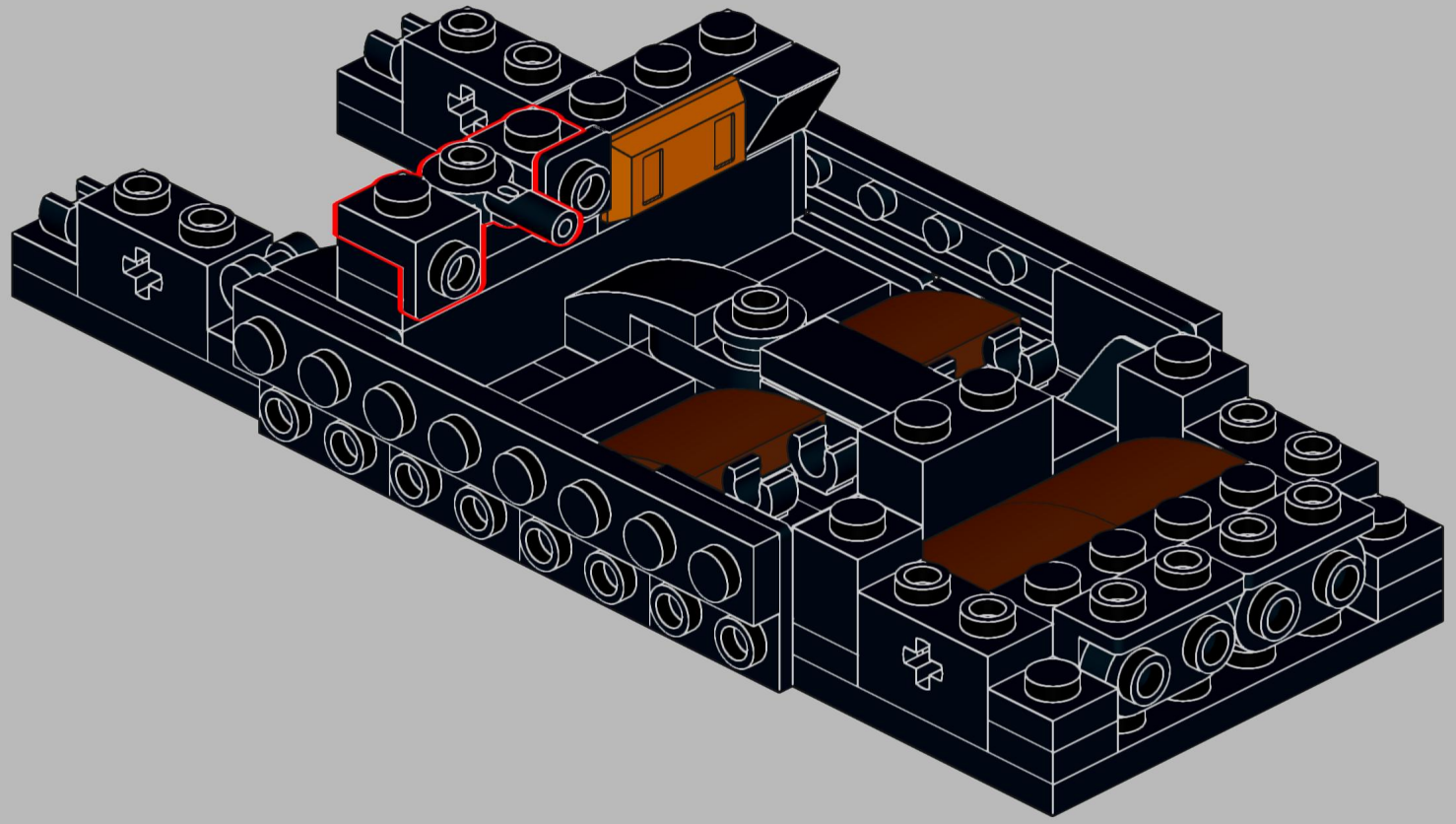

25

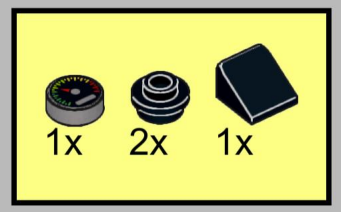

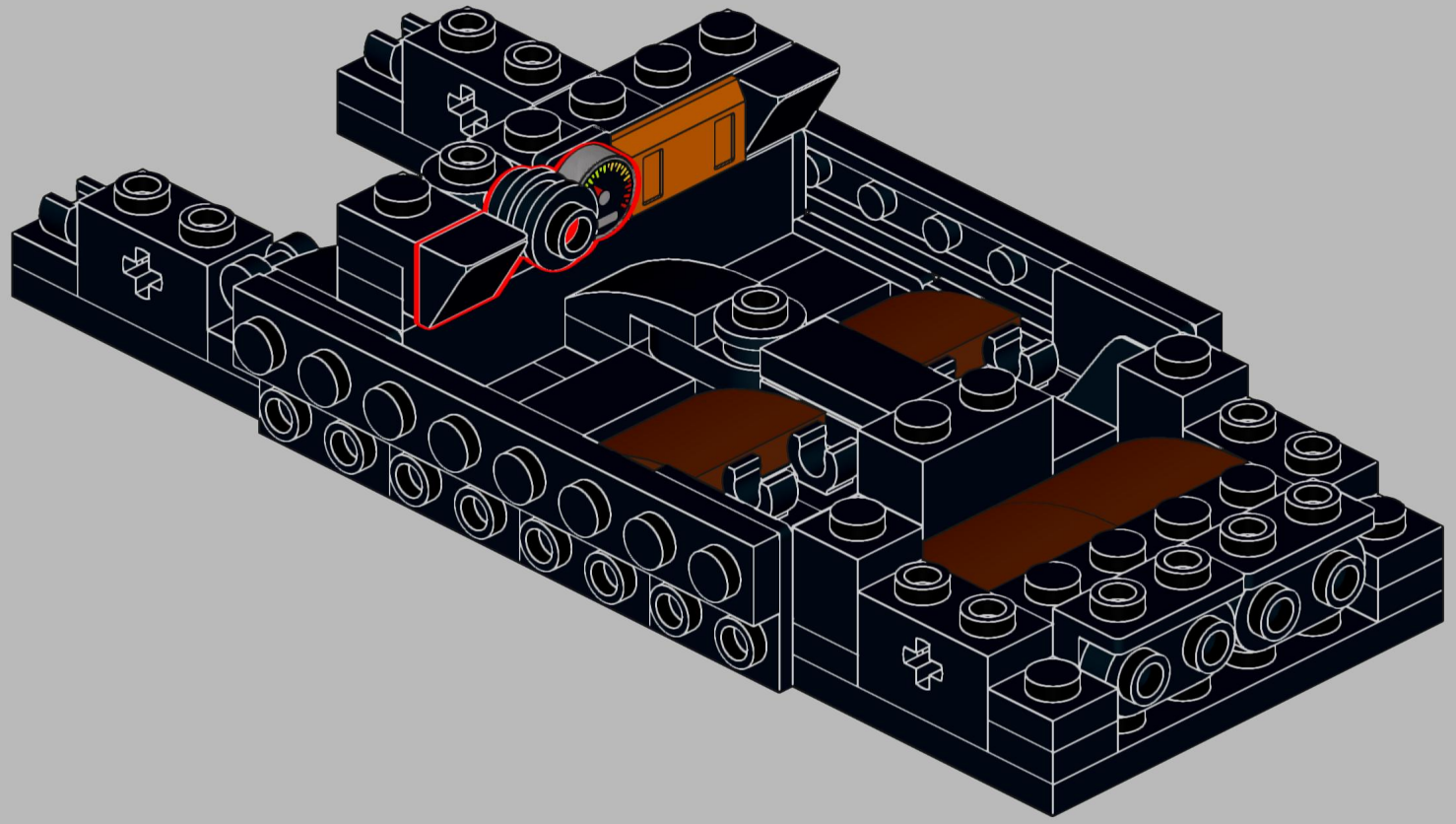

26



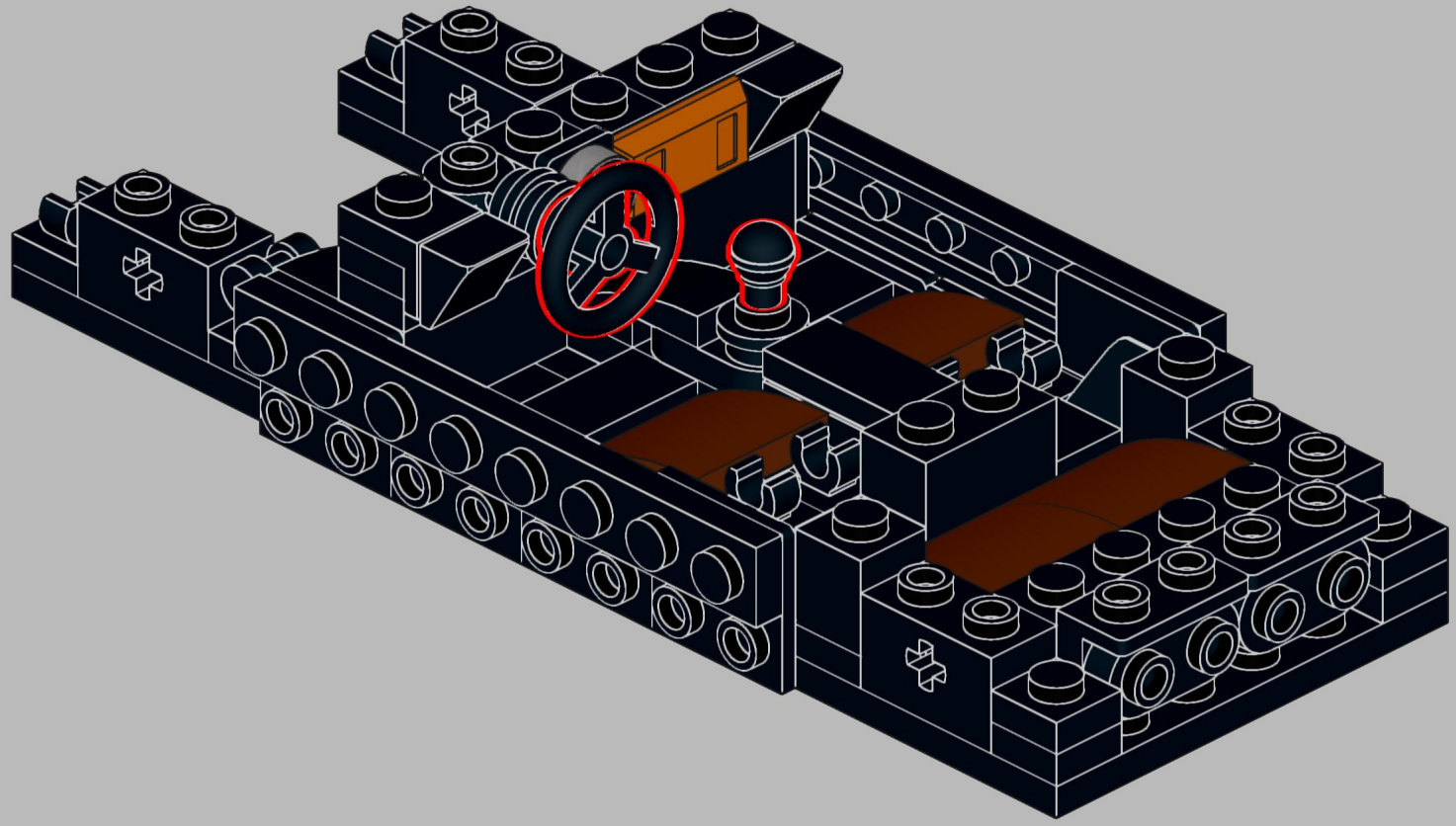

27

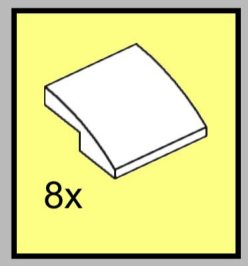

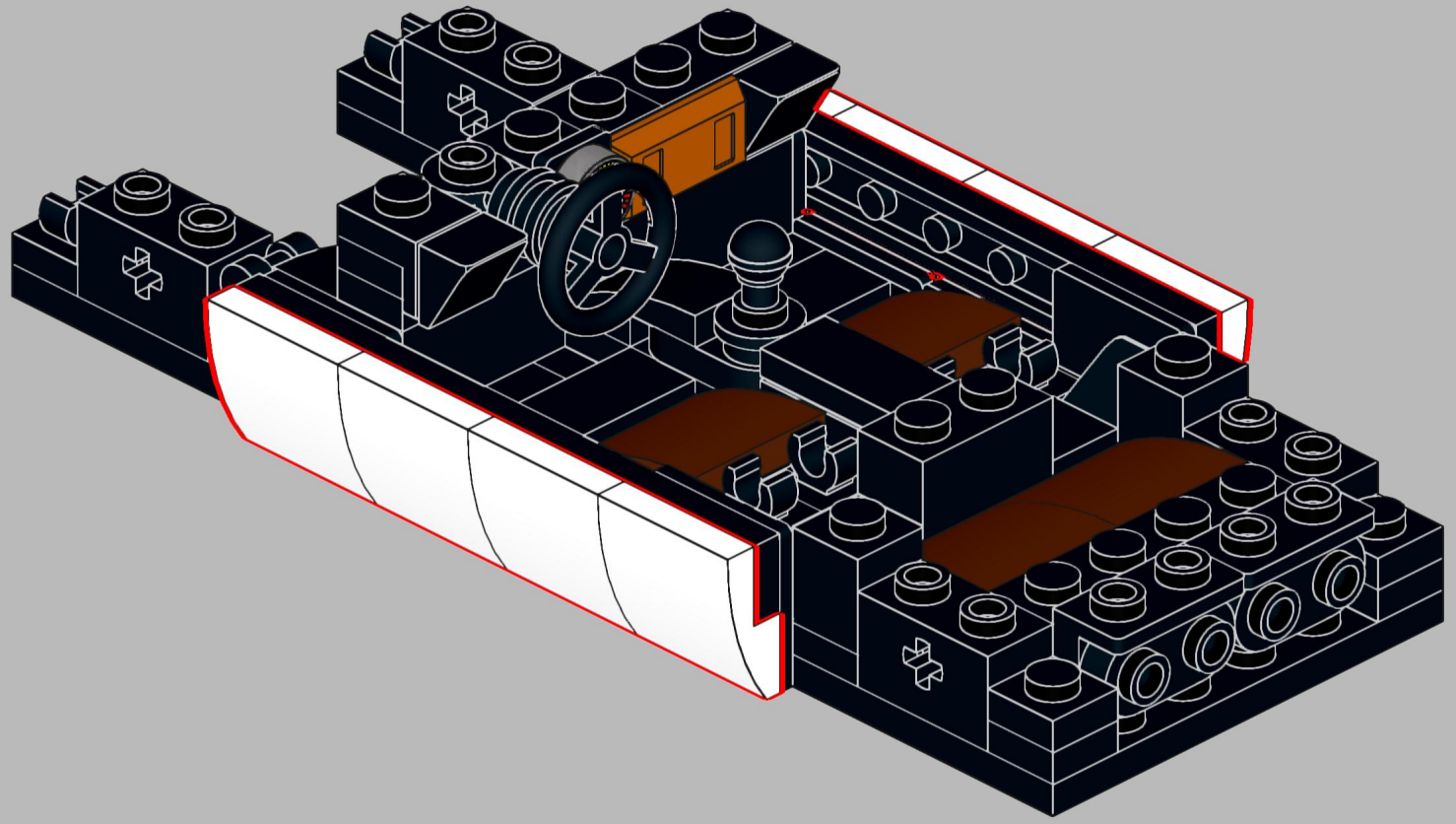

28

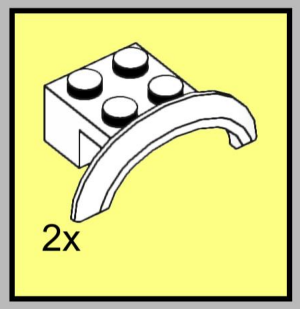

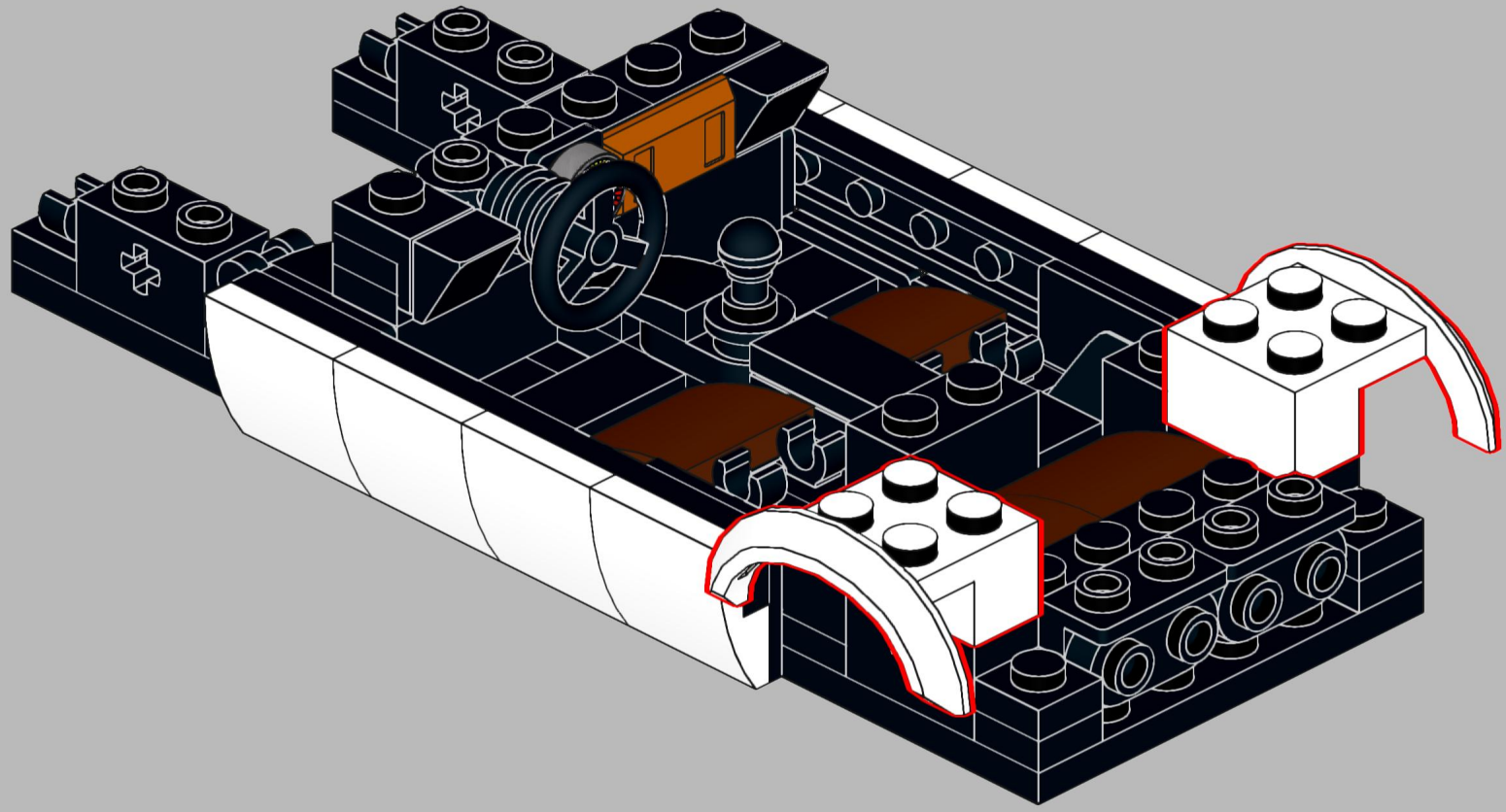

29

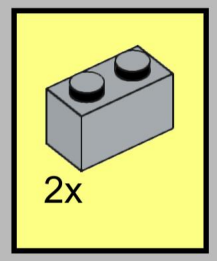

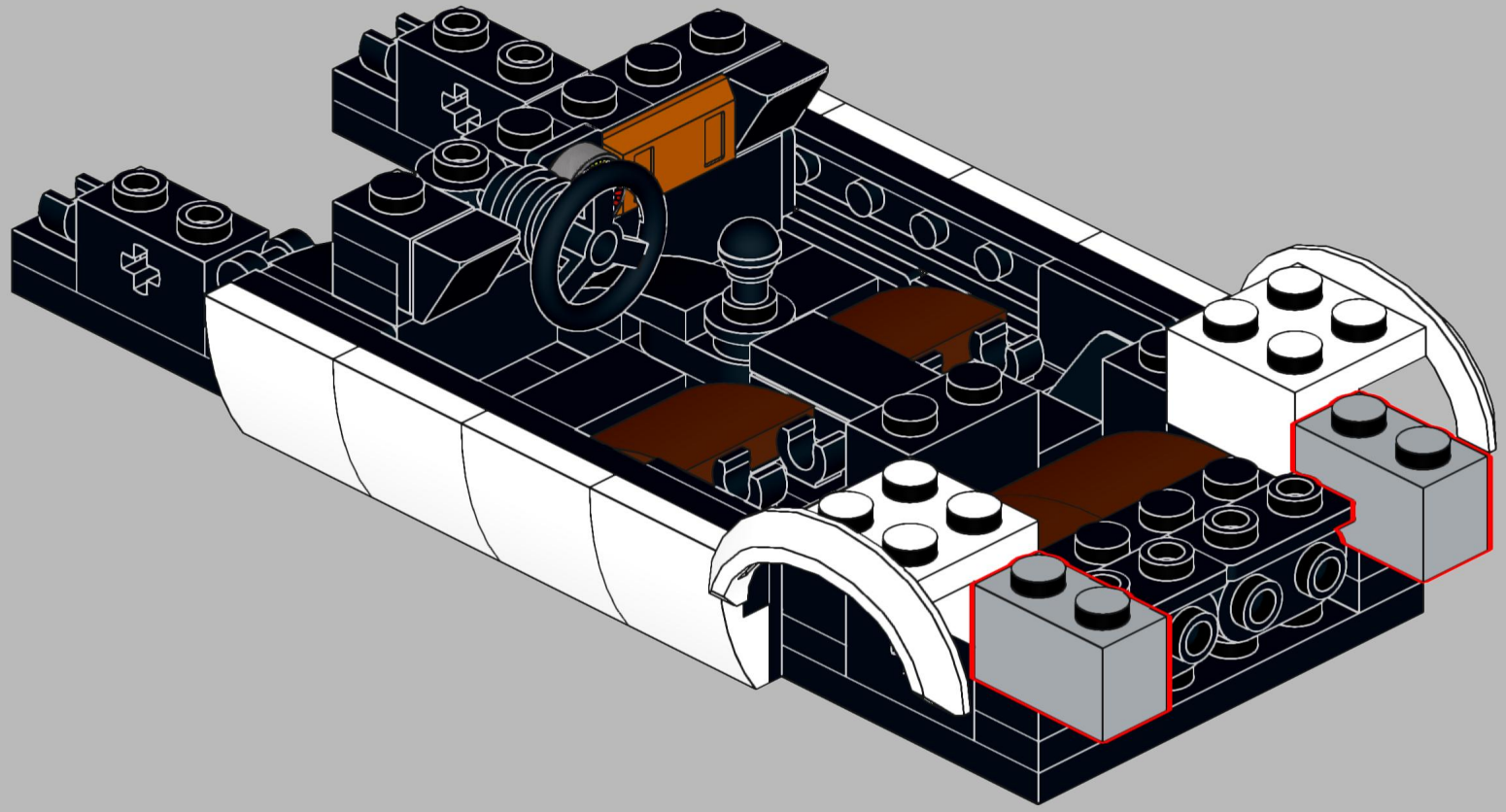

30

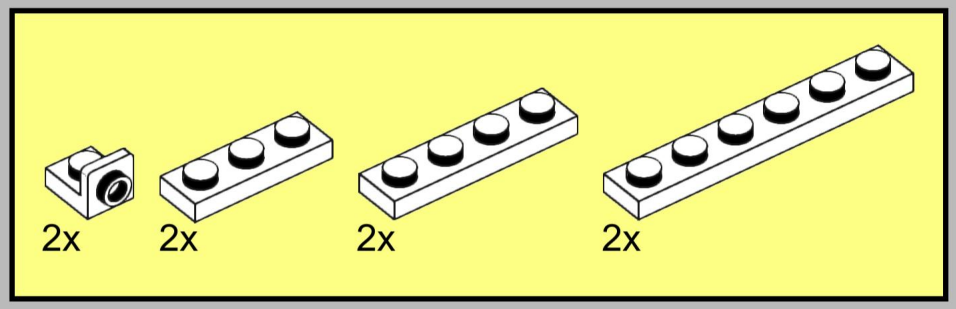

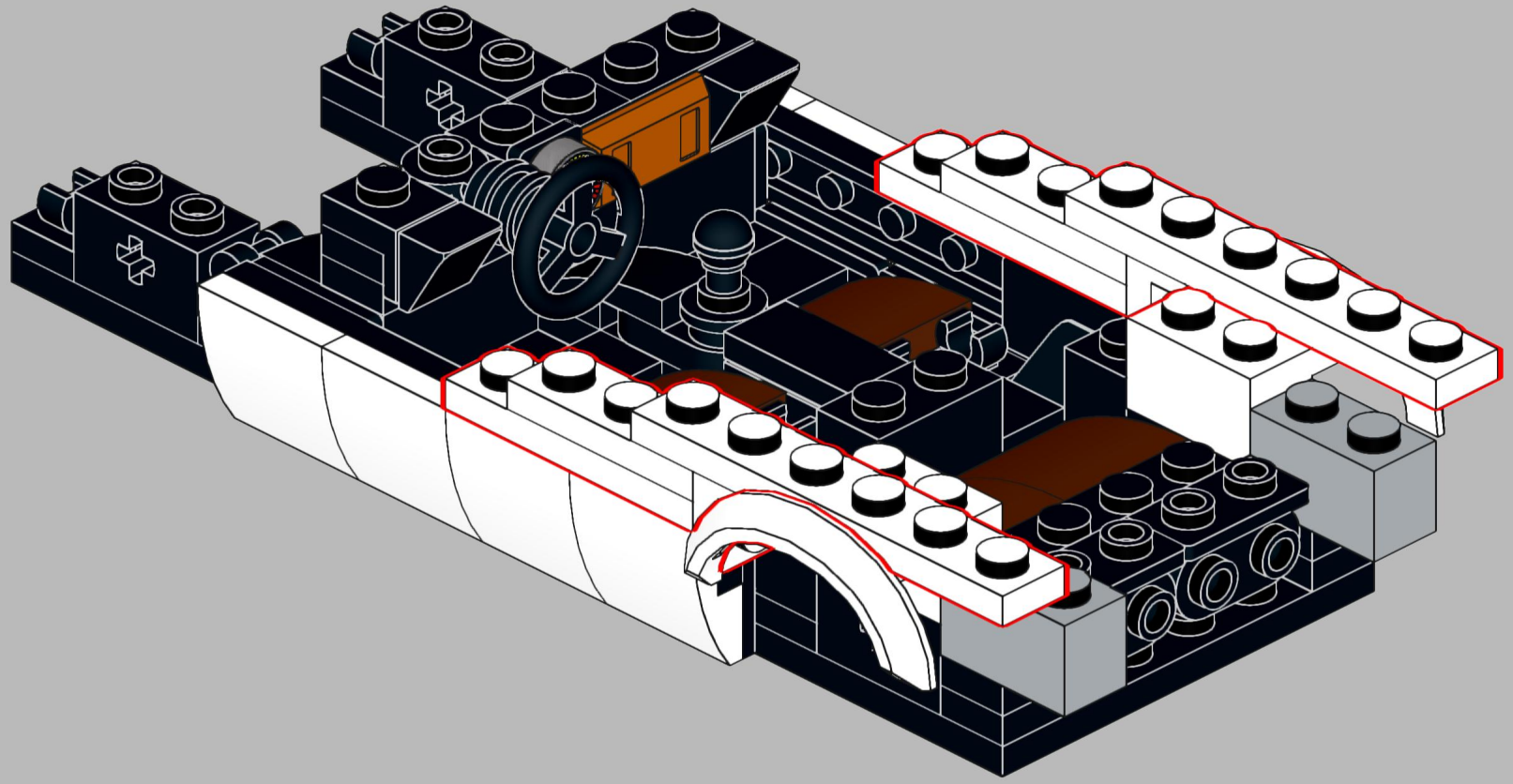

31

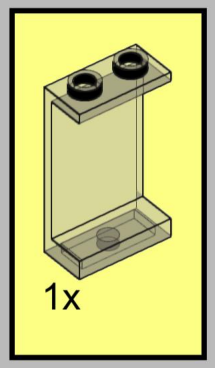

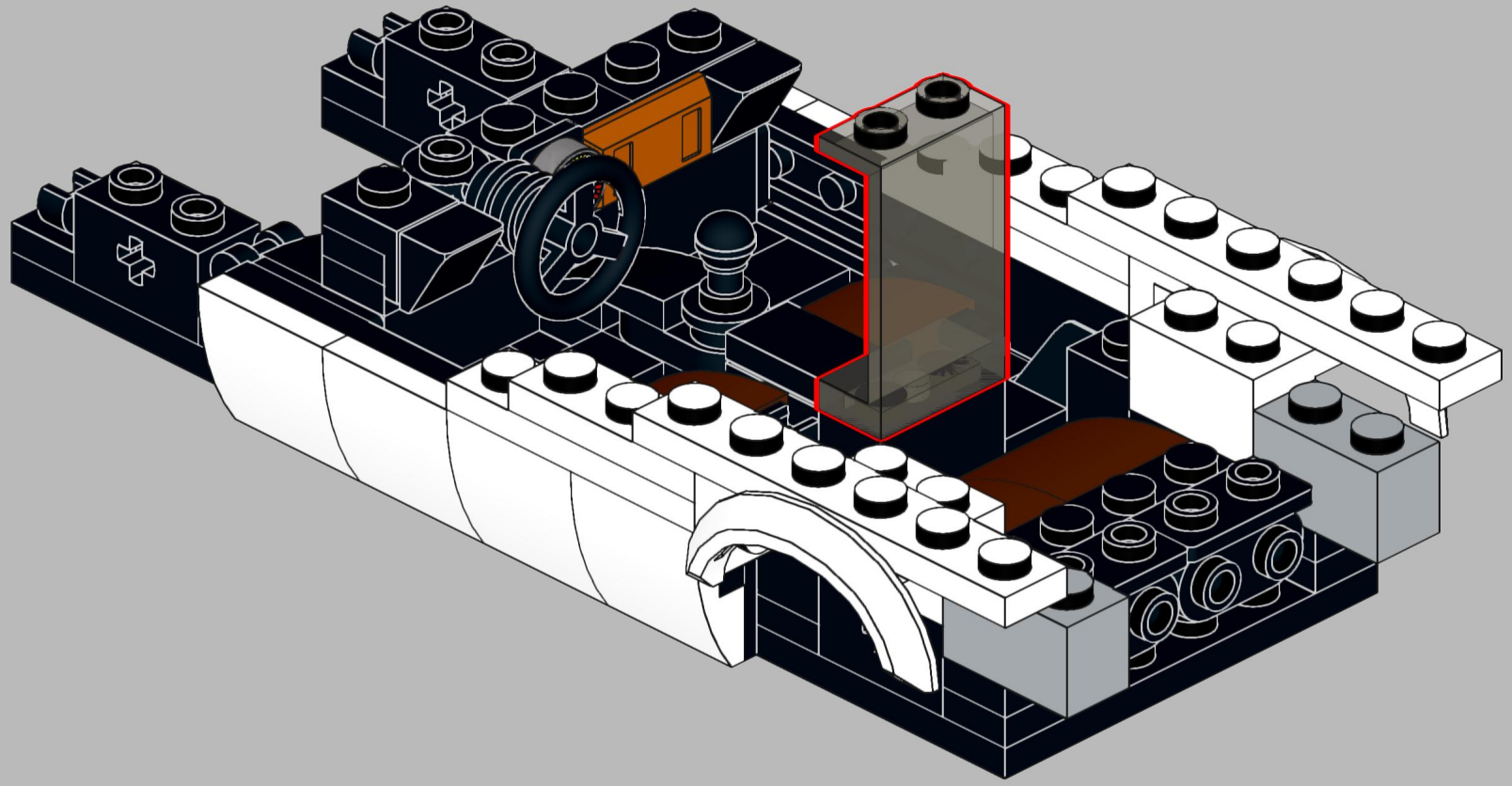

32

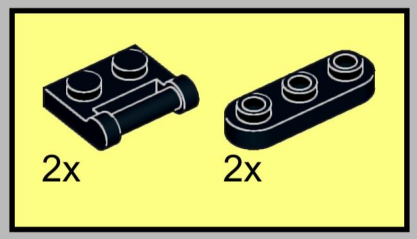

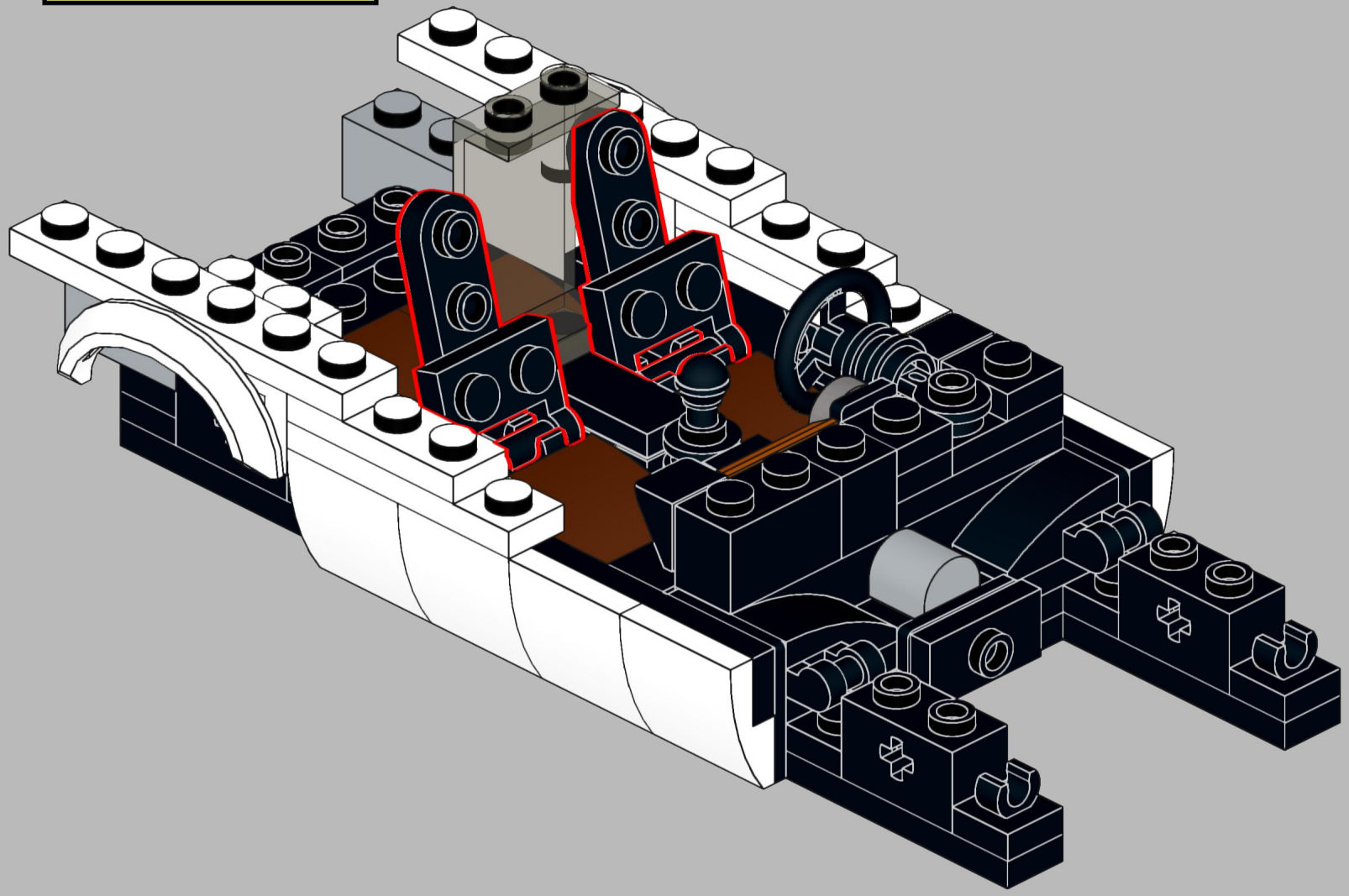

33

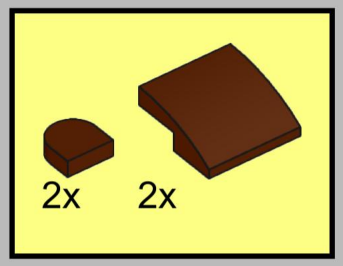

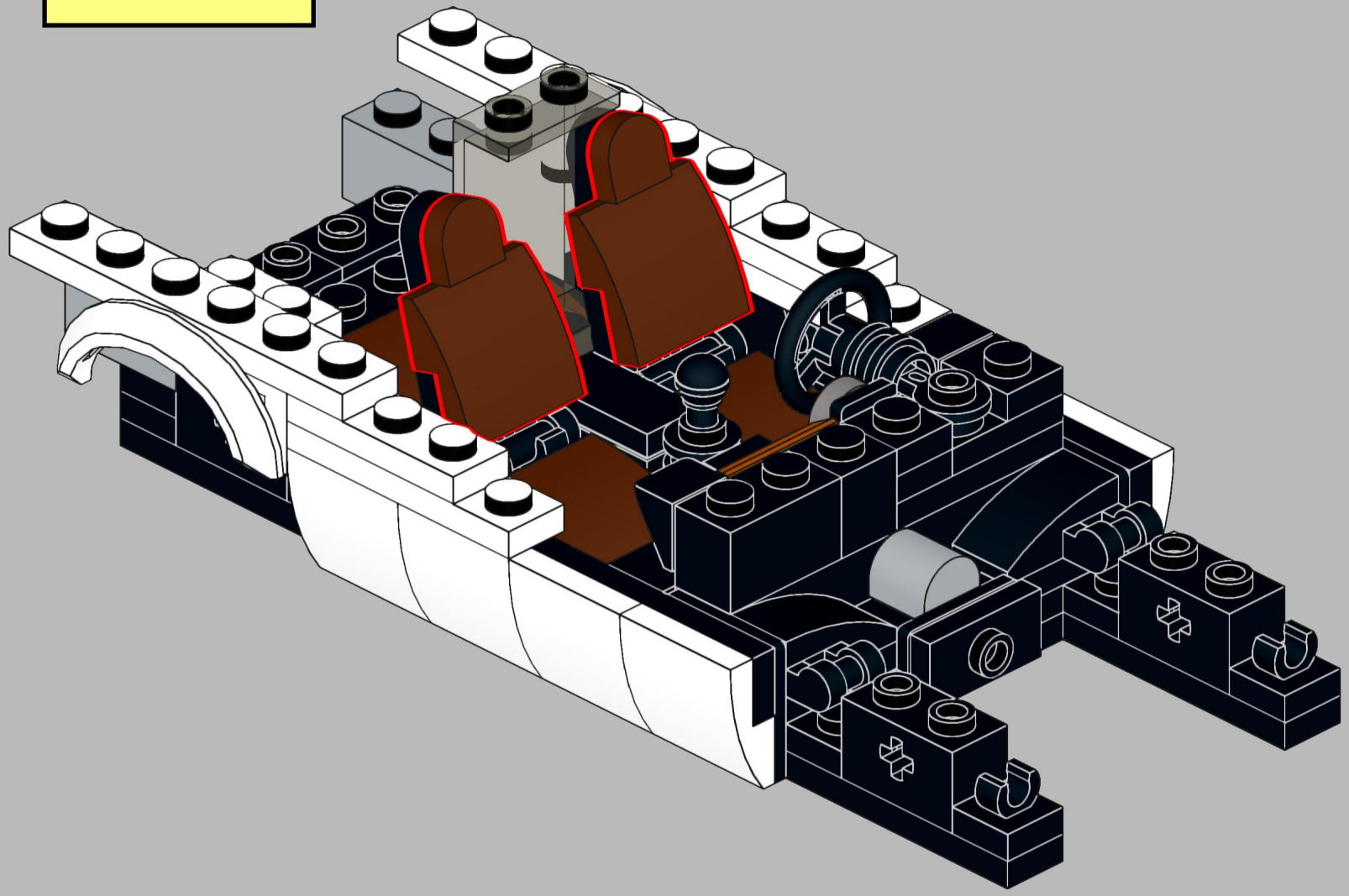

34

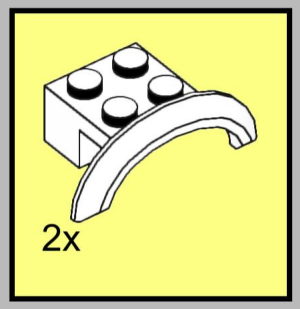

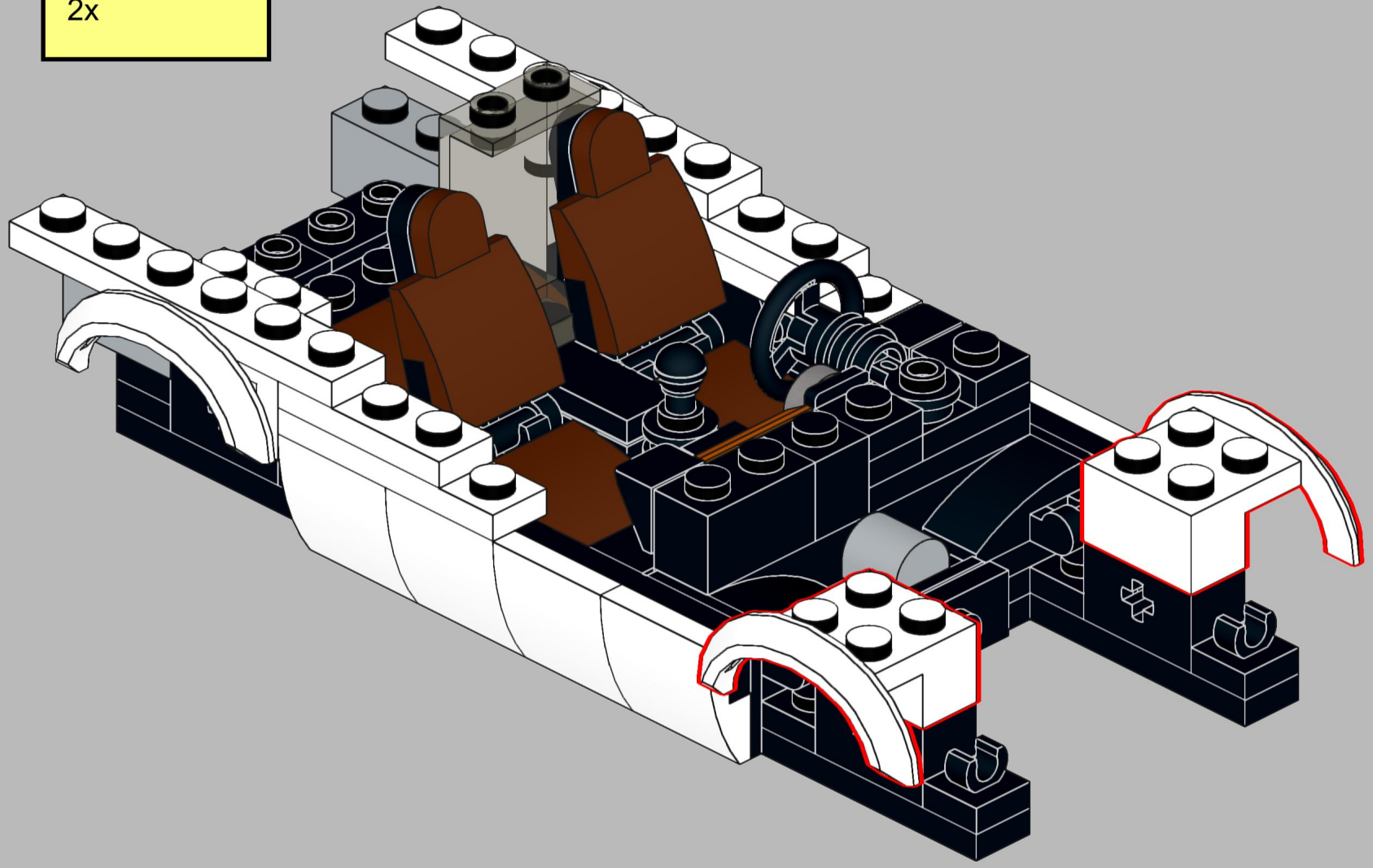

35

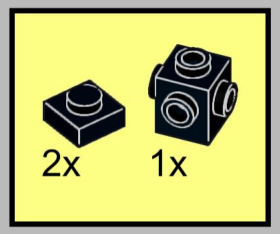

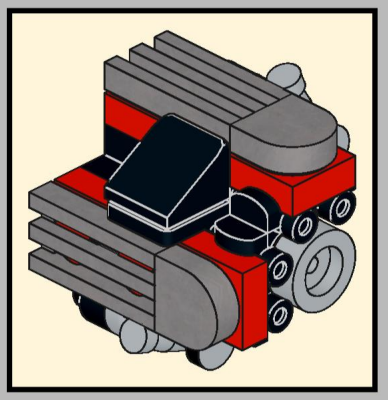

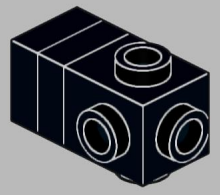

36



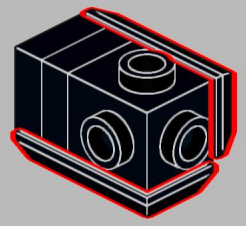

37

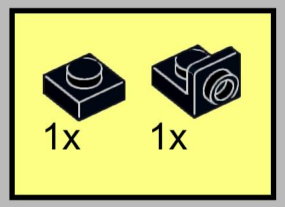

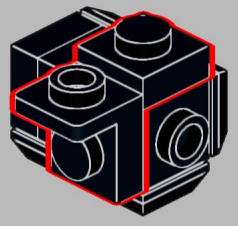

38

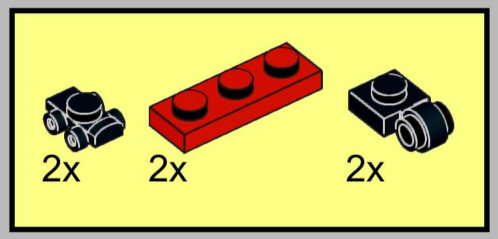

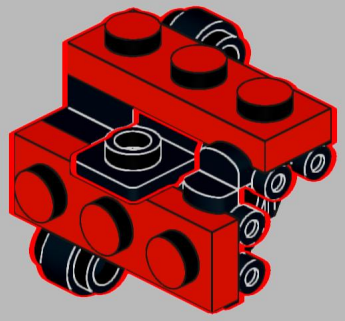

39

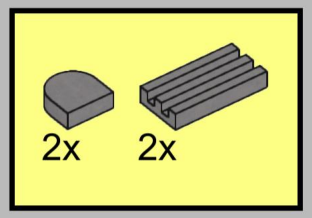

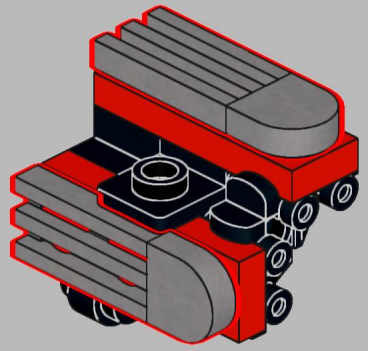

40

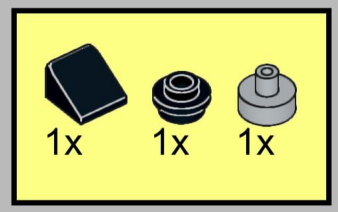

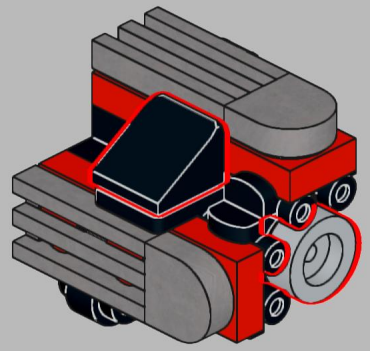

41

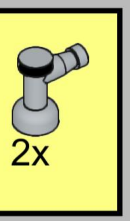

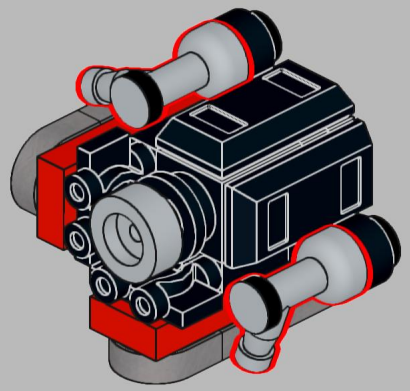

42

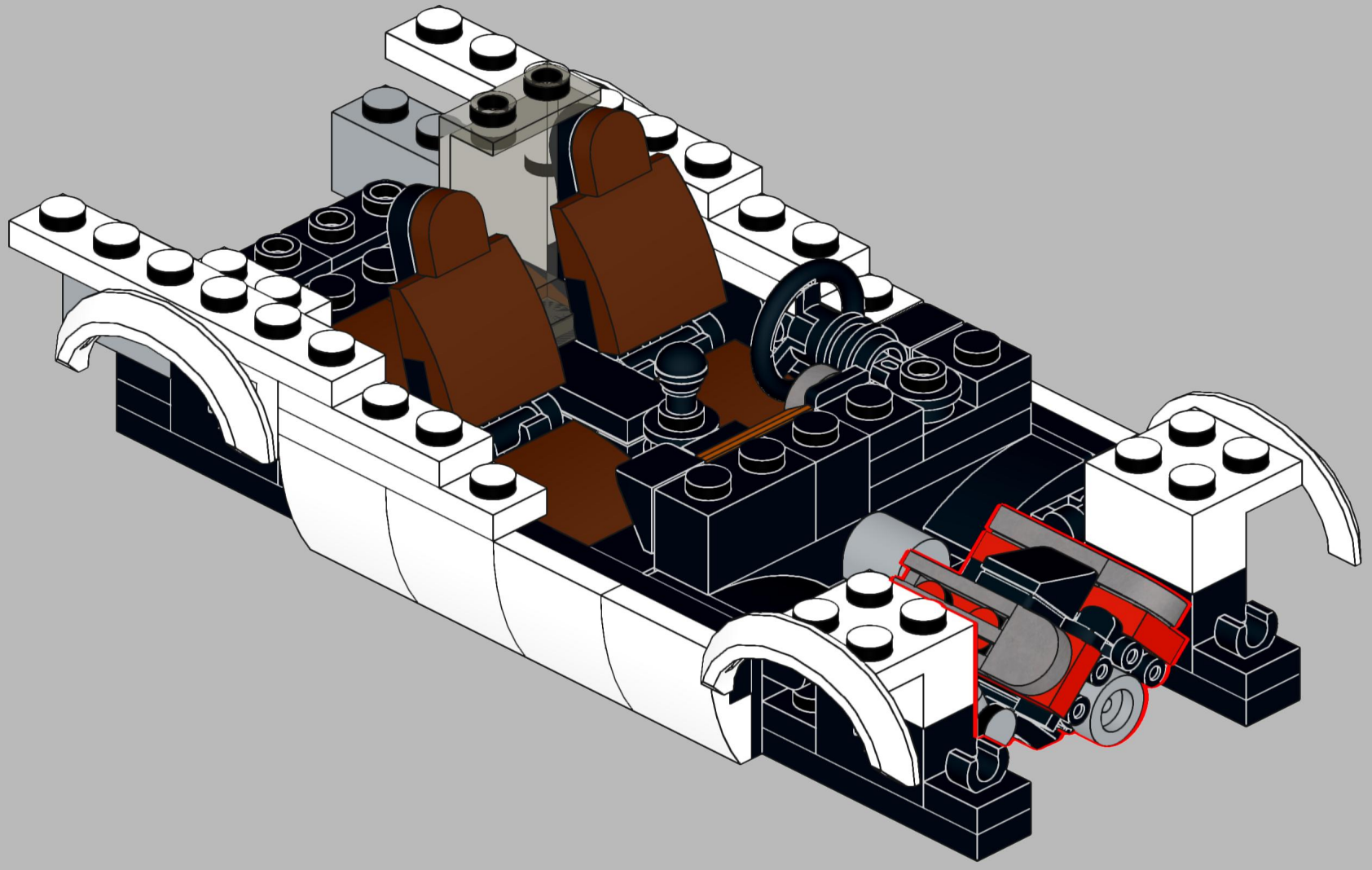

43

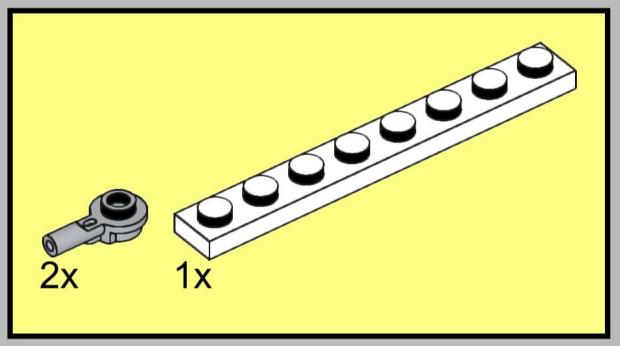

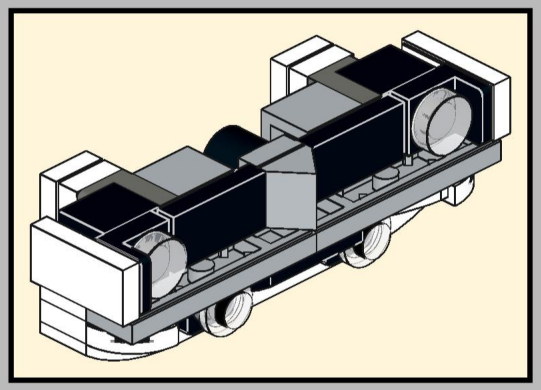

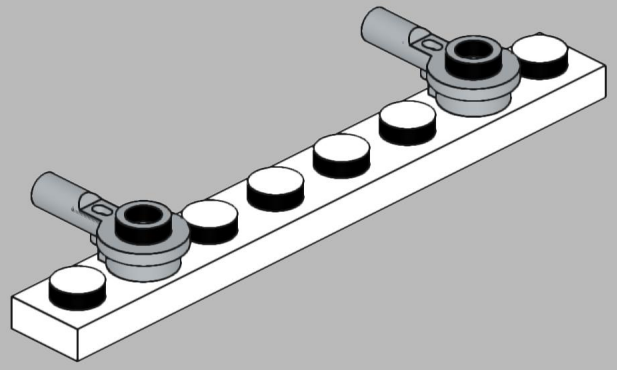

44

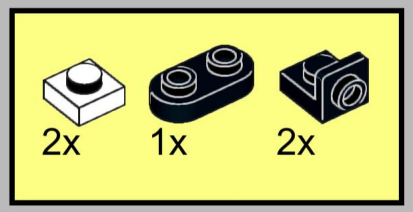

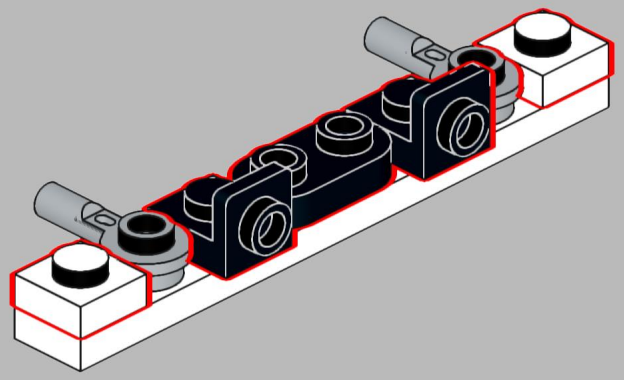

45

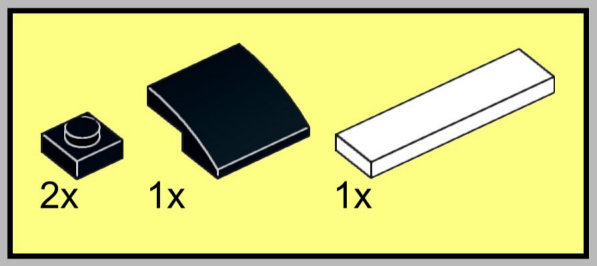

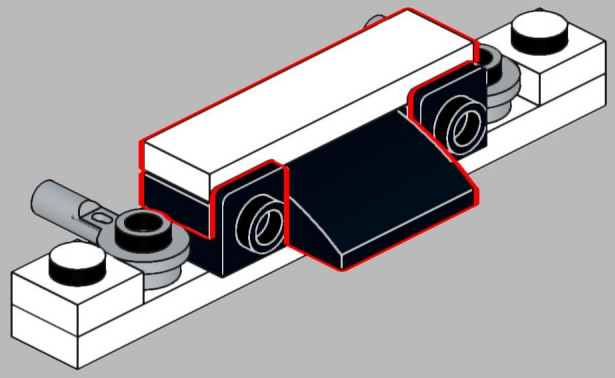

46

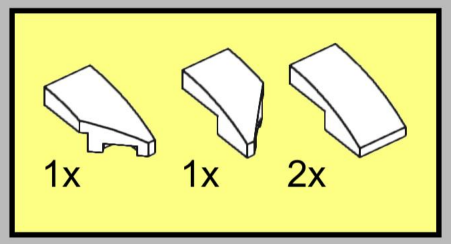

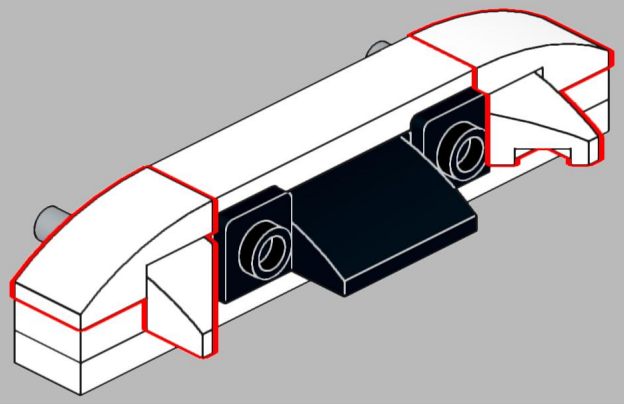

47

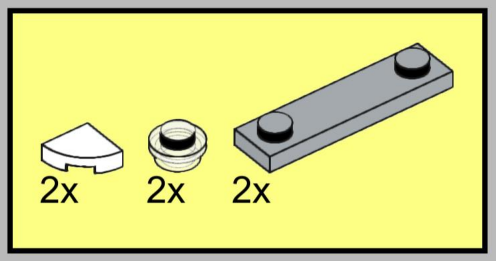

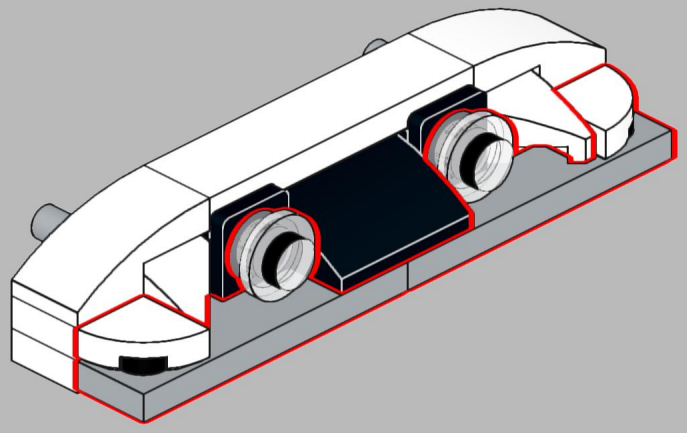

48

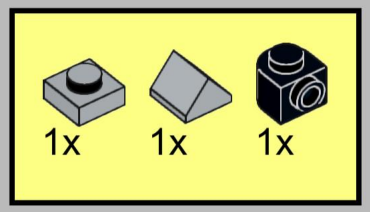

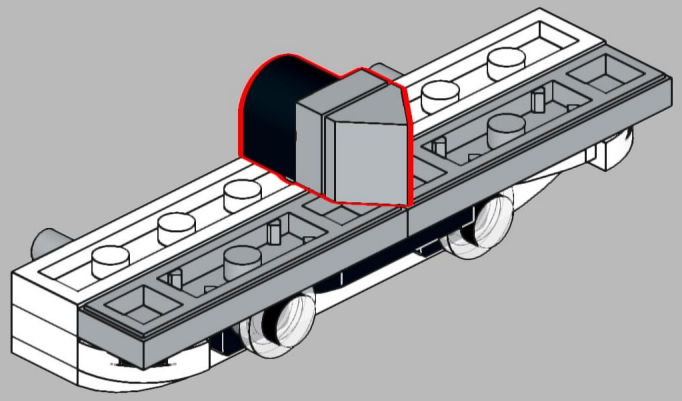

49

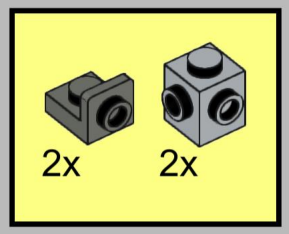

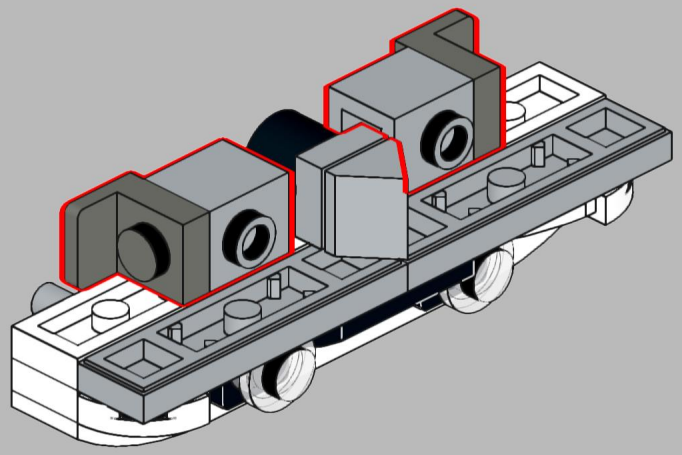

50

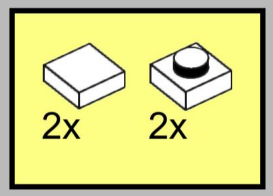

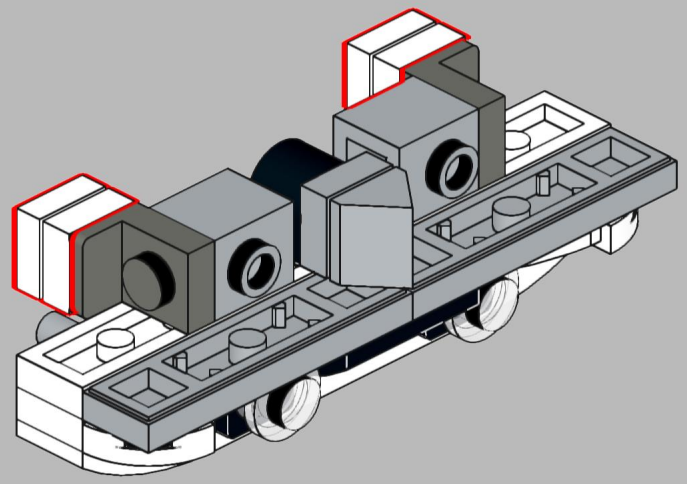

51

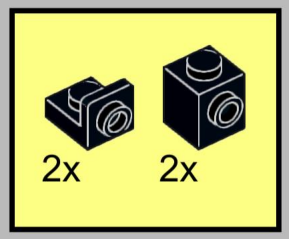

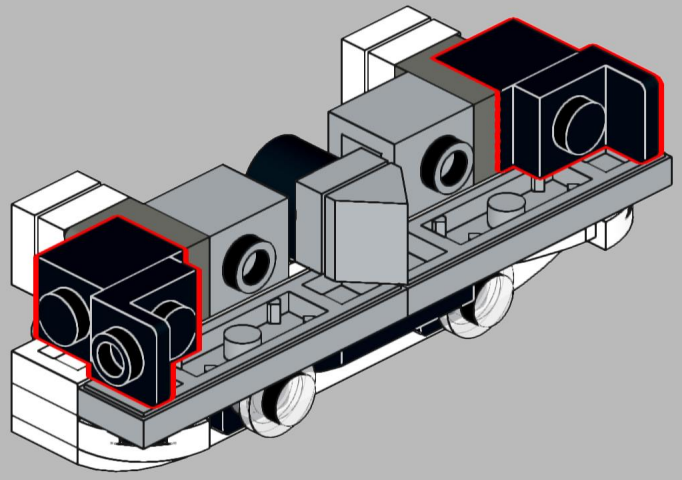

52

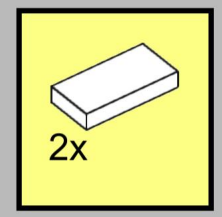

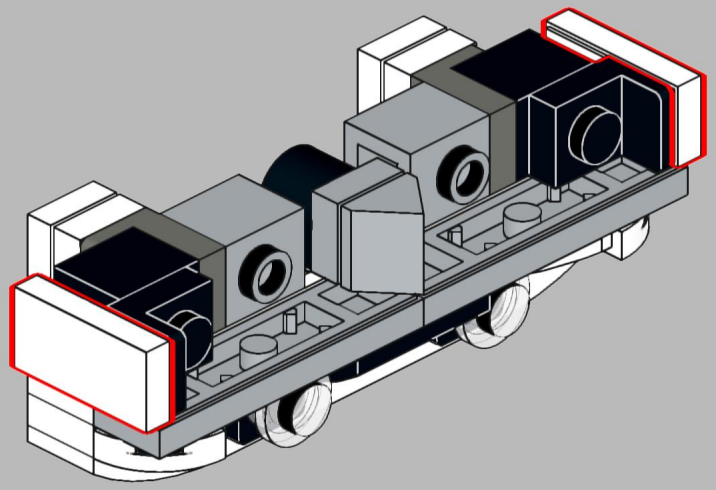

53

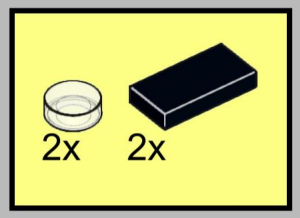

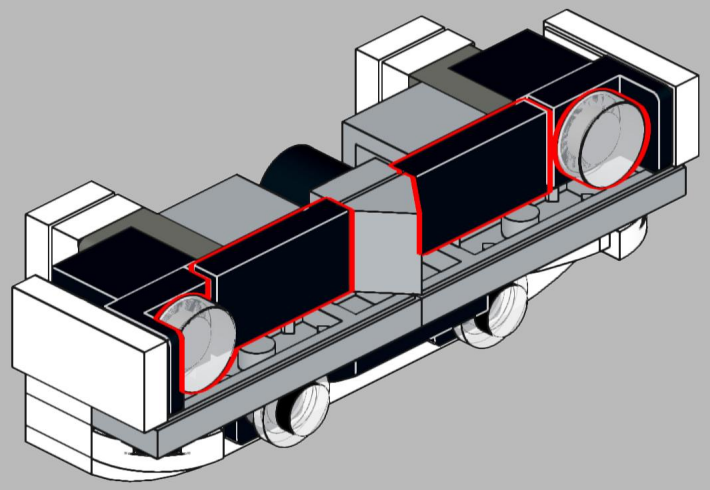

54

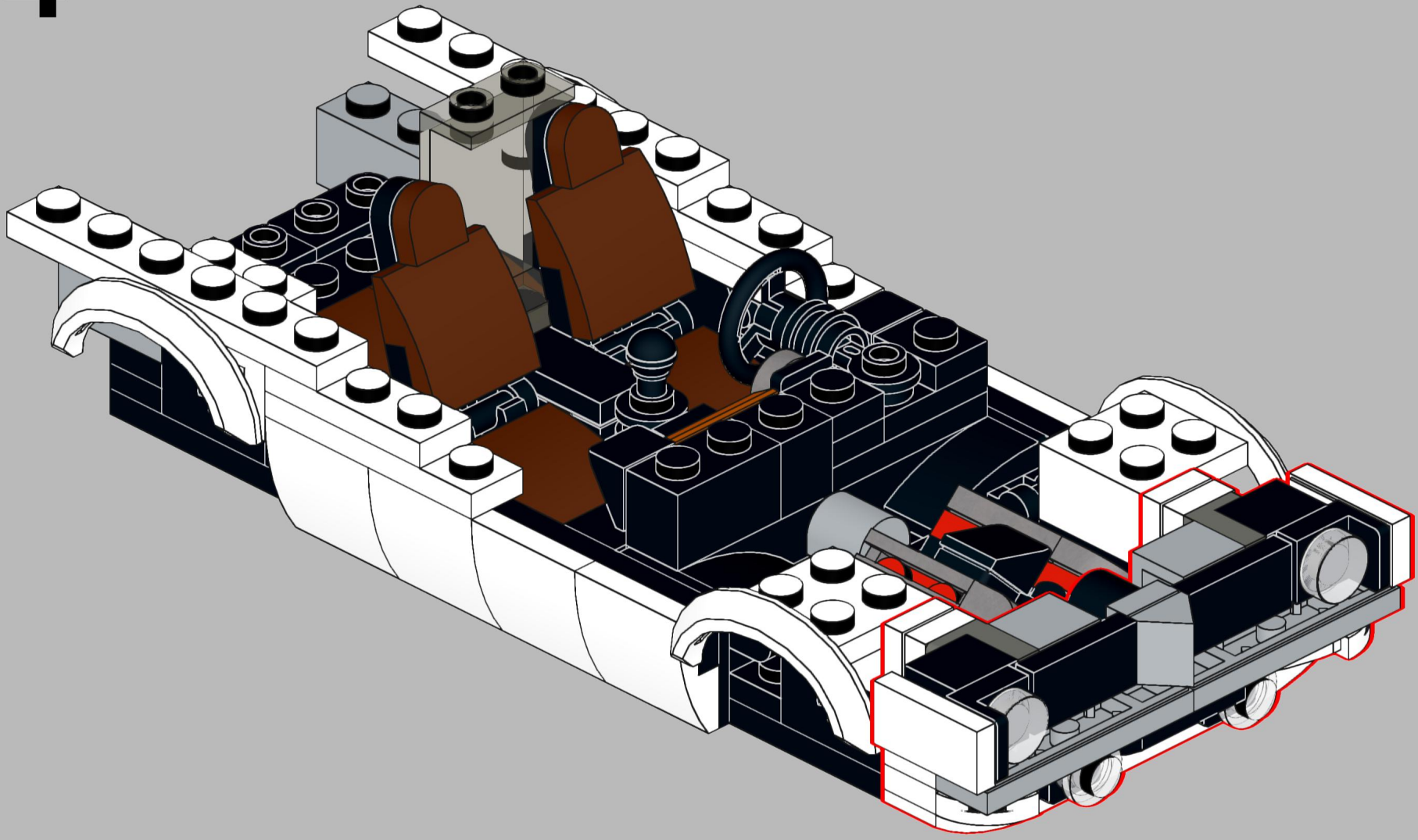

55

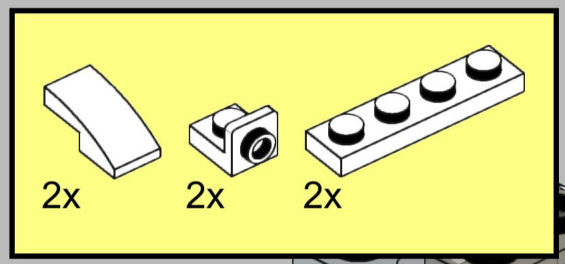

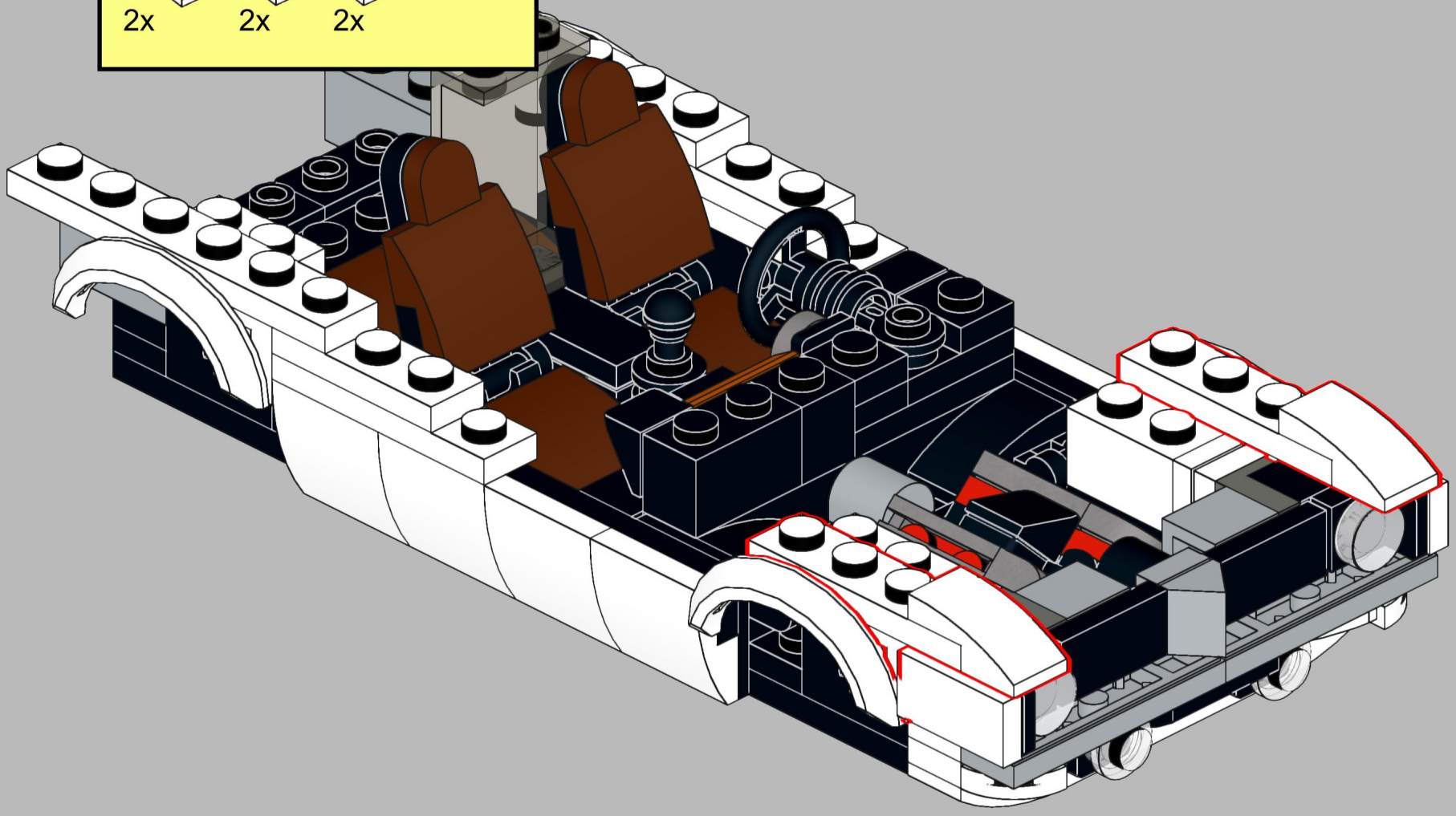

56

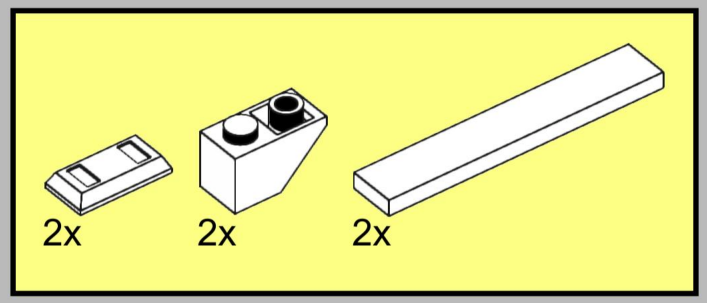

57

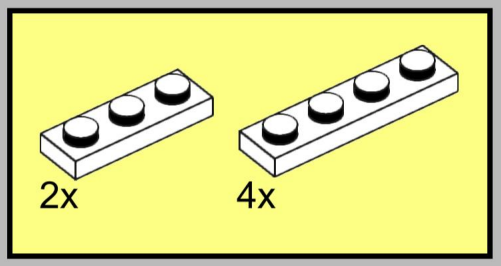

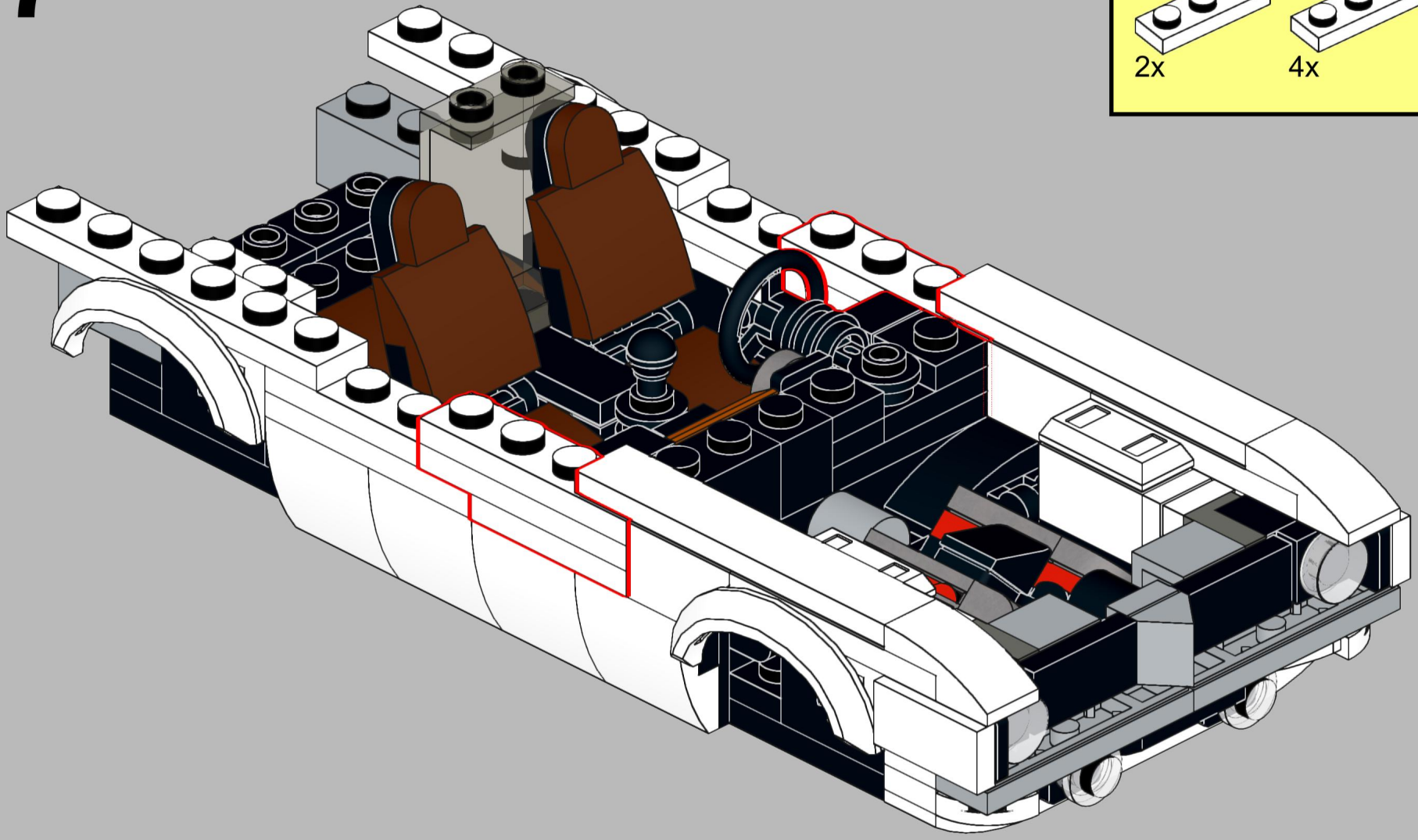

58

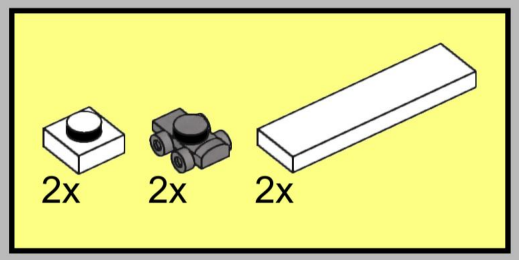

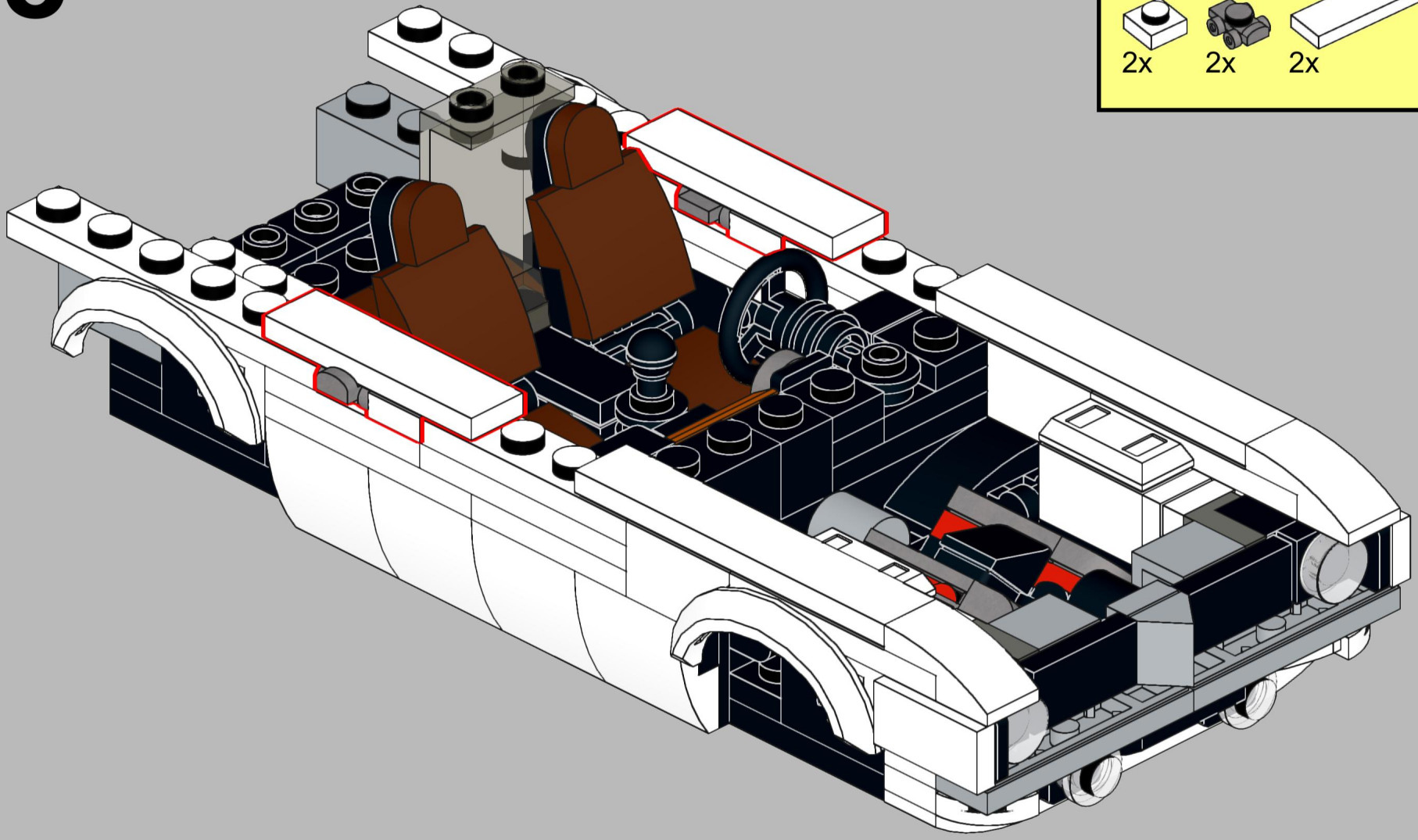

59

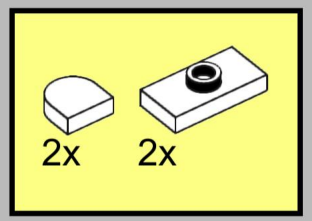

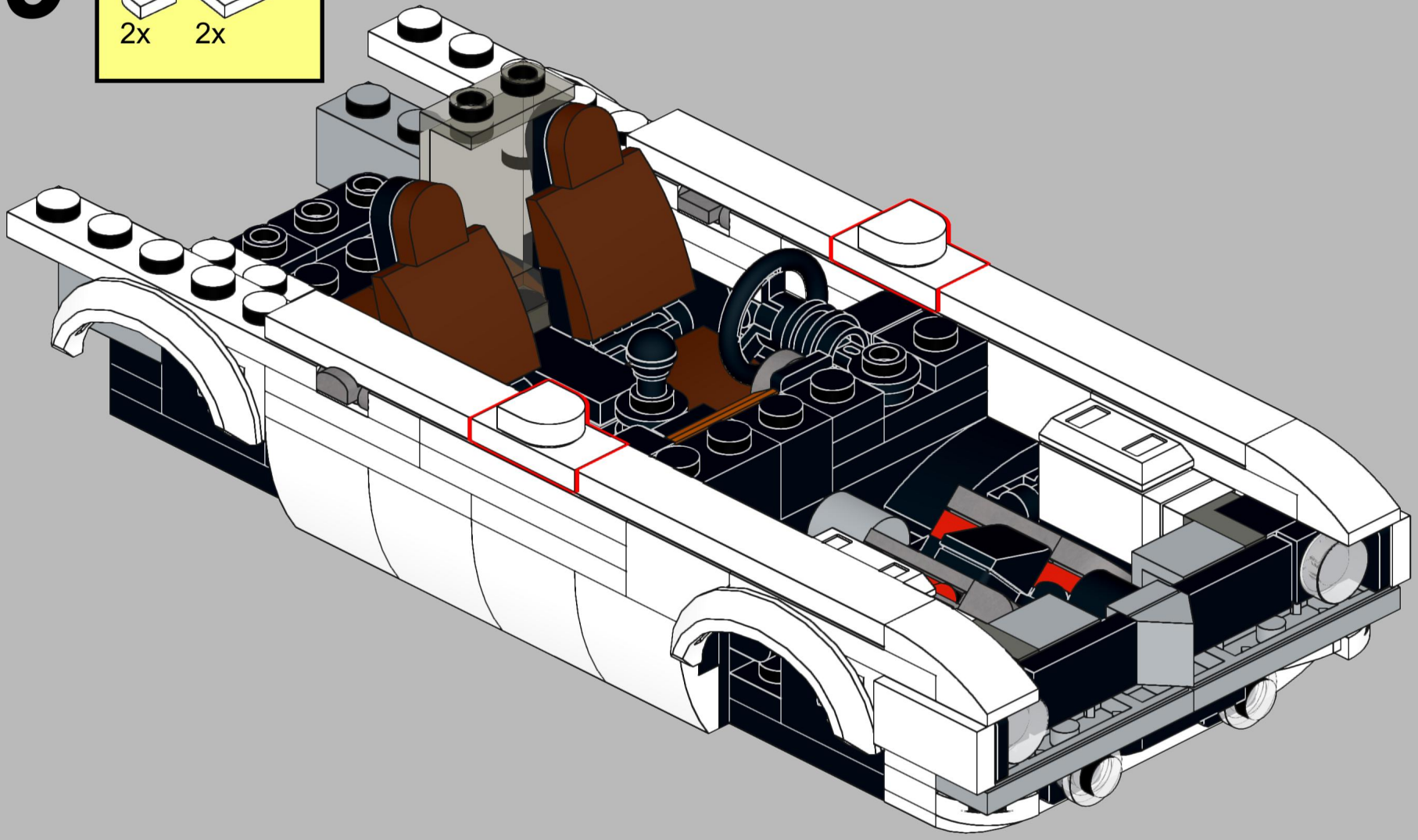

60

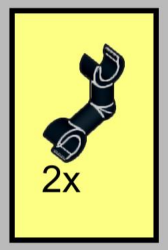

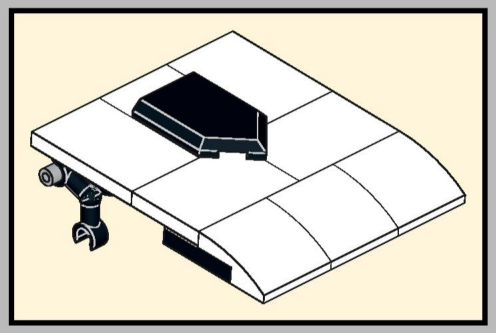

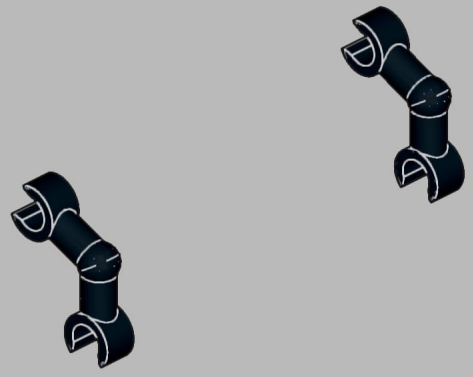

61

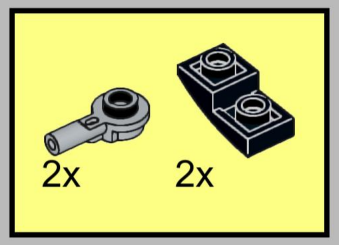

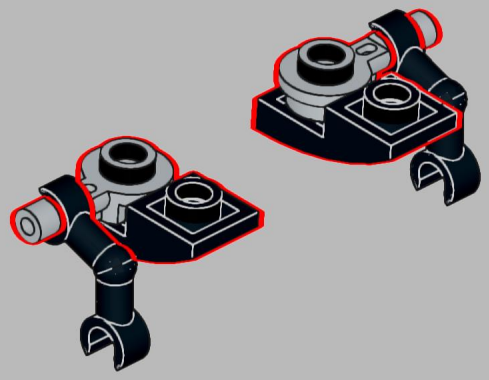

62

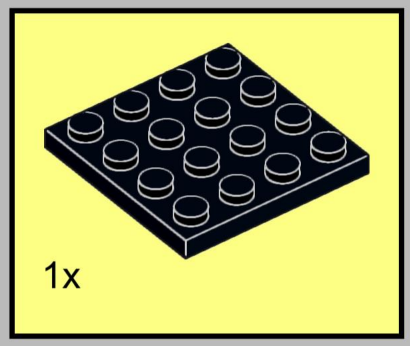

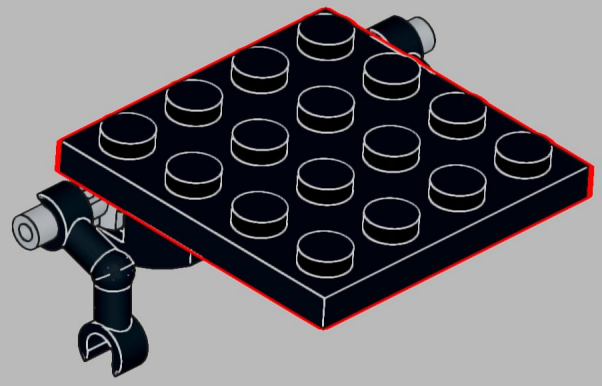

63

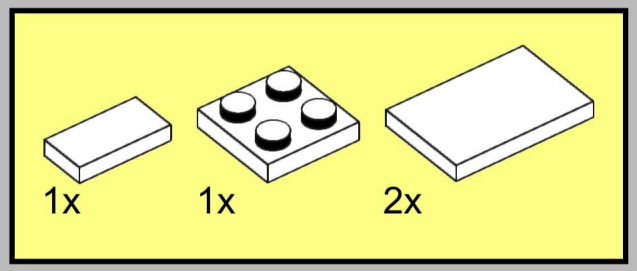

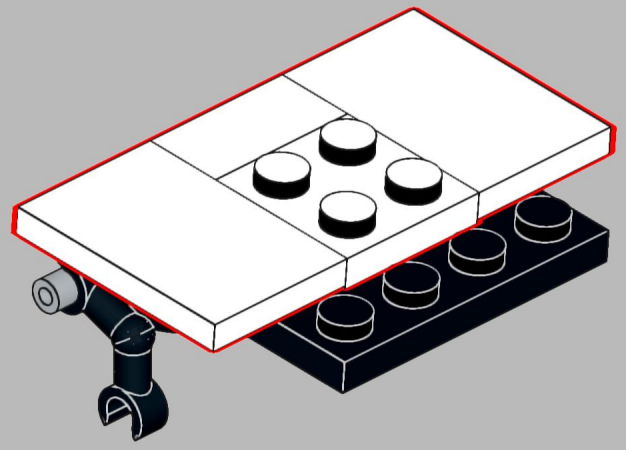

64

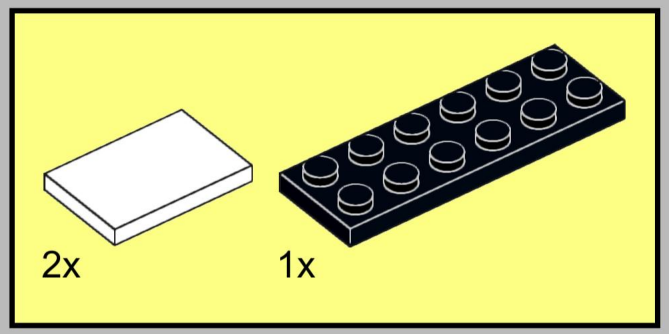

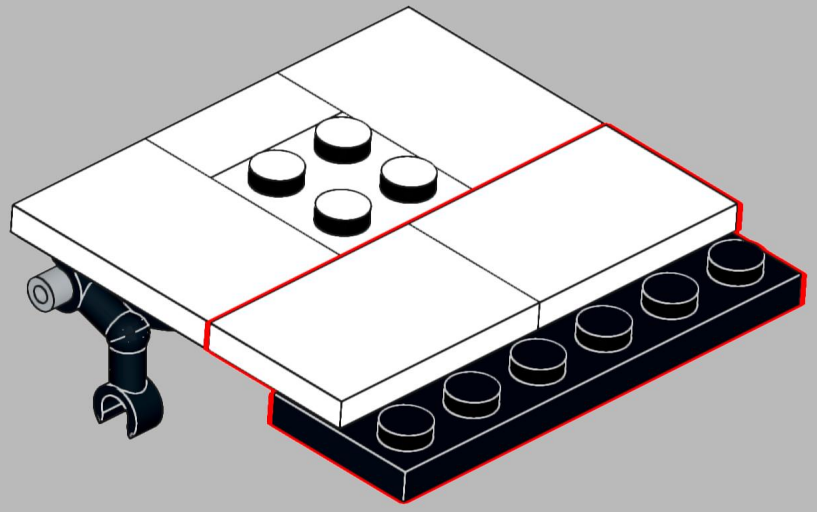

65

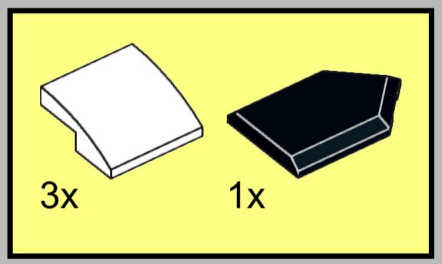

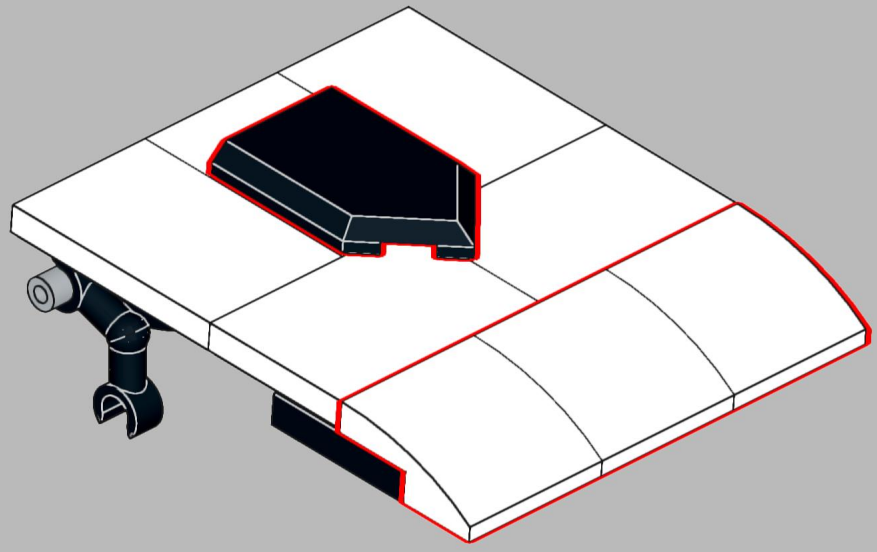

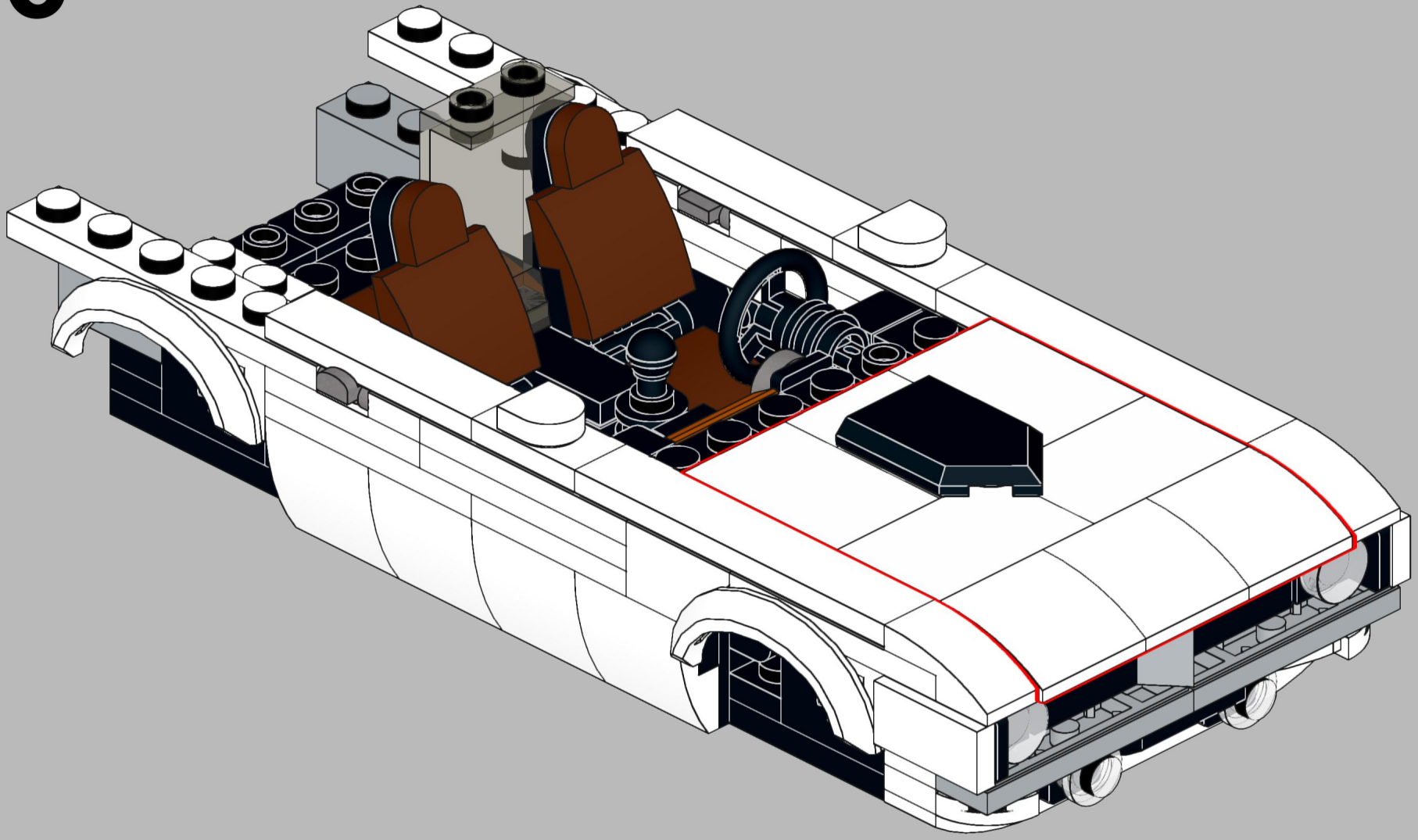

67

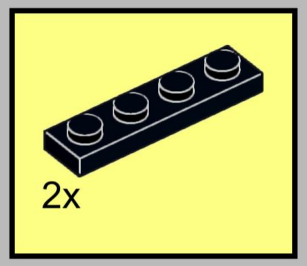

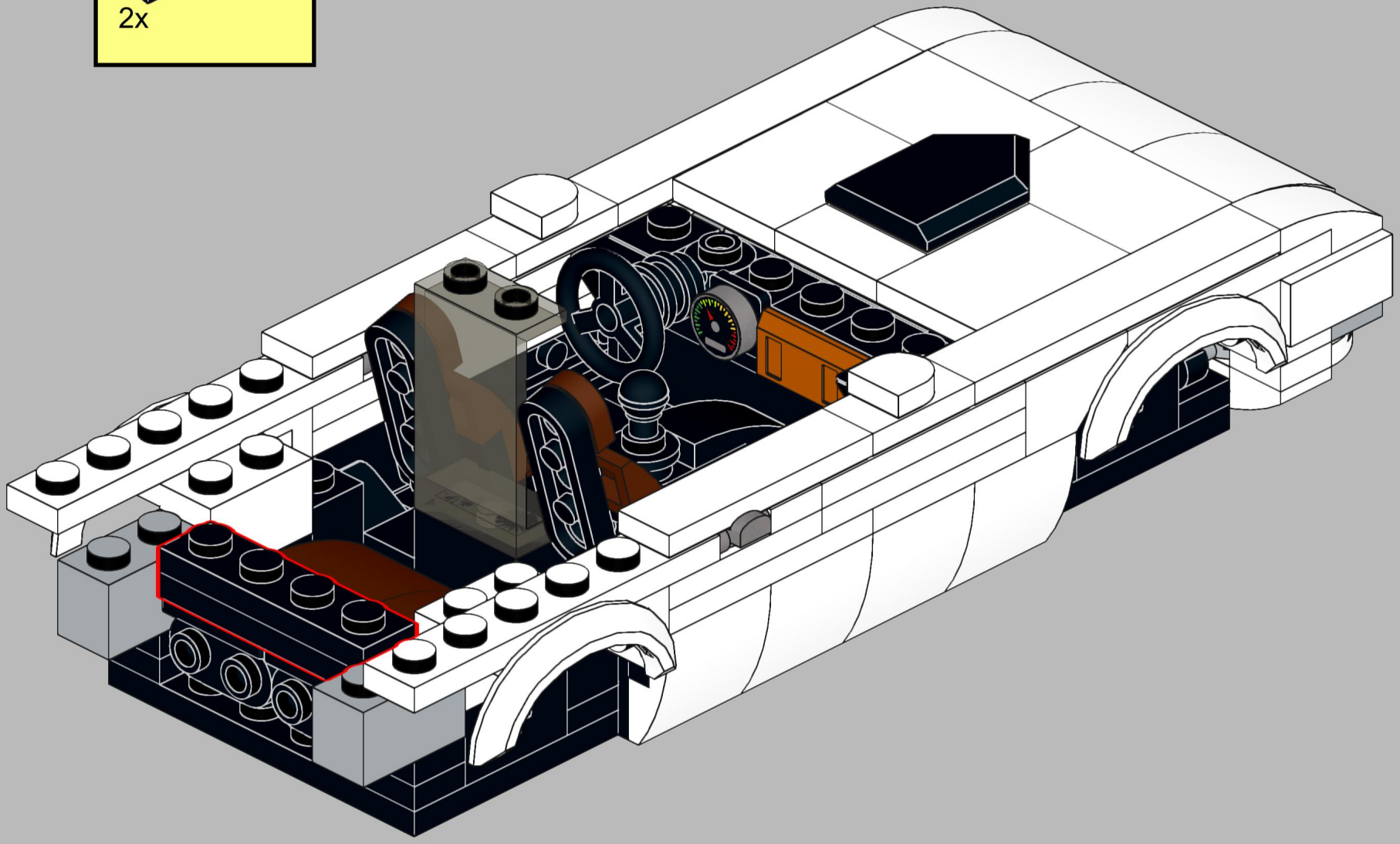

68

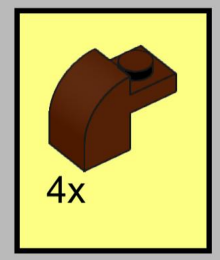

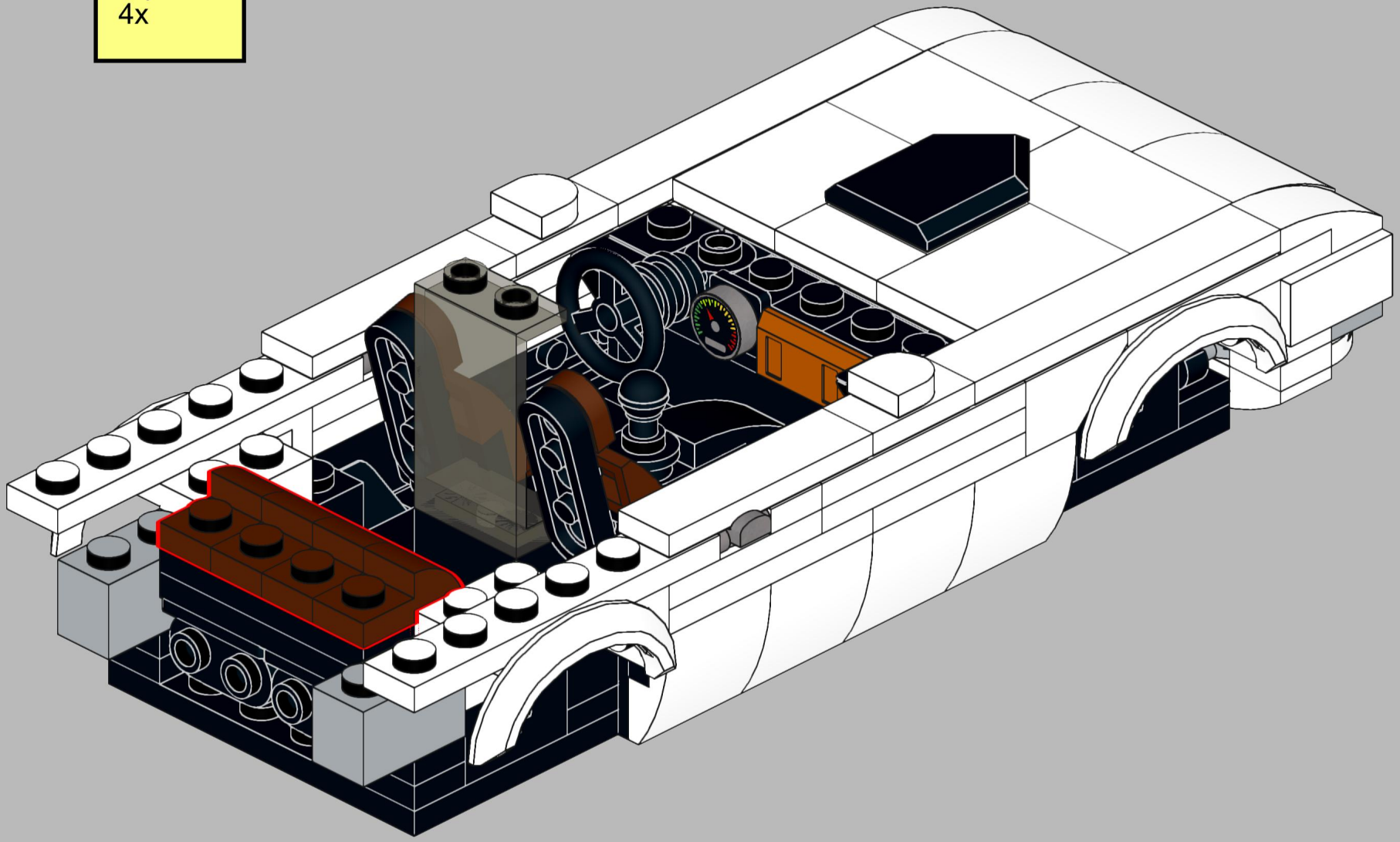

69

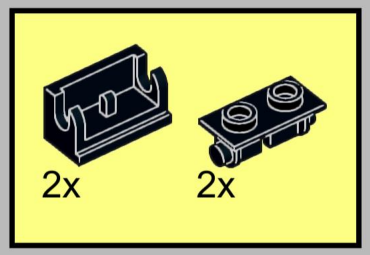

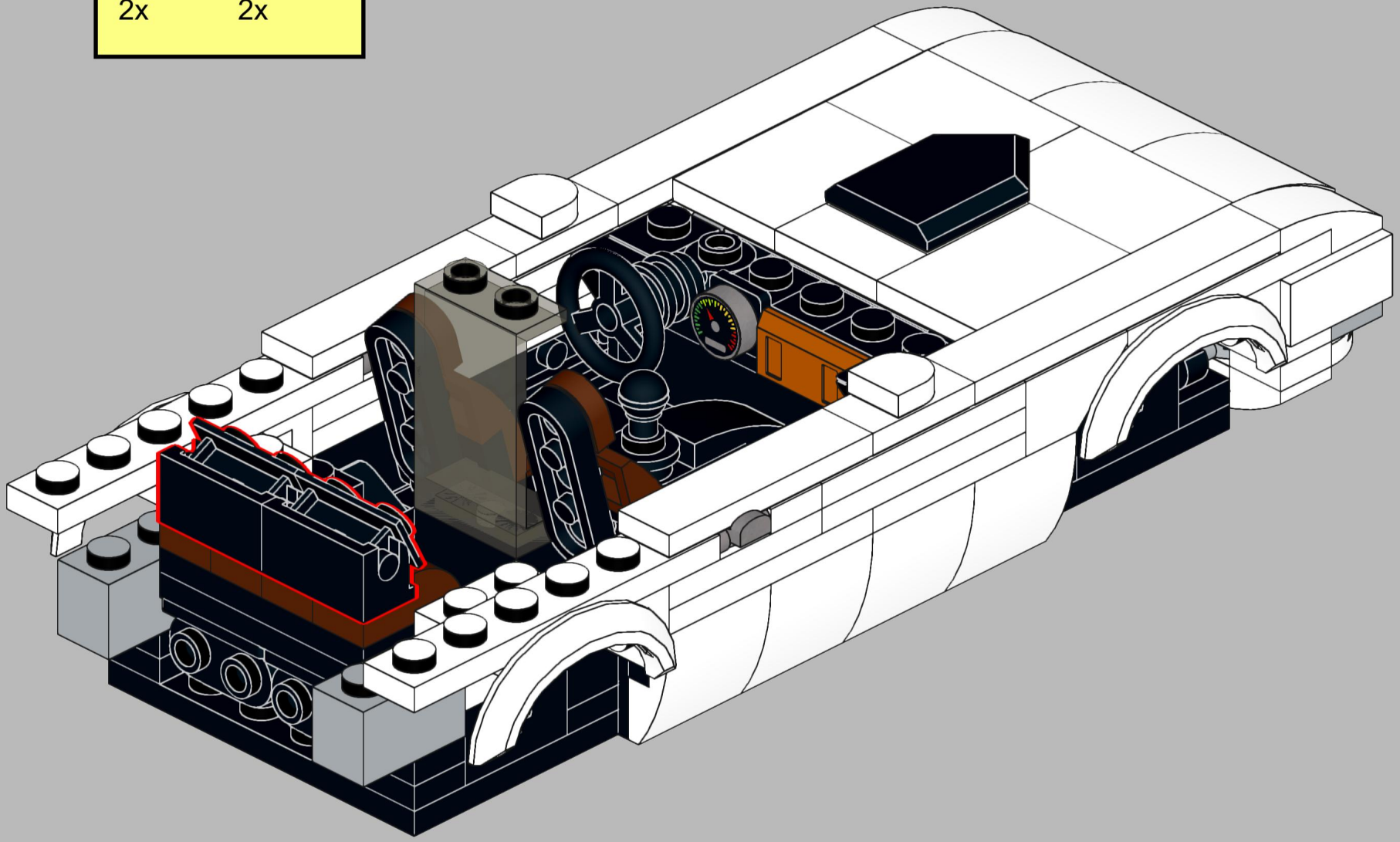

70

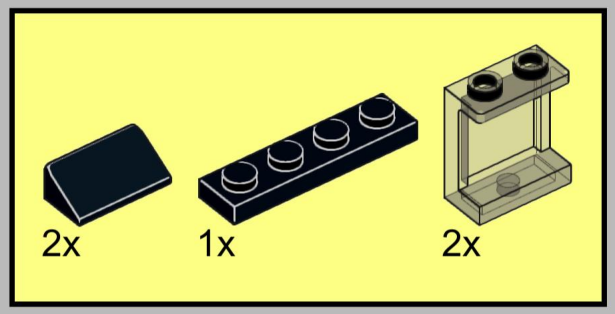

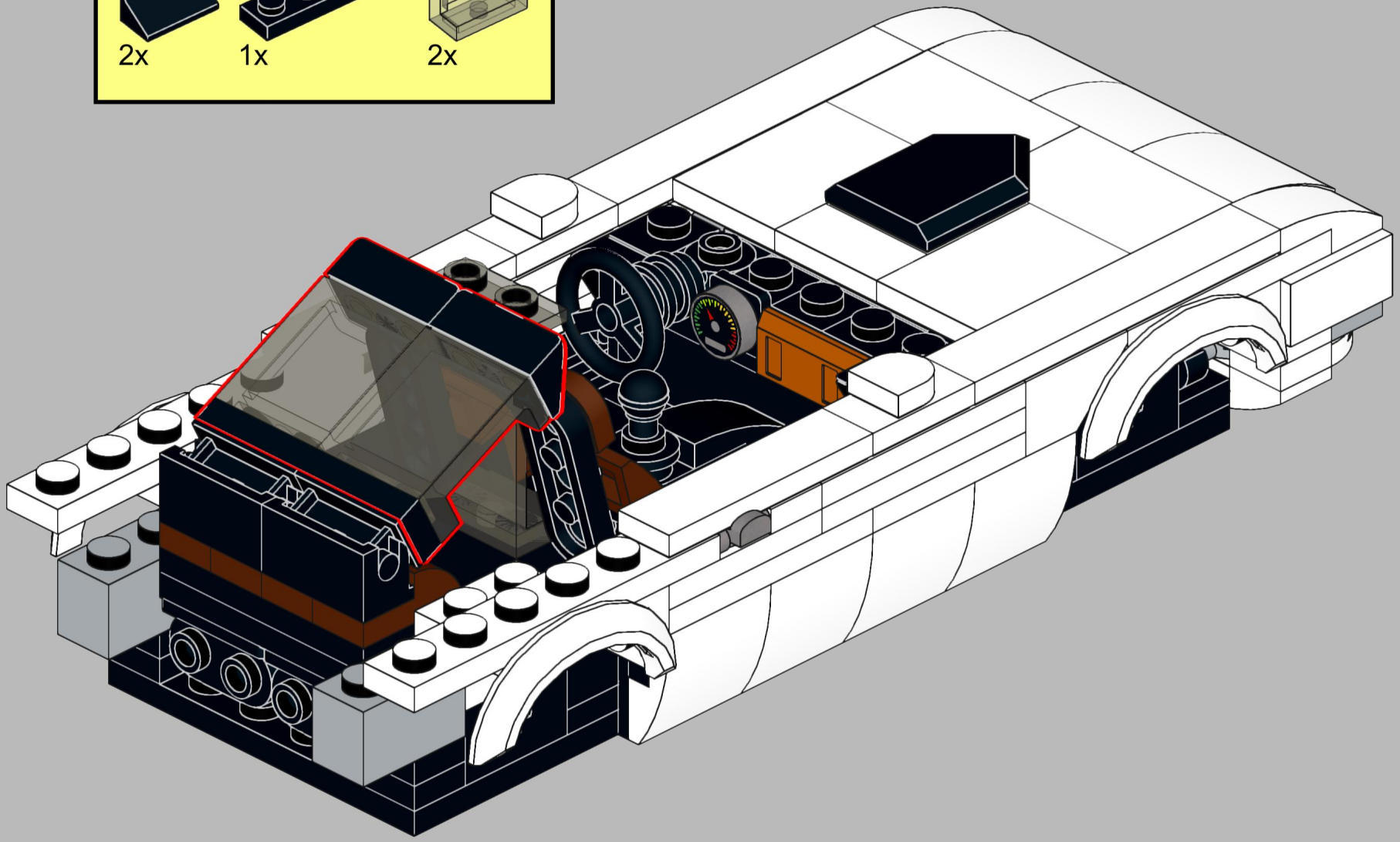

71

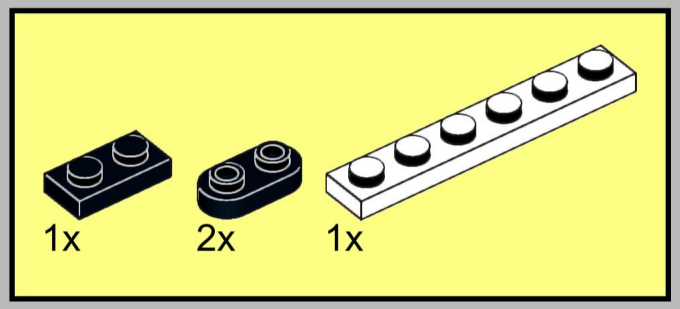

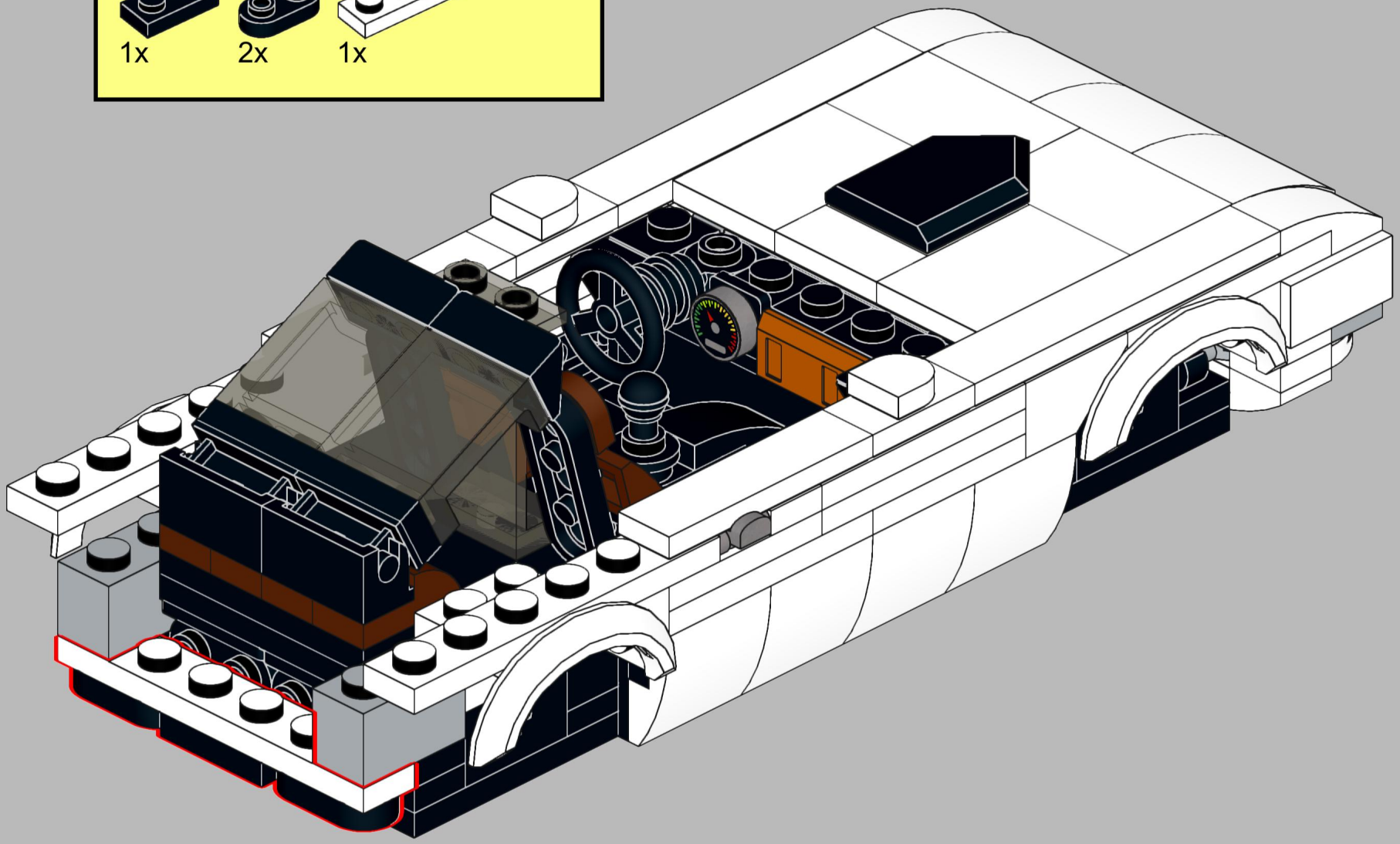

72

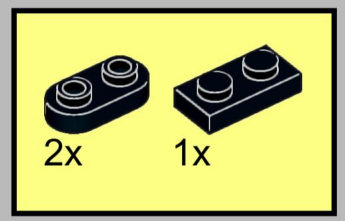

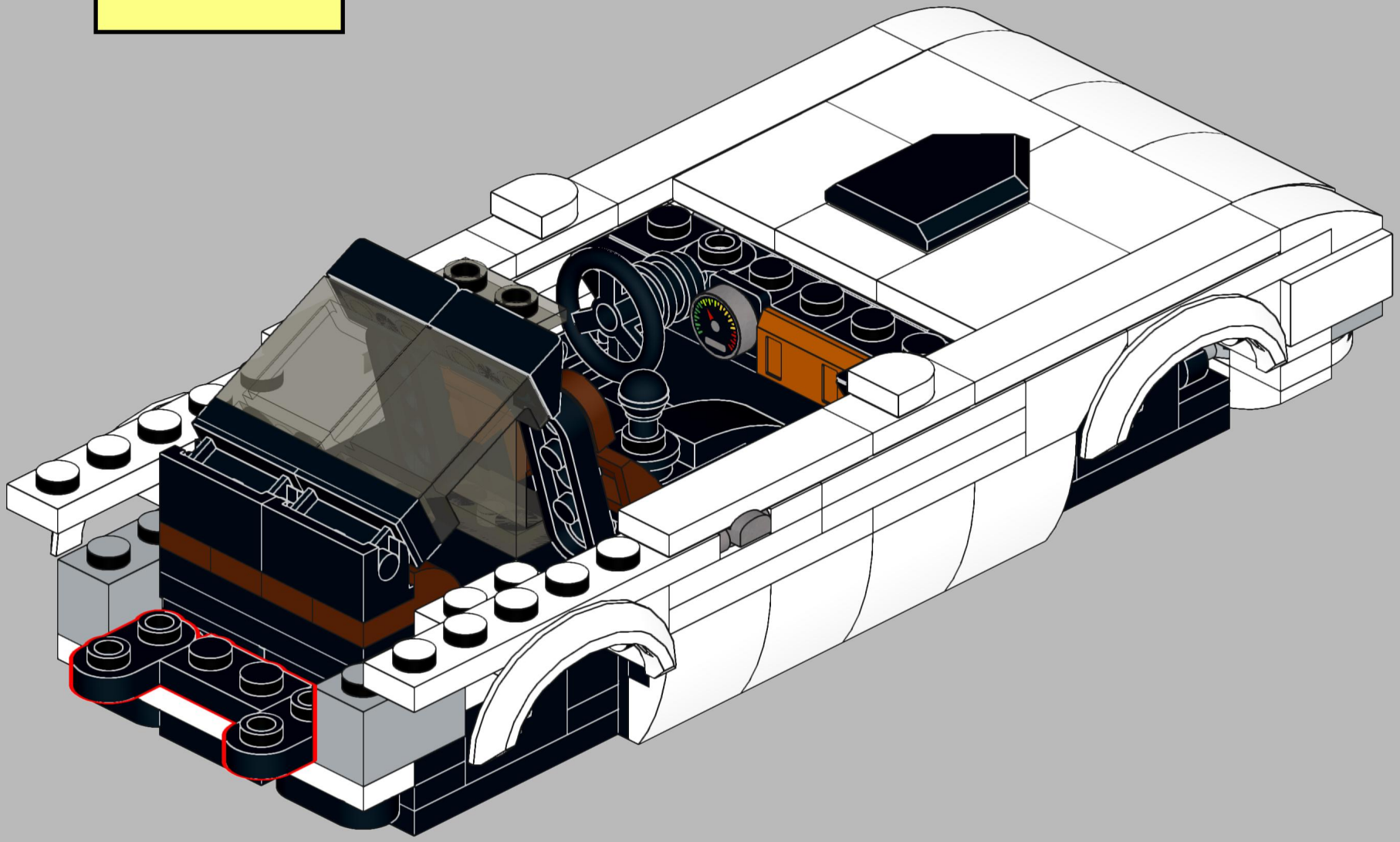

73

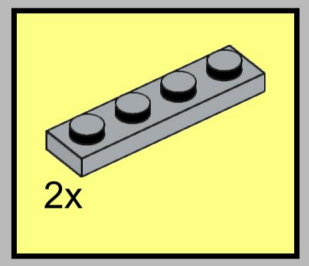

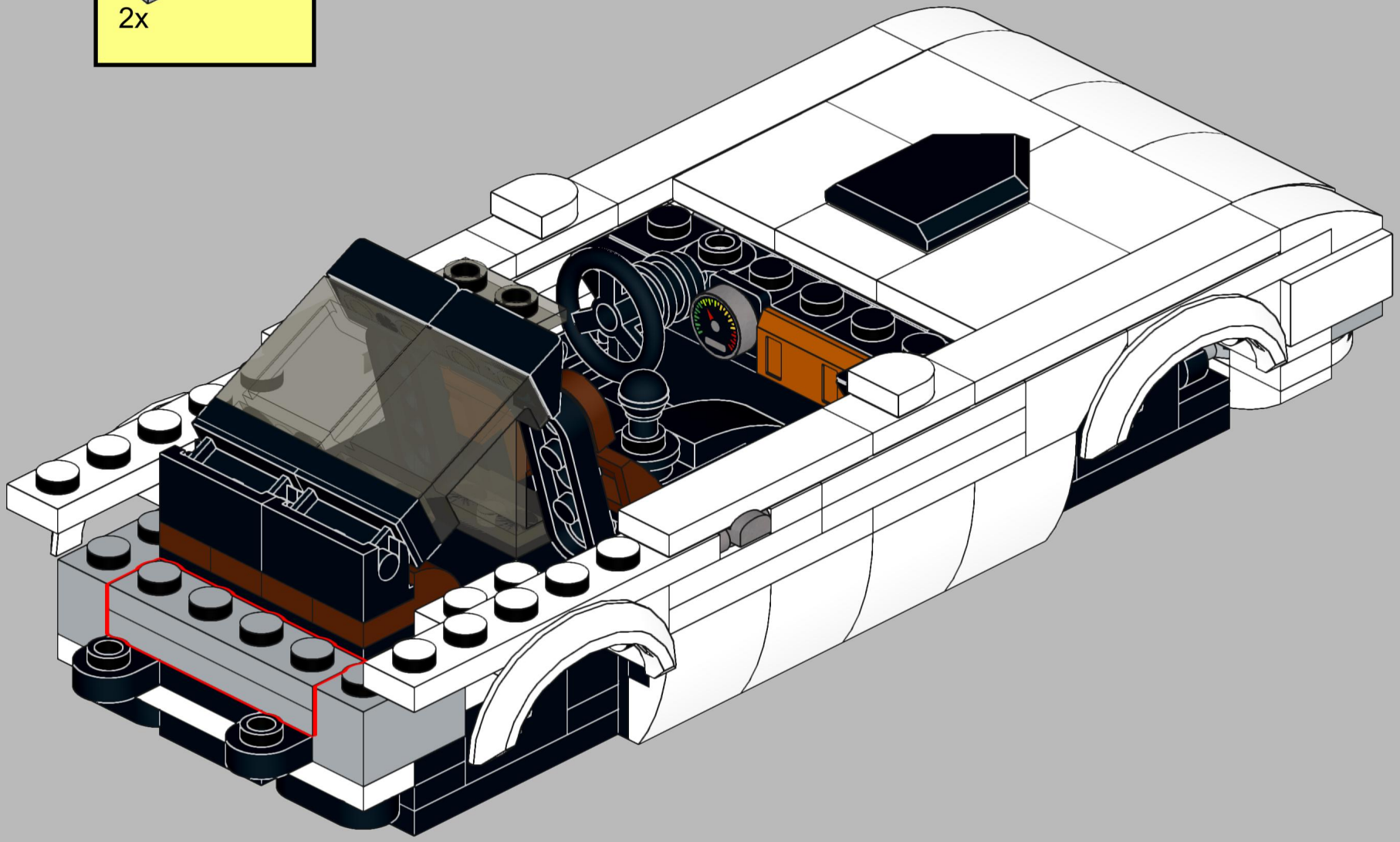

74

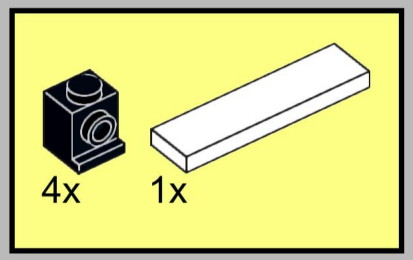

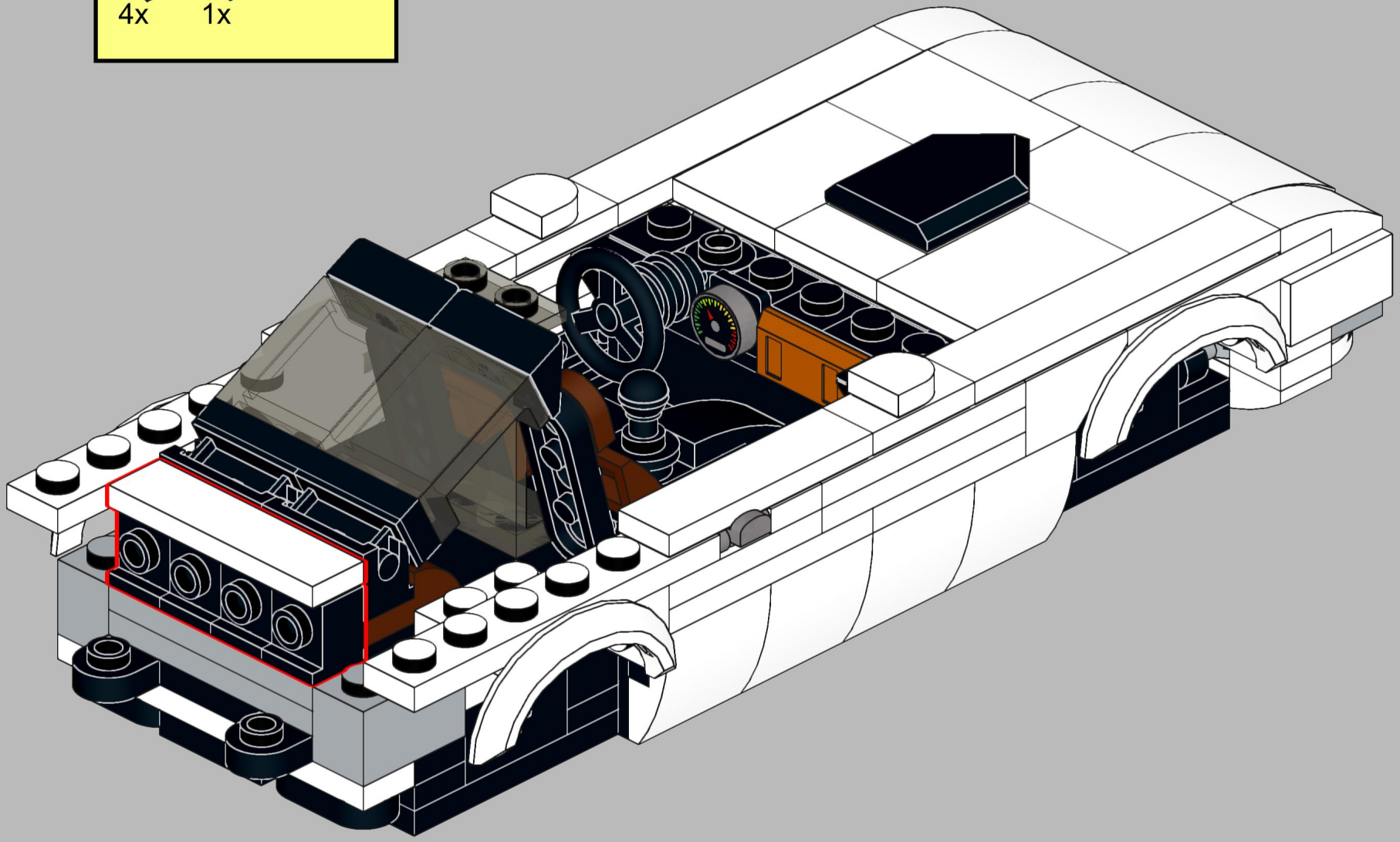

75

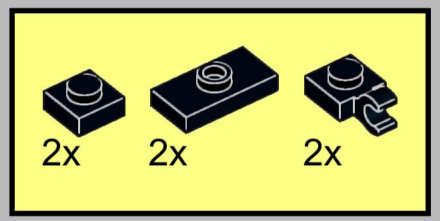

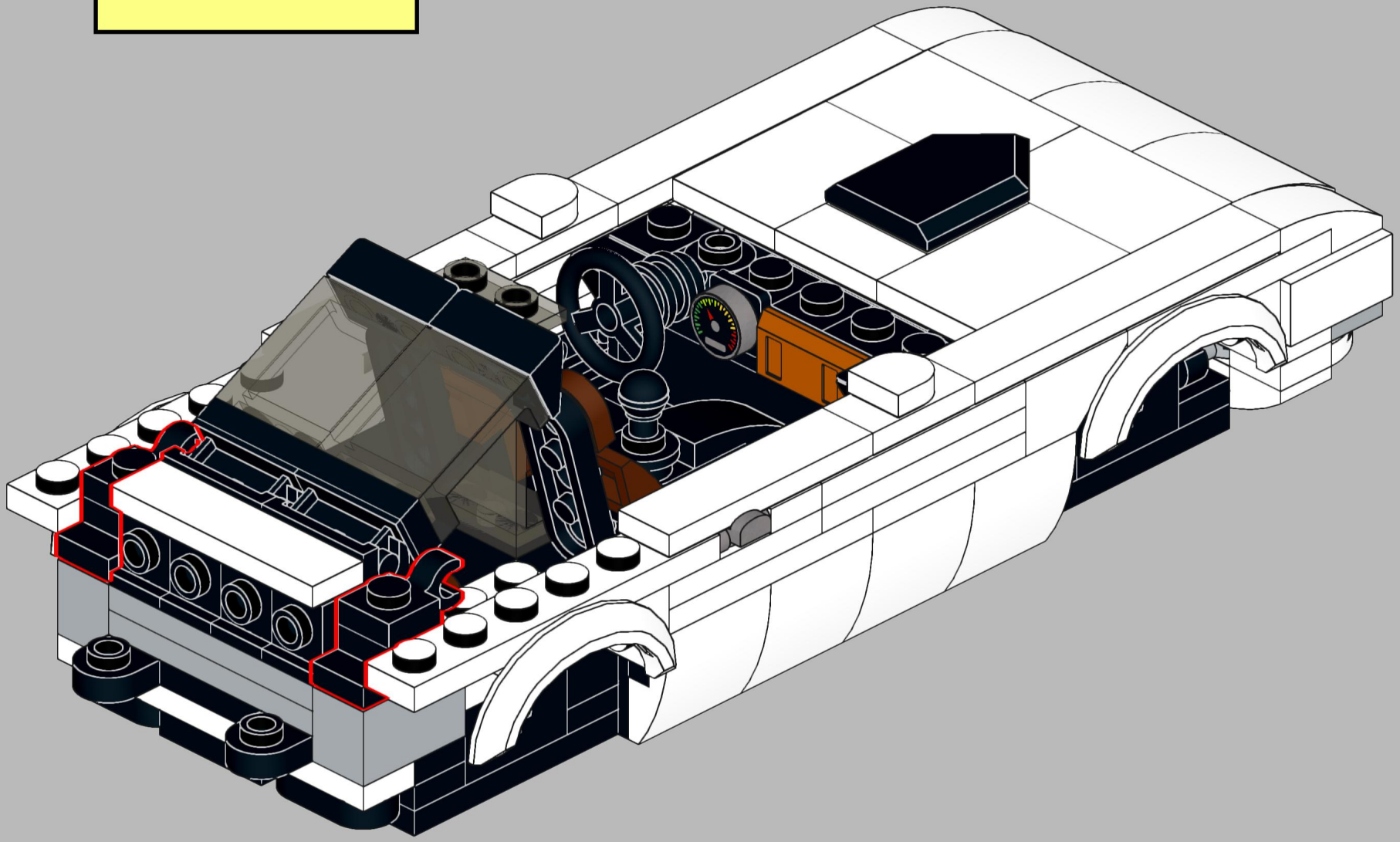

76

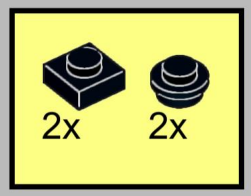

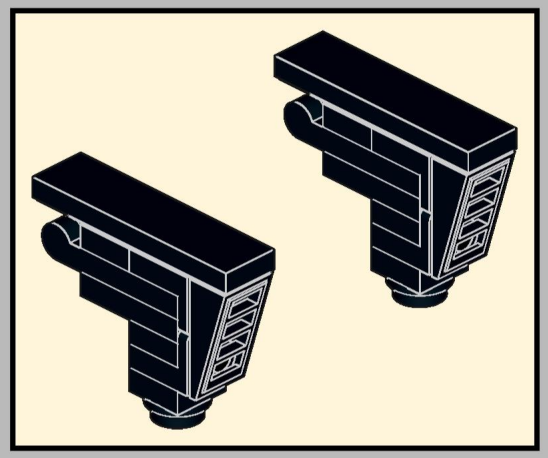

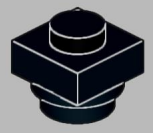

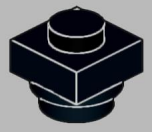

77

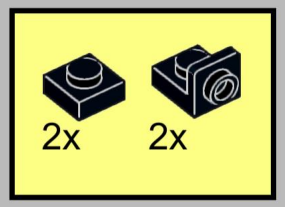

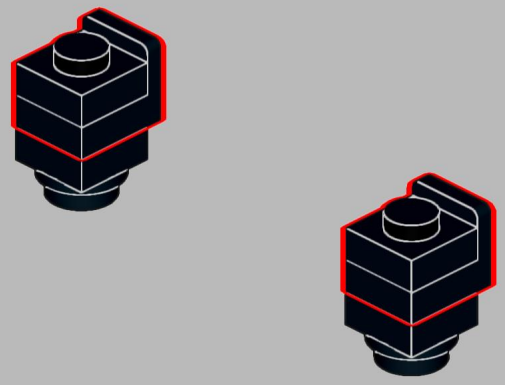

78

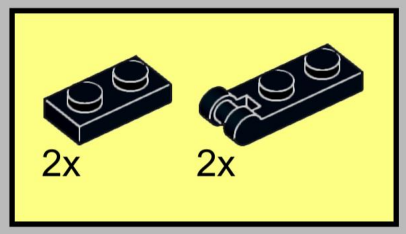

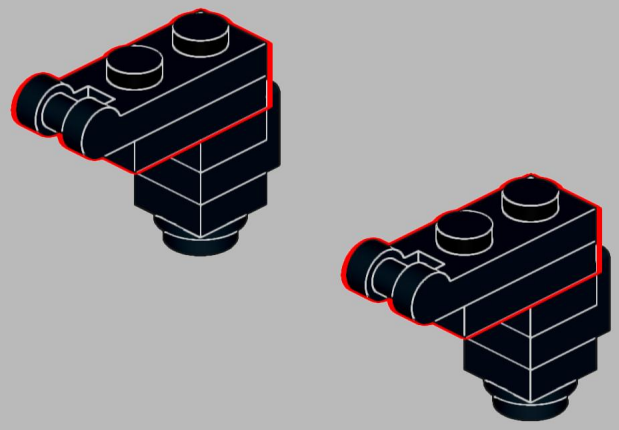

79

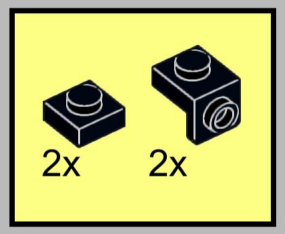

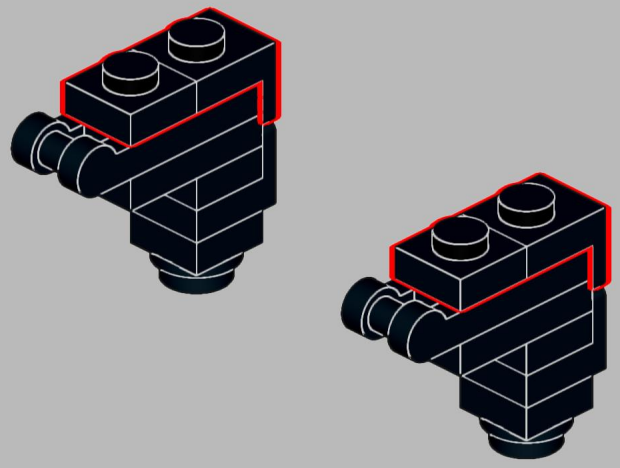

80

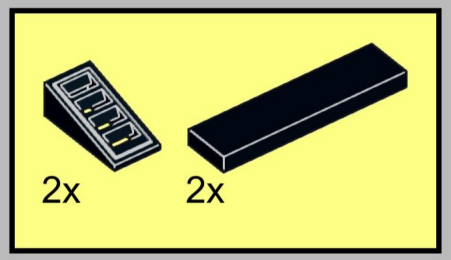

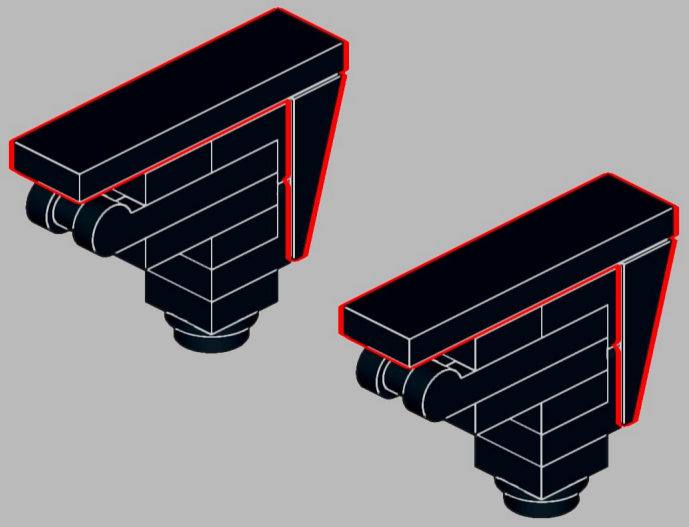

81

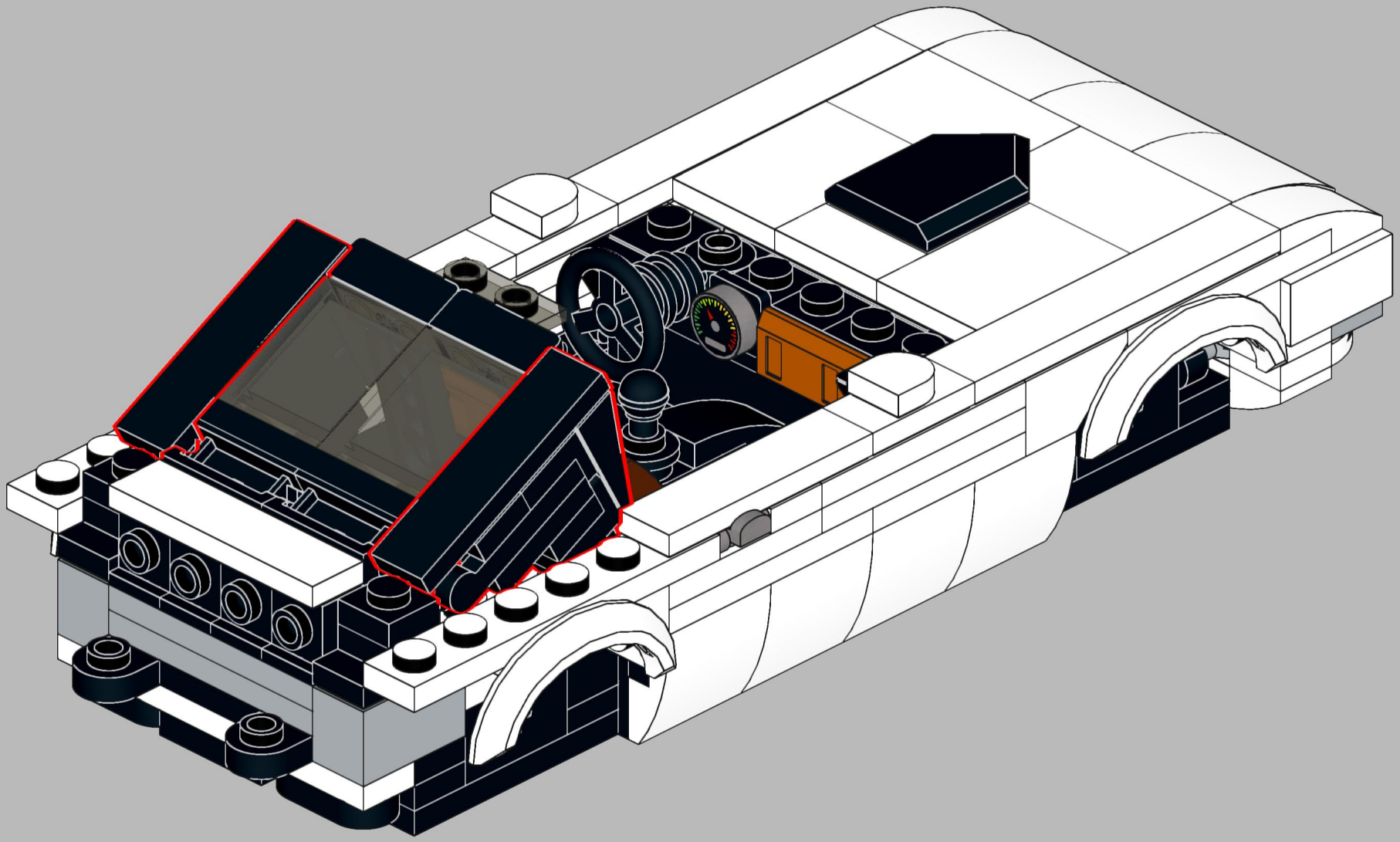

82

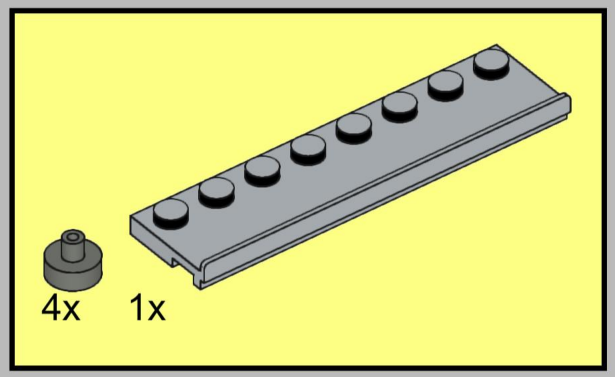

83

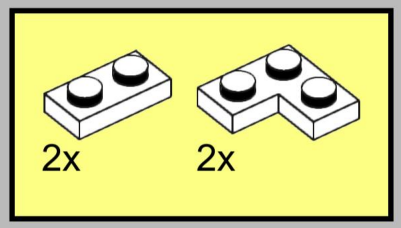

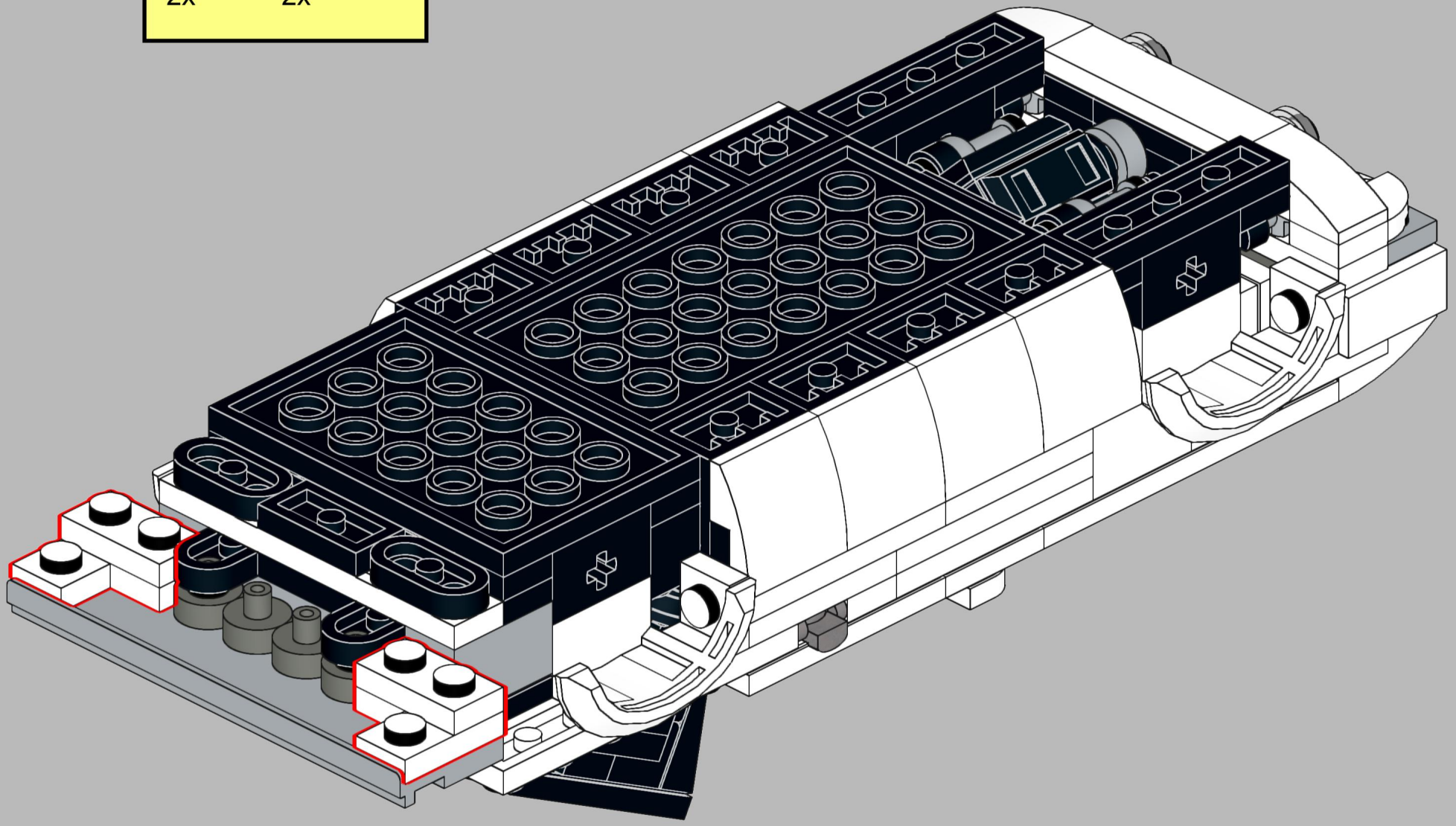

84

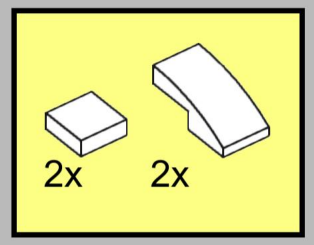

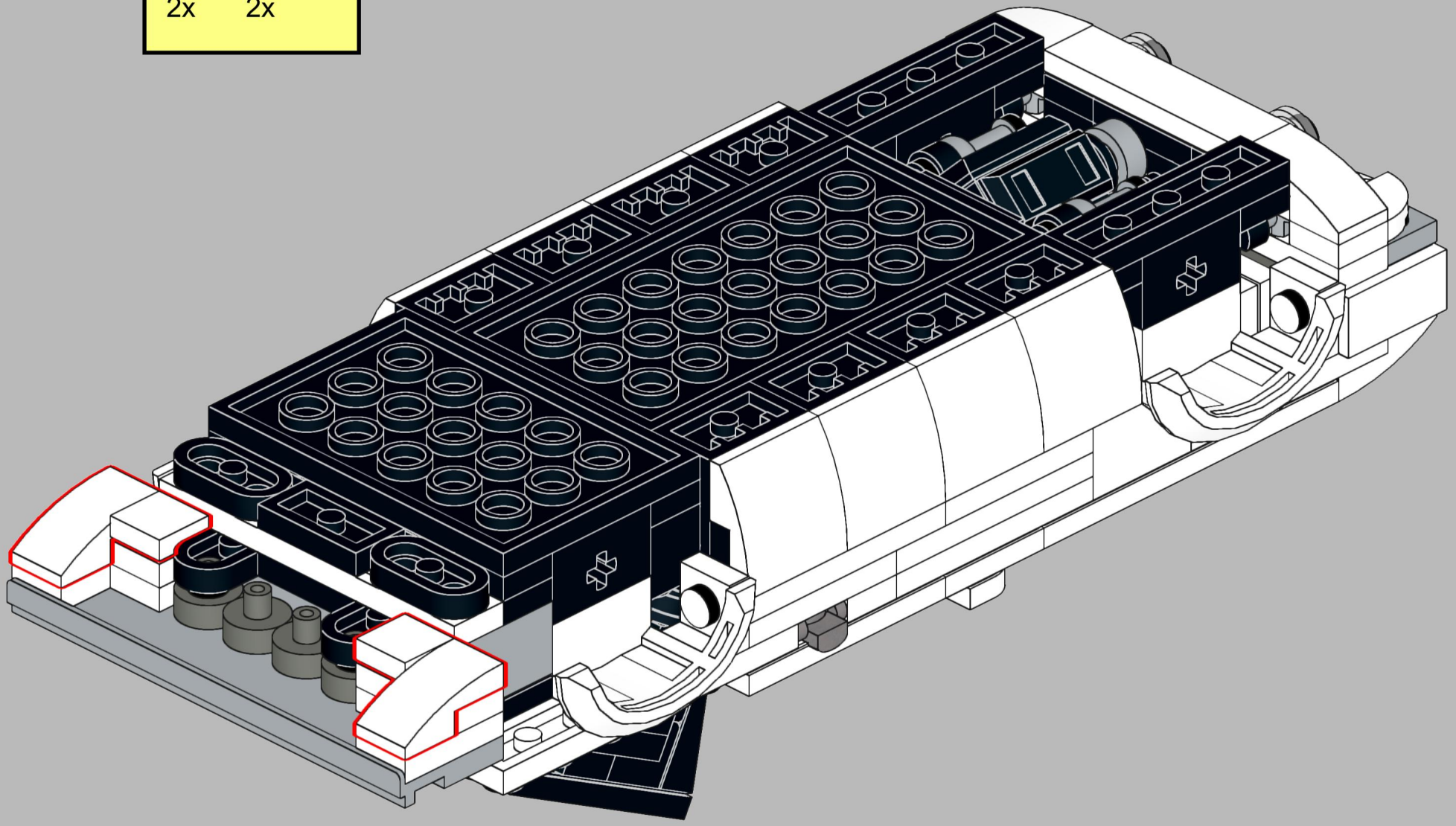

85

1x

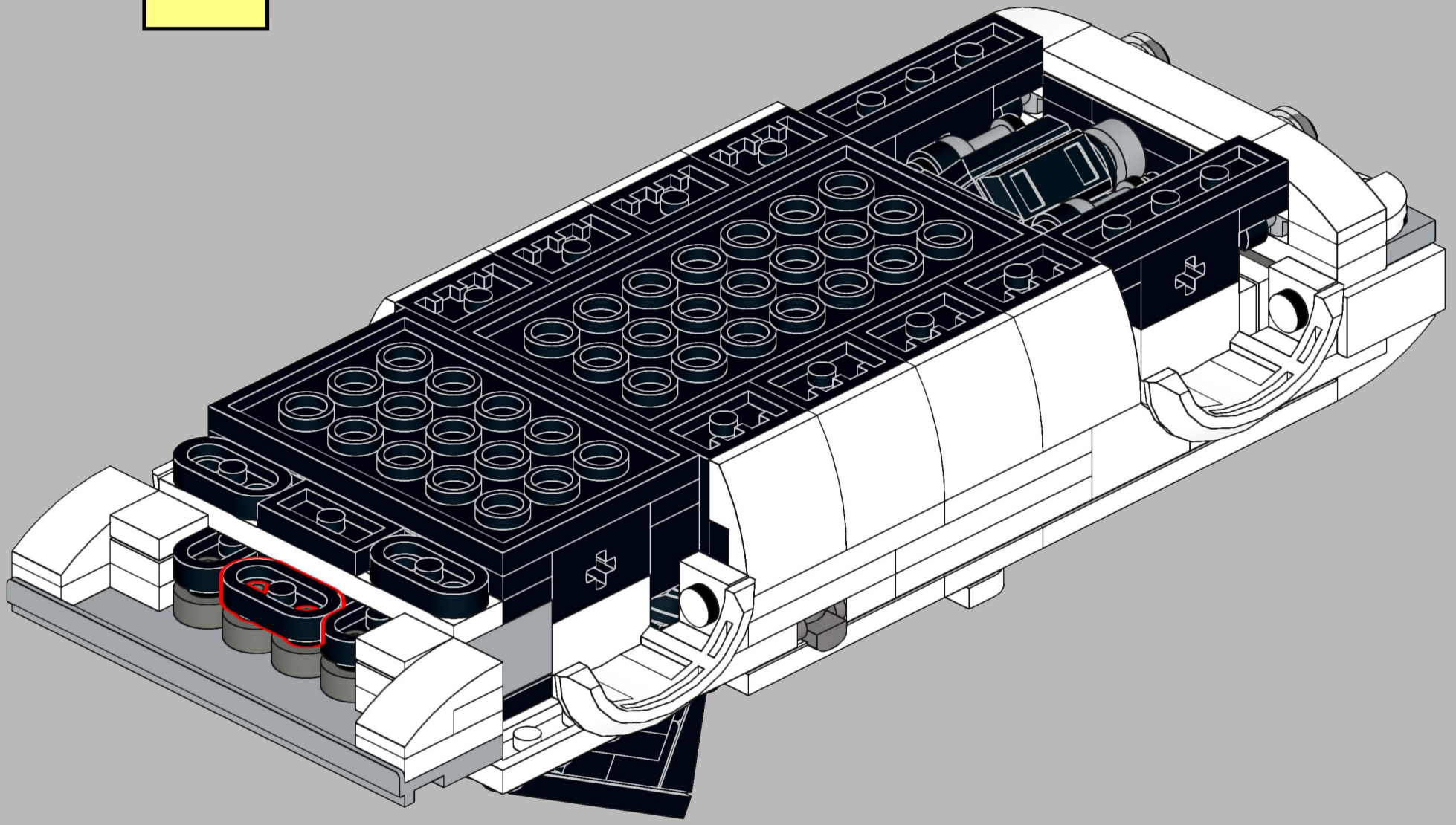

86

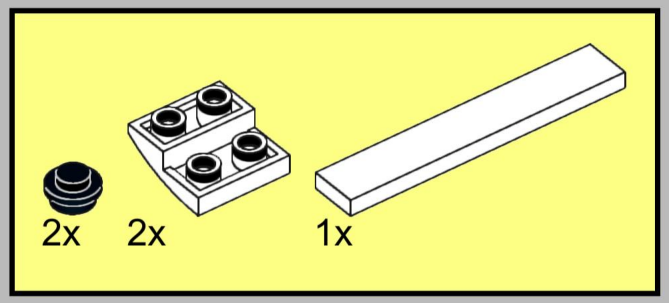

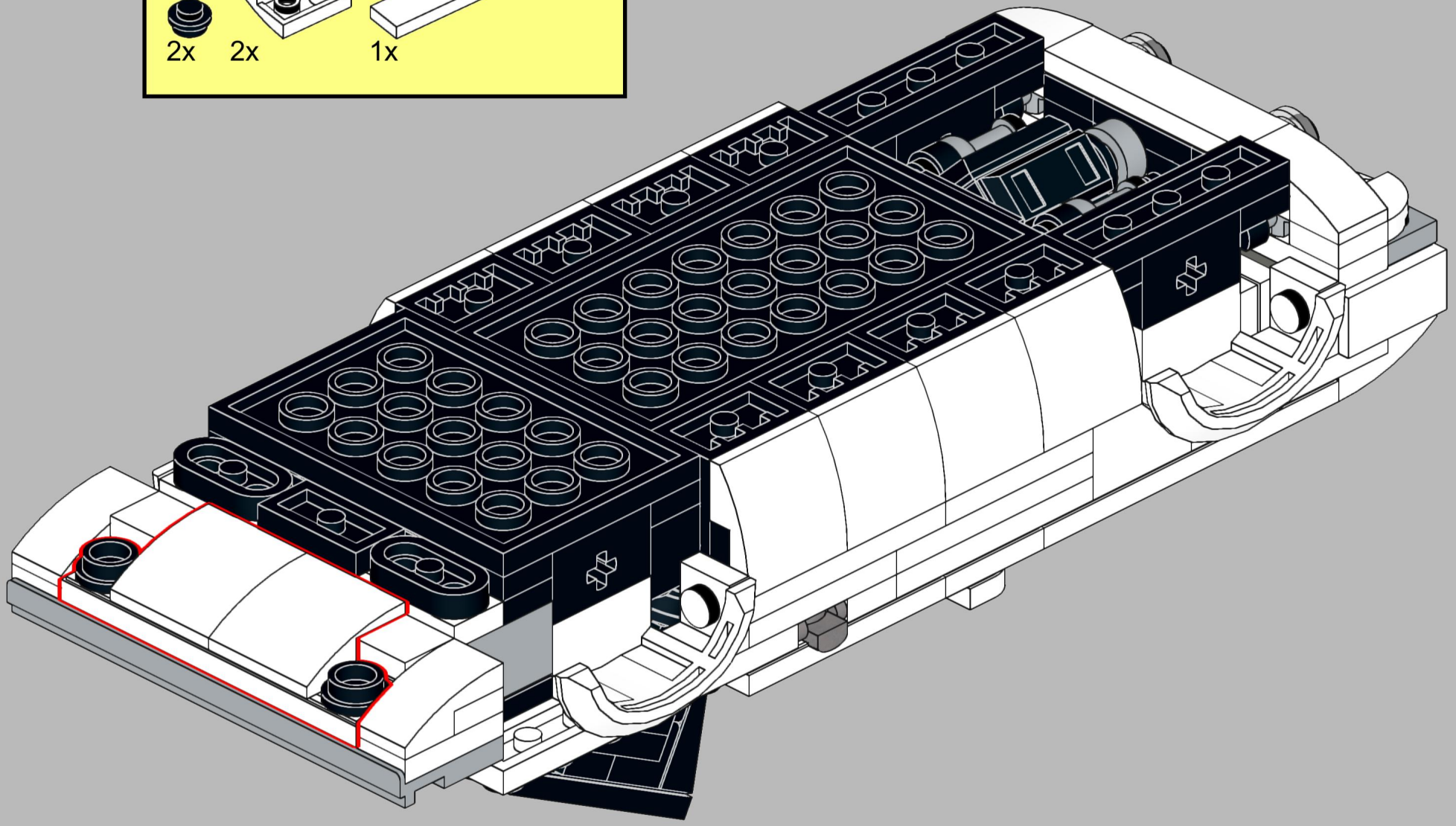

87



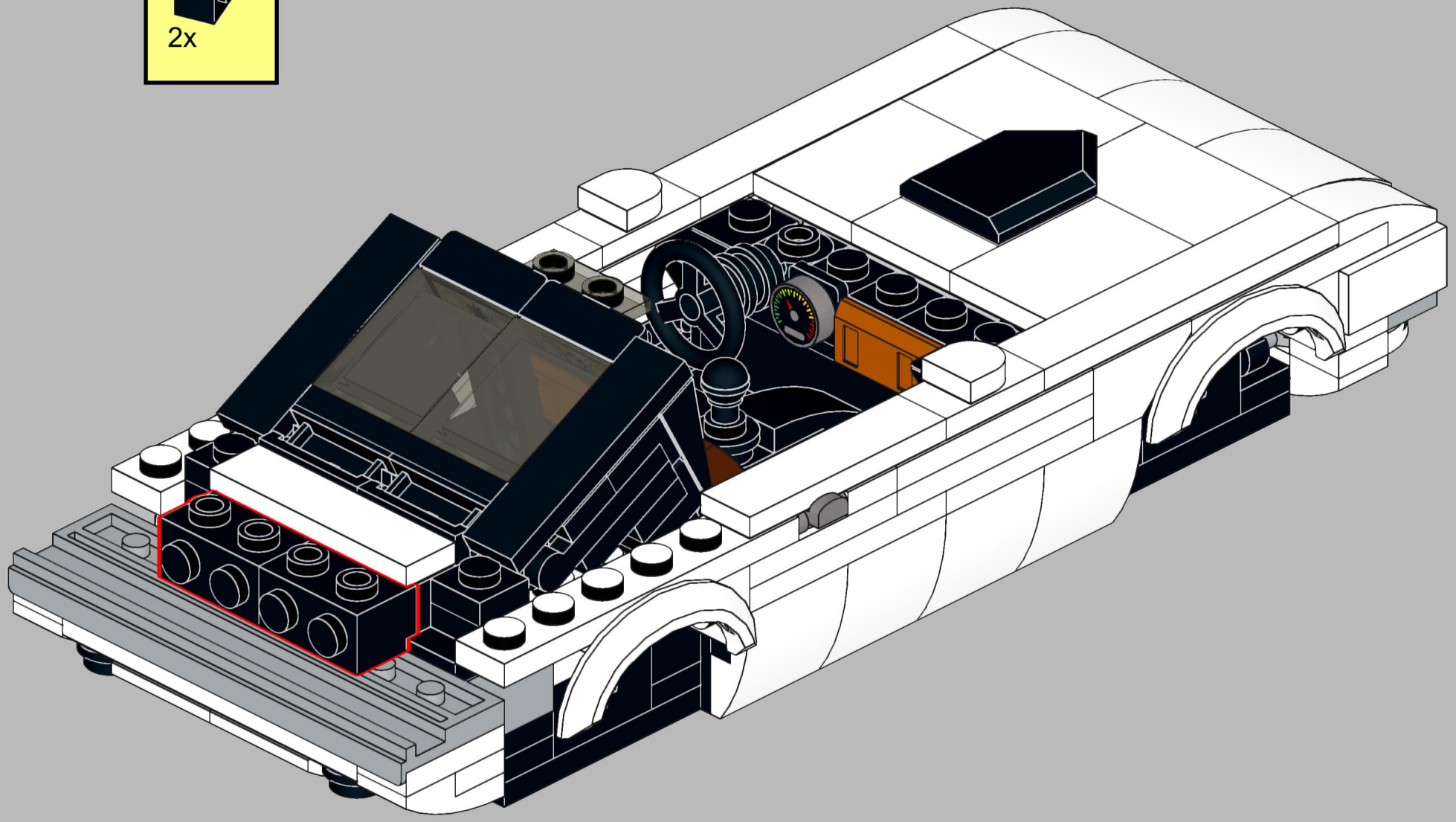

88

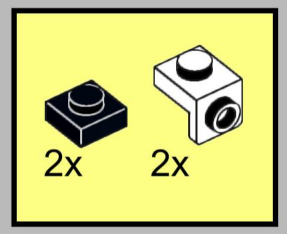

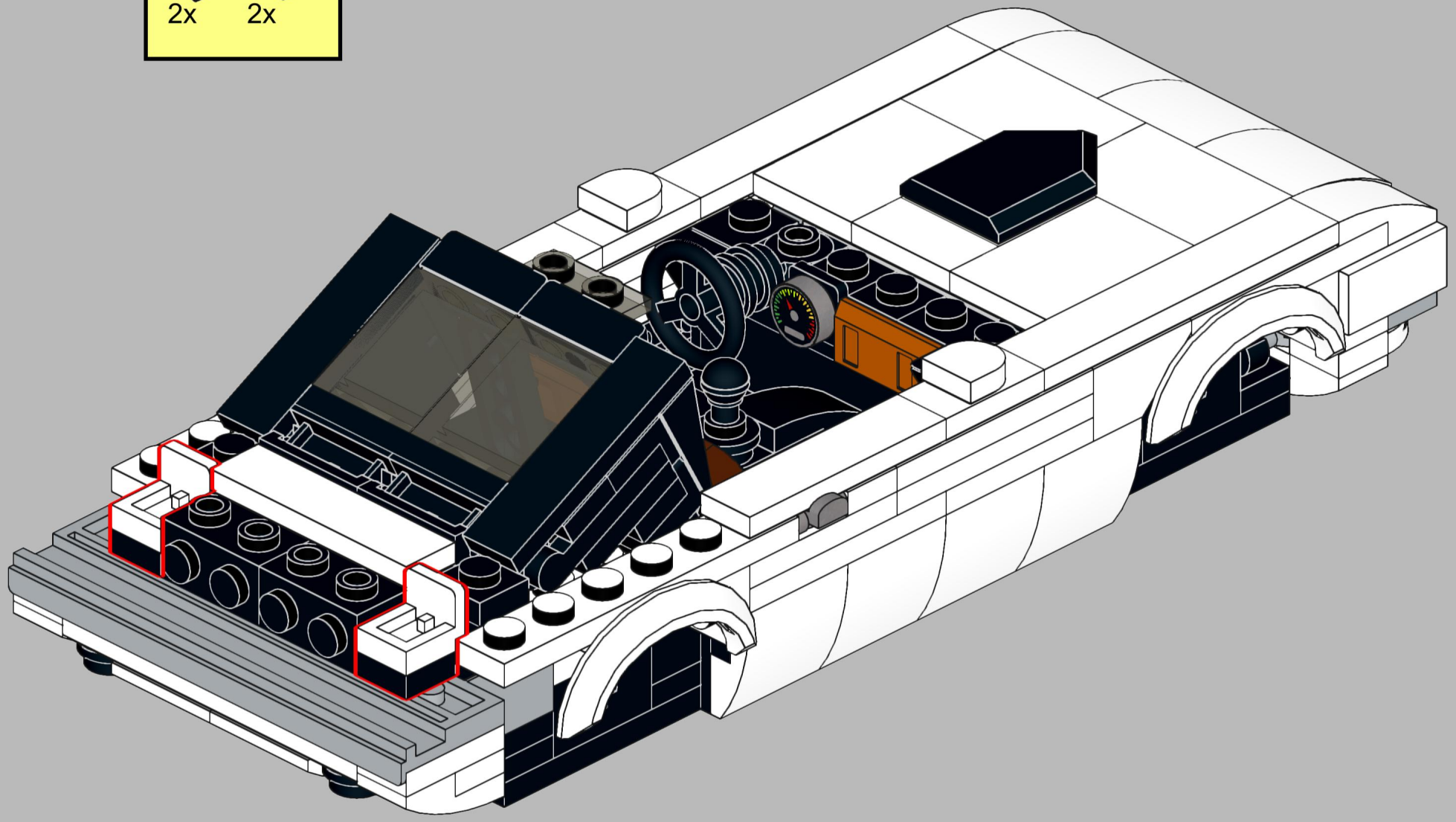

89

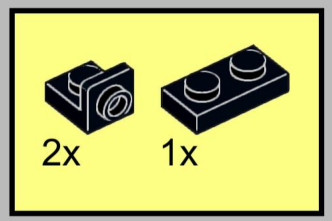

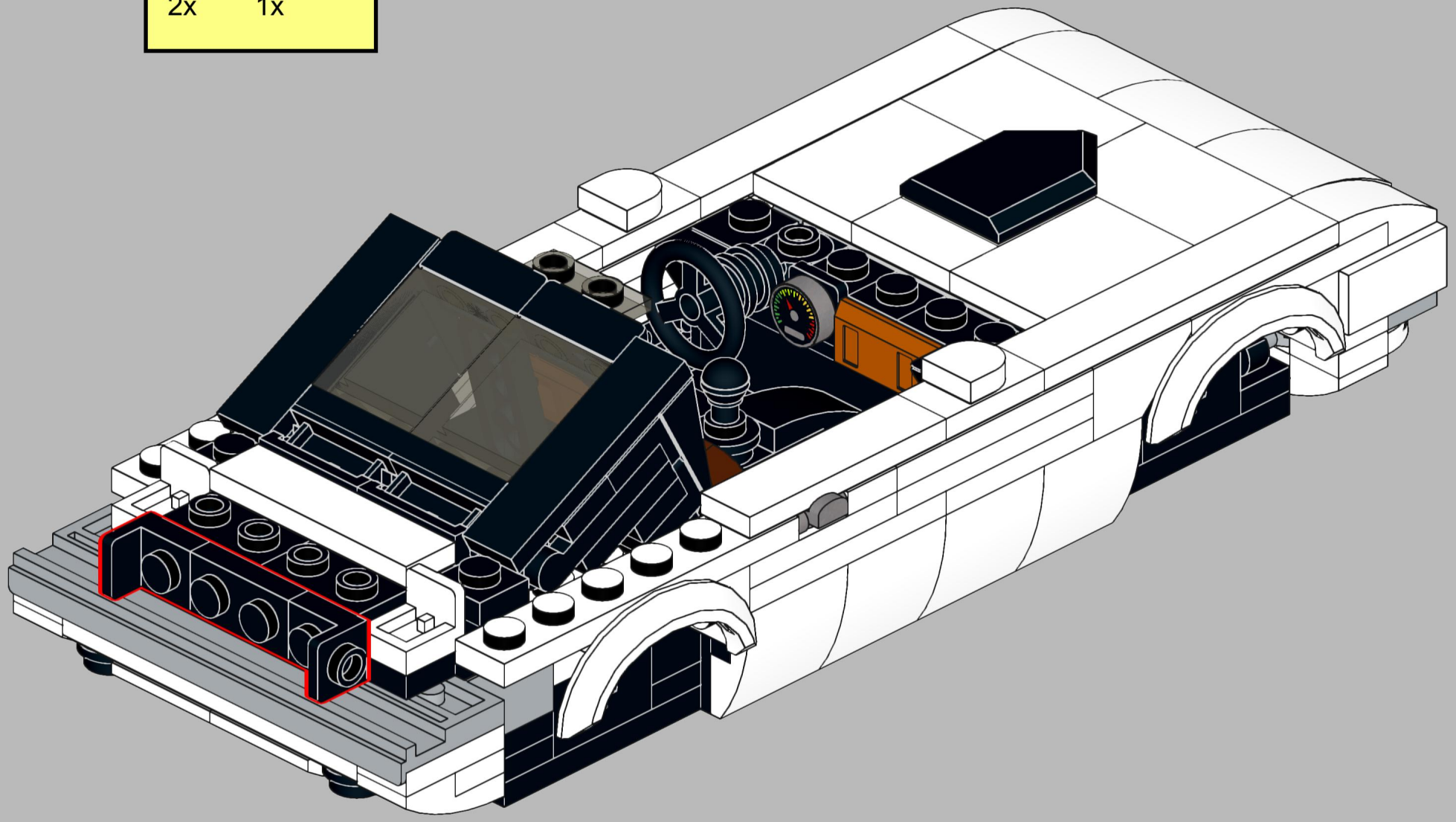

90

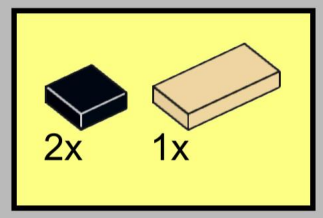

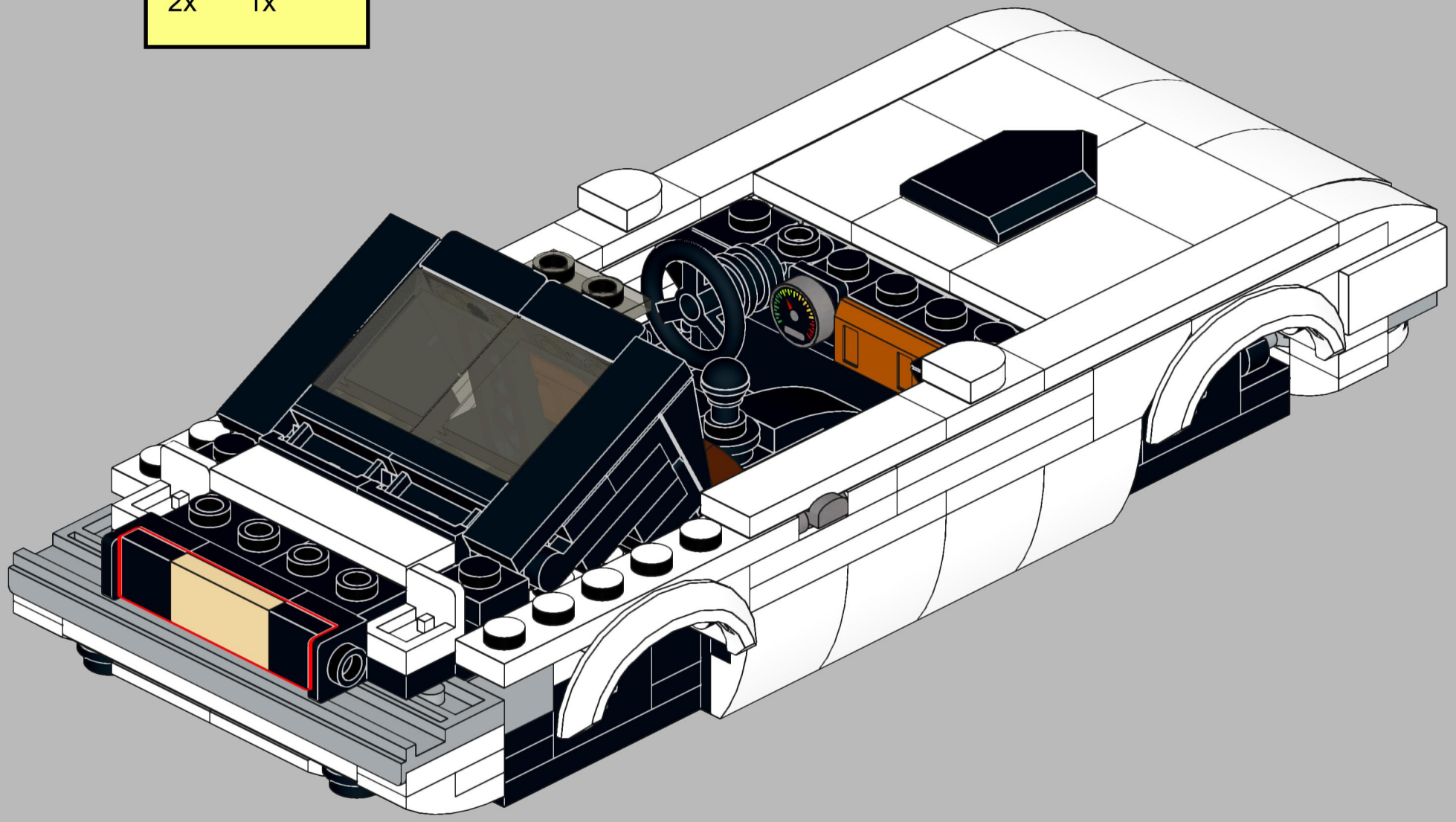

91

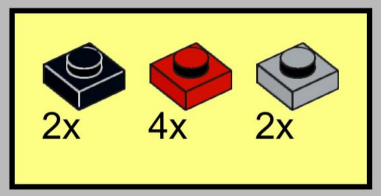

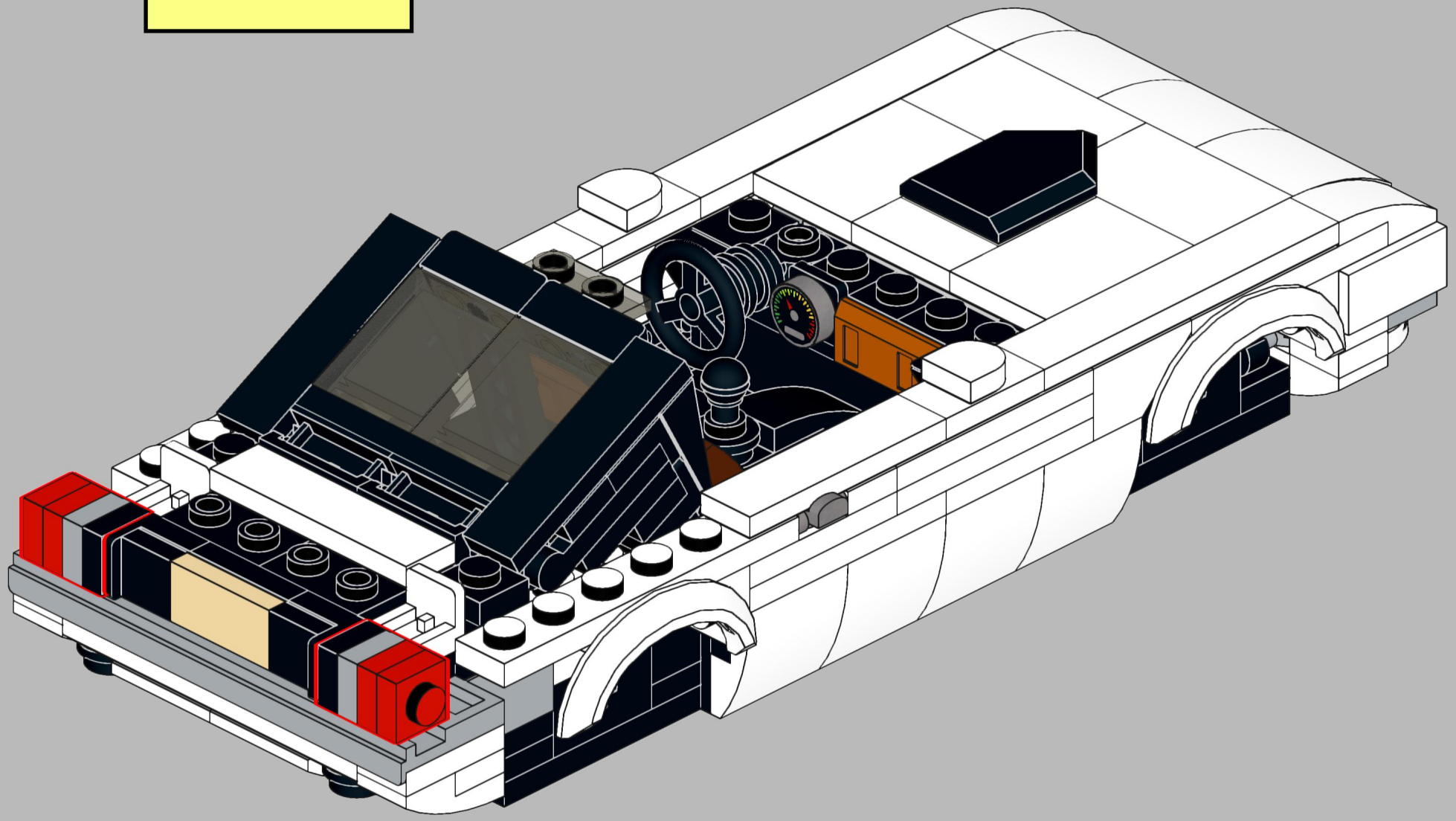

92

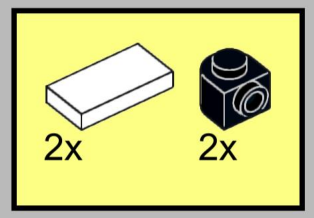

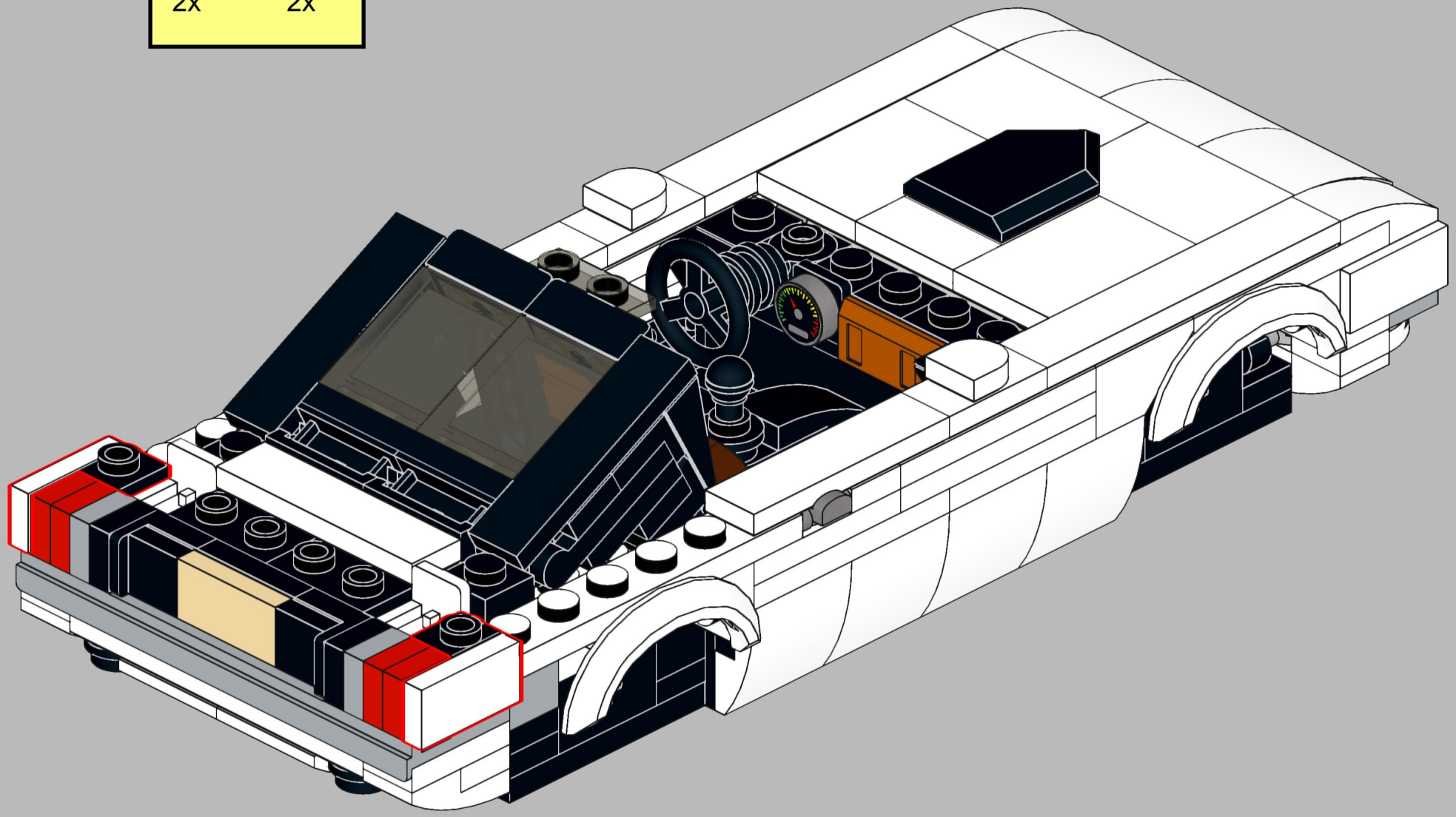

93

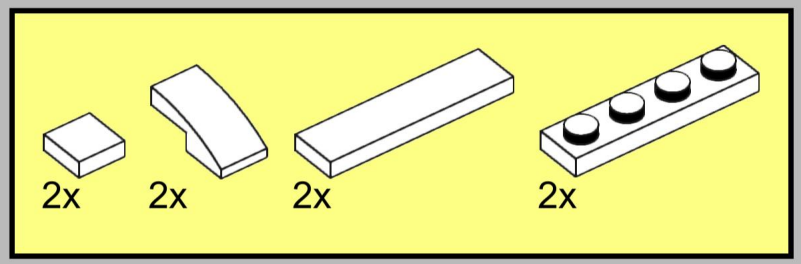

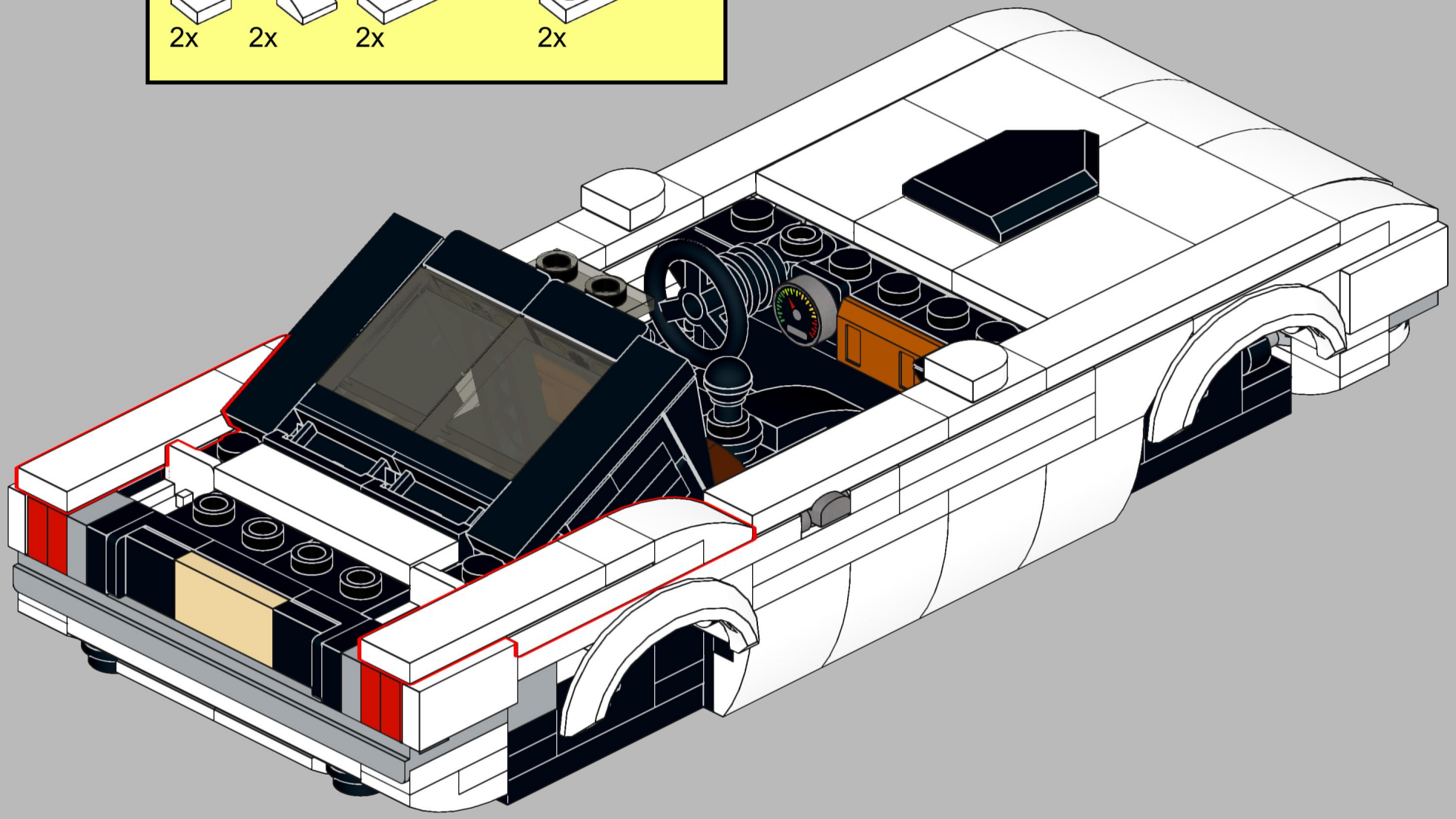

94

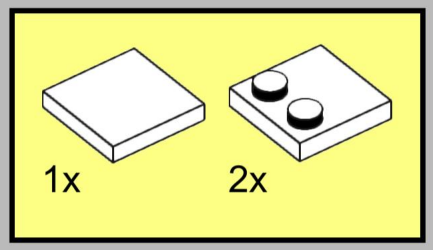

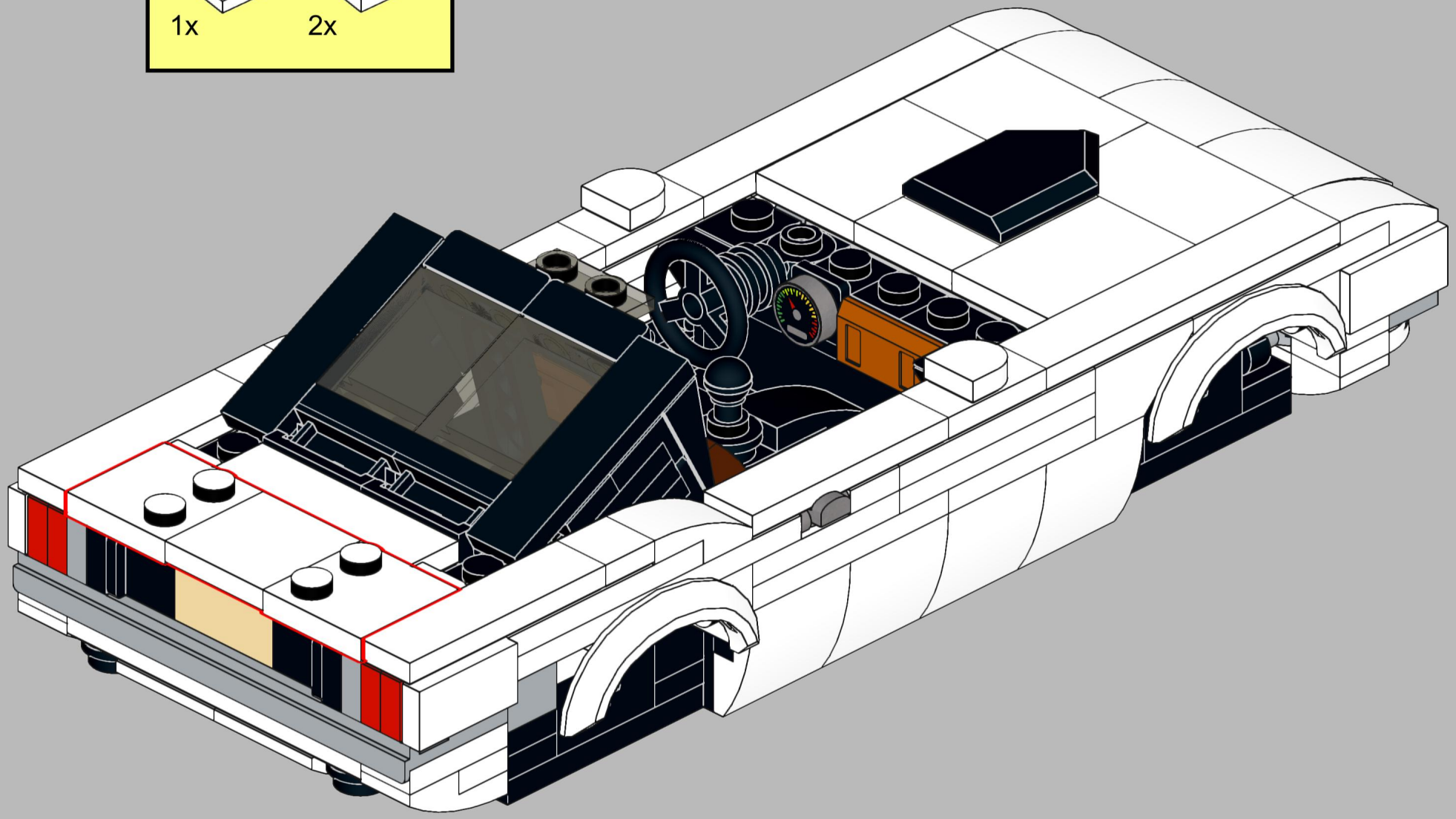

95

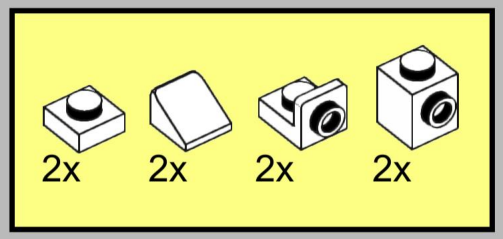

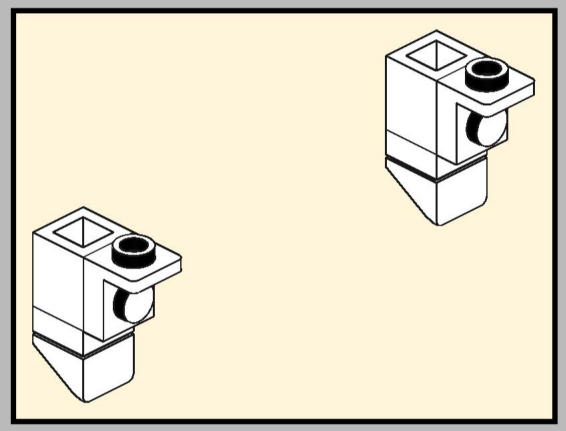

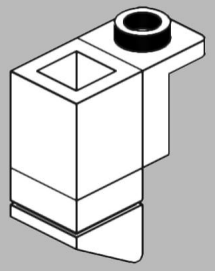

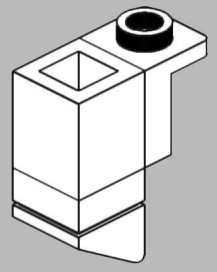

96

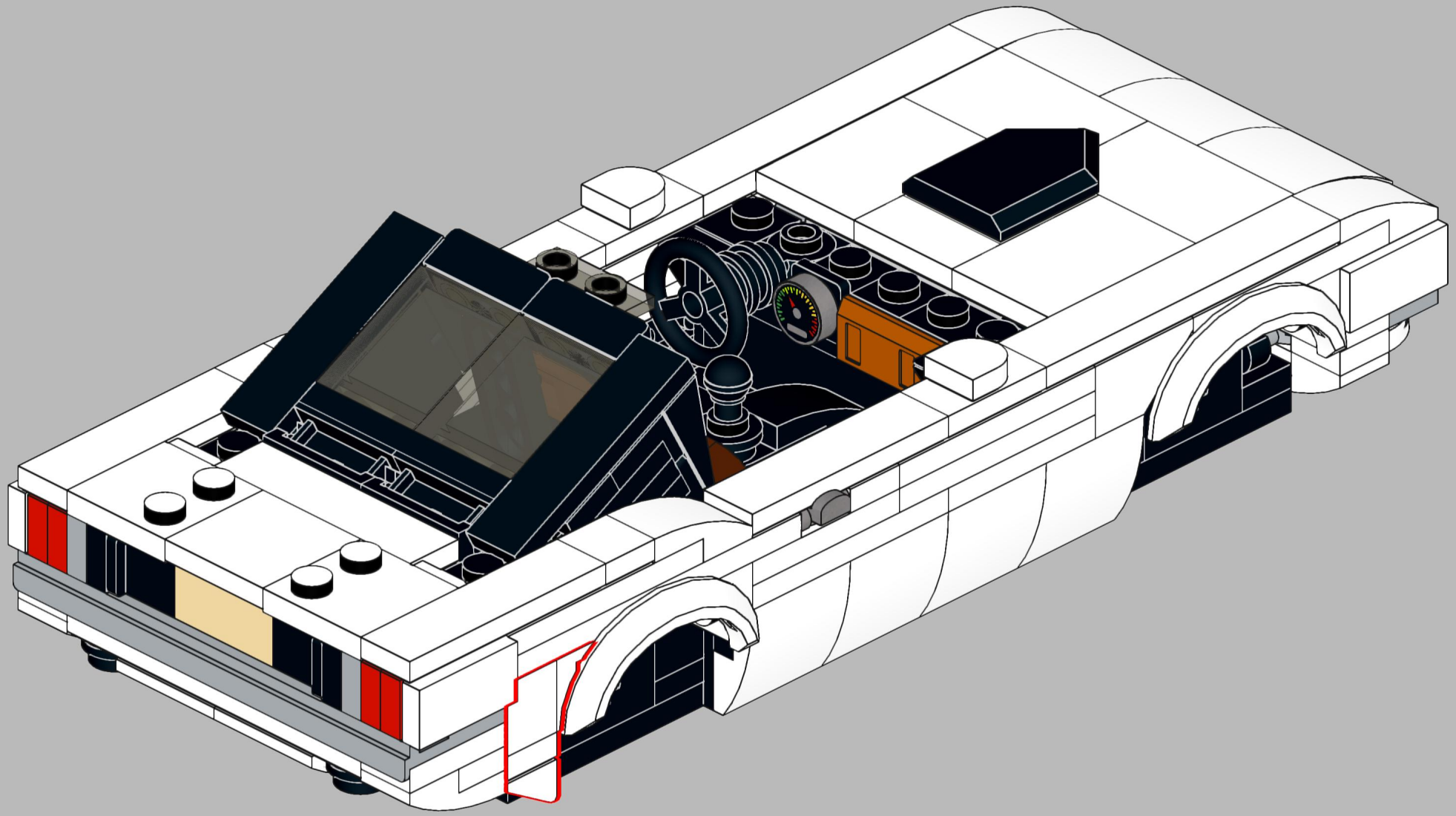

97

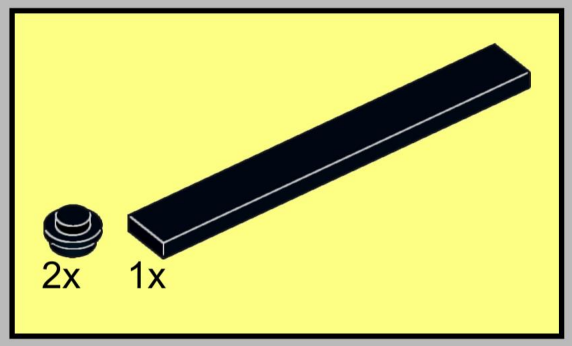

98

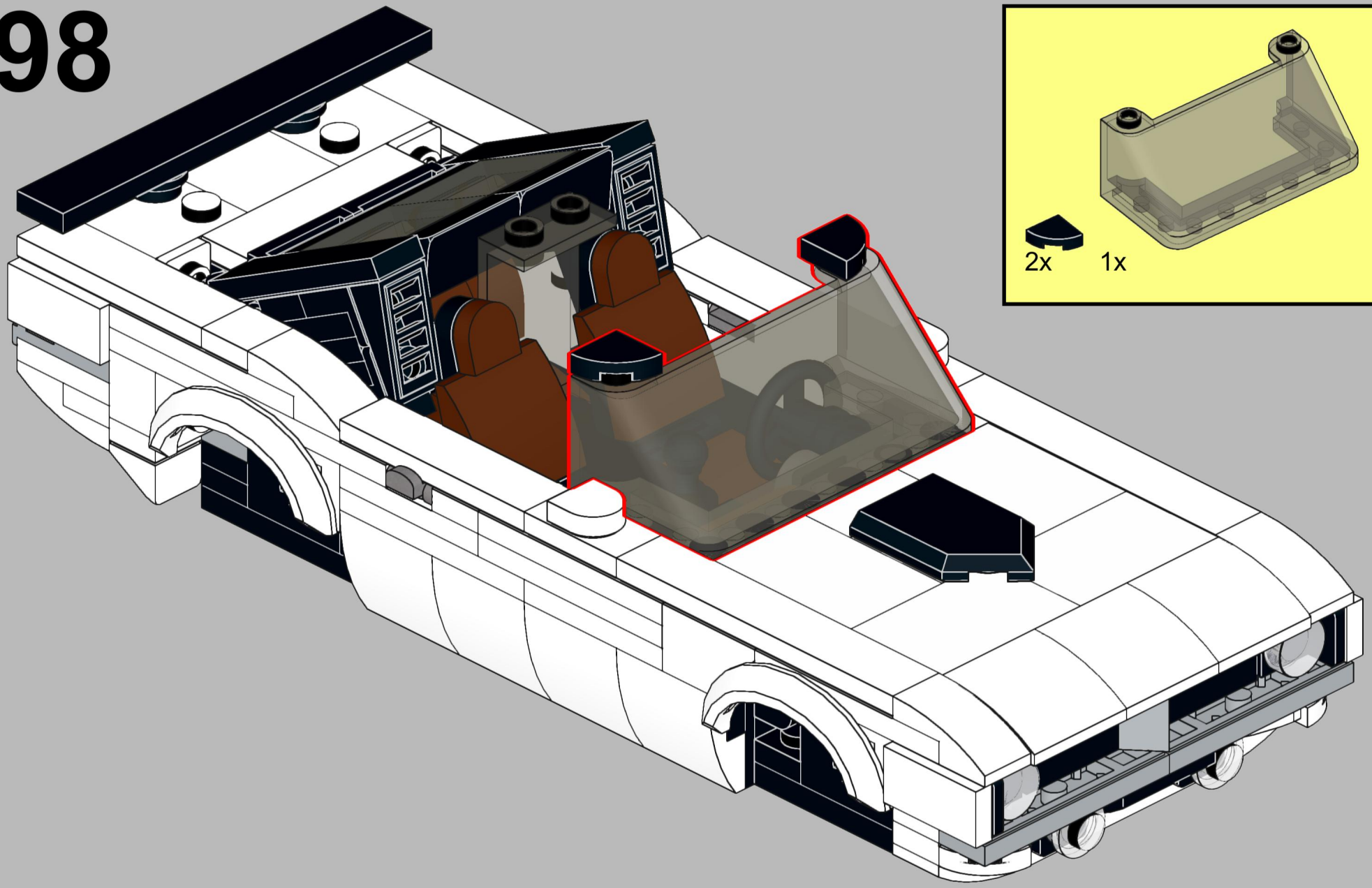

99

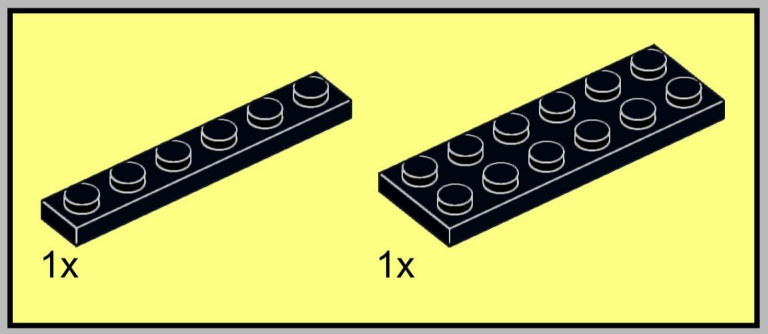

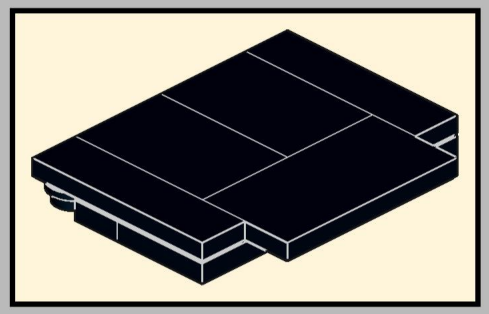

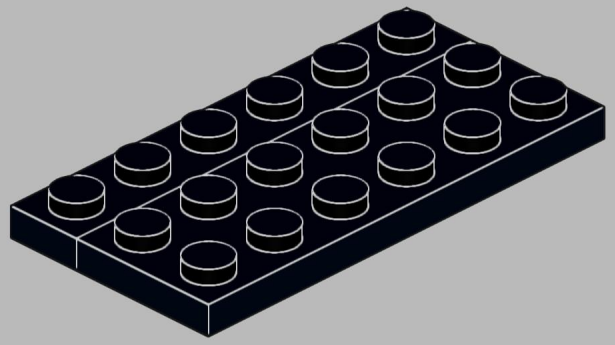

100

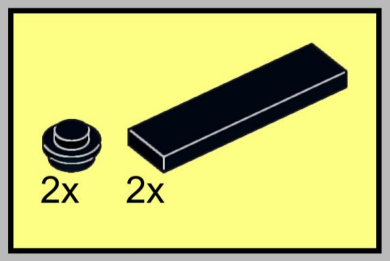

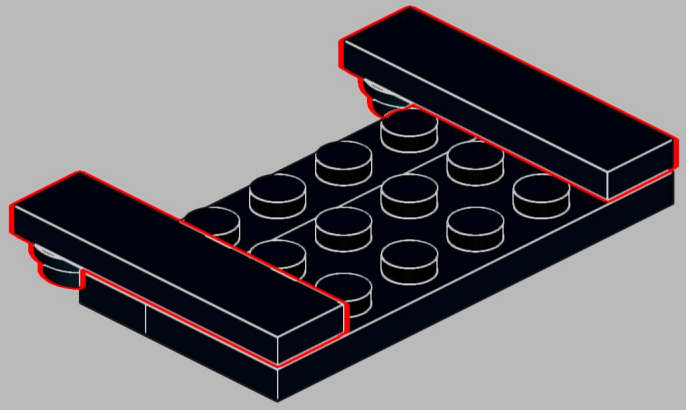

101

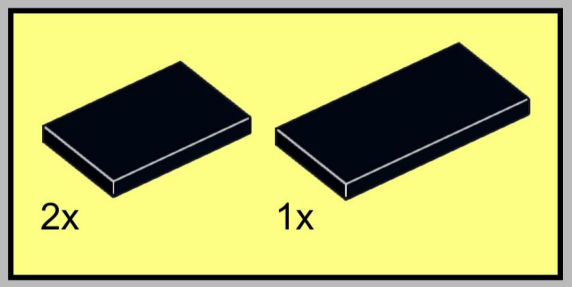

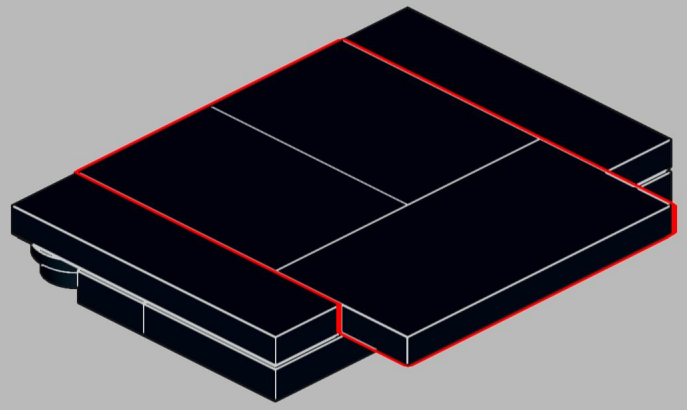

102

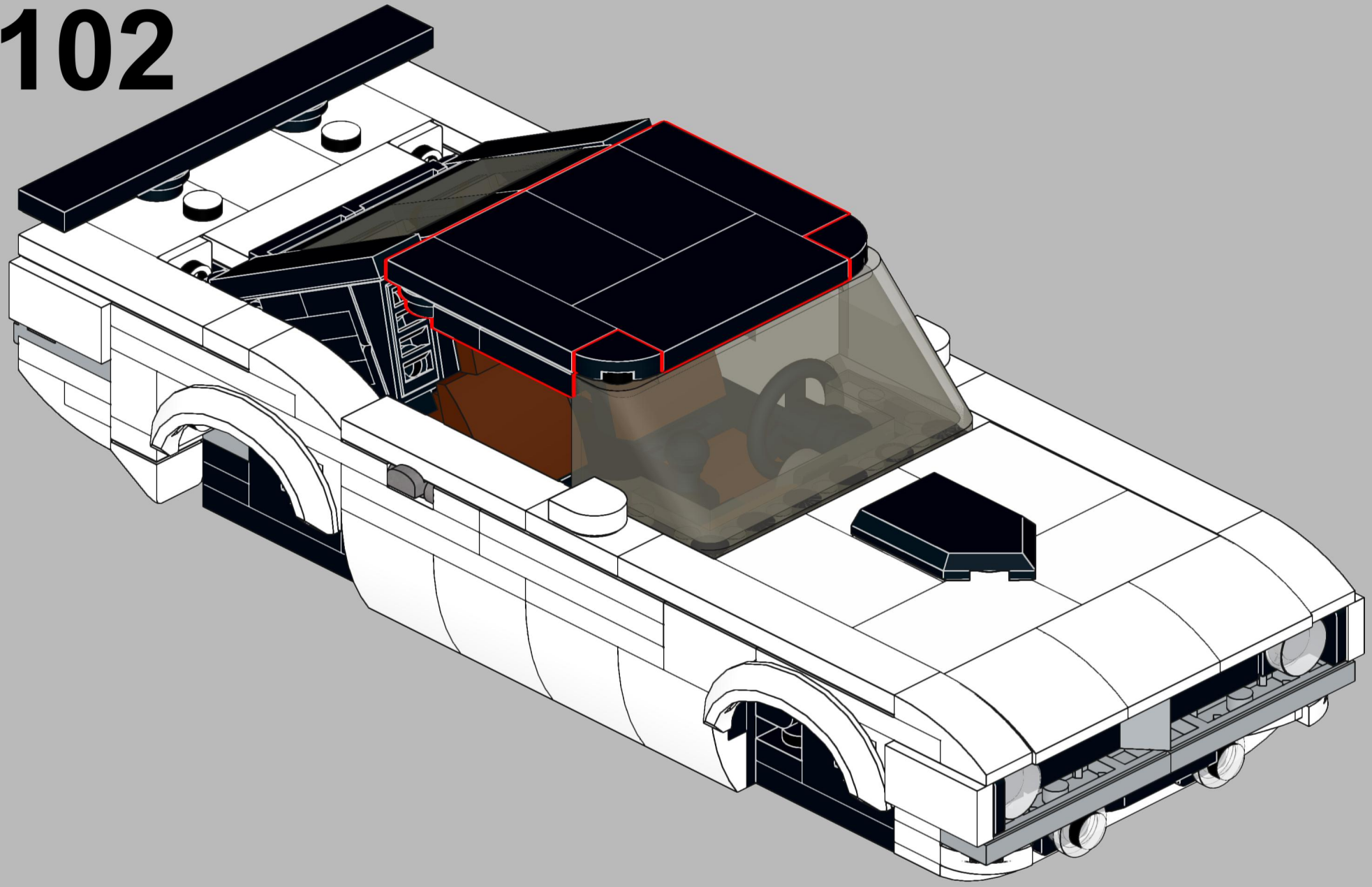

103

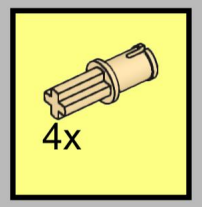

104

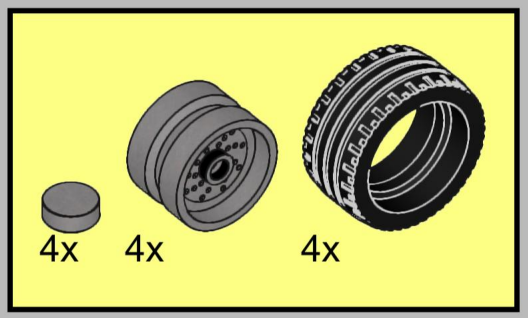

105


4x
3070
Black


2x
15712
Black


10x
36840
Black


3x
36841
Black

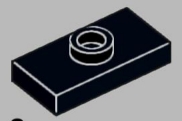
8x
15573
Black

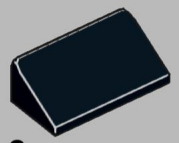
2x
85984
Black

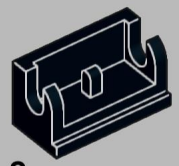
2x
3937
Black

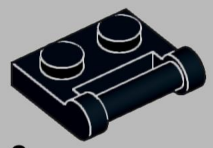
2x
48336
Black

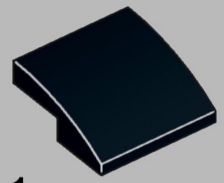
1x
15068
Black

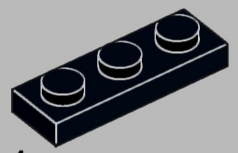
1x
3623
Black


2x
25269
Black


3x
3386
Black


2x
3005
Black


2x
4081b
Black

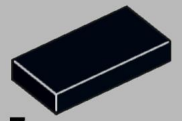
7x
3069
Black


2x
61409
Black

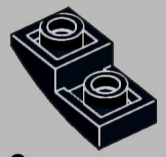
2x
24201
Black

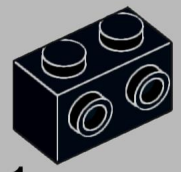
1x
11211
Black


1x
30663
Black

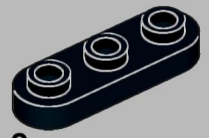
2x
77850
Black


22x
3024
Black


2x
11253
Black


3x
87087
Black


1x
32828
Black

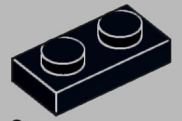
9x
3023
Black

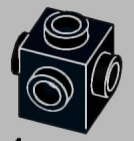
1x
4733
Black

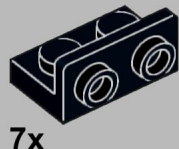
7x
99780
Black

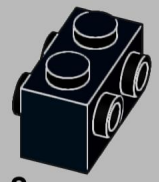
2x
52107
Black

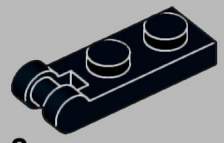
2x
60478
Black

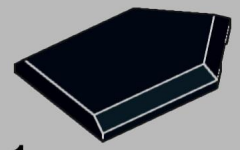
1x
22385
Black


8x
4073
Black


1x
90370
Black


2x
26047
Black

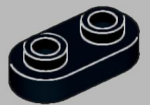
9x
35480
Black

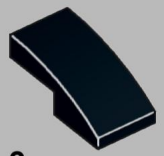
3x
11477
Black

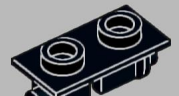
2x
3938
Black

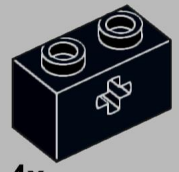
4x
32064
Black

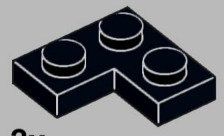
2x
2420
Black

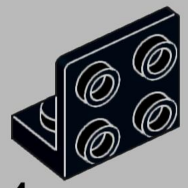
4x
99207
Black

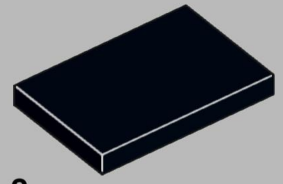
2x
26603
Black

4x
85861
Black

4x
4070
Black

2x
61252
Black

2x
99563
Black

2x
93609
Black

4x
44861
Black

1x
3004
Black

6x
34103
Black

5x
54200
Black

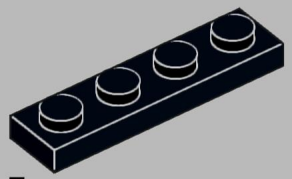

7x
3710
Black

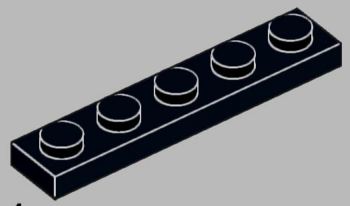

1x
78329
Black

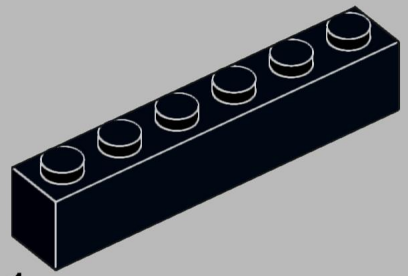

1x
3009
Black

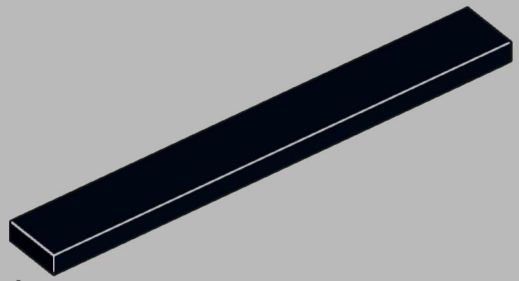

1x
4162
Black

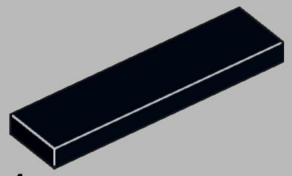

4x
2431
Black

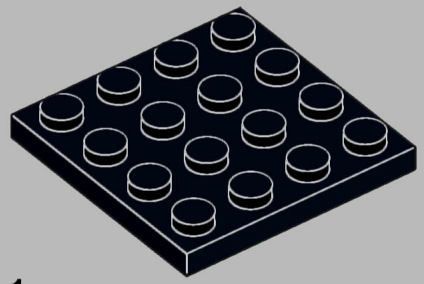

1x
3031
Black

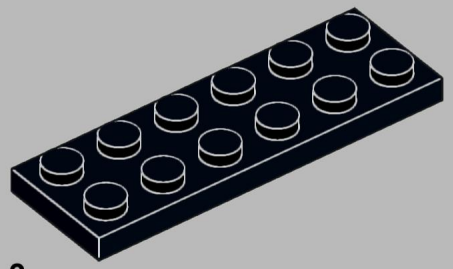

3x
3795
Black

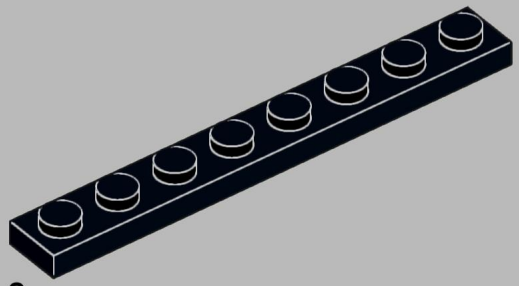

2x
3460
Black

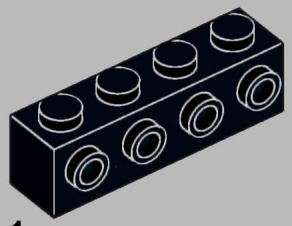

1x
30414
Black

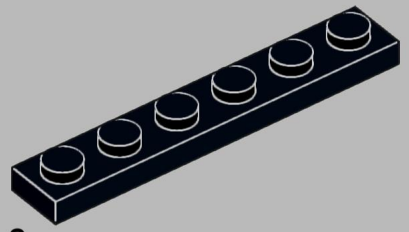

2x
3666
Black

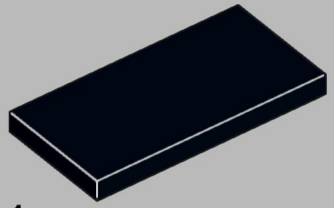

1x
87079
Black

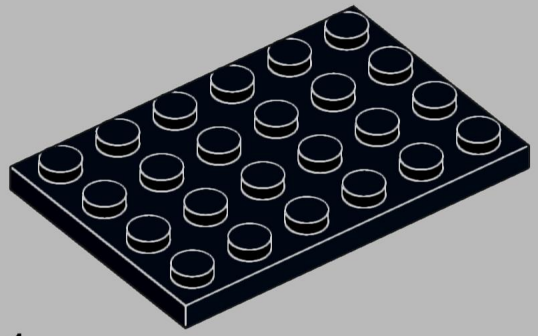

1x
3032
Black

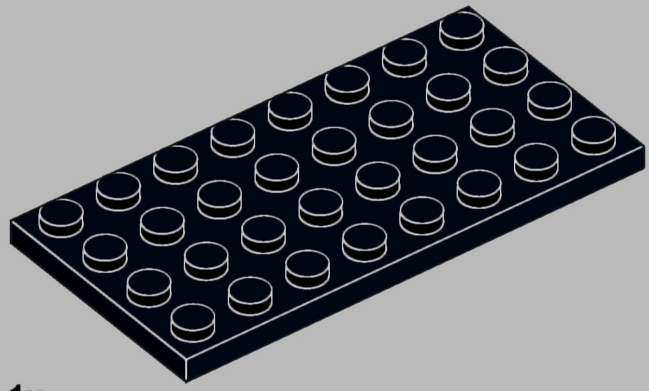

1x
3035
Black

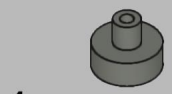

4x
20482
Dark Bluish Gray

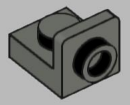

2x
36840
Dark Bluish Gray

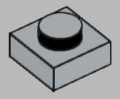

3x
3024
Light Bluish Gray



1x
20482
Light Bluish Gray

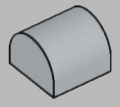

1x
49307
Light Bluish Gray



1x
35464
Light Bluish Gray

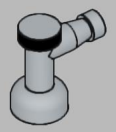

2x
4599b
Light Bluish Gray



2x
26604
Light Bluish Gray

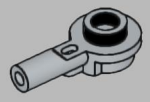

4x
32828
Light Bluish Gray

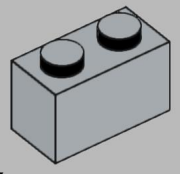

2x
3004
Light Bluish Gray

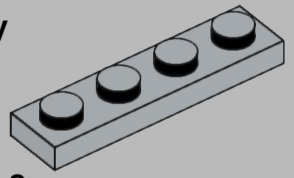

2x
3710
Light Bluish Gray

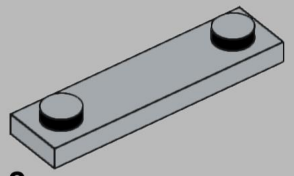

2x
41740
Light Bluish Gray

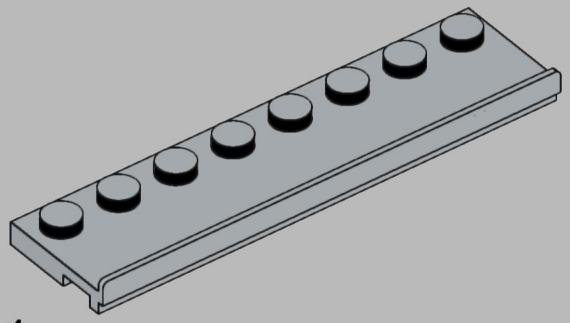

1x
30586
Light Bluish Gray



2x
25269
White



2x
24246
White



6x
3070
White



8x
3024
White



2x
54200
White



6x
36840
White

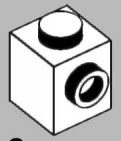

2x
87087
White

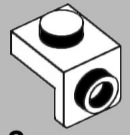

2x
36841
White

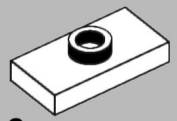

2x
15573
White

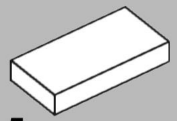

5x
3069
White

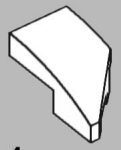

1x
29120
White

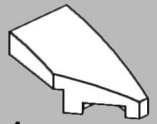

1x
29119
White

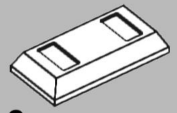

2x
99563
White

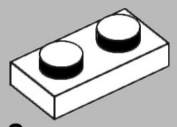

2x
3023
White

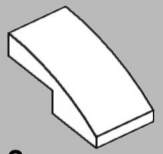

8x
11477
White

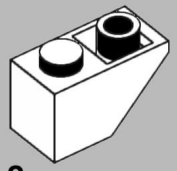

2x
3665
White

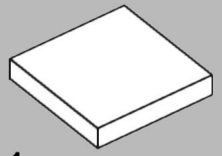

1x
3068
White

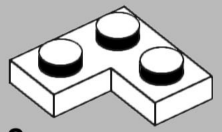

2x
2420
White

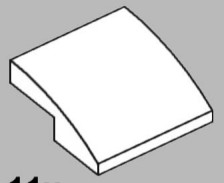

11x
15068
White

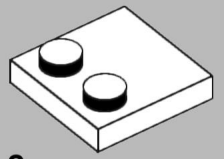

2x
33909
White

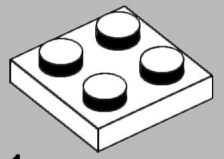

1x
3022
White

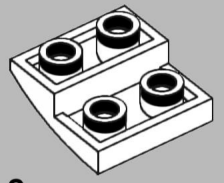

2x
32803
White

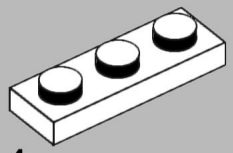

4x
3623
White

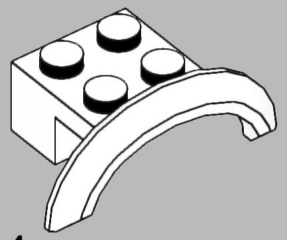

4x
98282
White

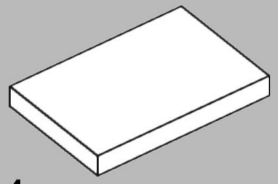

4x
26603
White

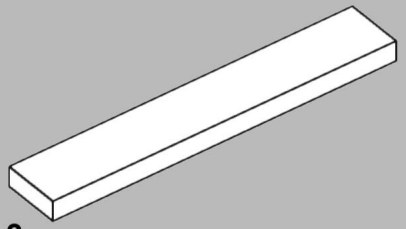

3x
6636
White

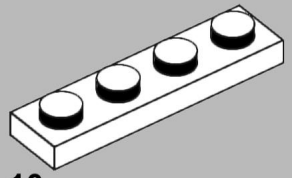

10x
3710
White

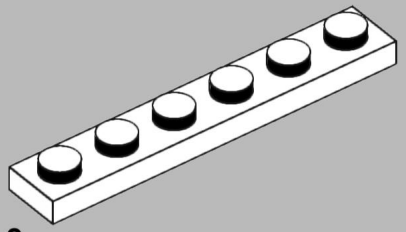

3x
3666
White

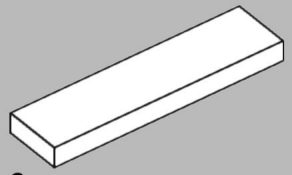

6x
2431
White

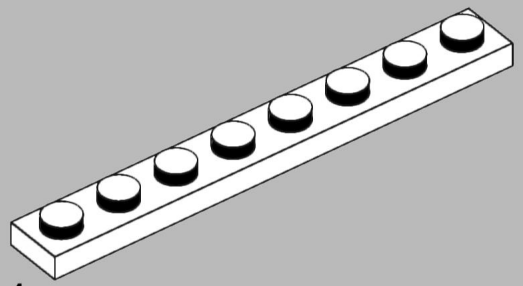

1x
3460
White

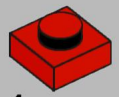

4x
3024
Red

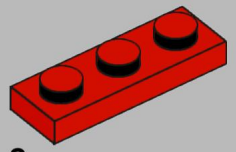

2x
3623
Red



2x
24246
Reddish Brown

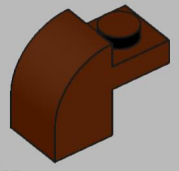

4x
6091
Reddish Brown

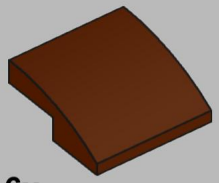

6x
15068
Reddish Brown

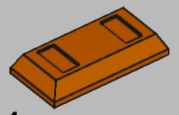

1x
99563
Dark Orange

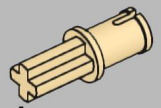

4x
3749
Tan

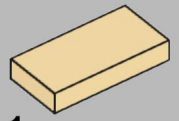

1x
3069
Tan

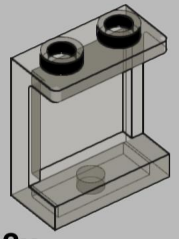

2x
87552
Trans-Brown

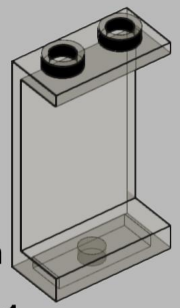

1x
2362b
Trans-Brown

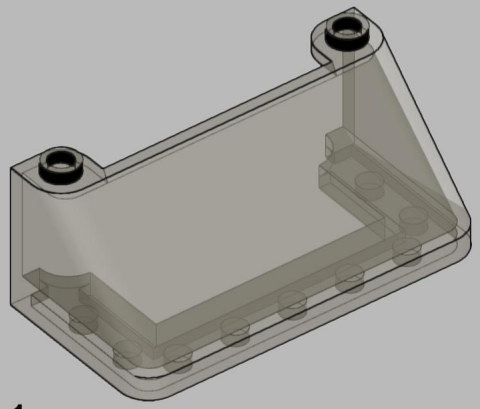

1x
92583
Trans-Brown



2x
98138
Trans-Clear

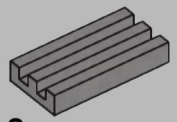

2x
2412b
Flat Silver



2x
4073
Trans-Clear

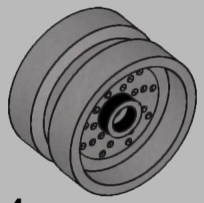

4x
66727
Flat Silver



2x
24246
Flat Silver



1x
98138pb010
Flat Silver



4x
18977
Rubber Black



4x
98138
Flat Silver

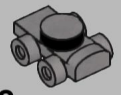

2x
11253
Flat Silver