1

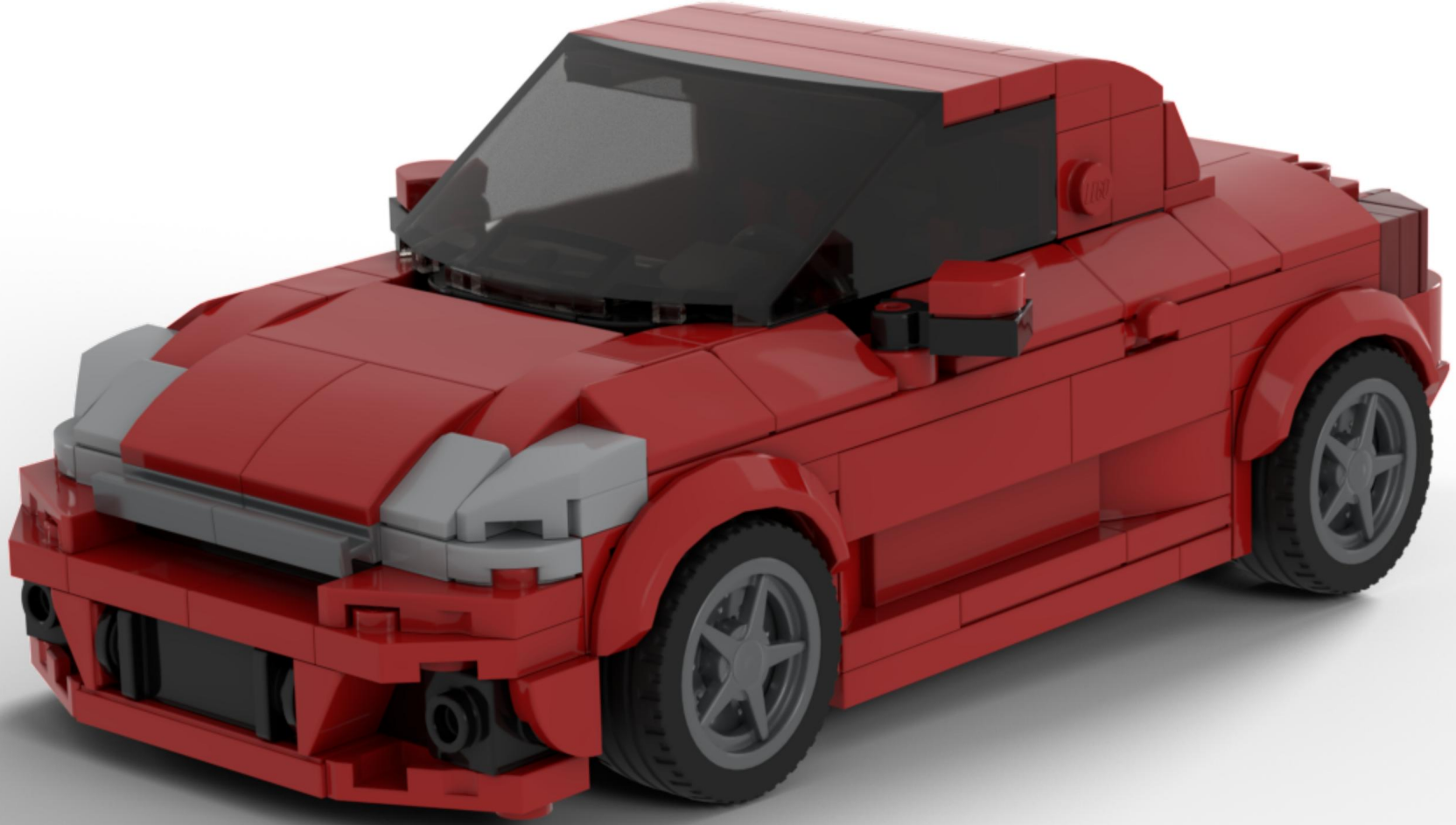

2

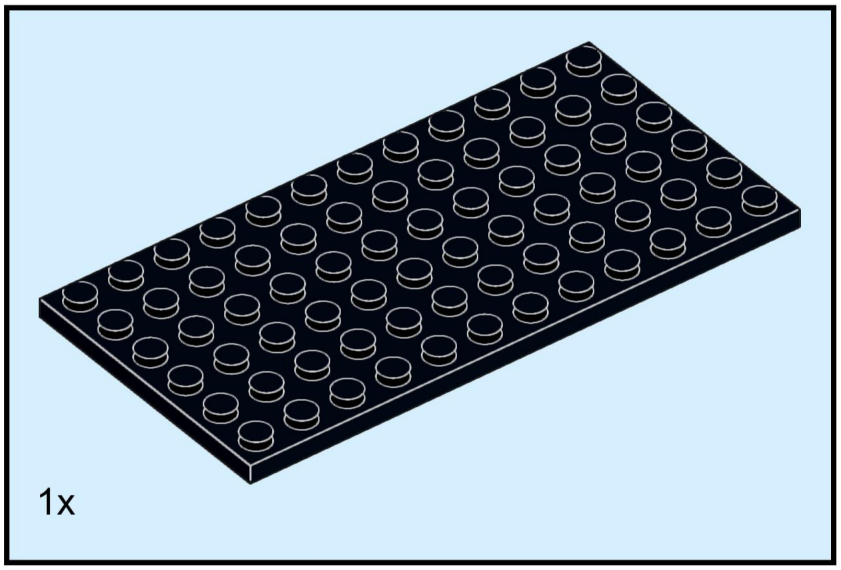

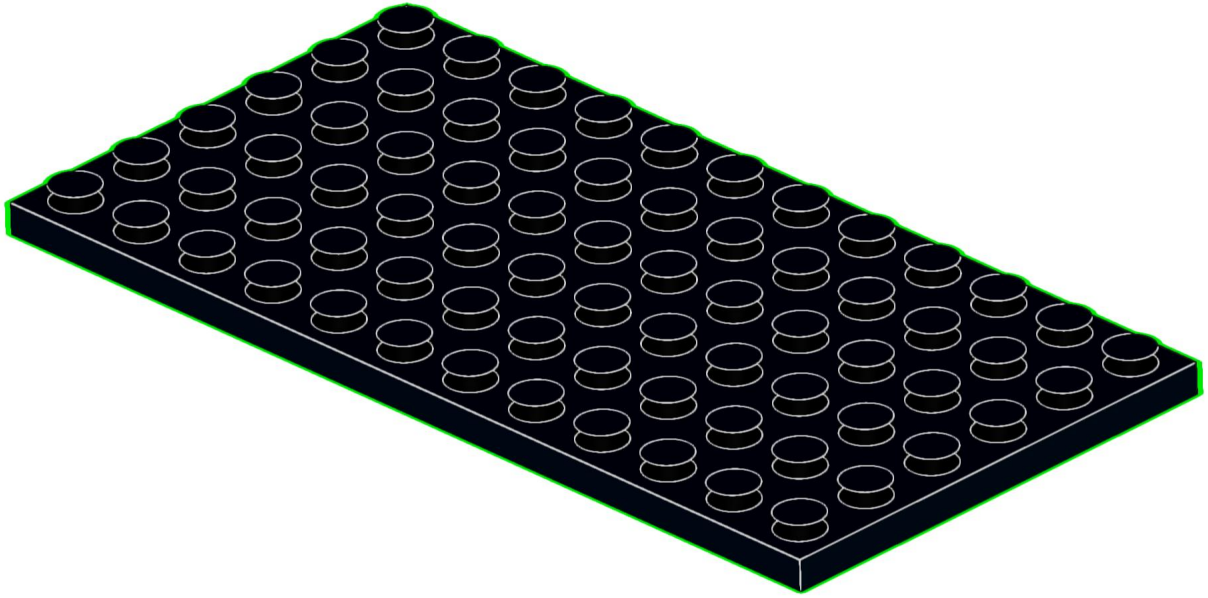

3

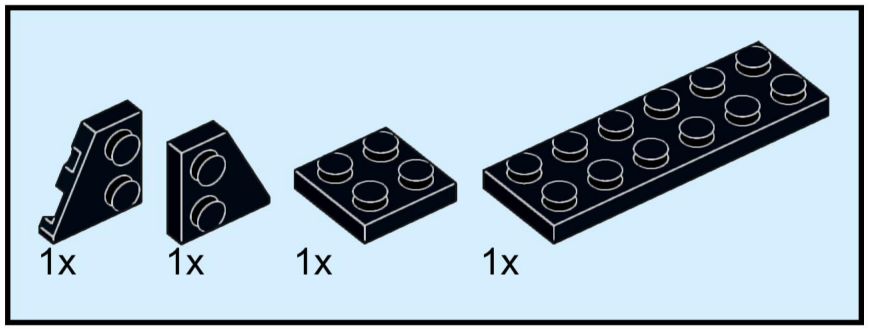

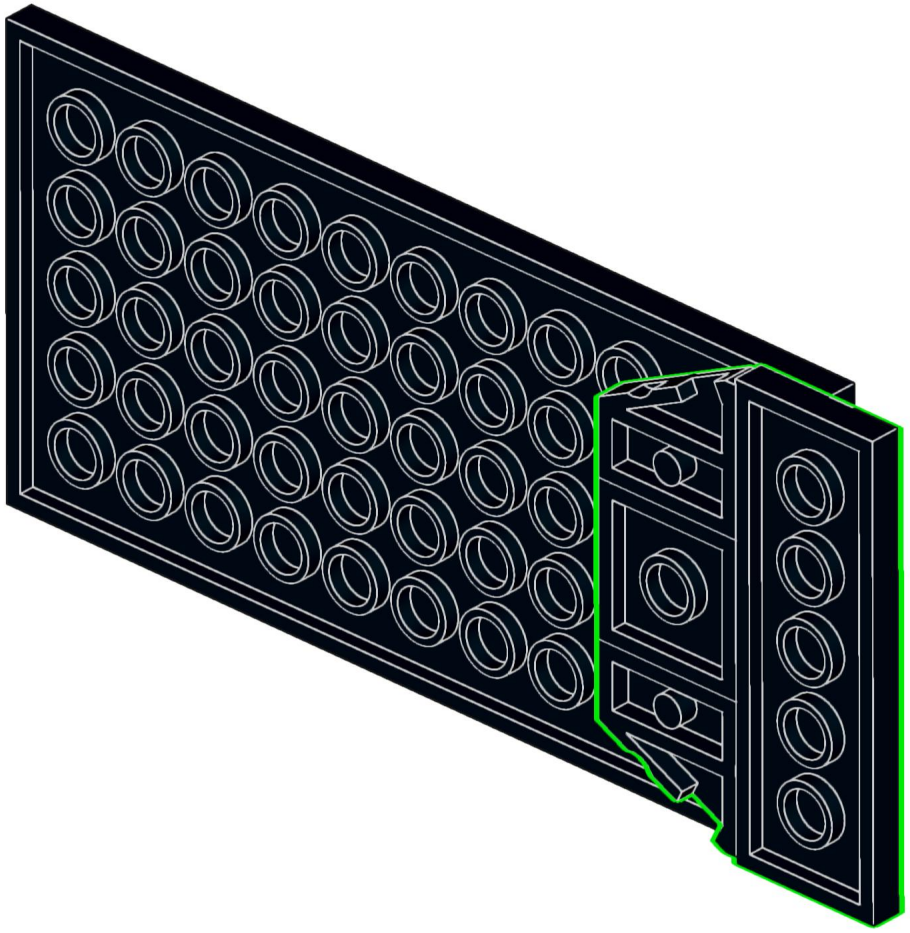

4

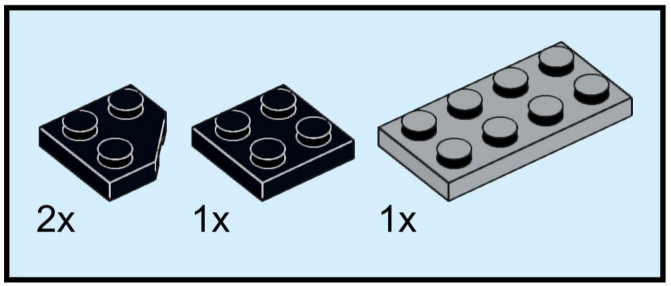

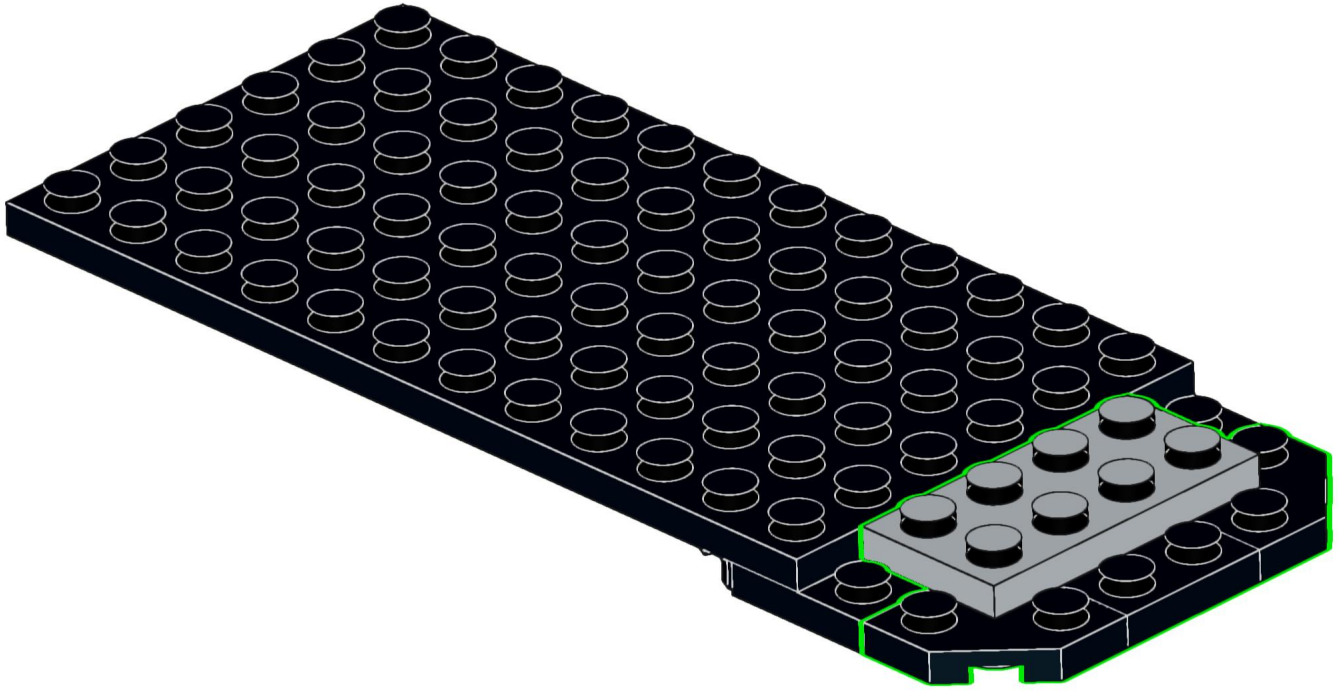

5

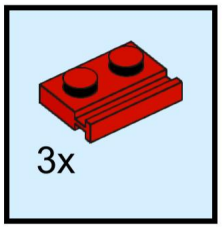

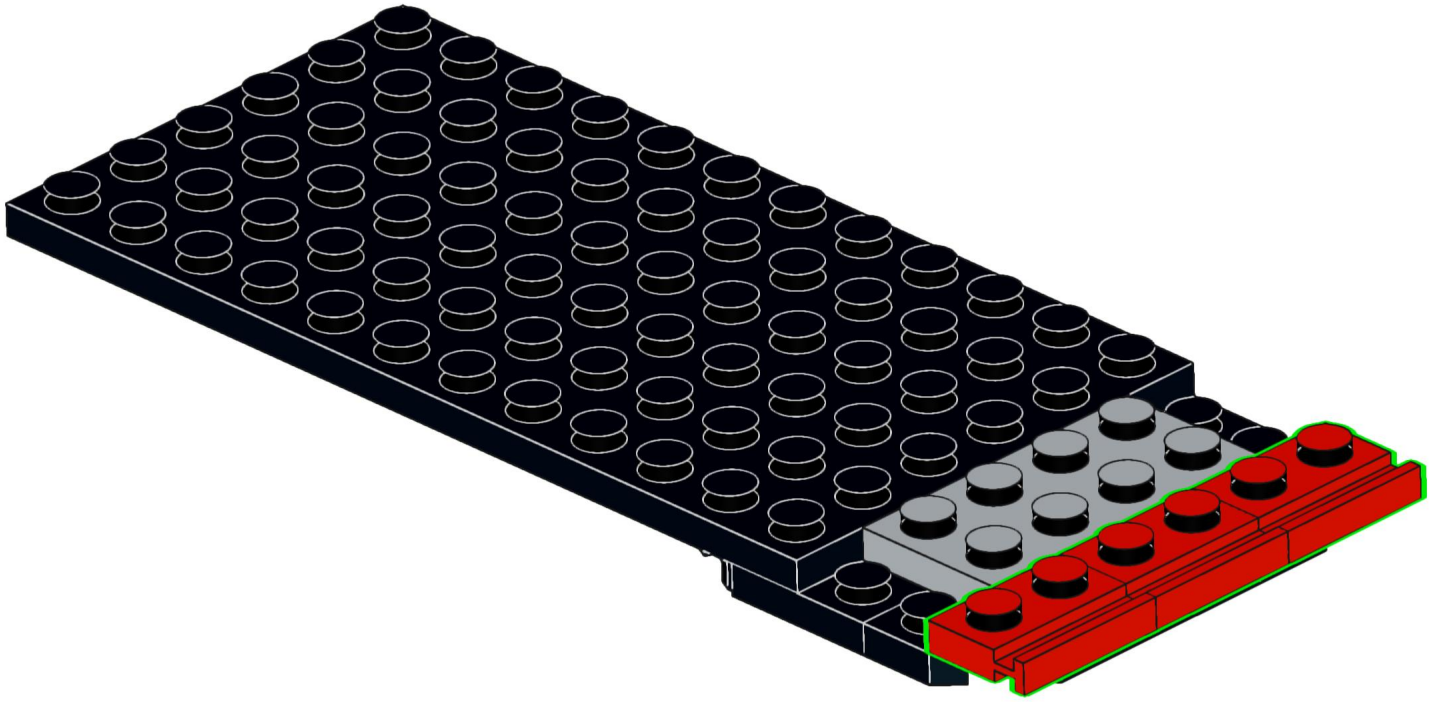

6

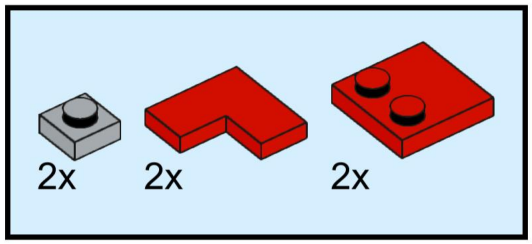

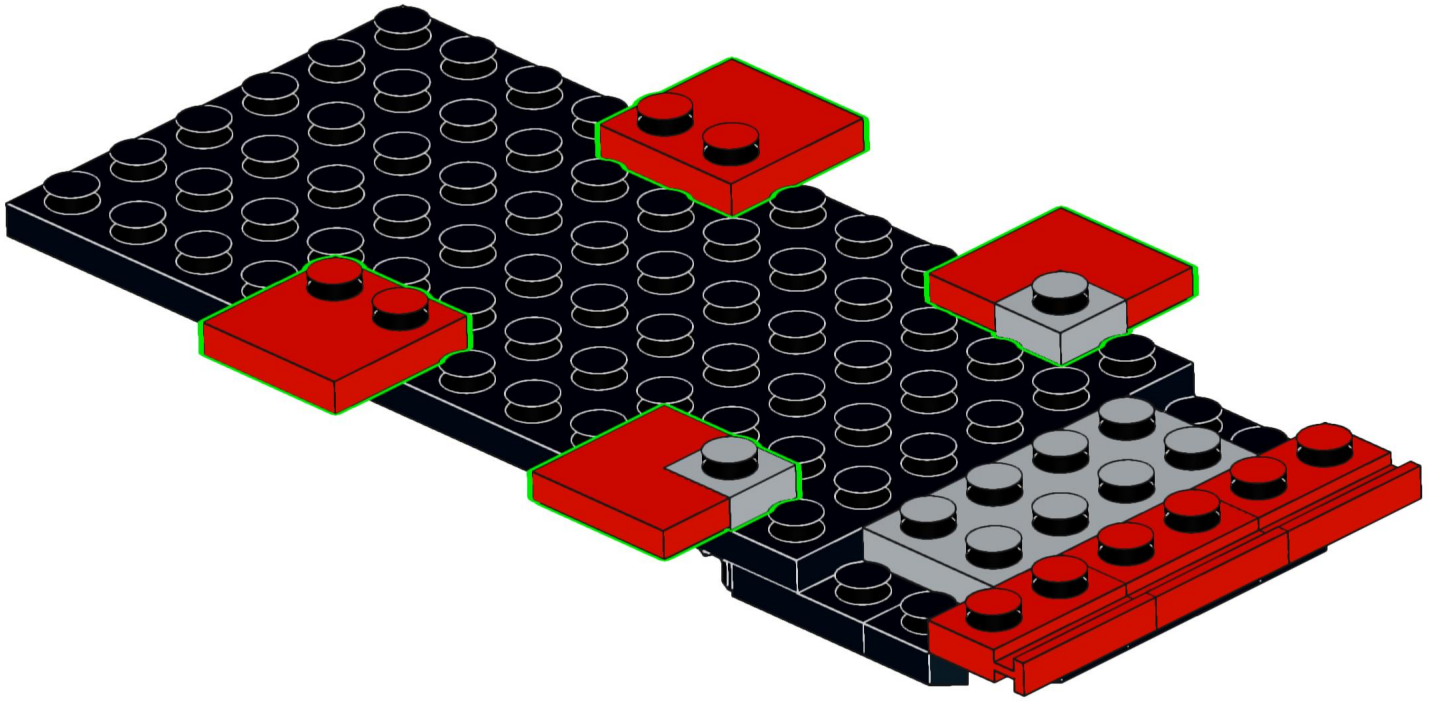

7

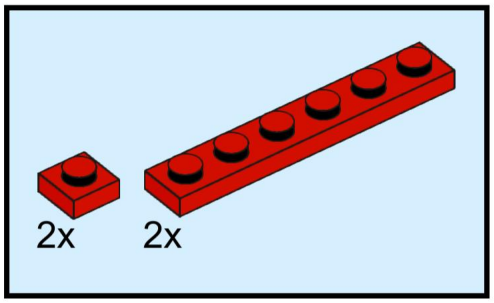

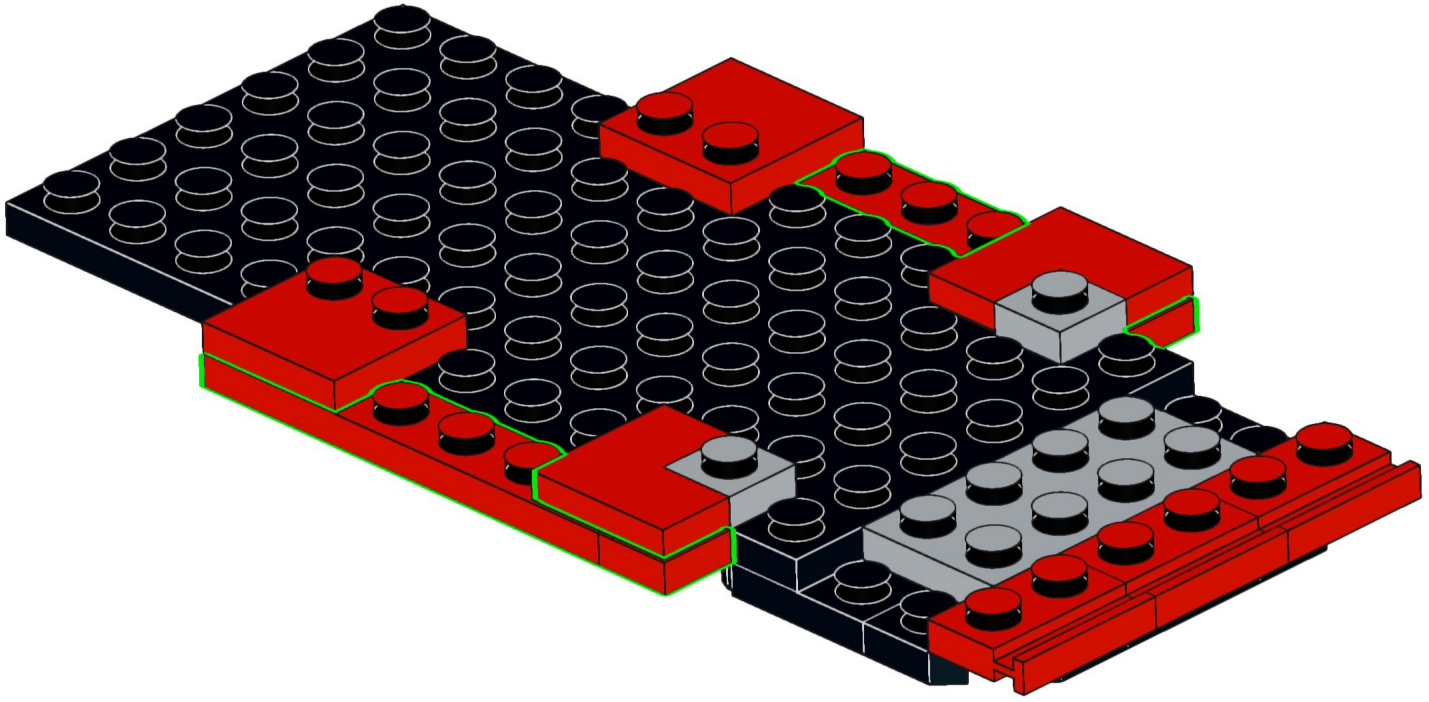

8

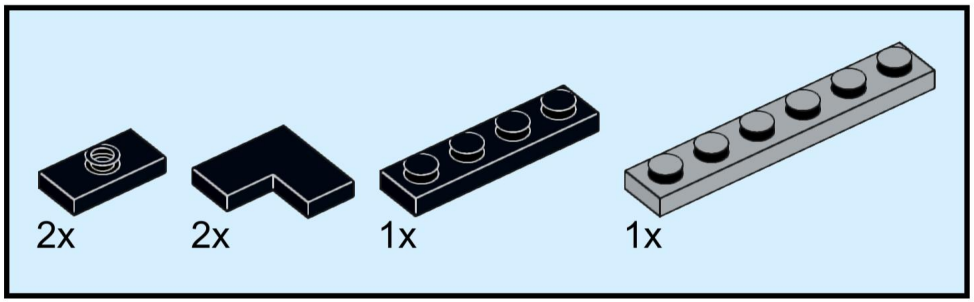

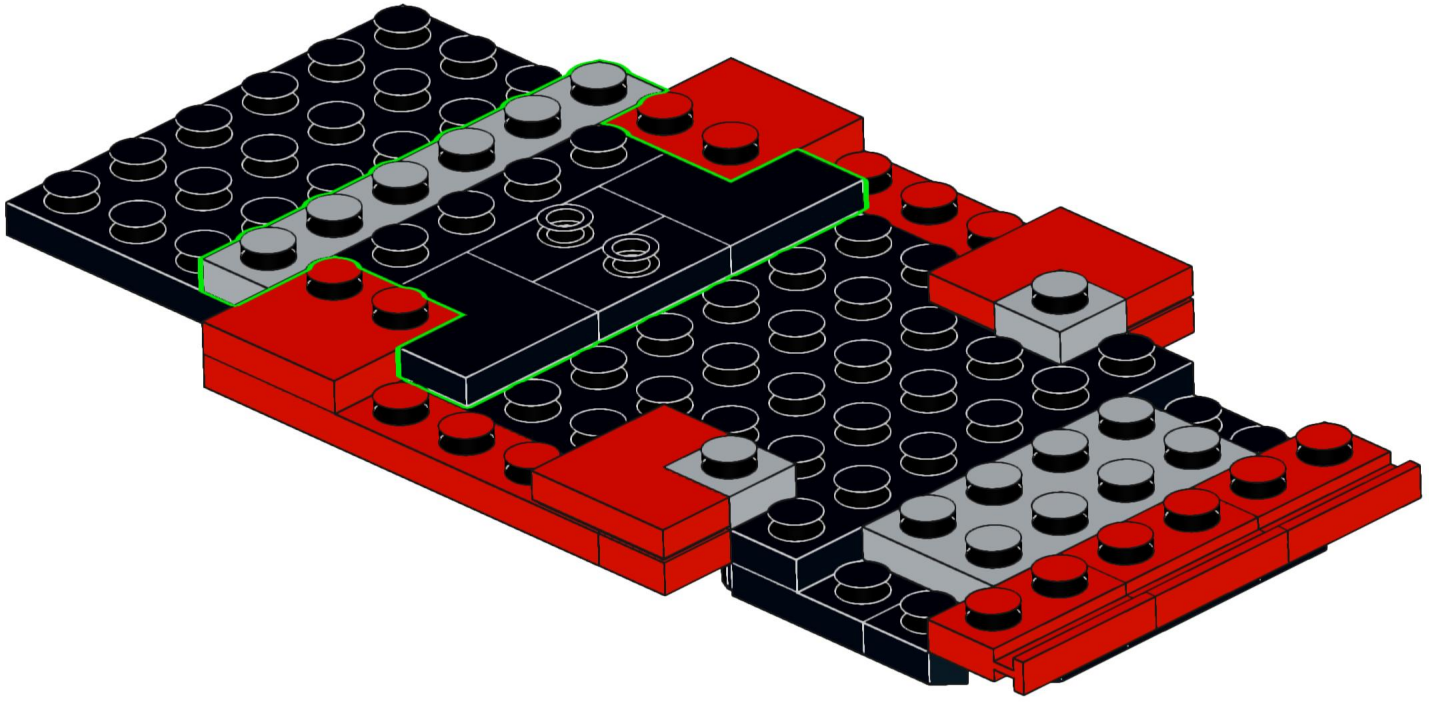

9

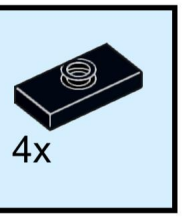

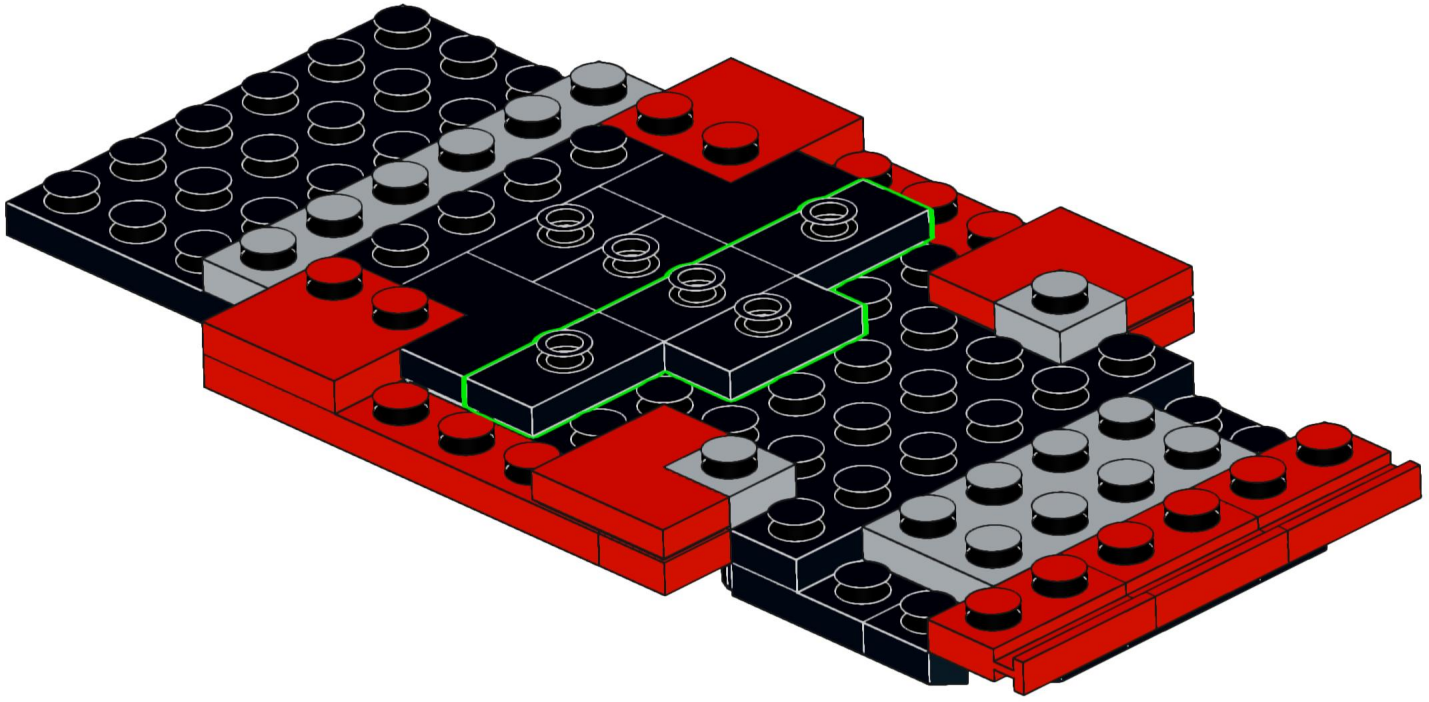

10

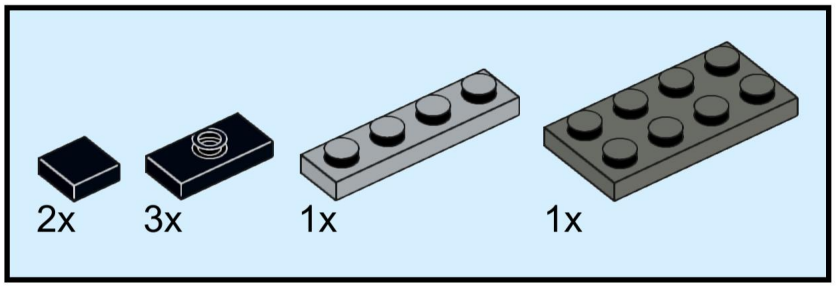

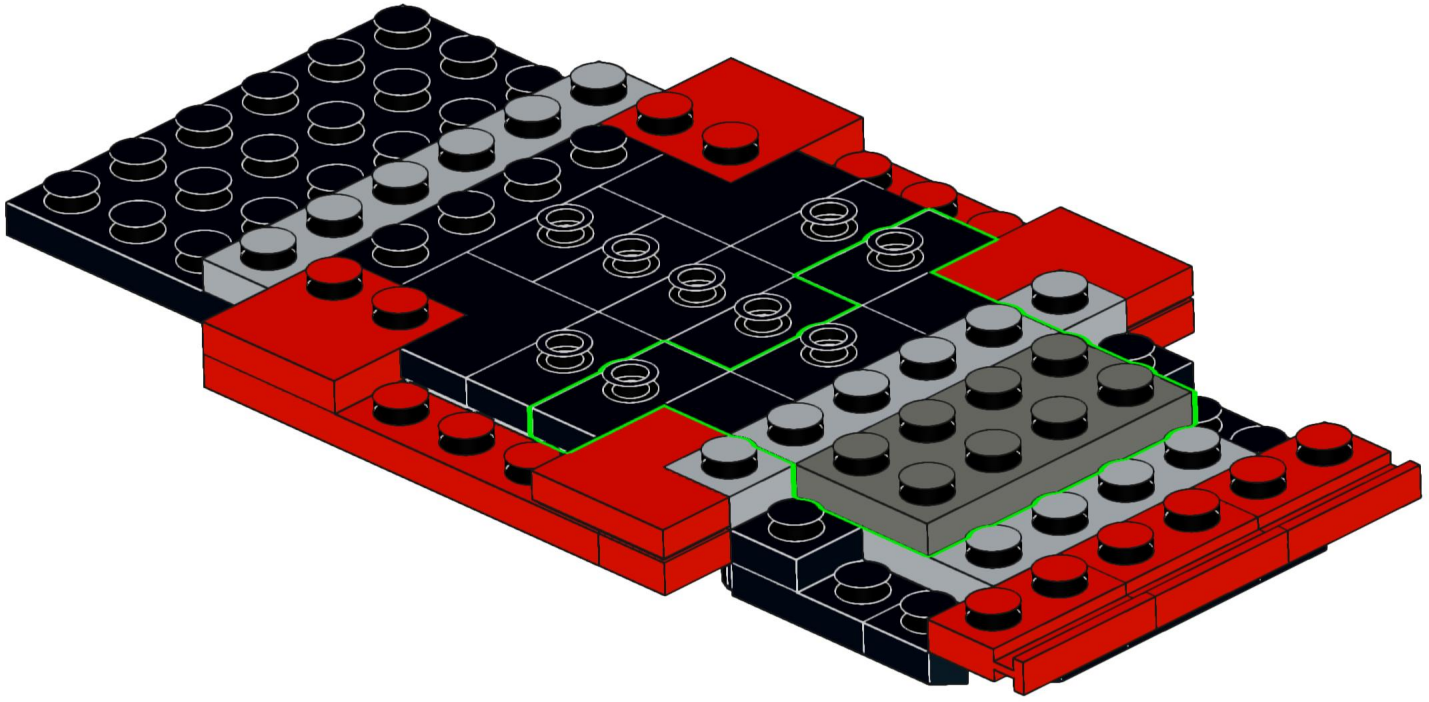

11

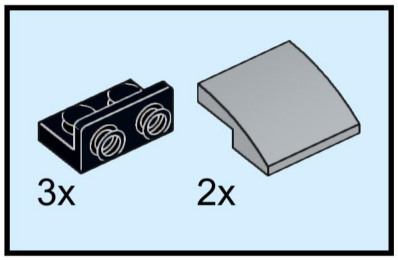

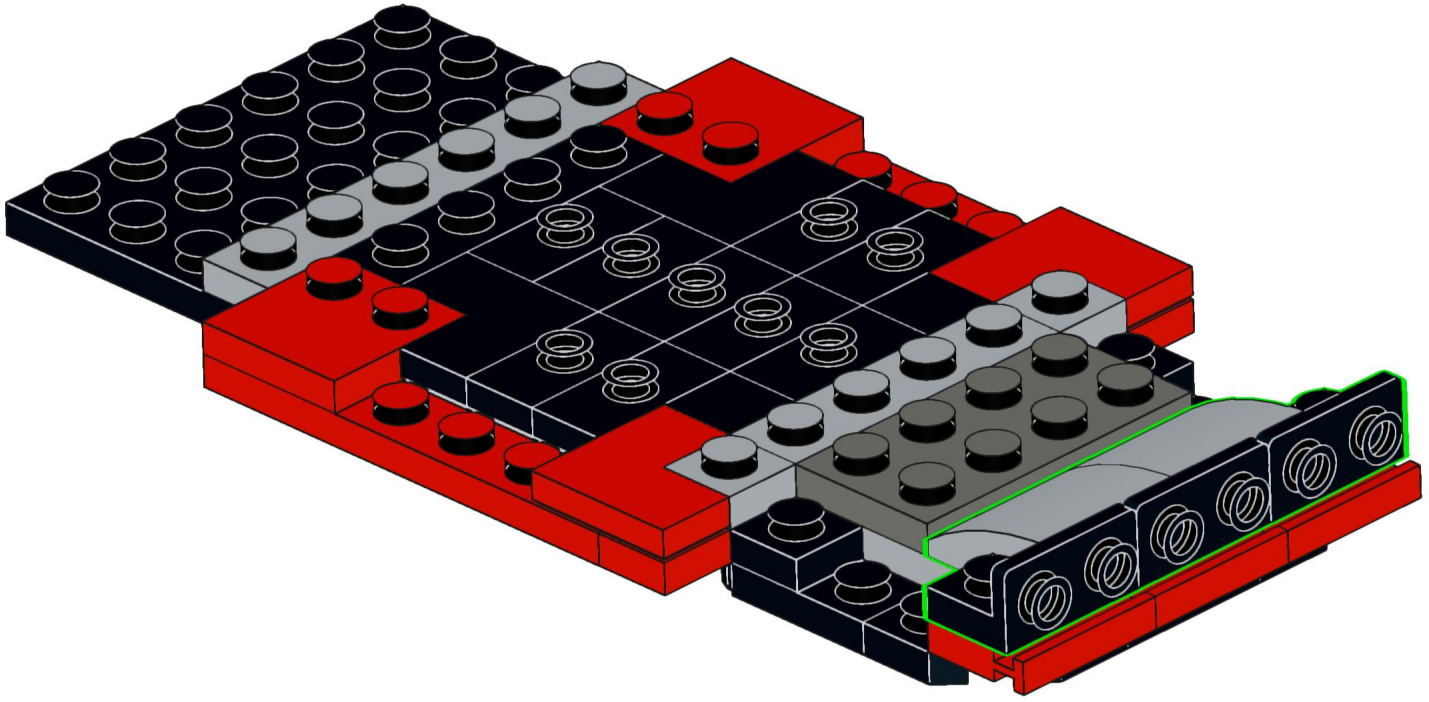

12

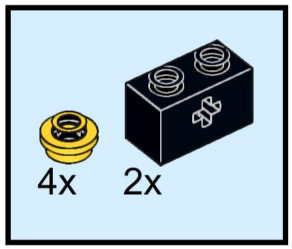

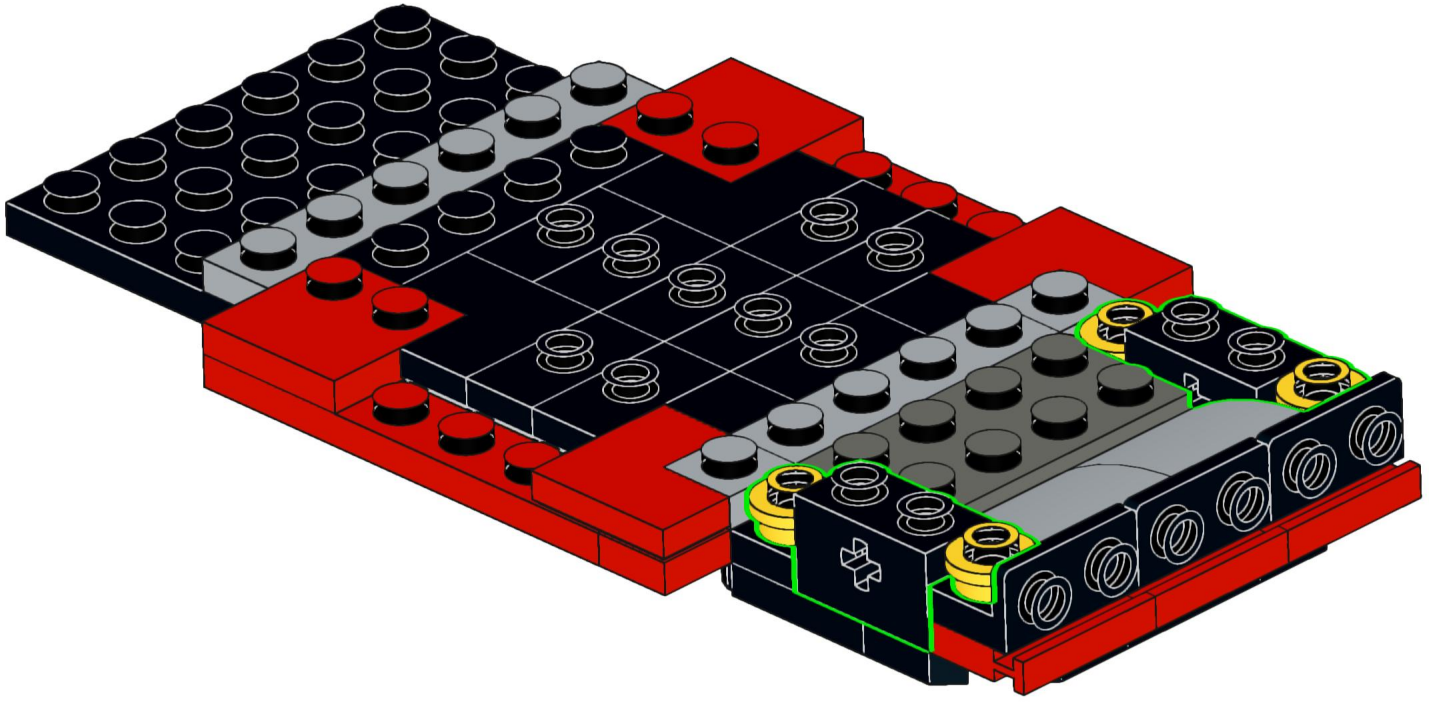

13

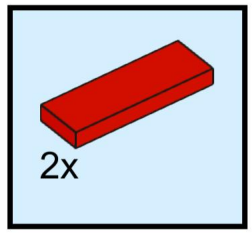

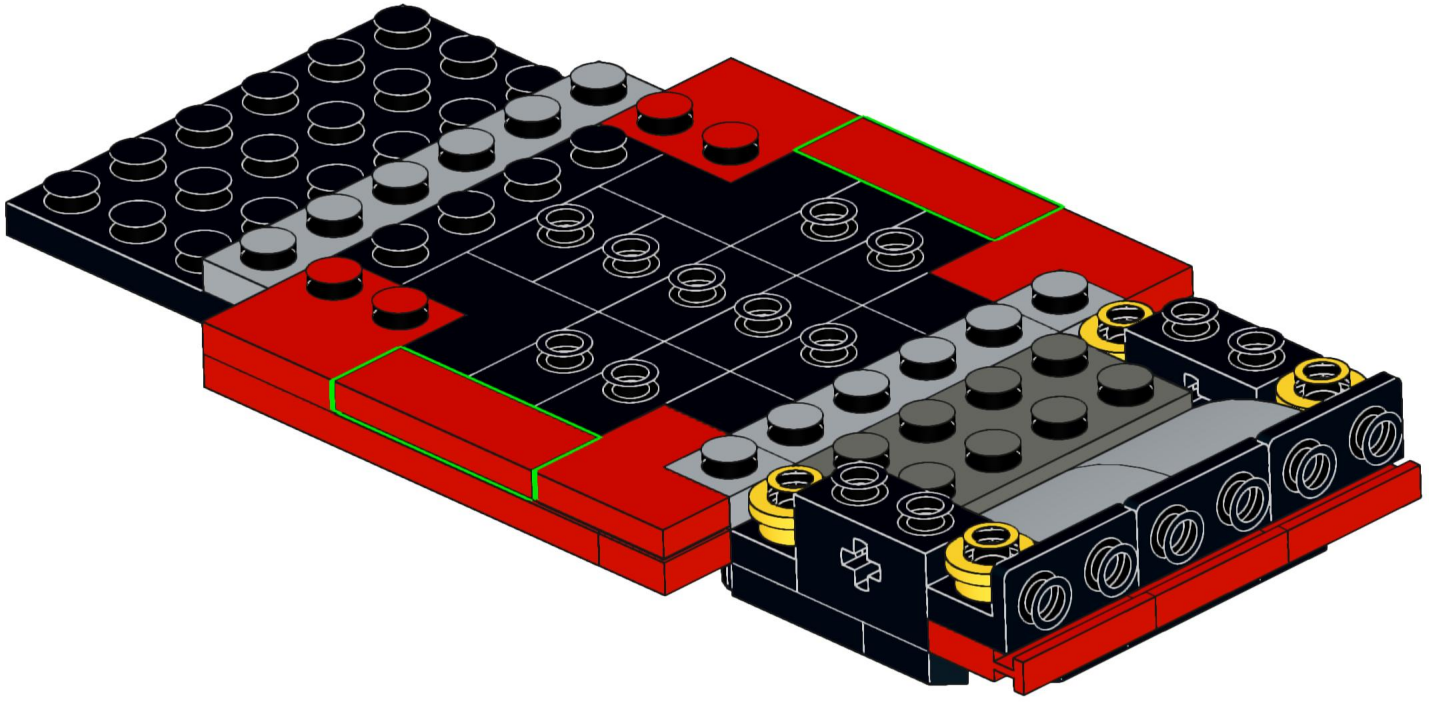

14

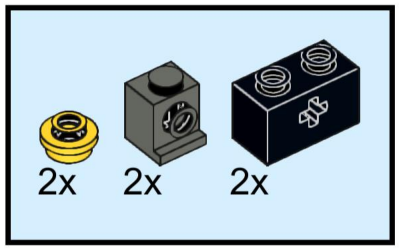

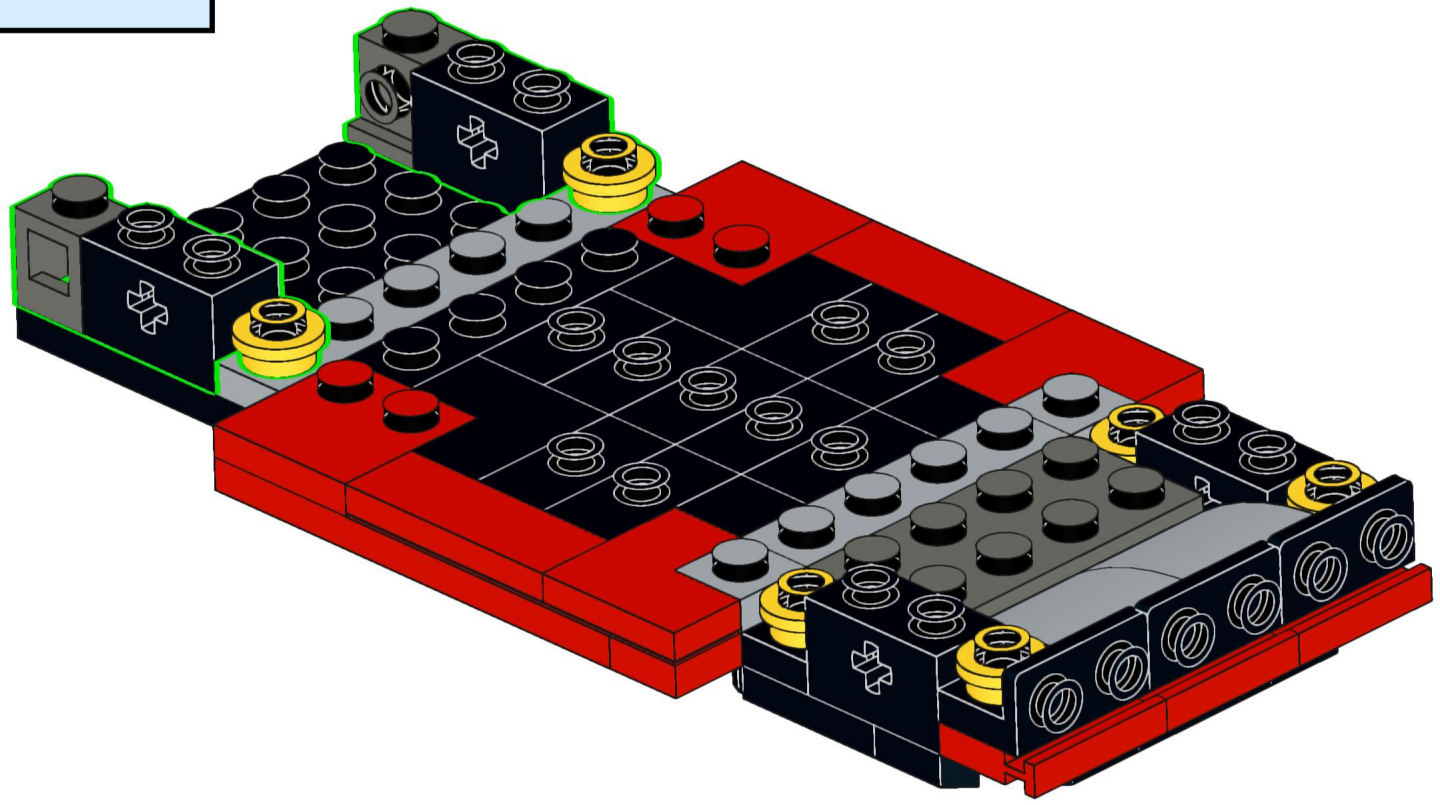

15

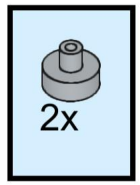

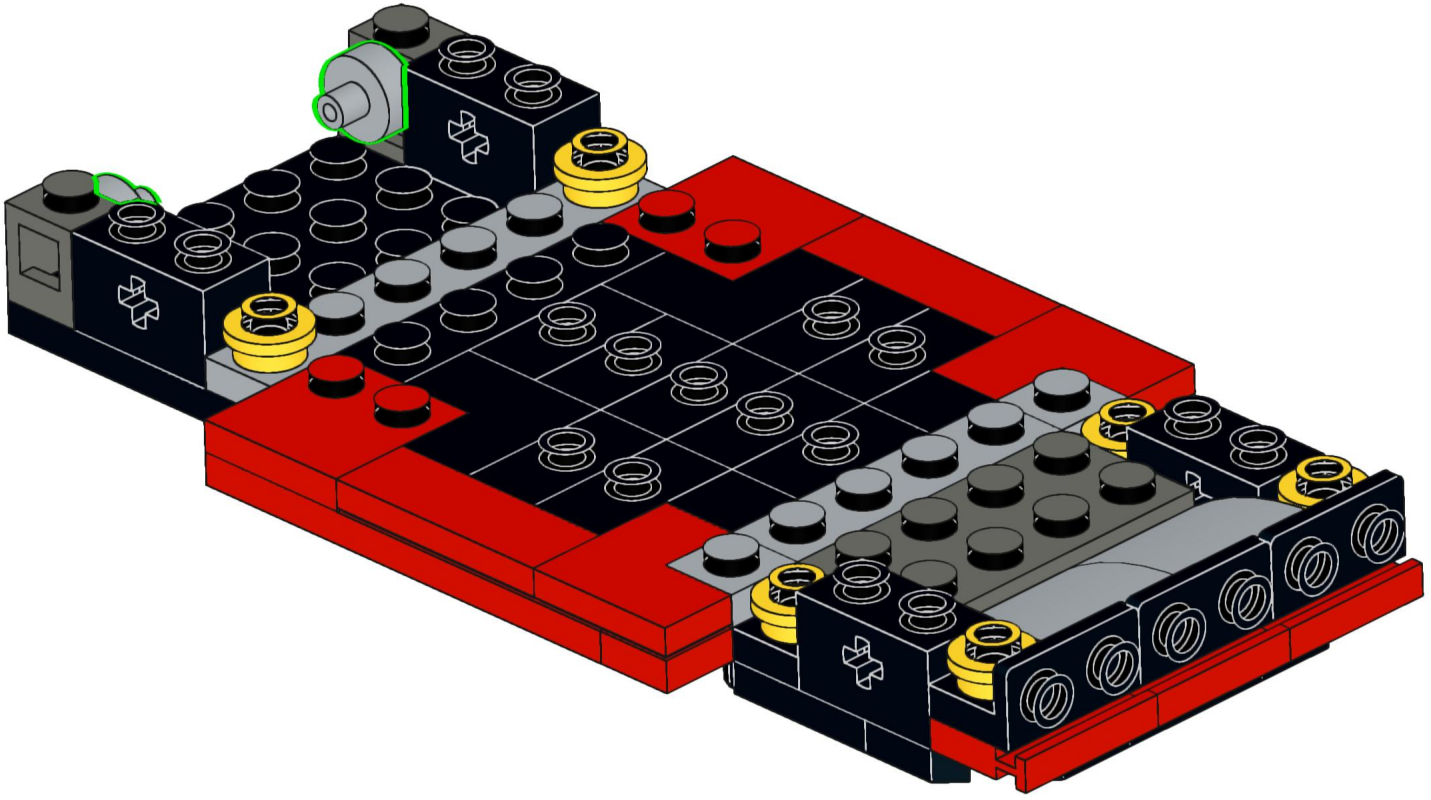

16

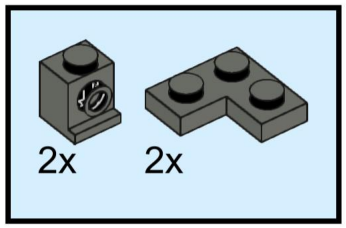

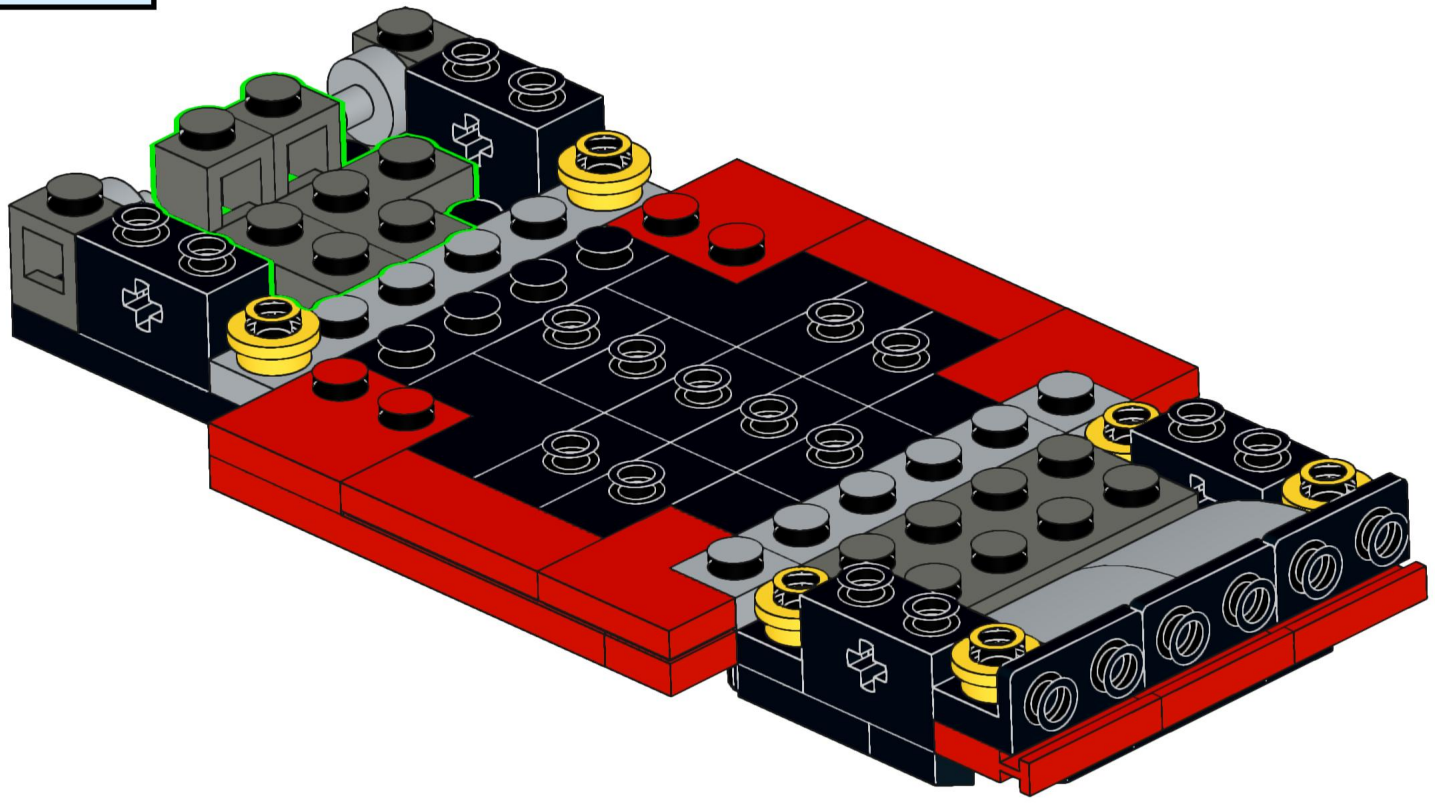

17

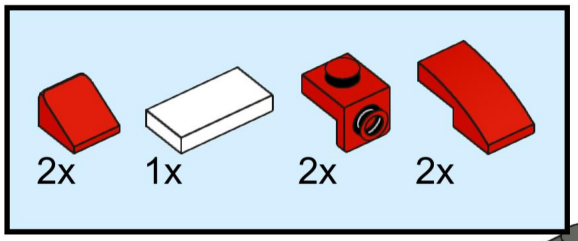

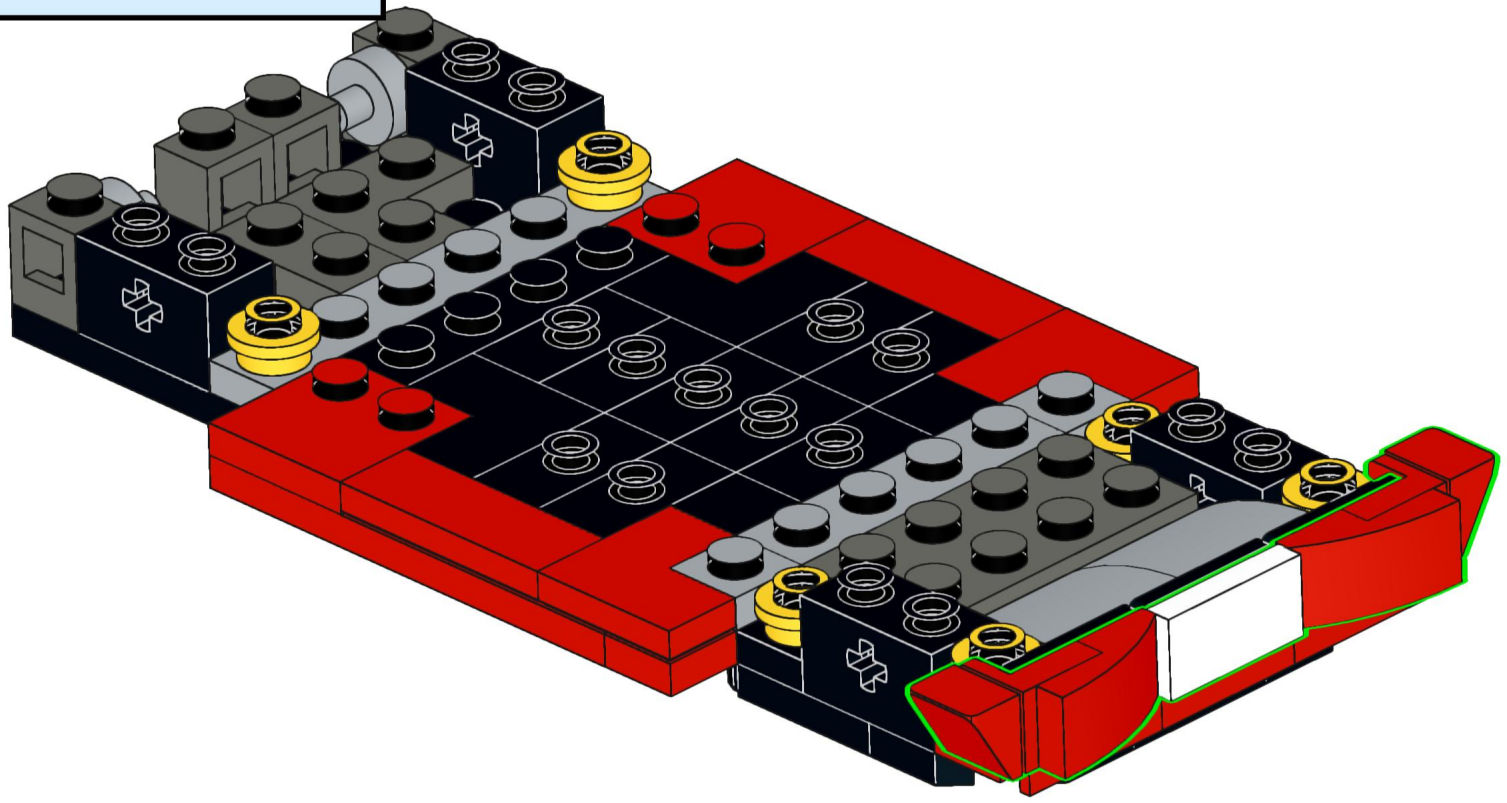

18

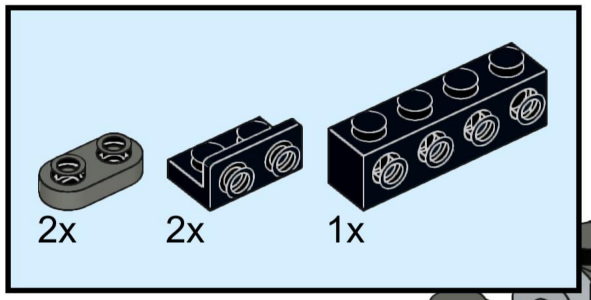

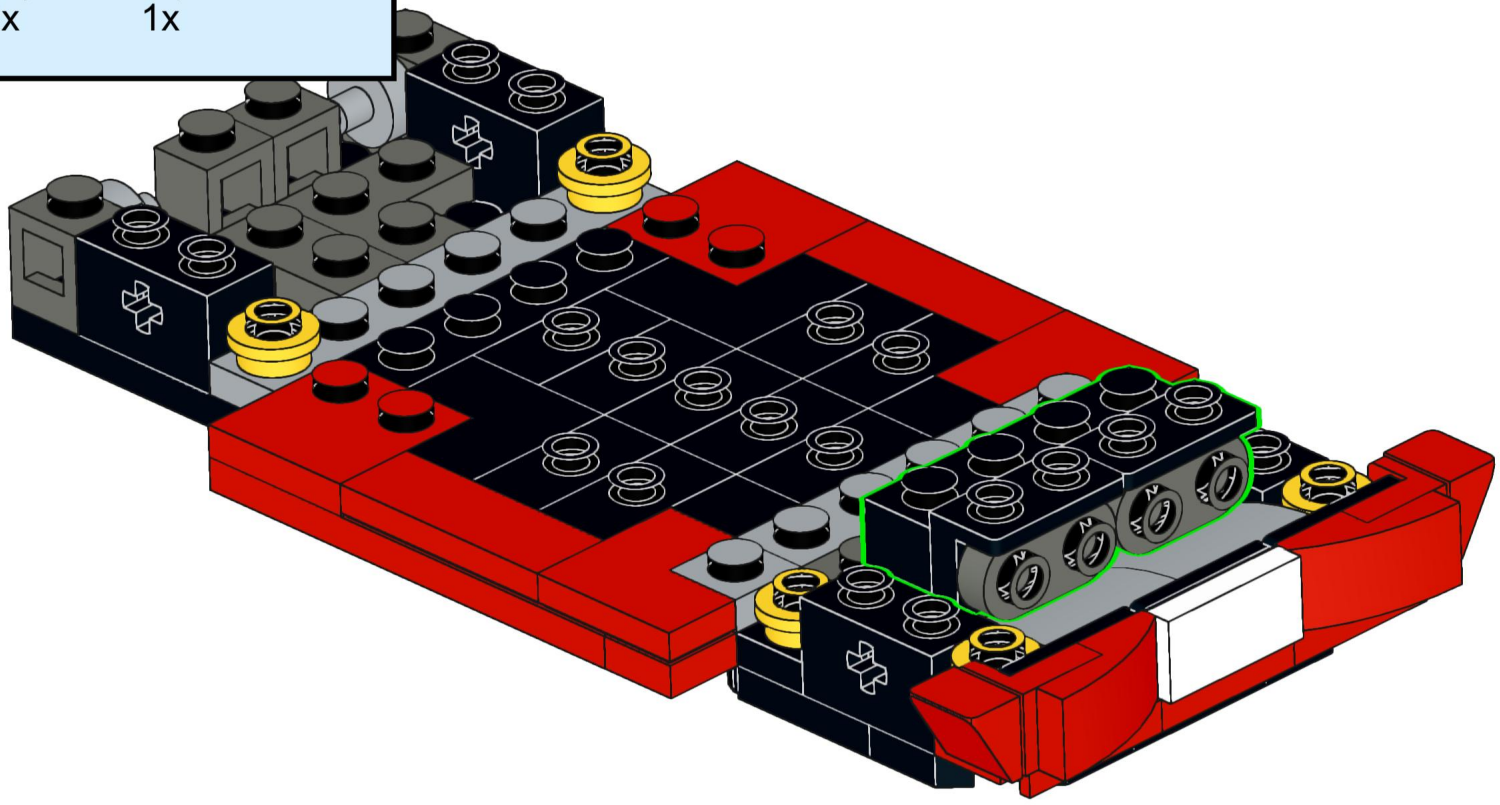

19

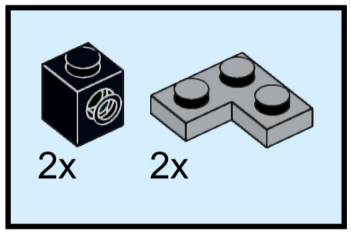

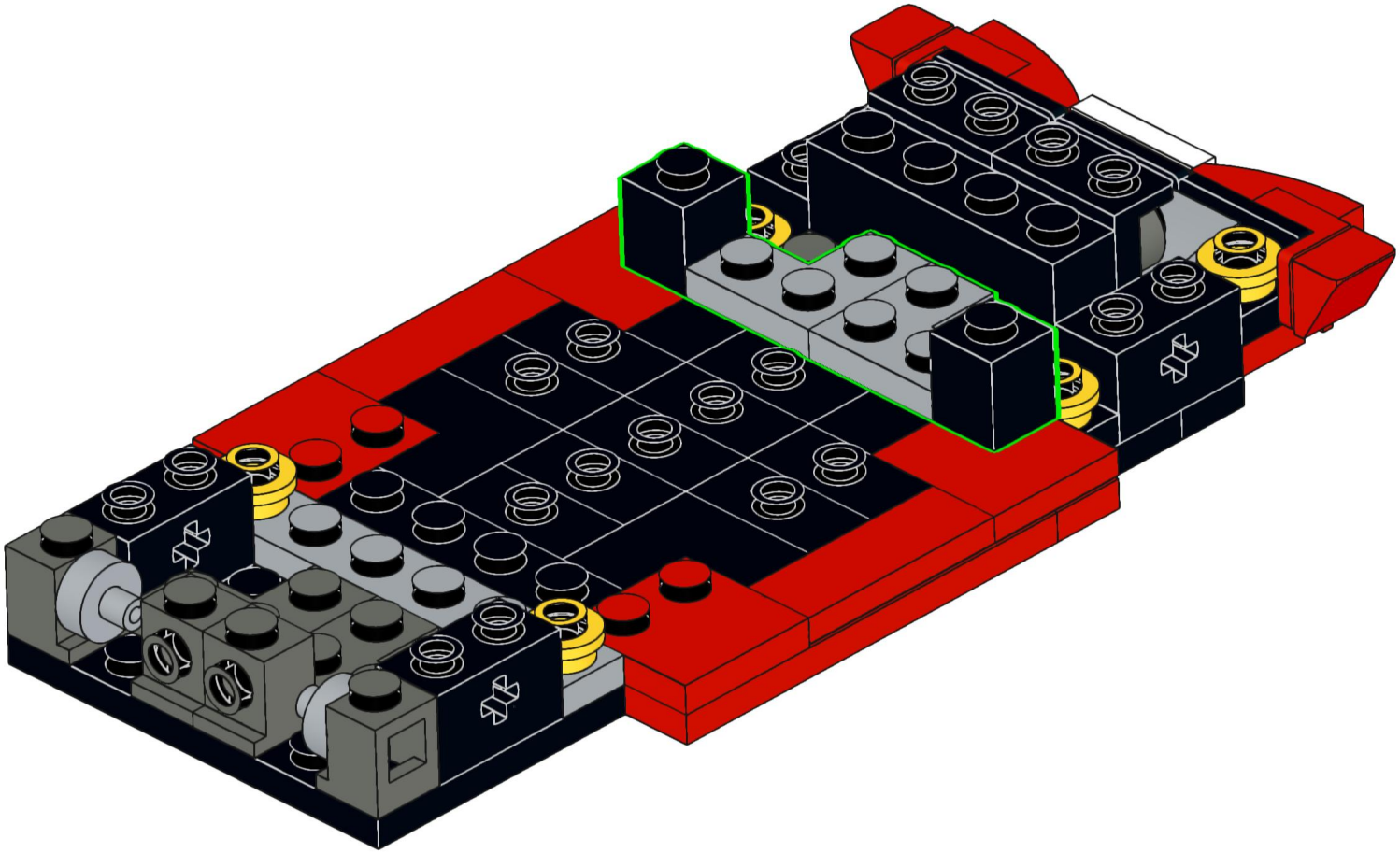

20

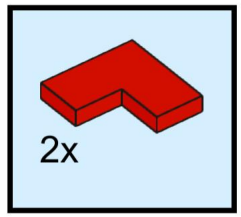

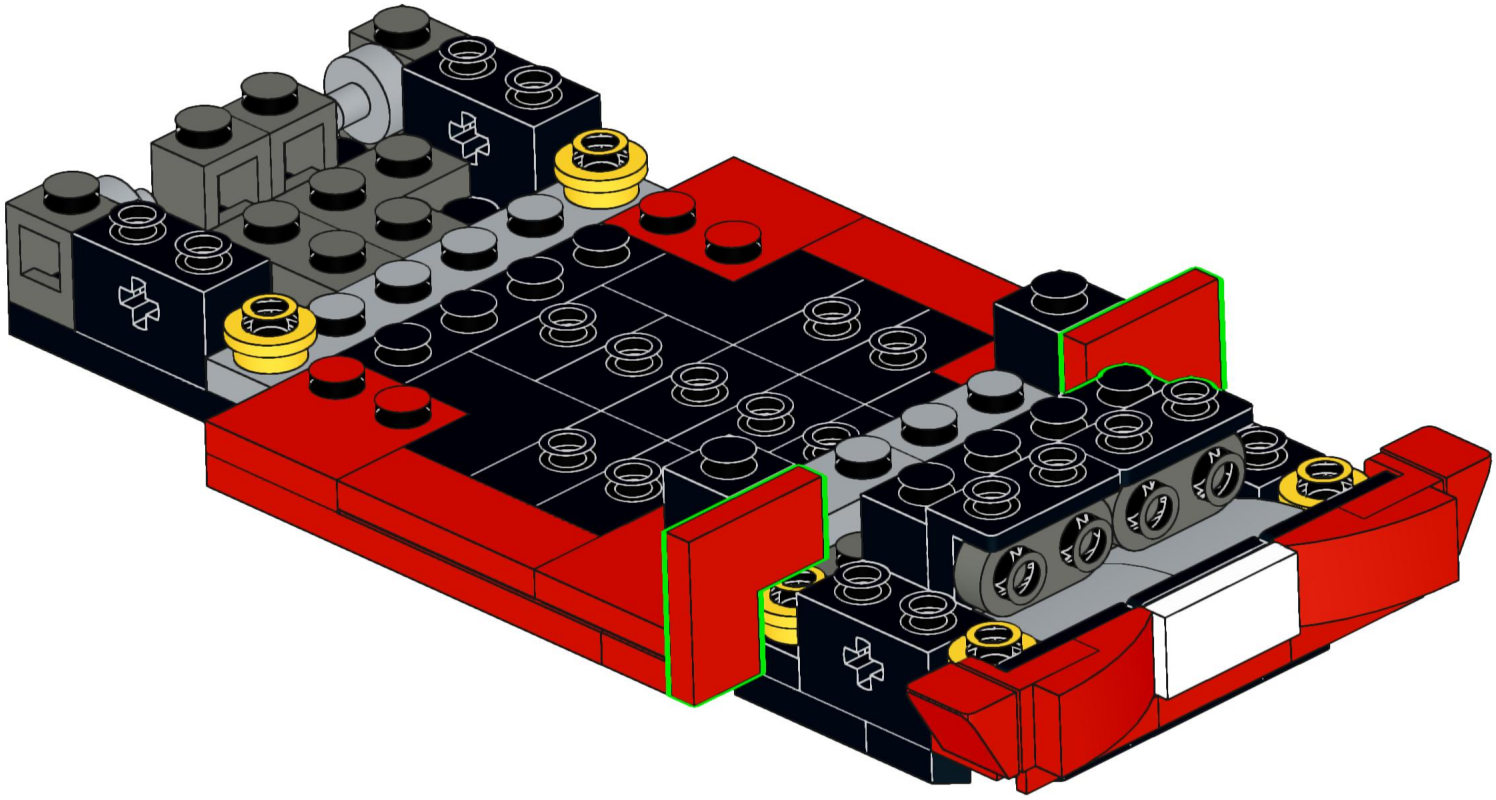

21

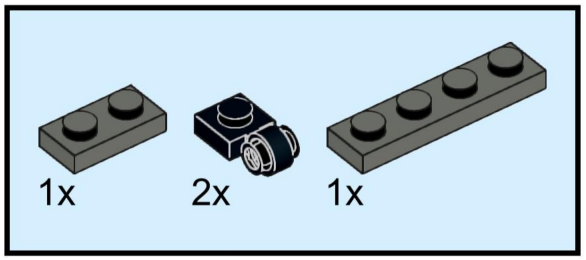

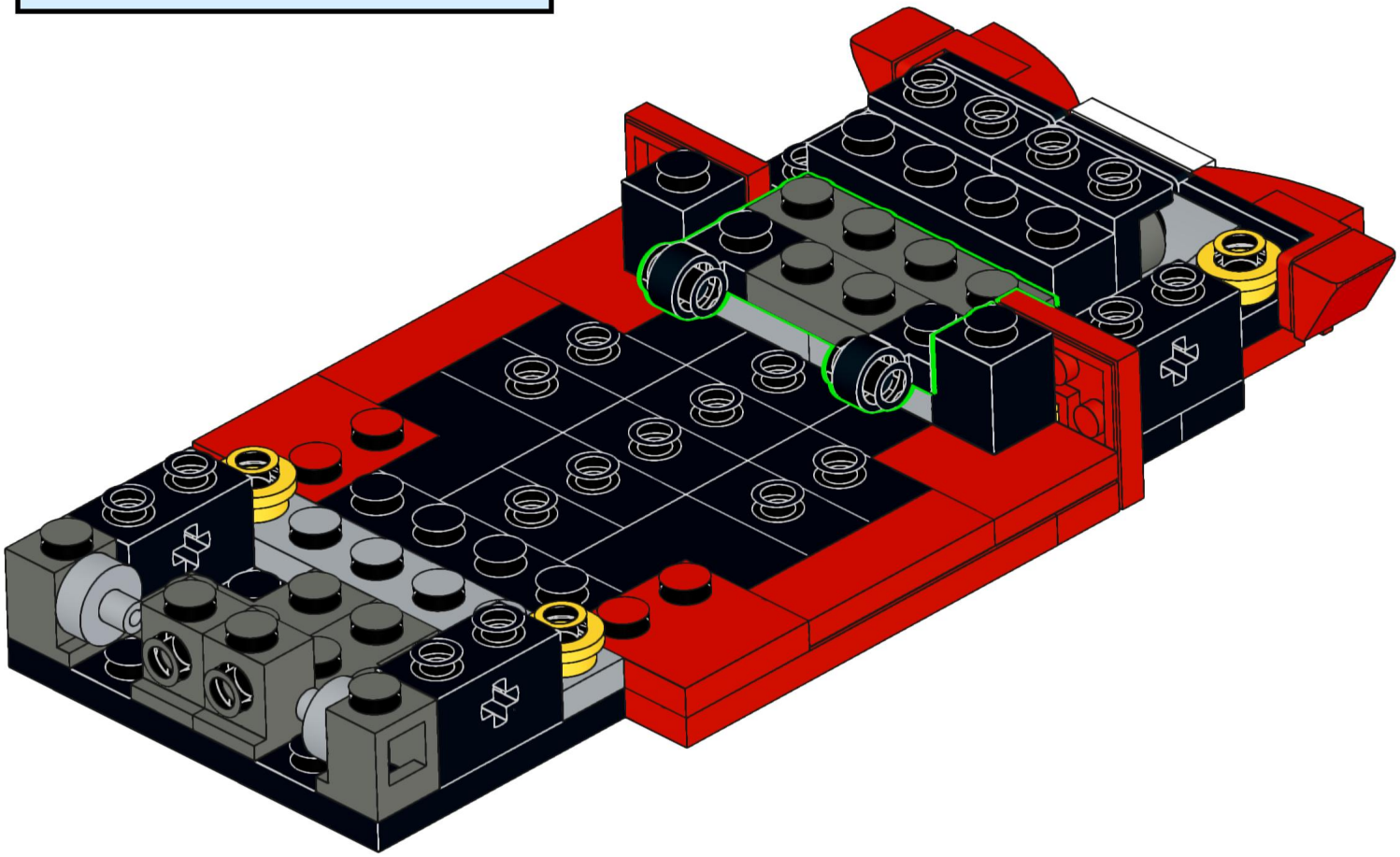

22

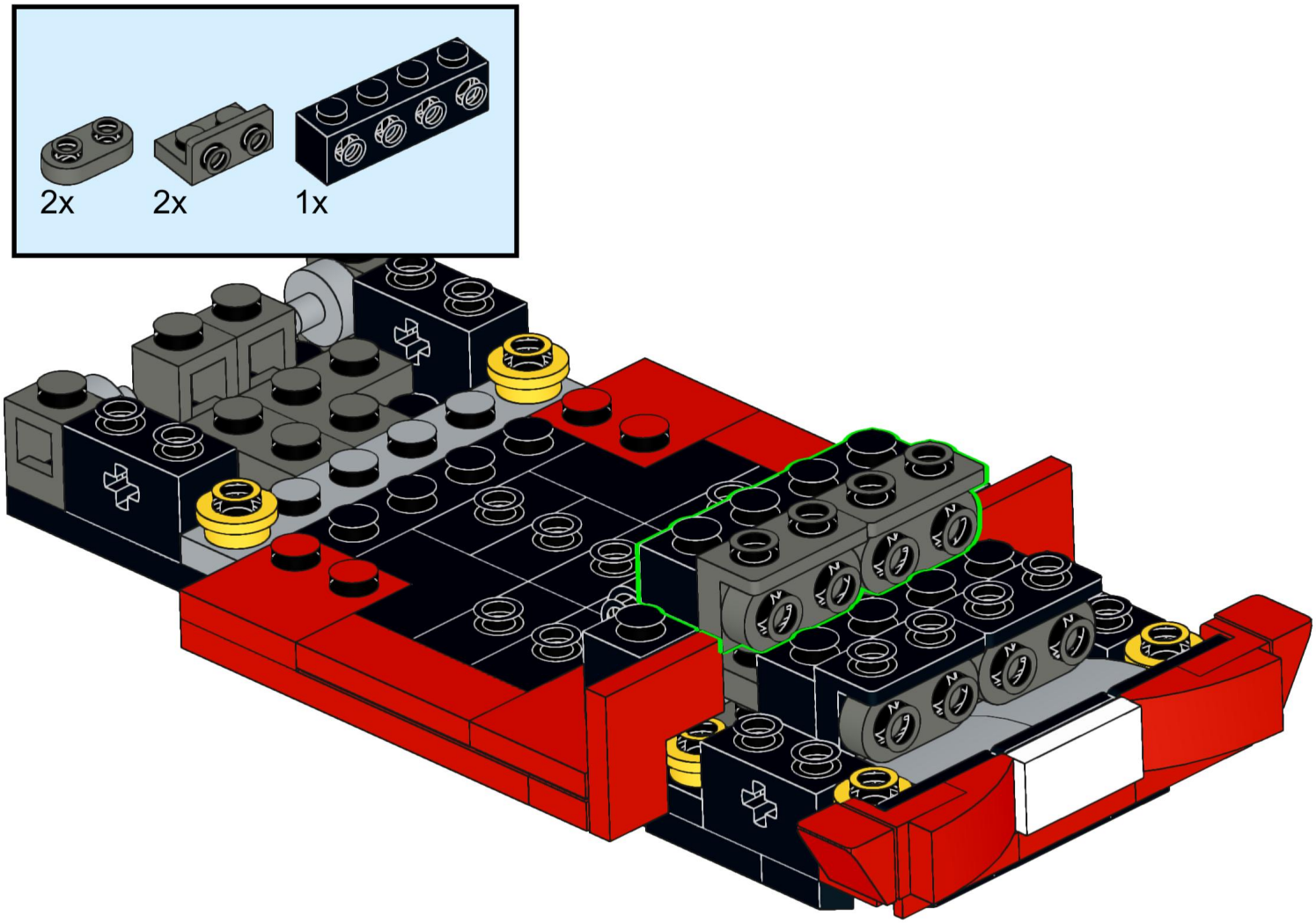

23

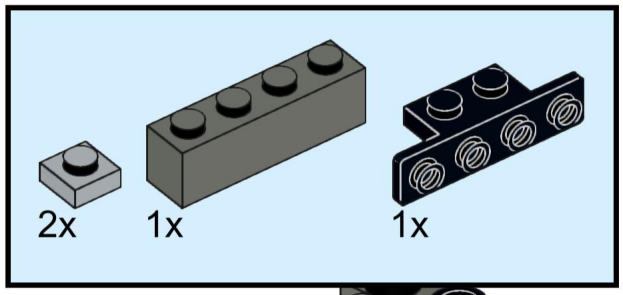

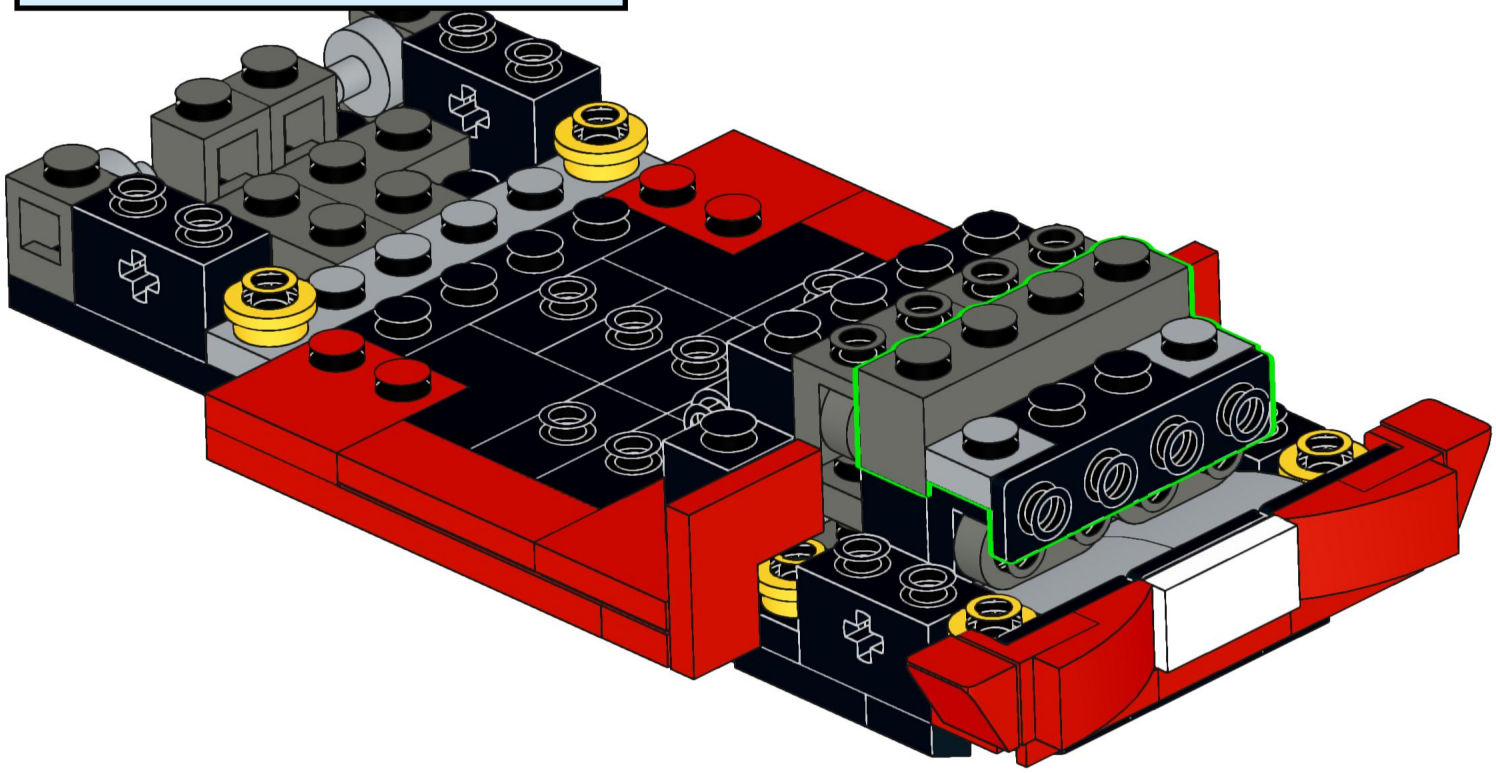

24

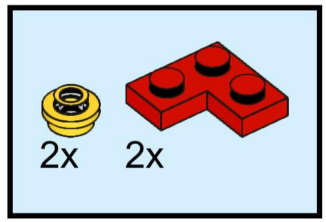

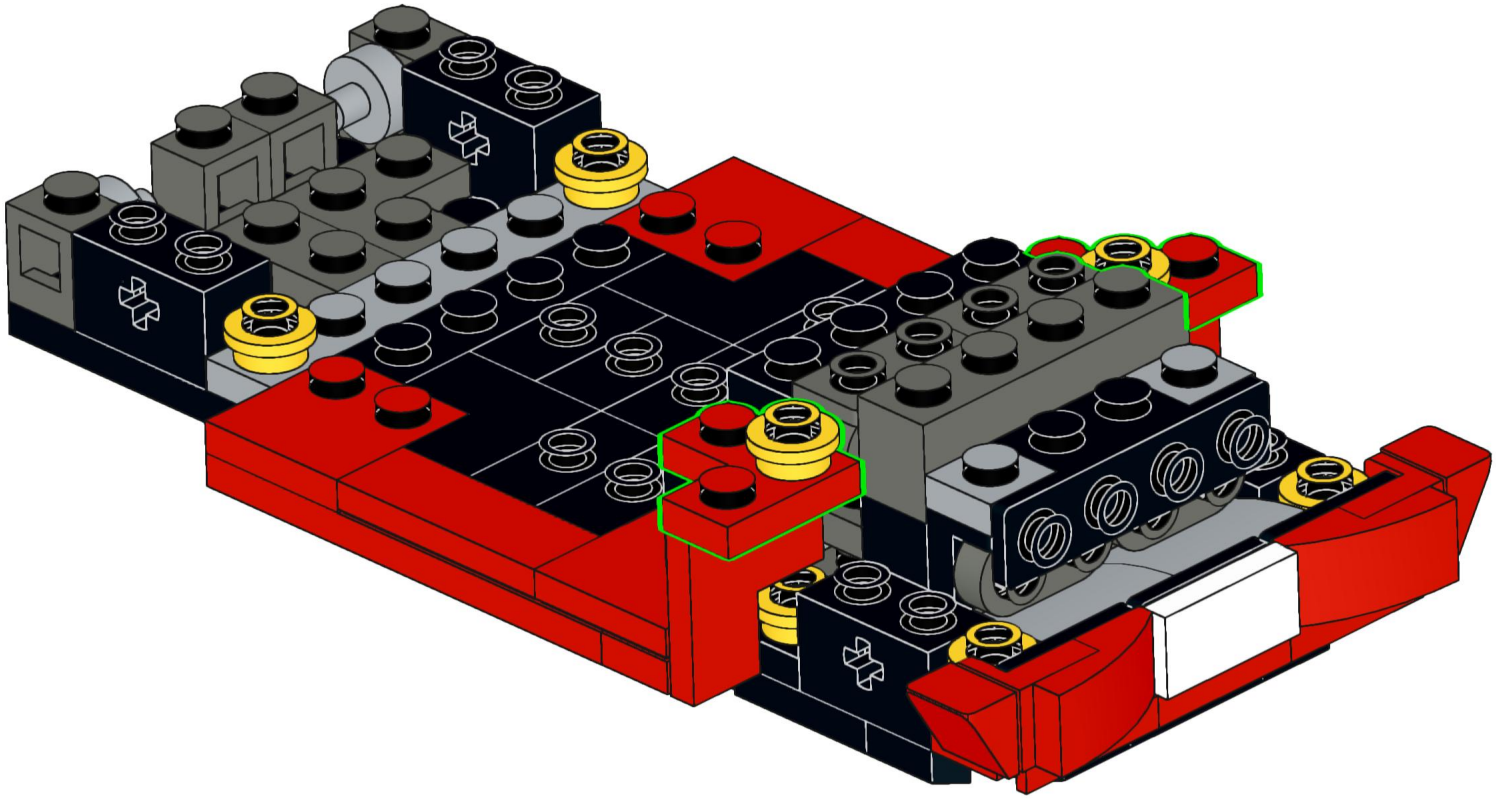

25

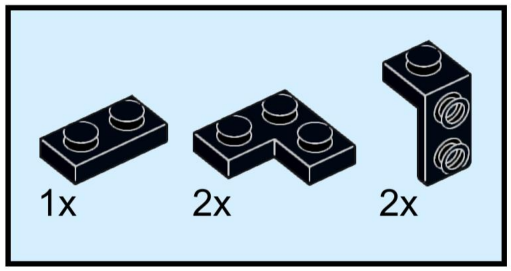

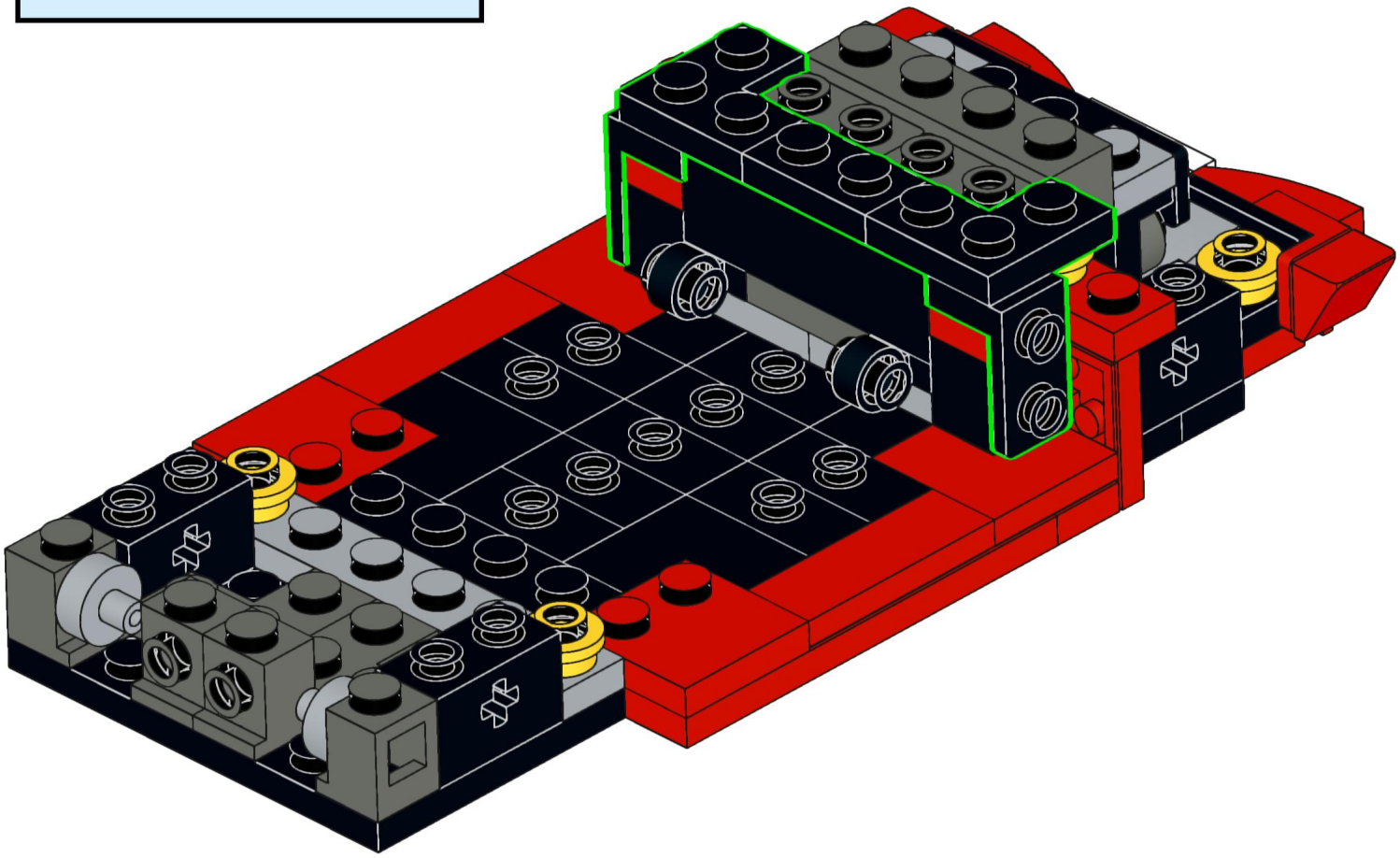

26

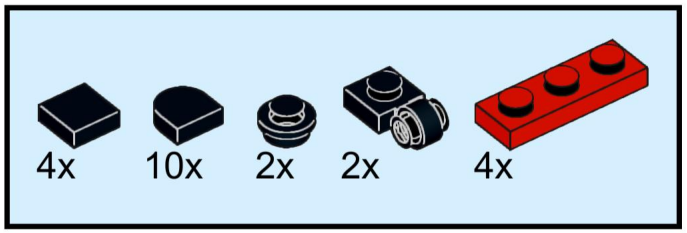

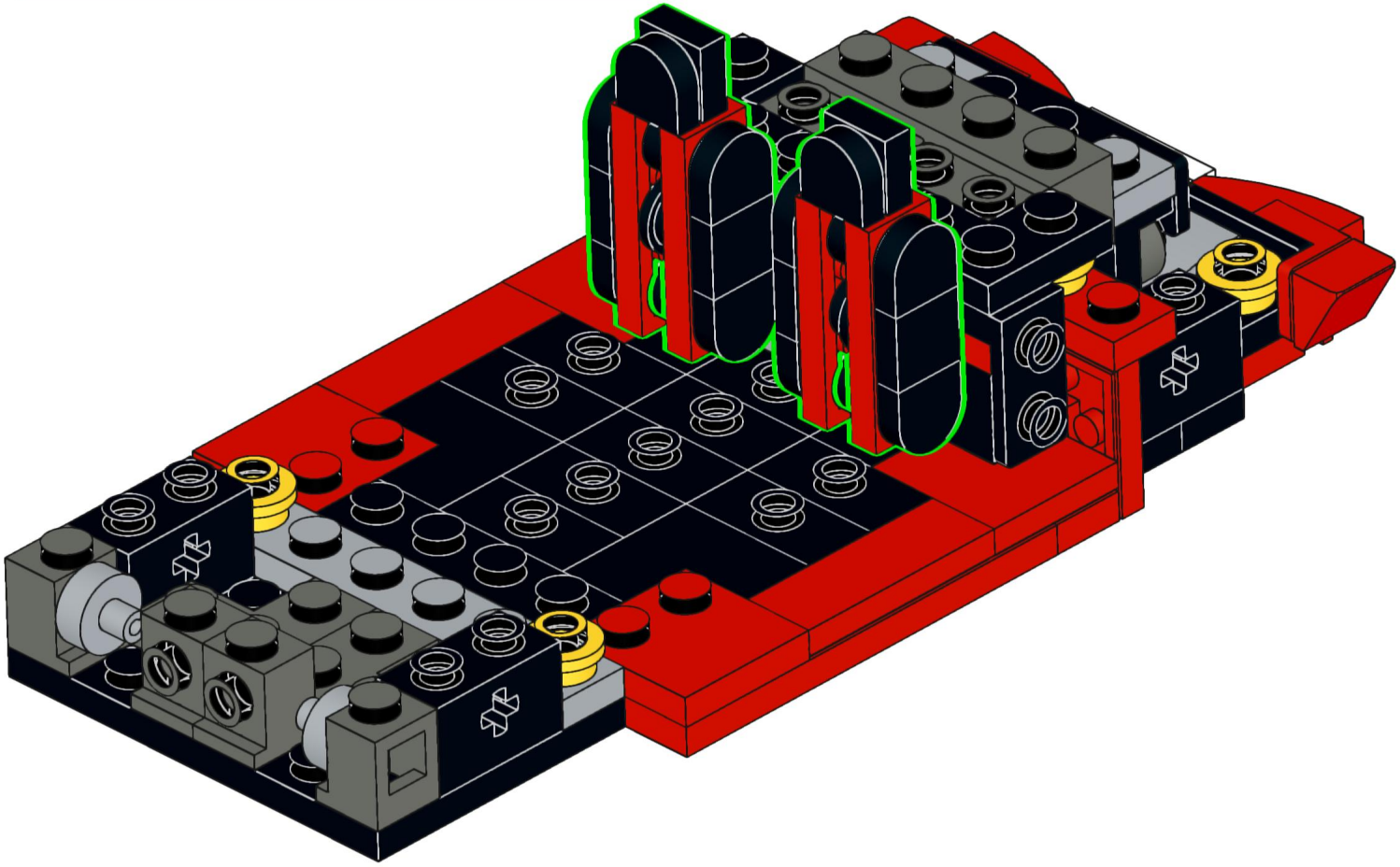

27

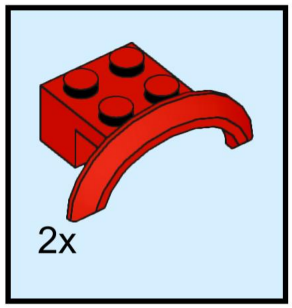

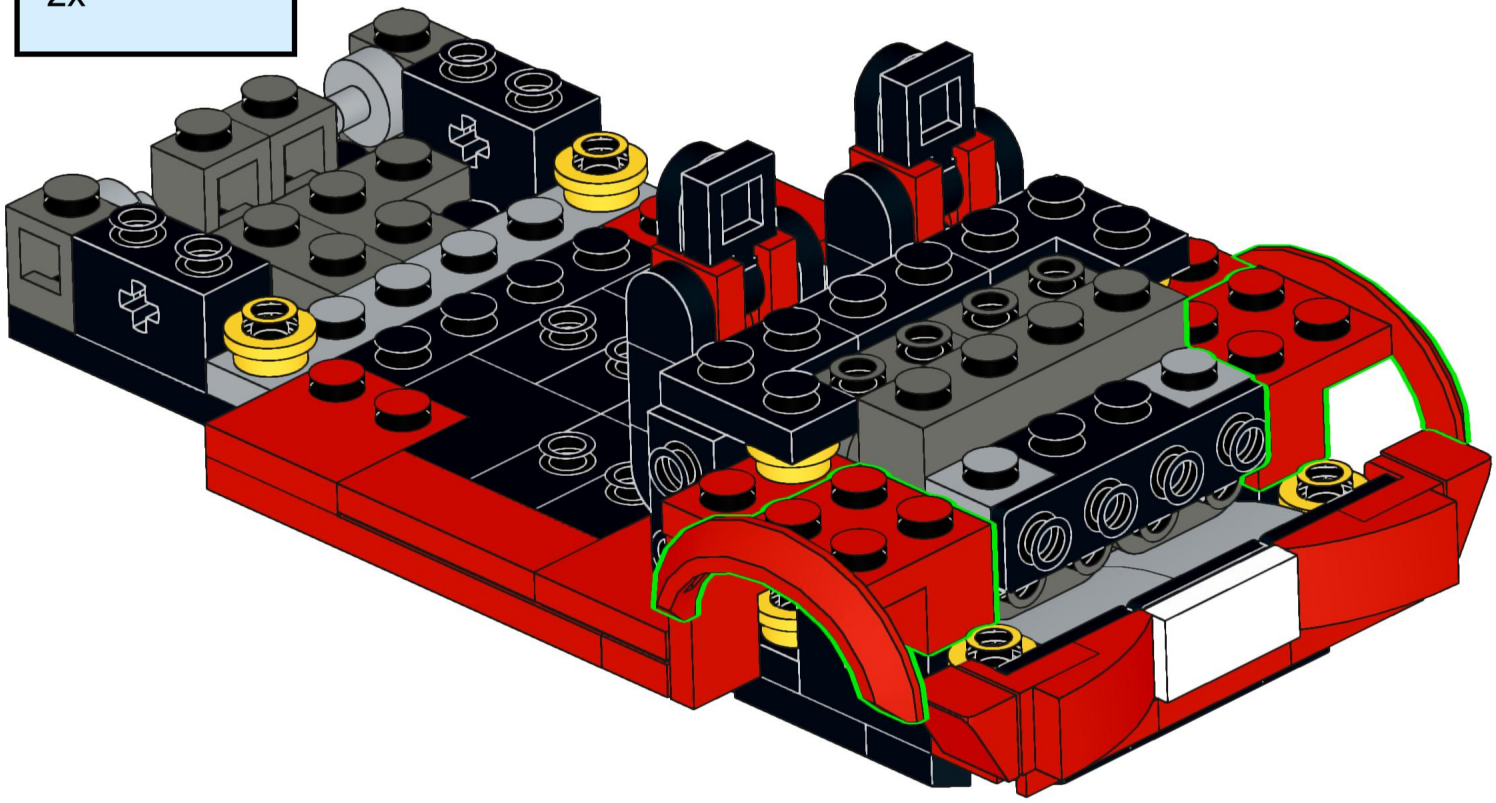

28

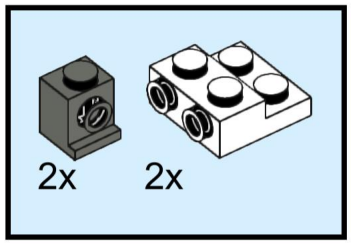

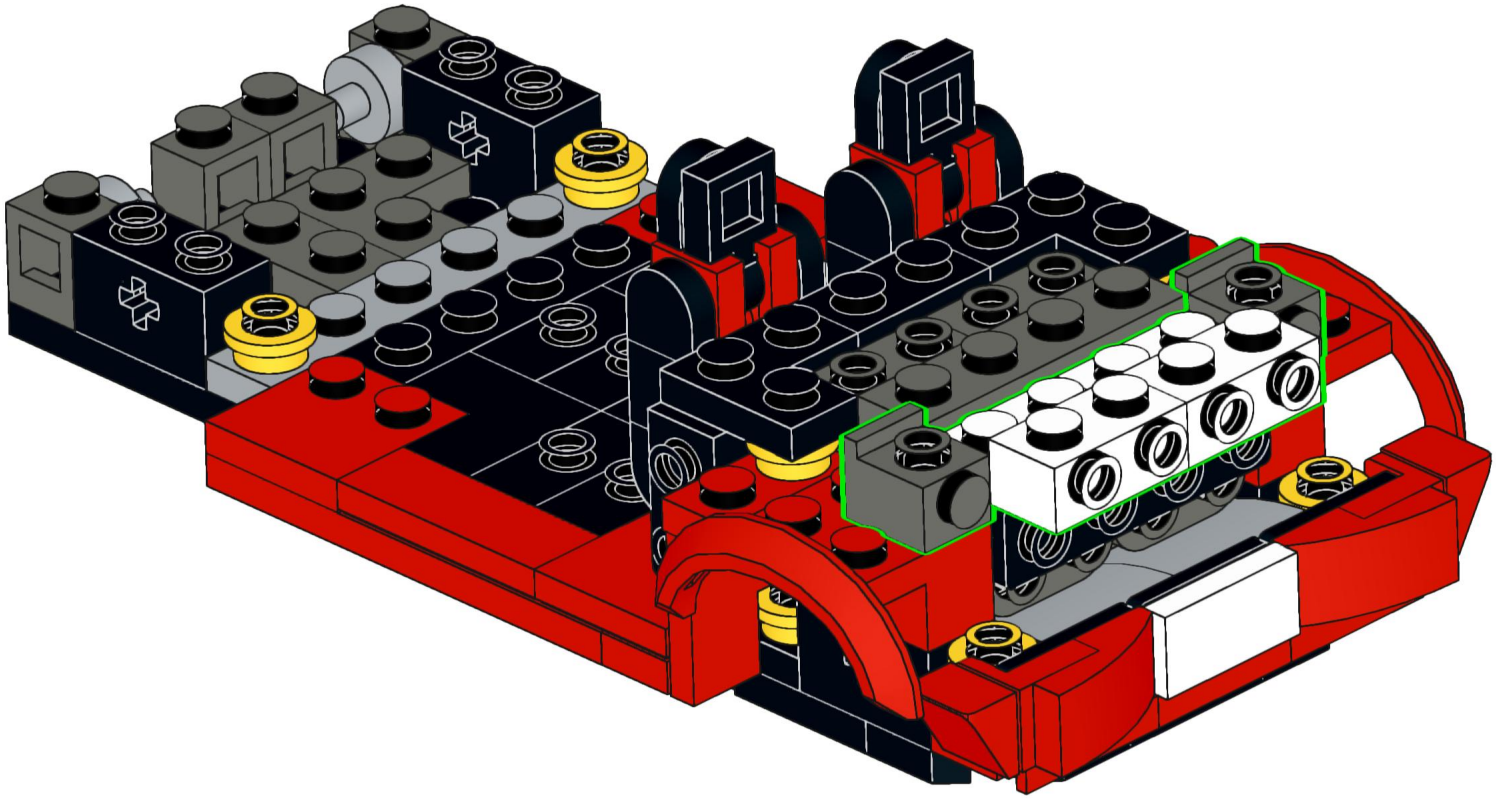

29

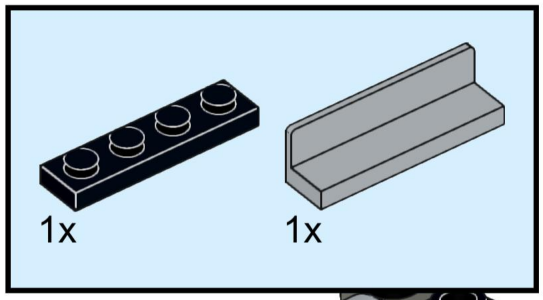

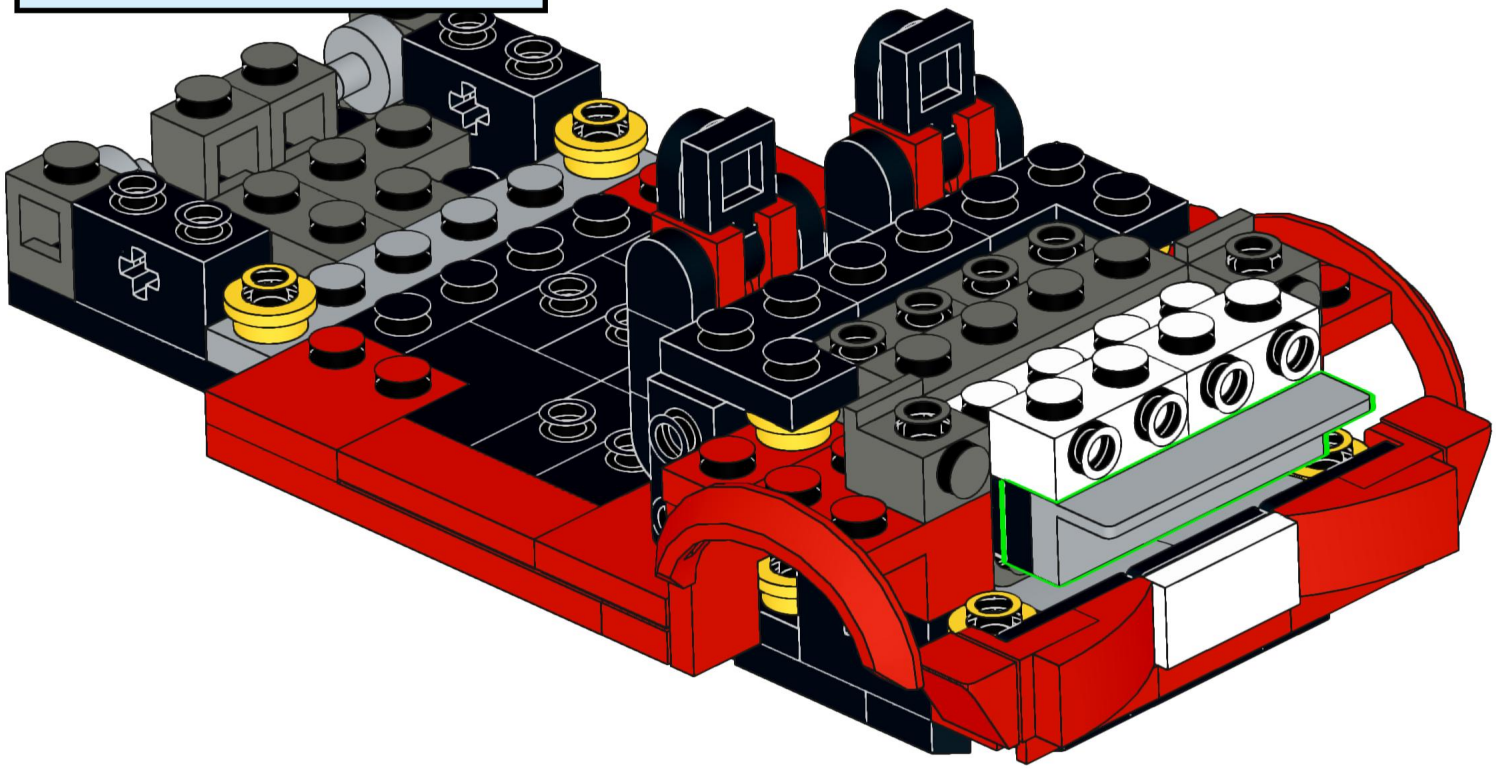

30

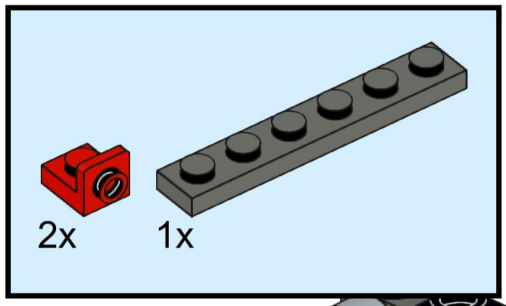

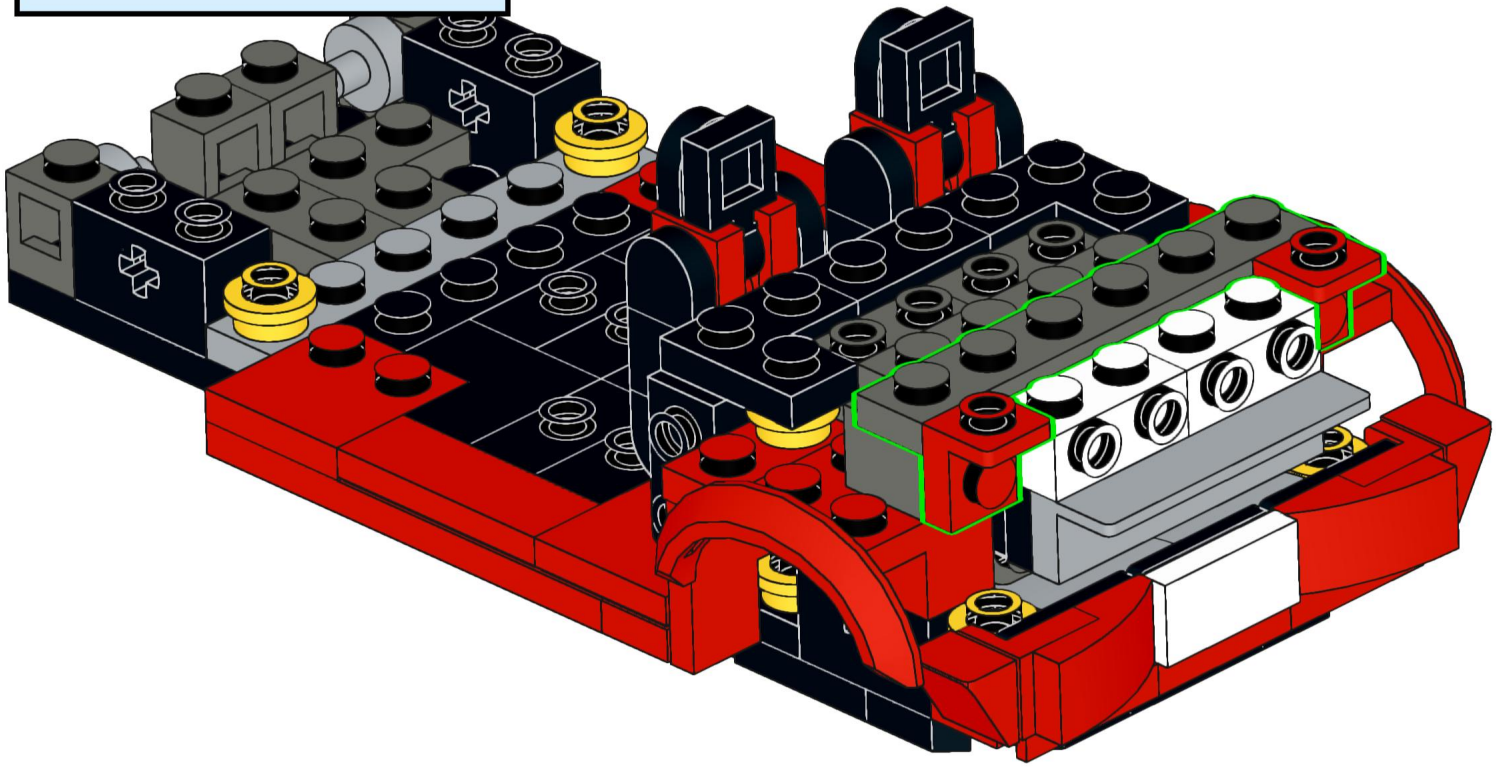

31

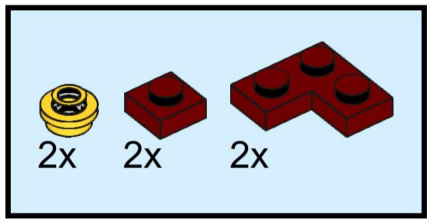

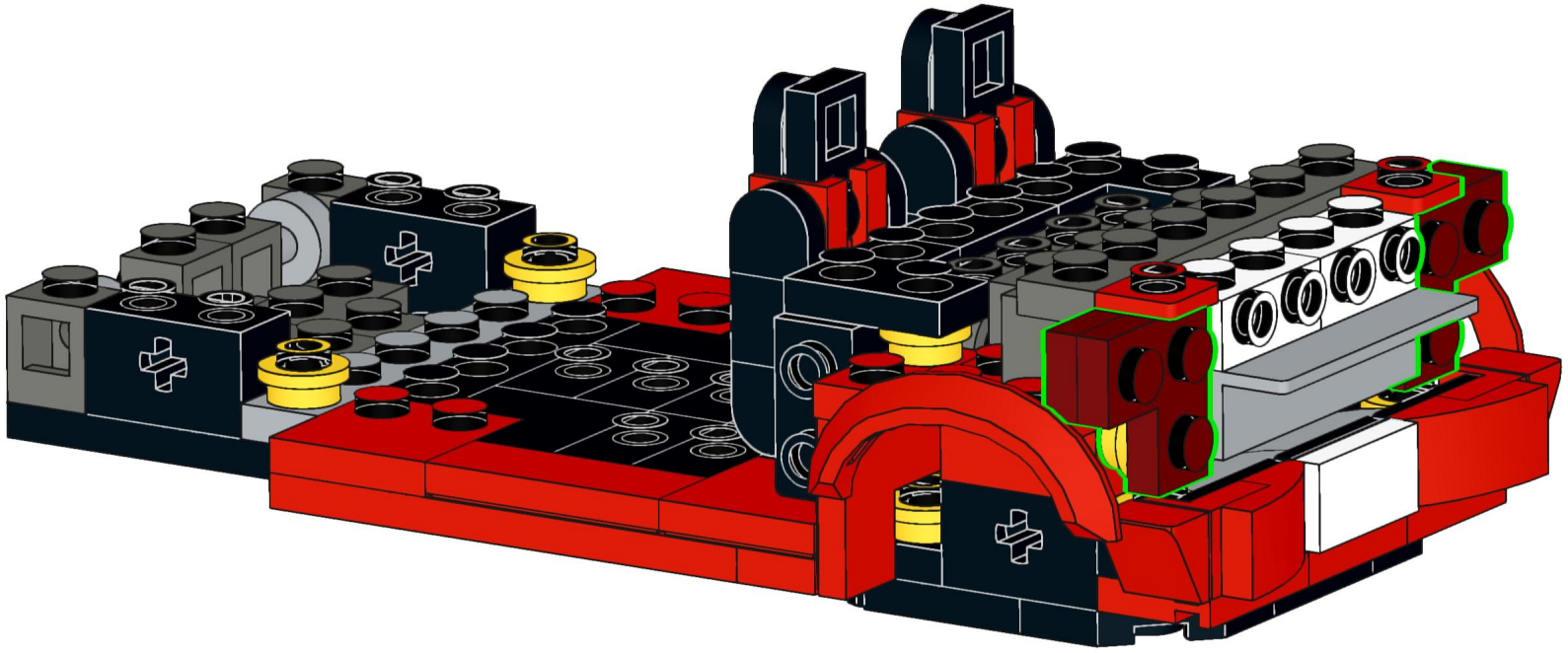

32

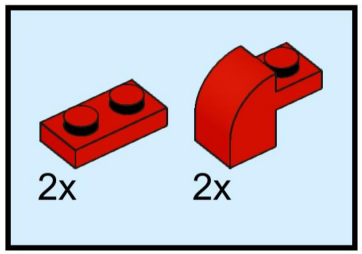

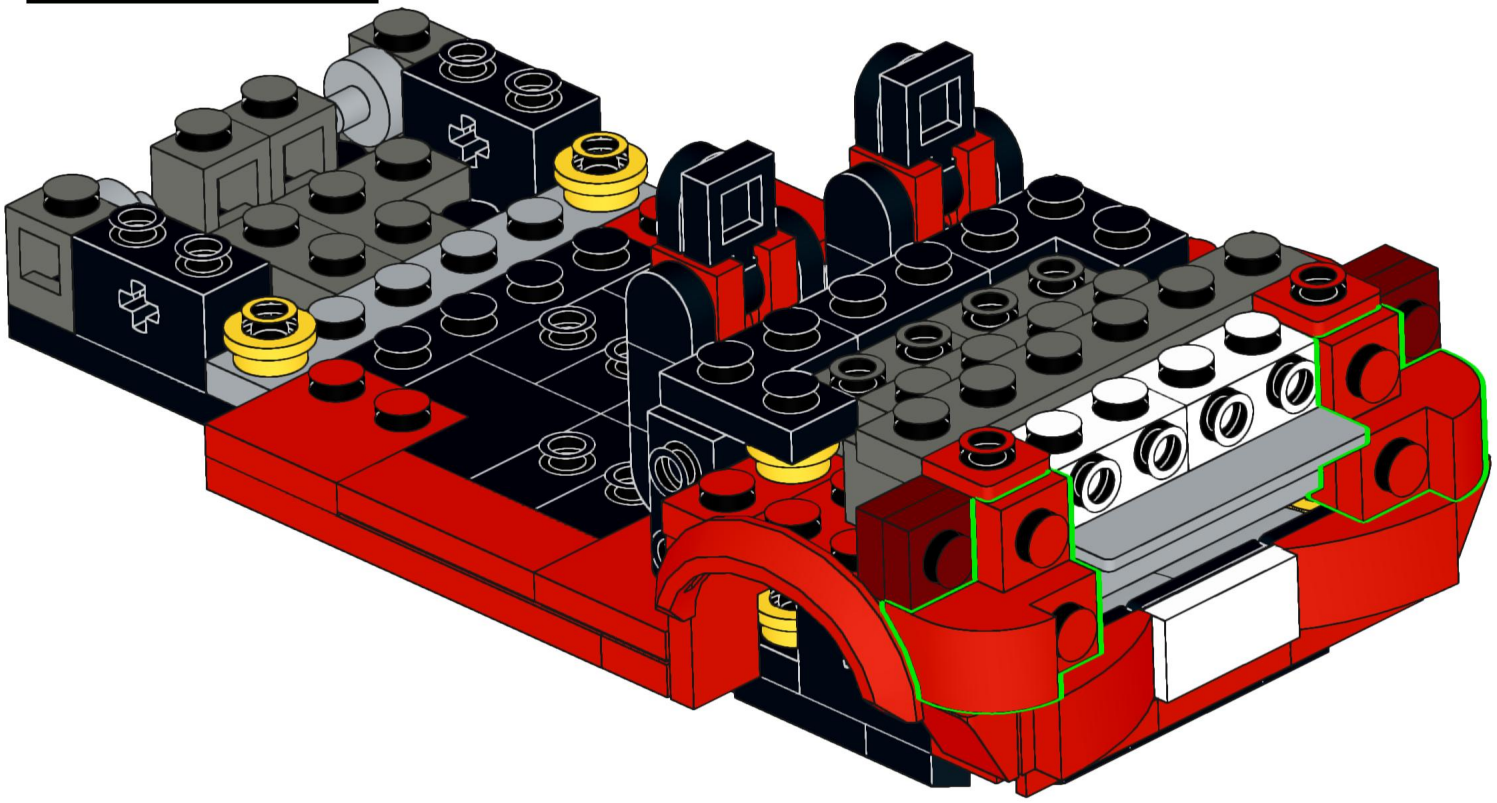

33

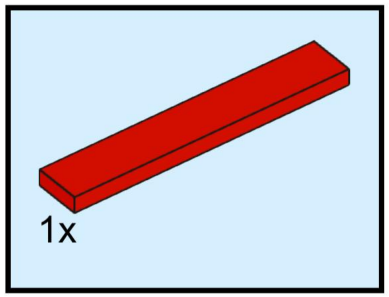

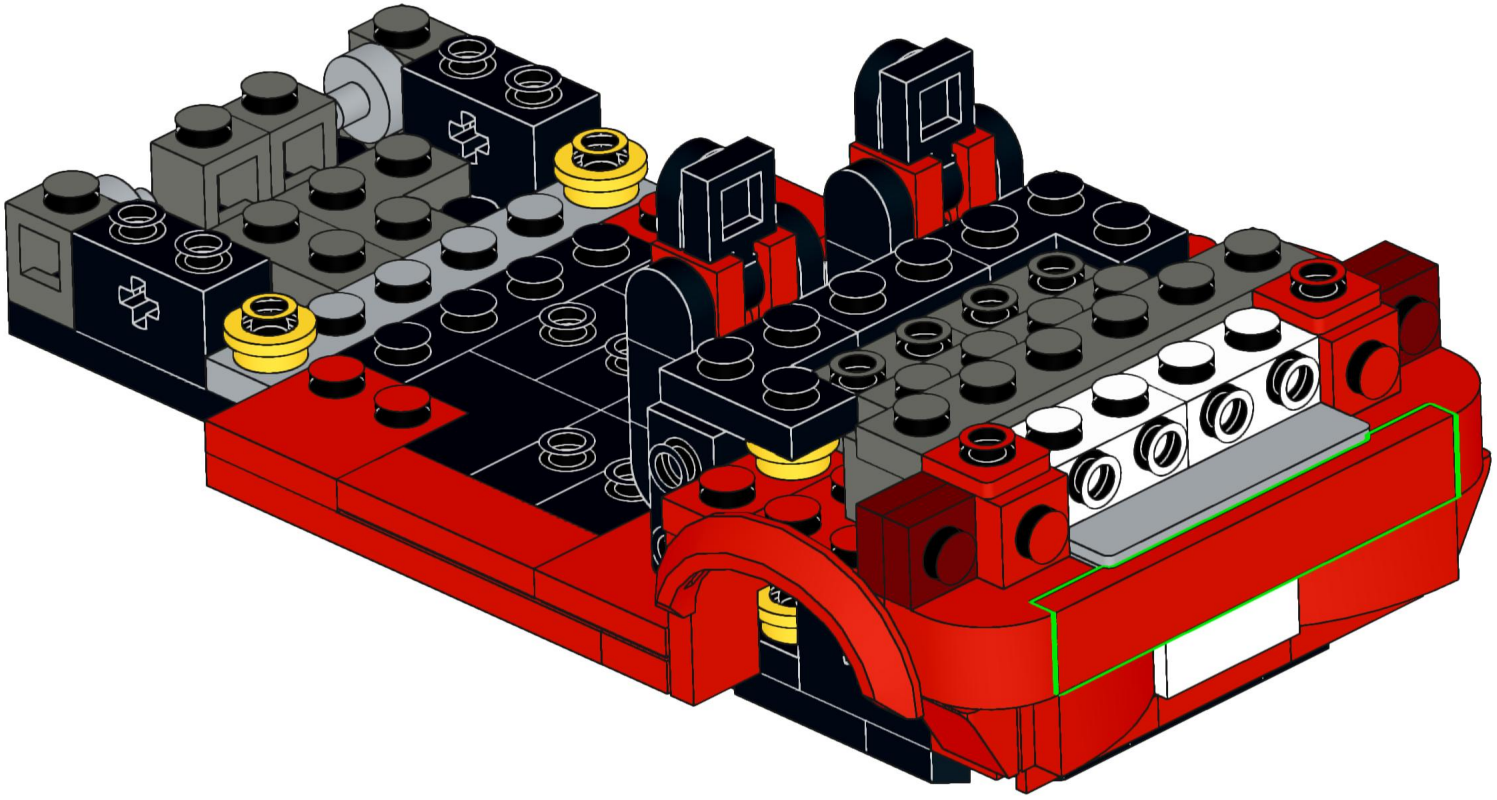

34

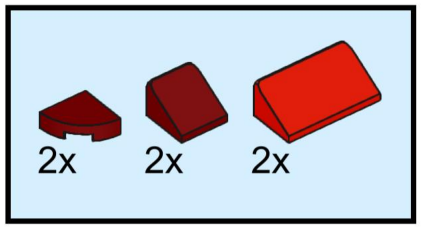

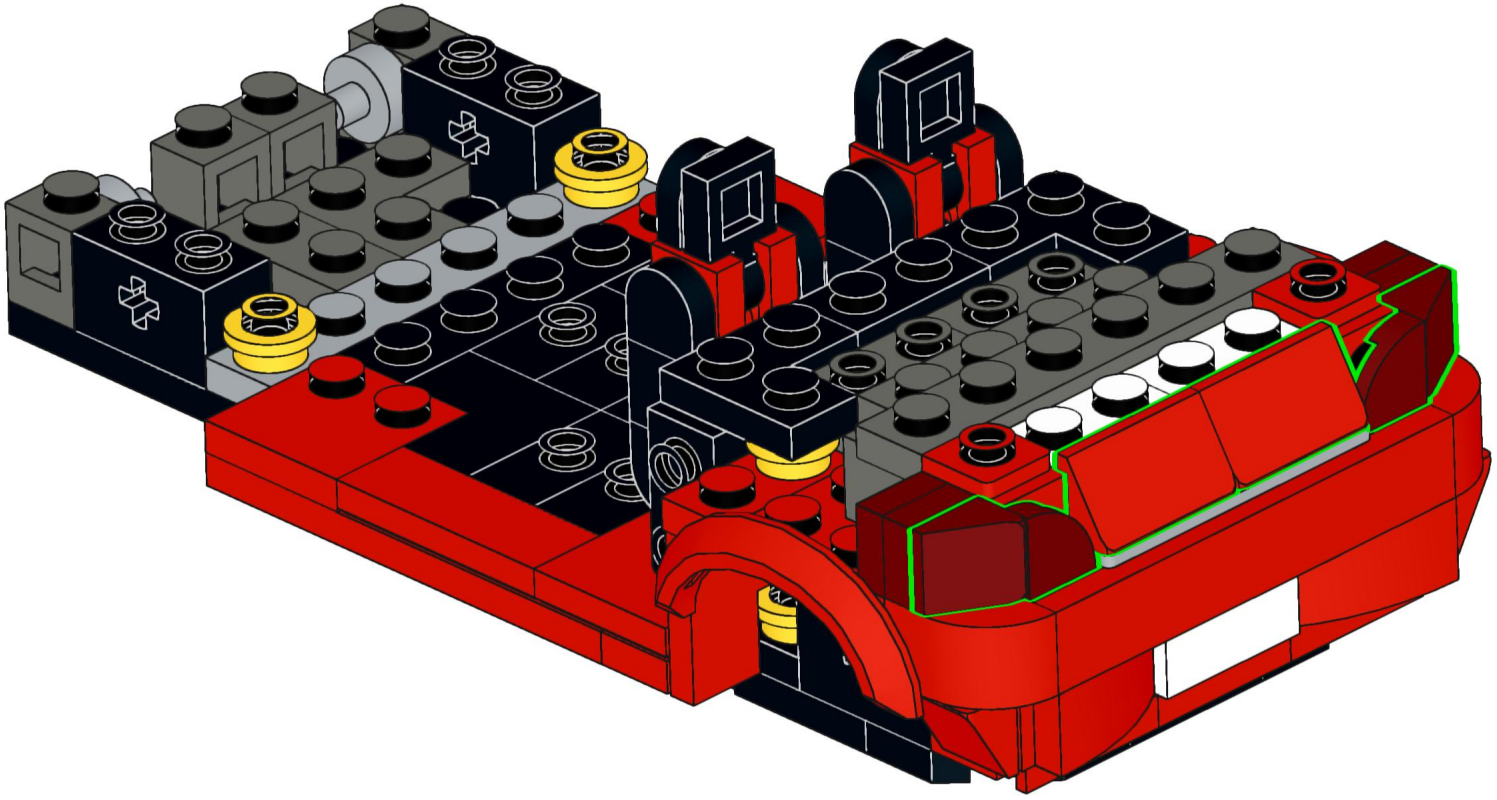

35

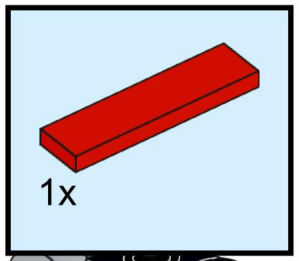

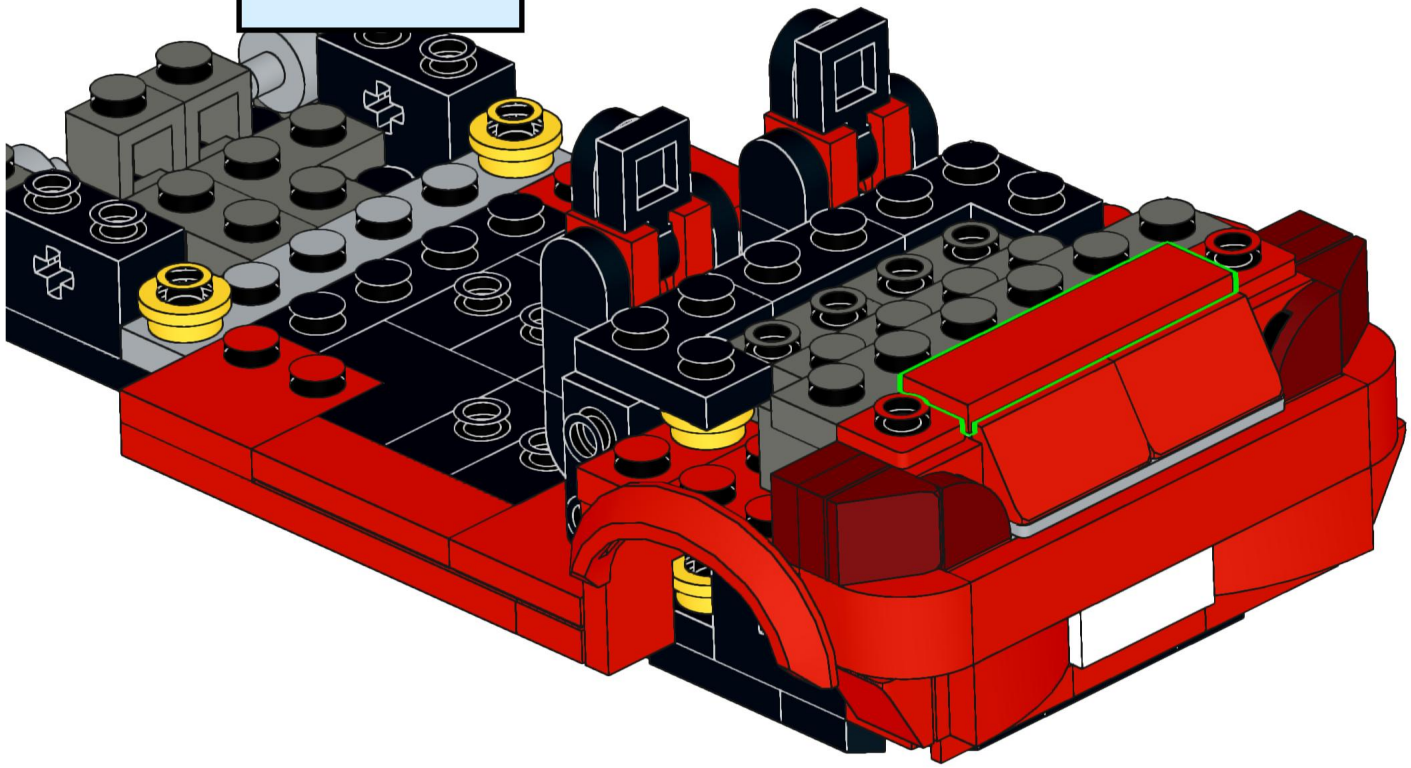

36

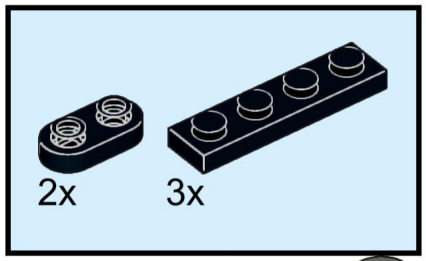

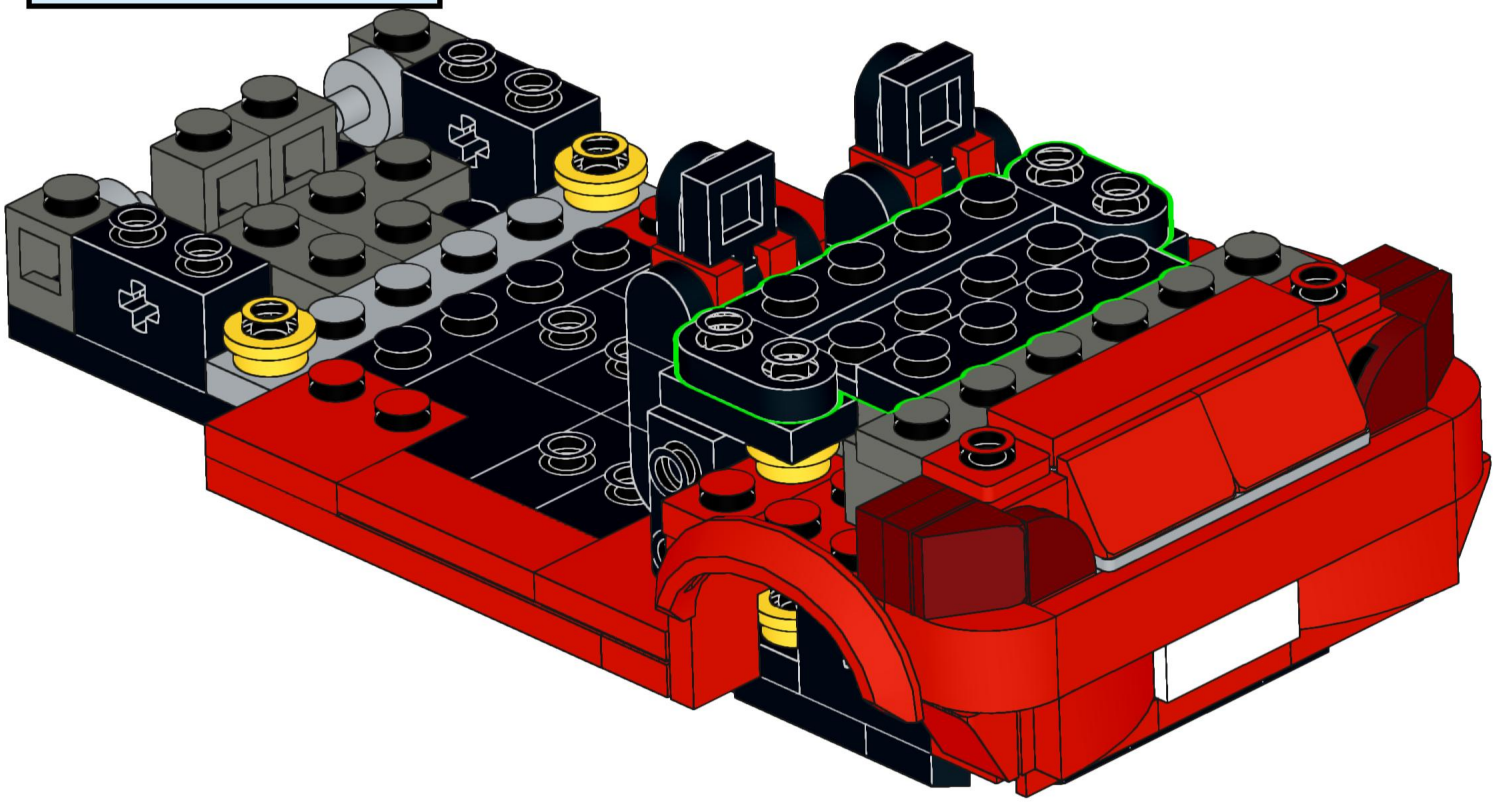

37

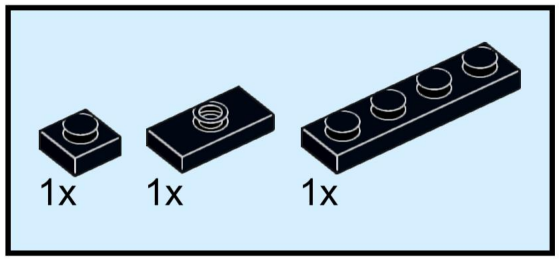

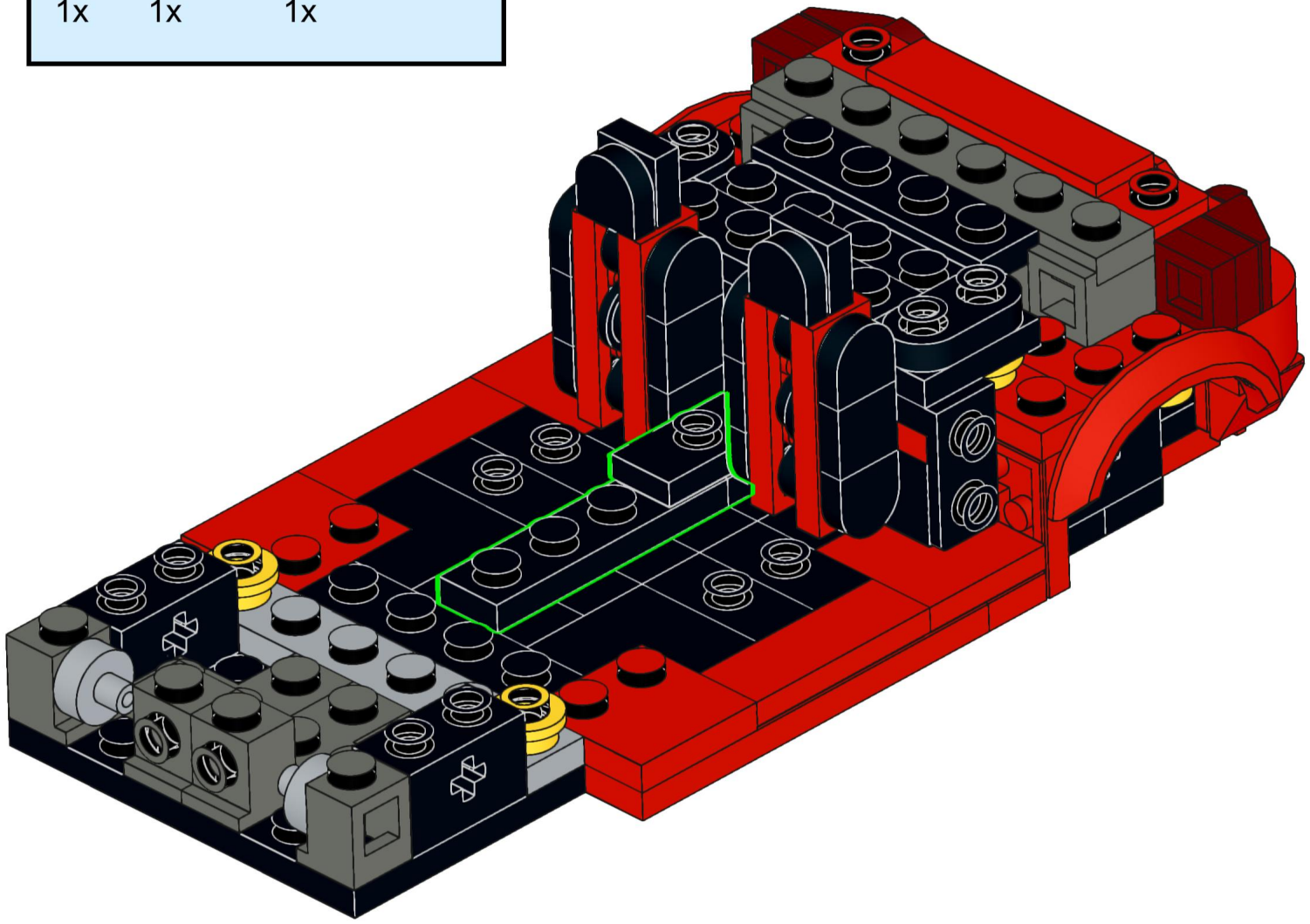

38

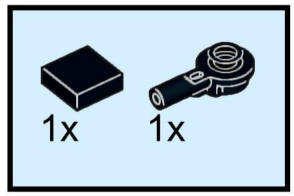

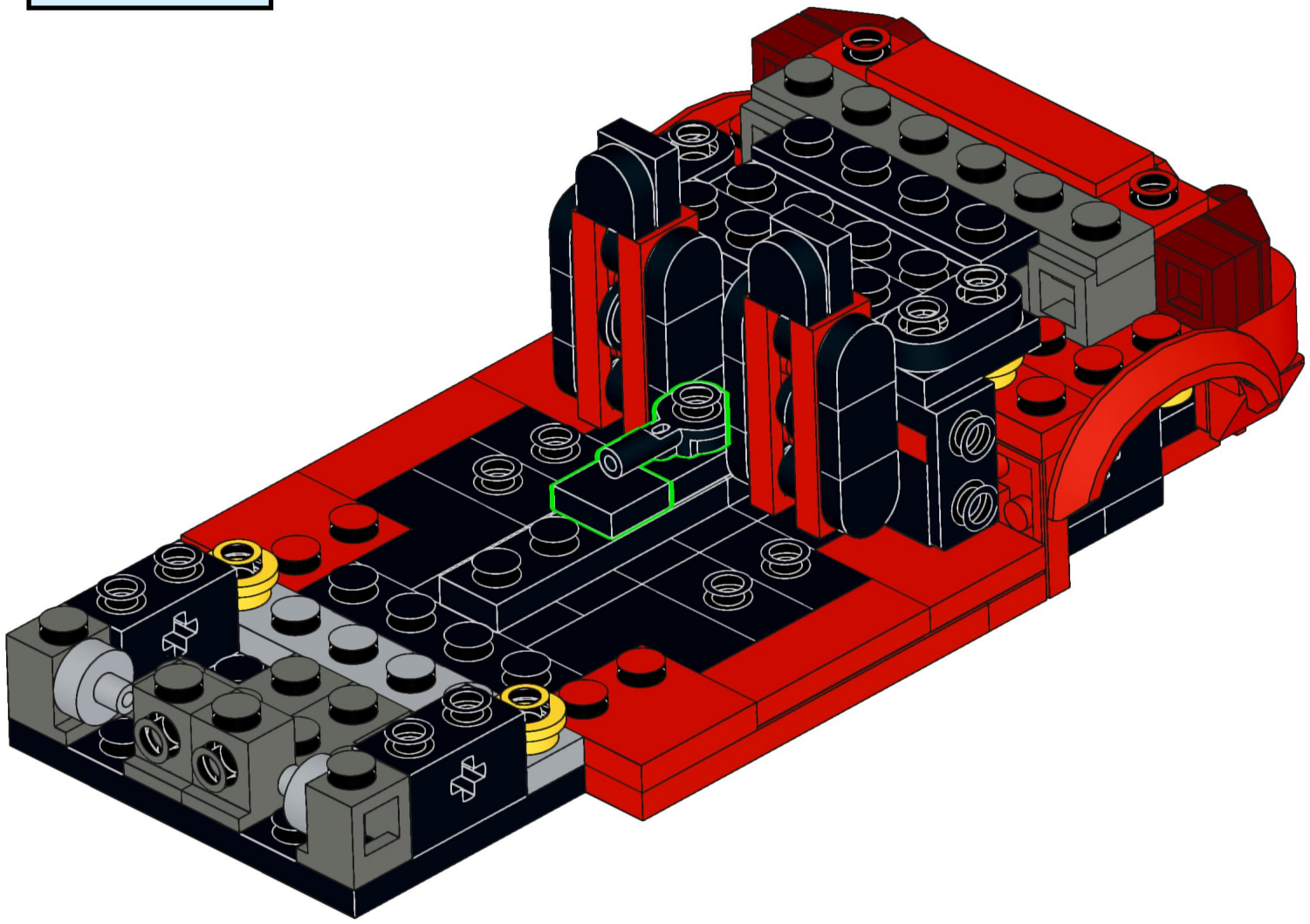

39

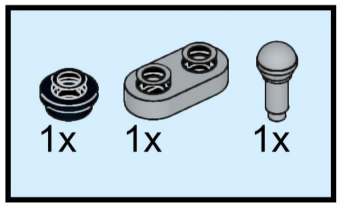

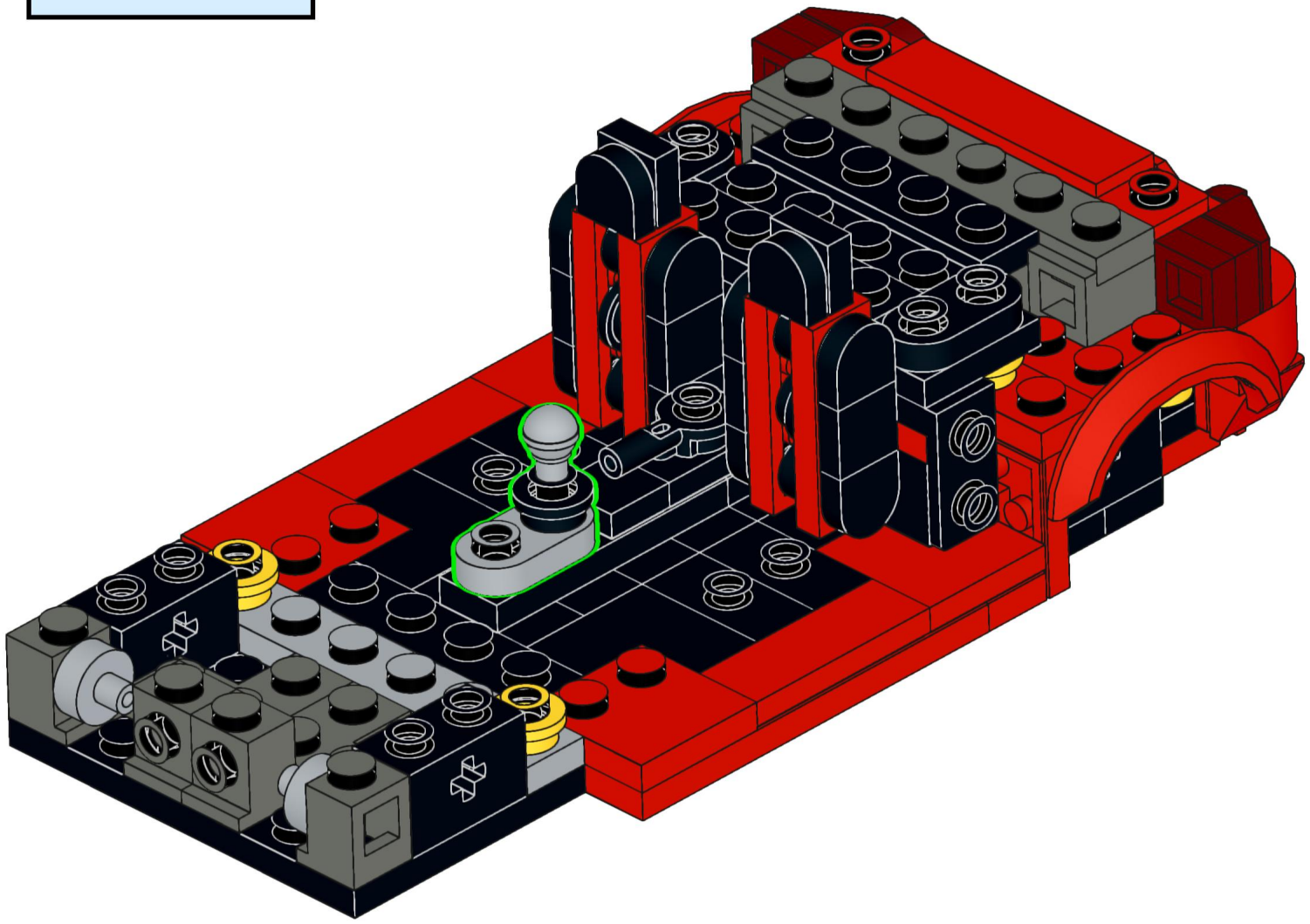

40

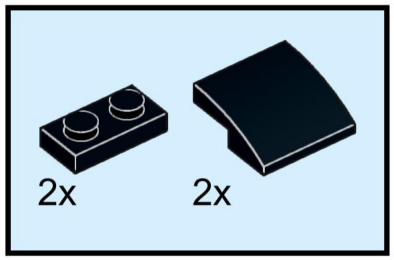

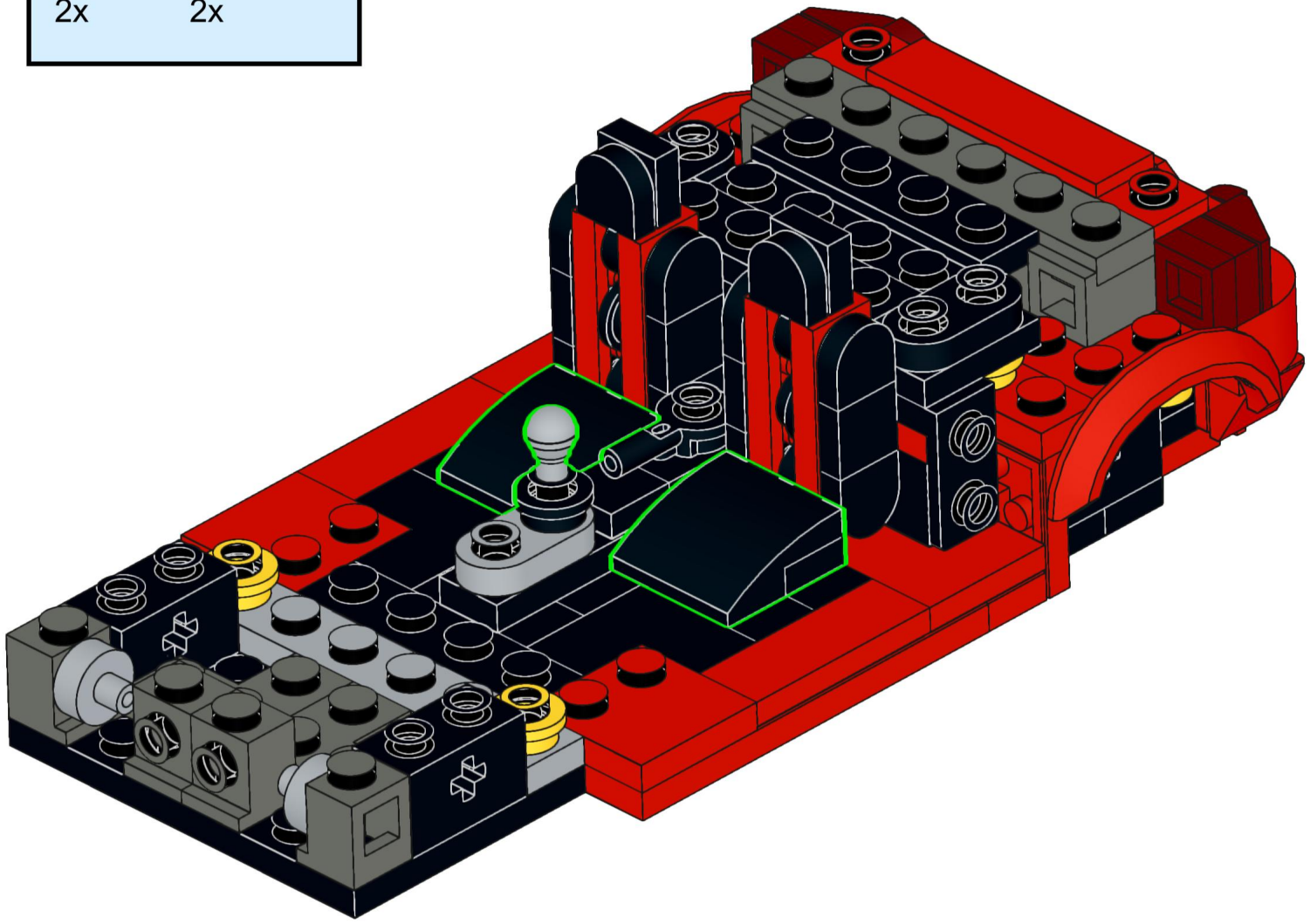

41

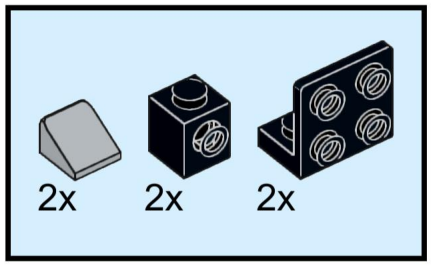

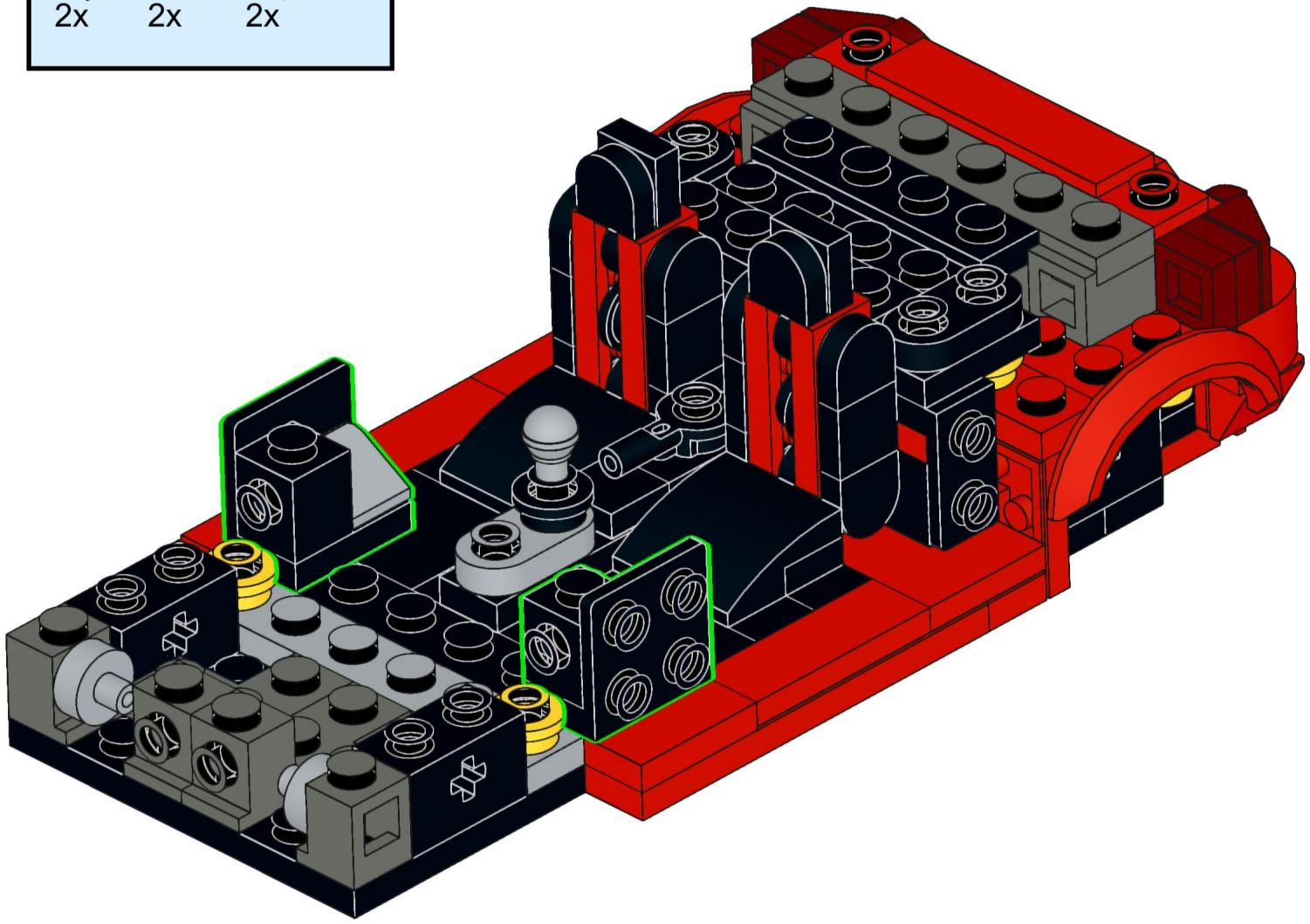

42

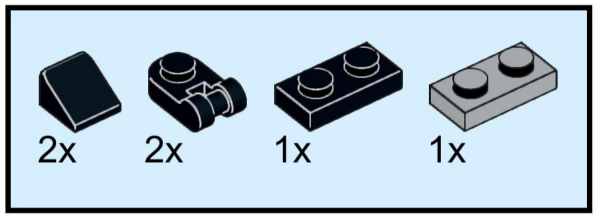

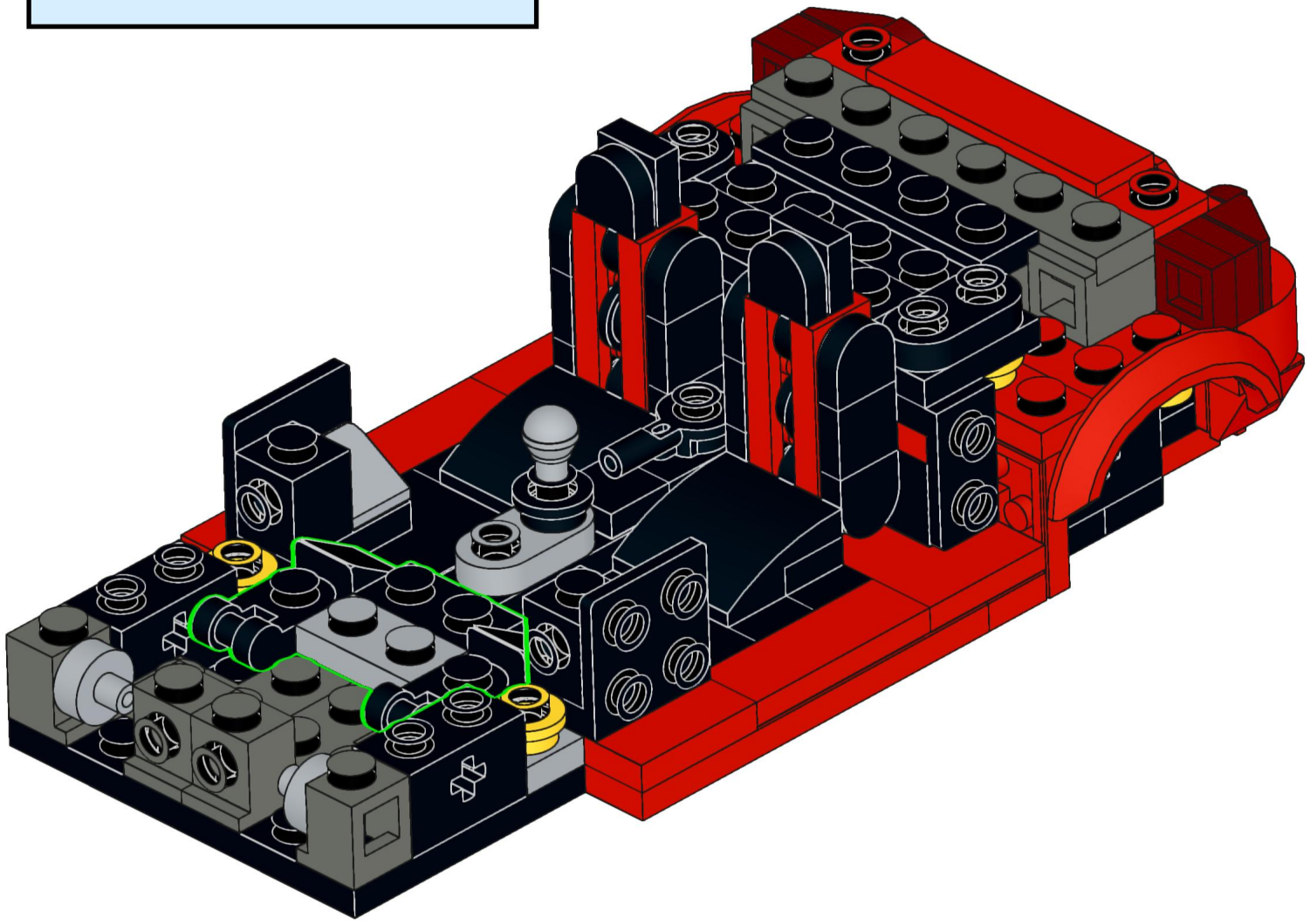

43

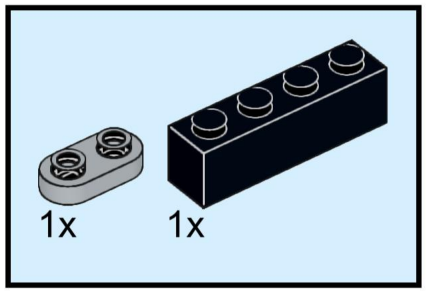

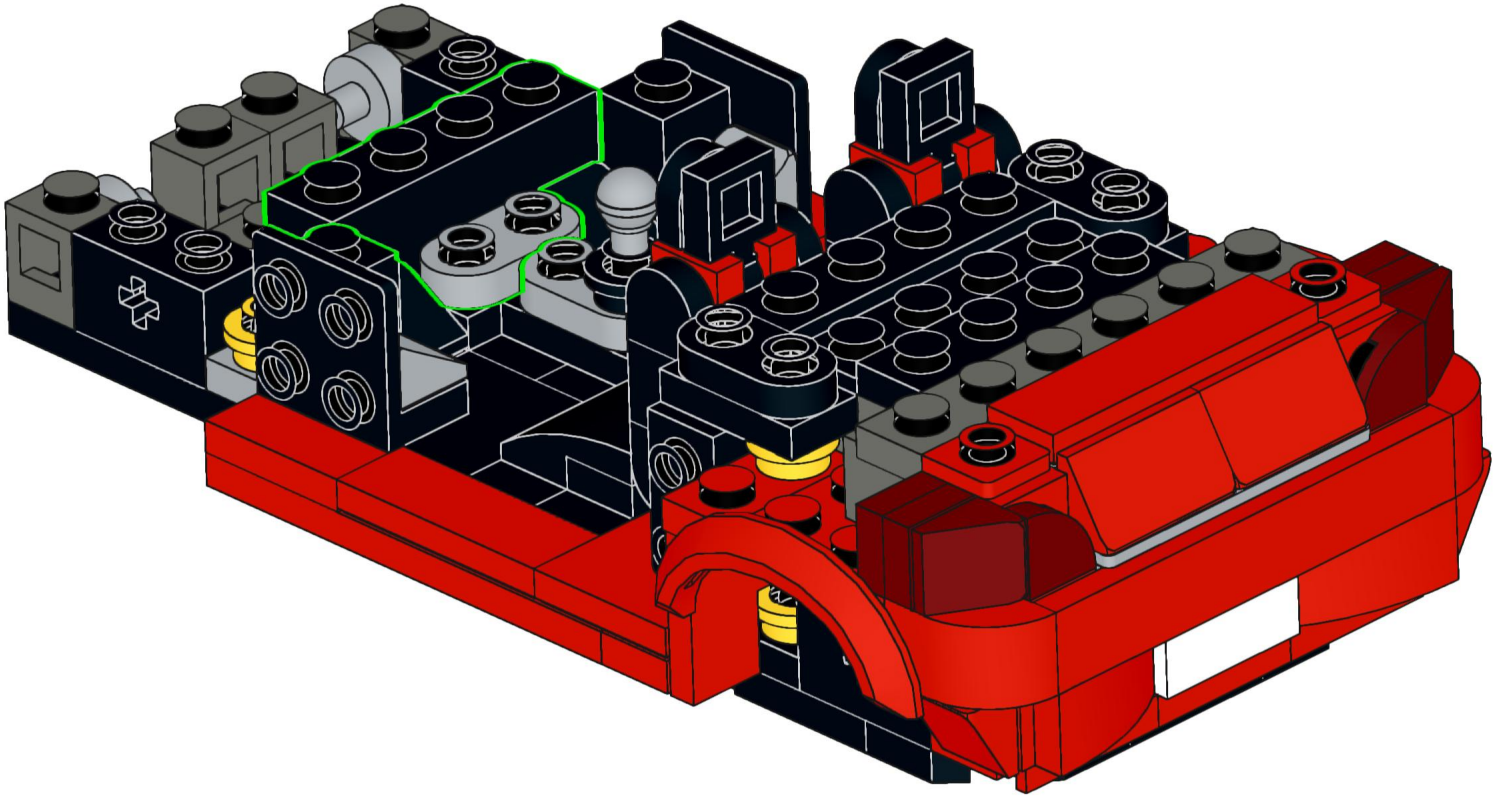

44

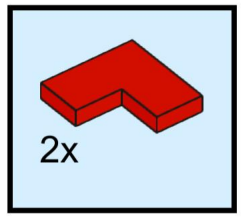

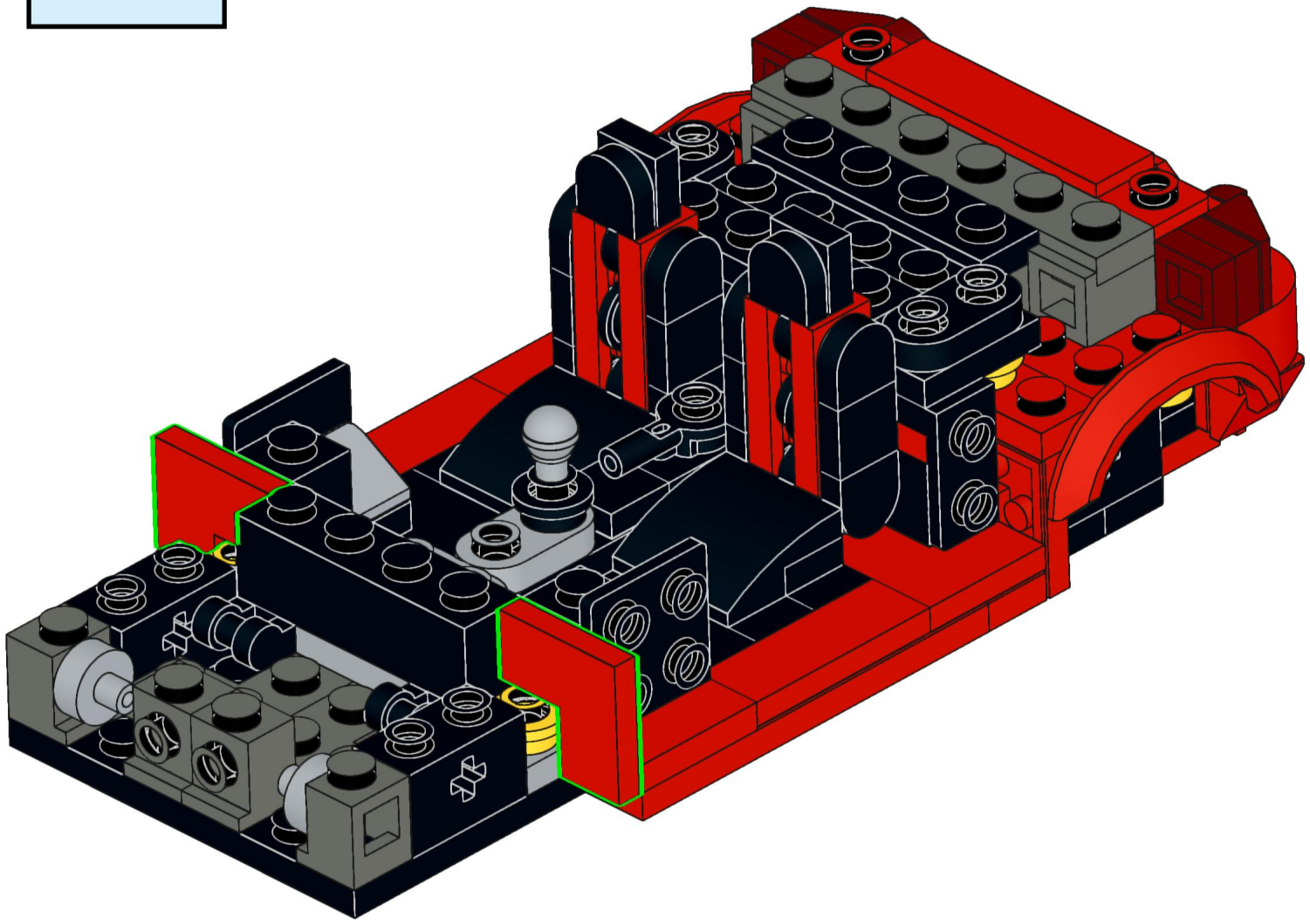

45

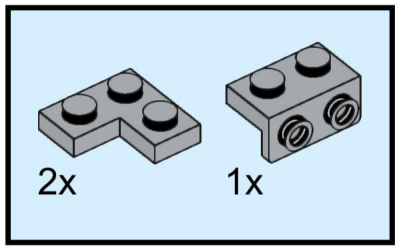

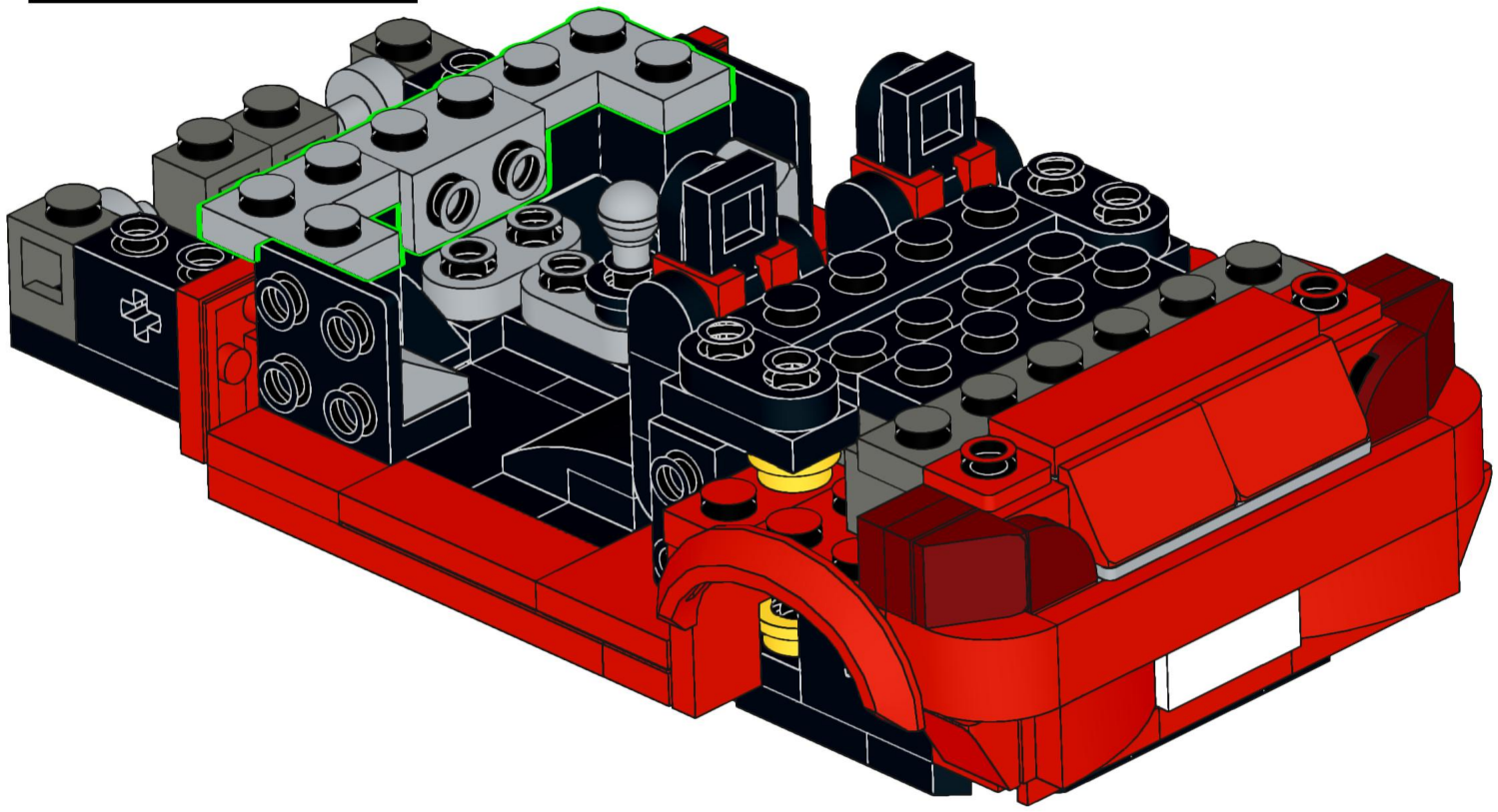

46

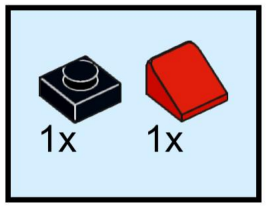

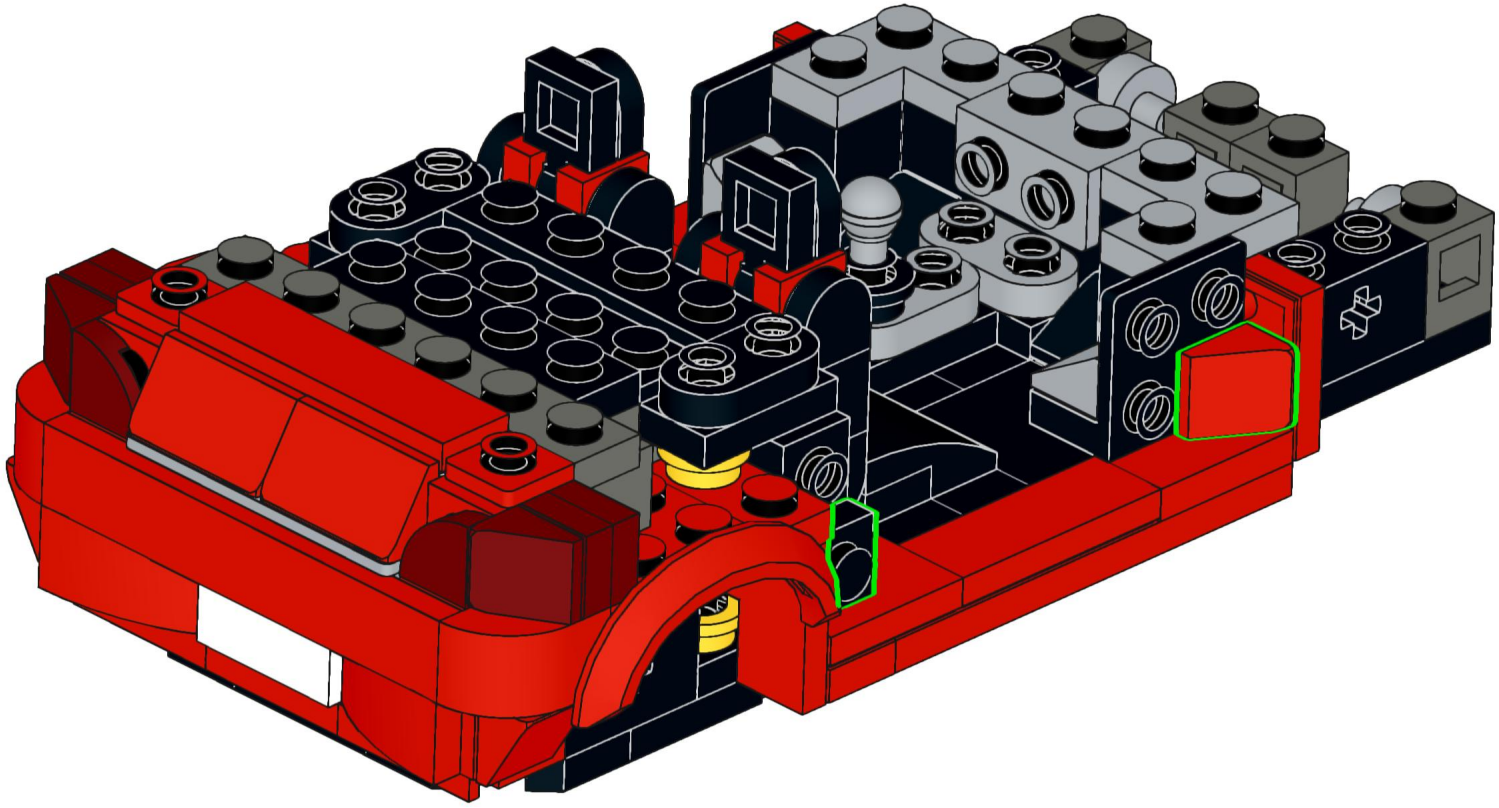

47

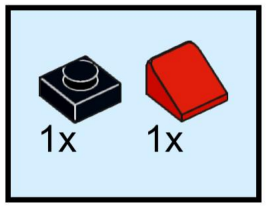

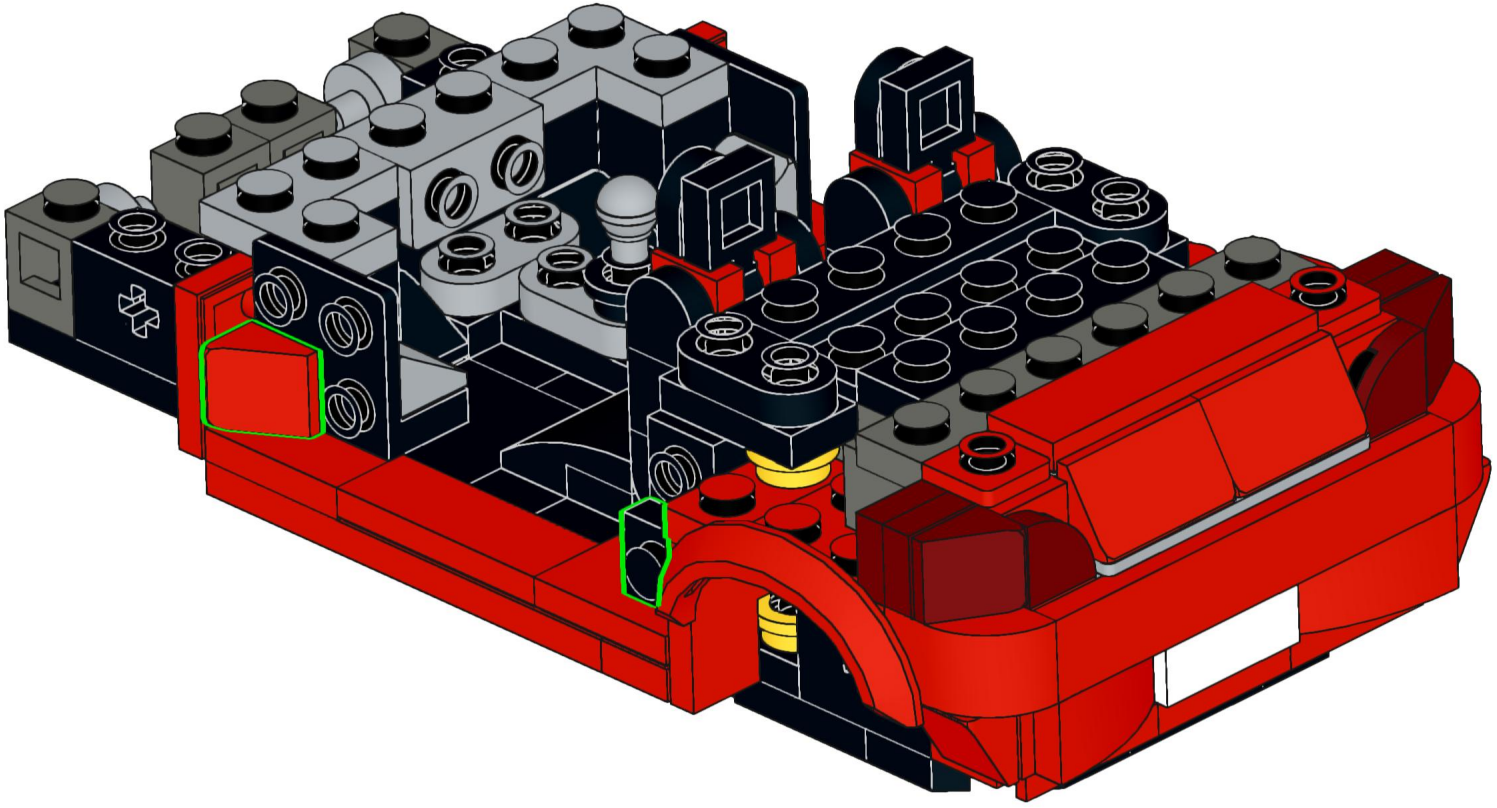

48

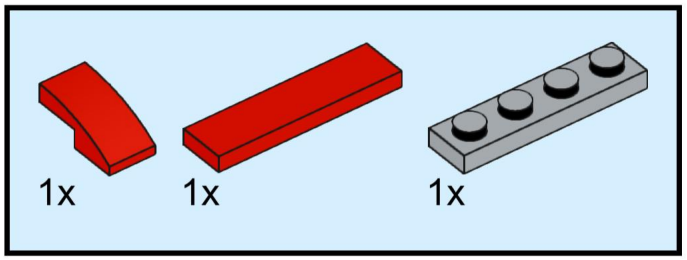

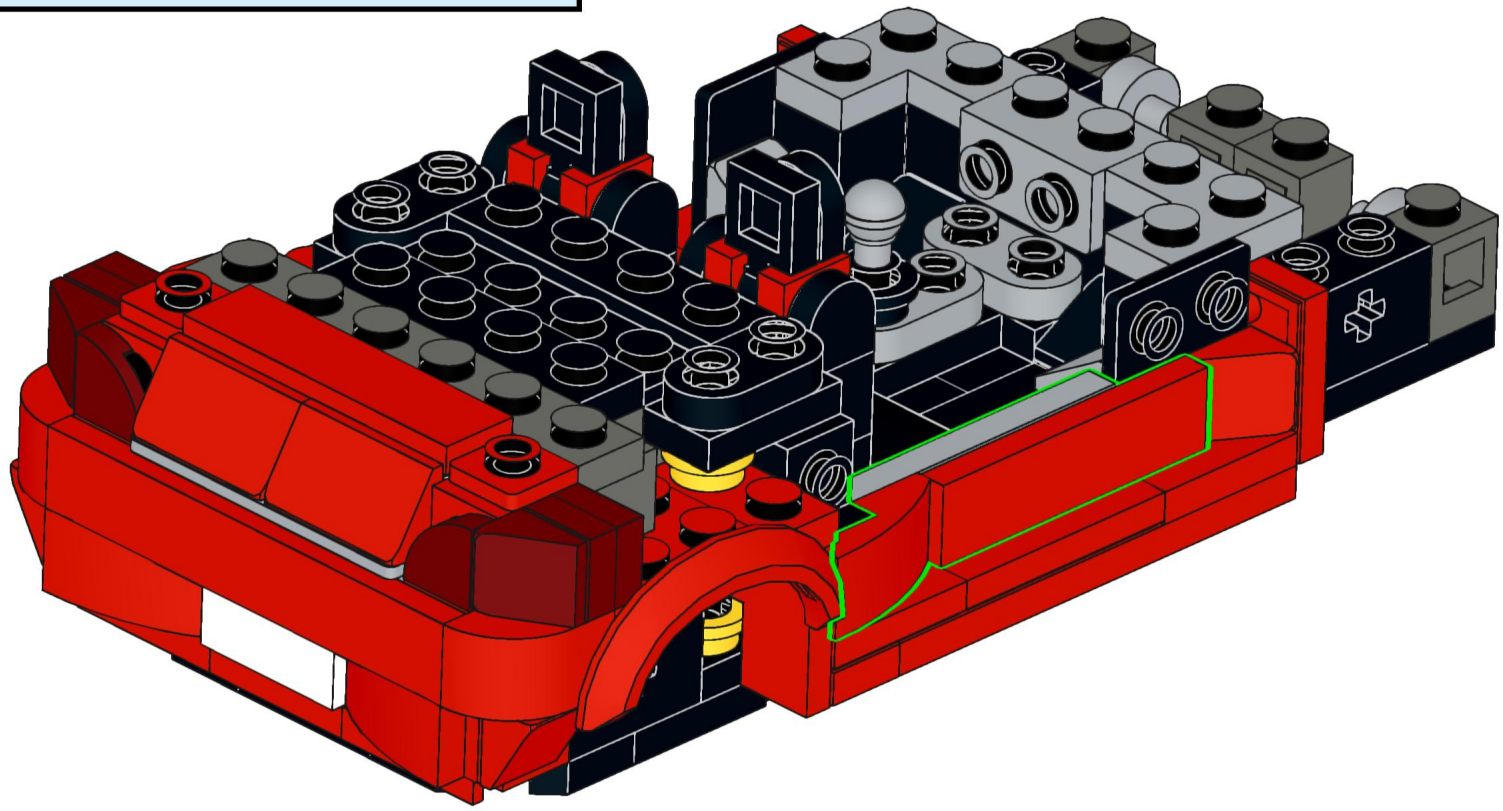

49

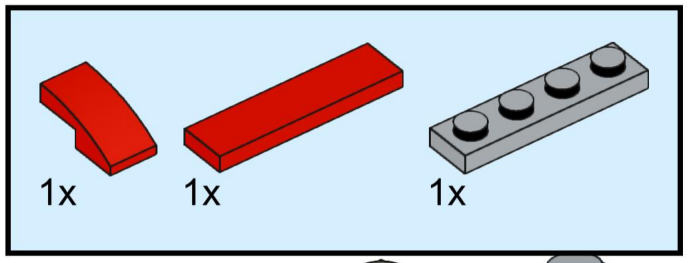

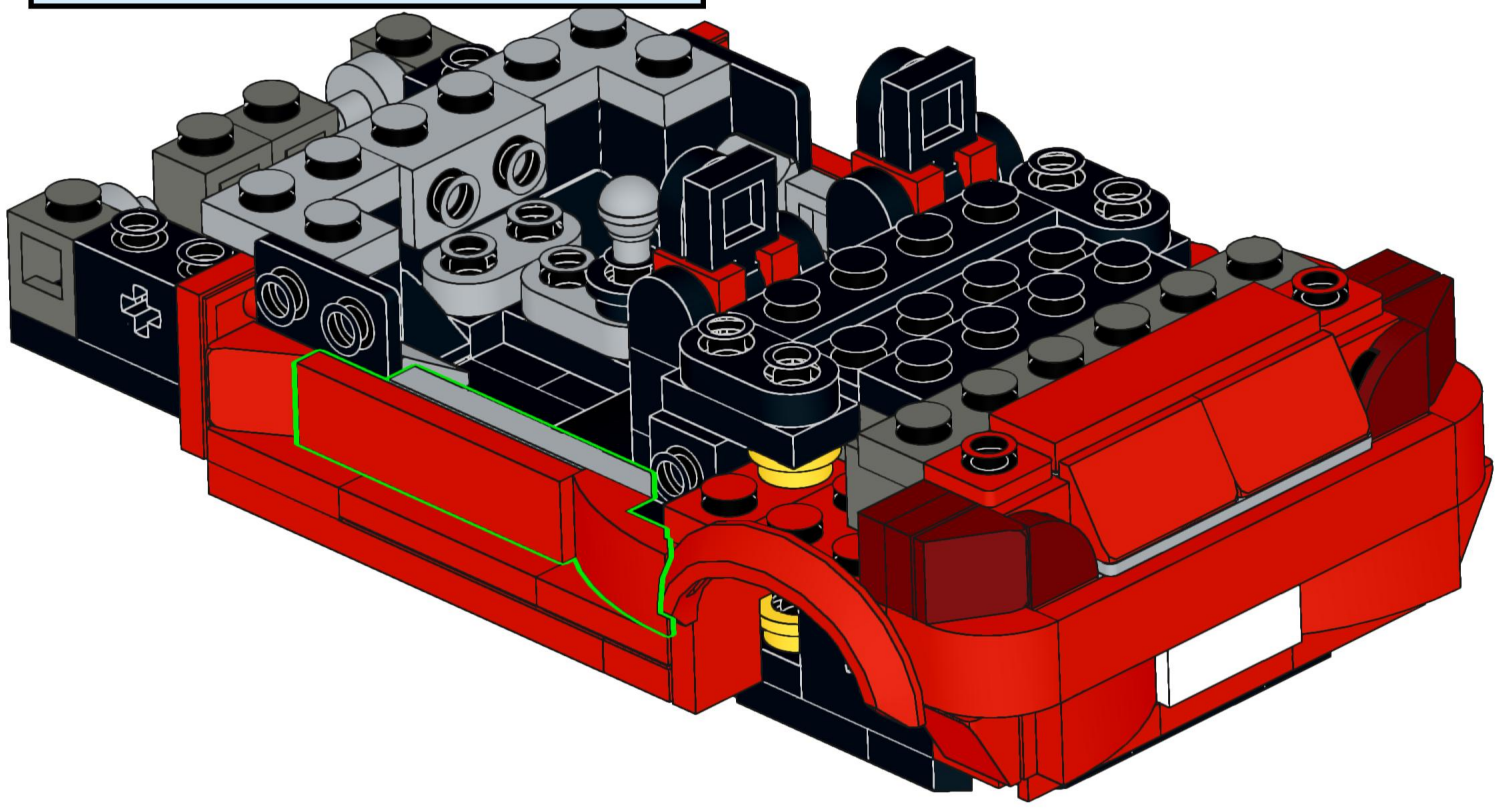

50

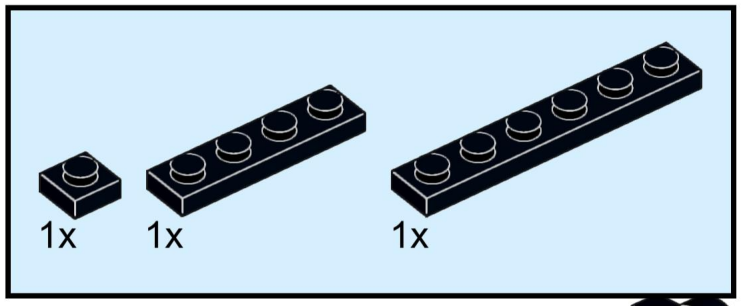

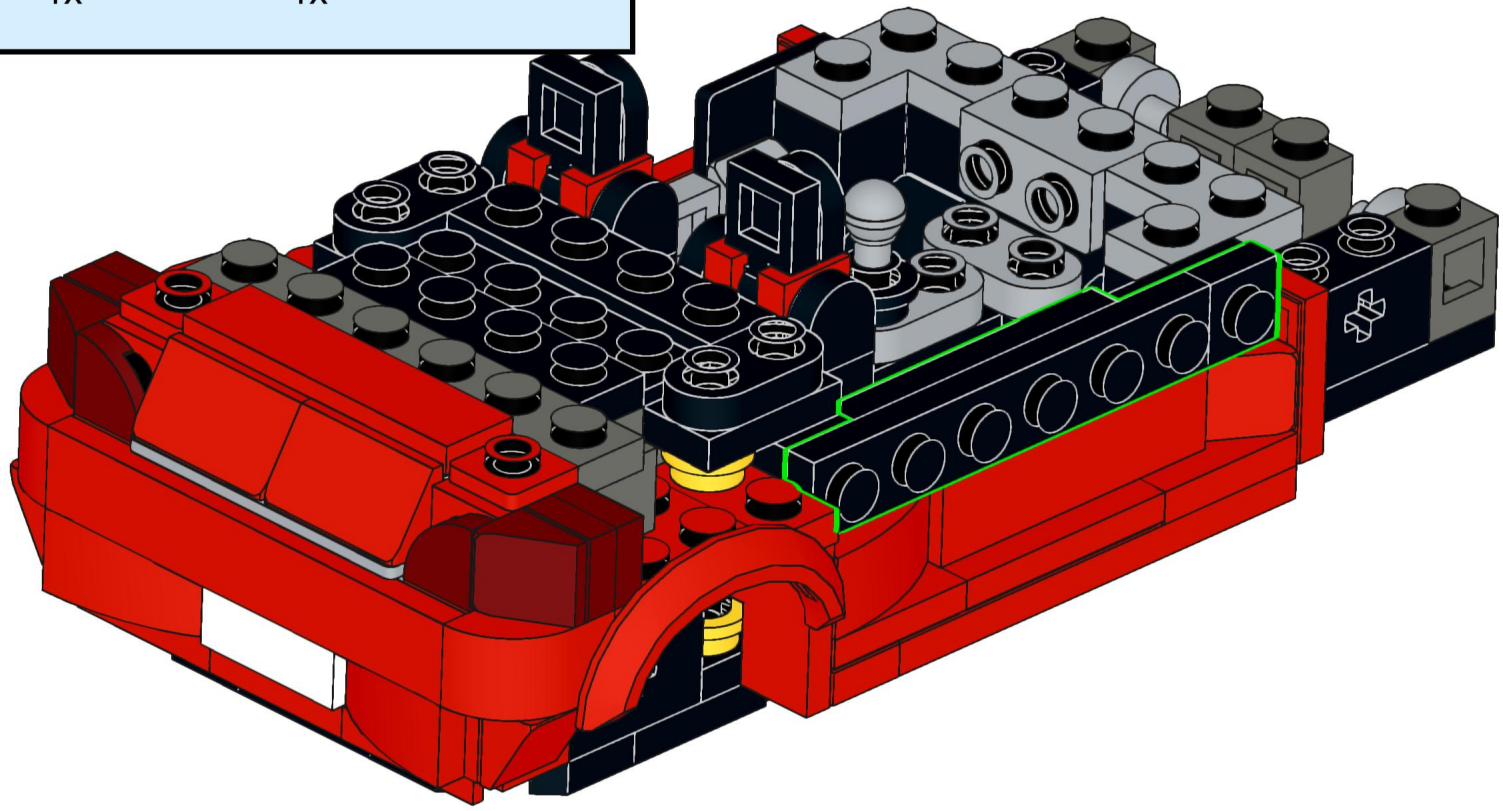

51

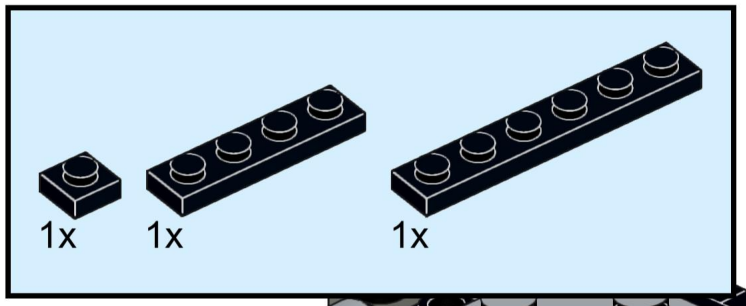

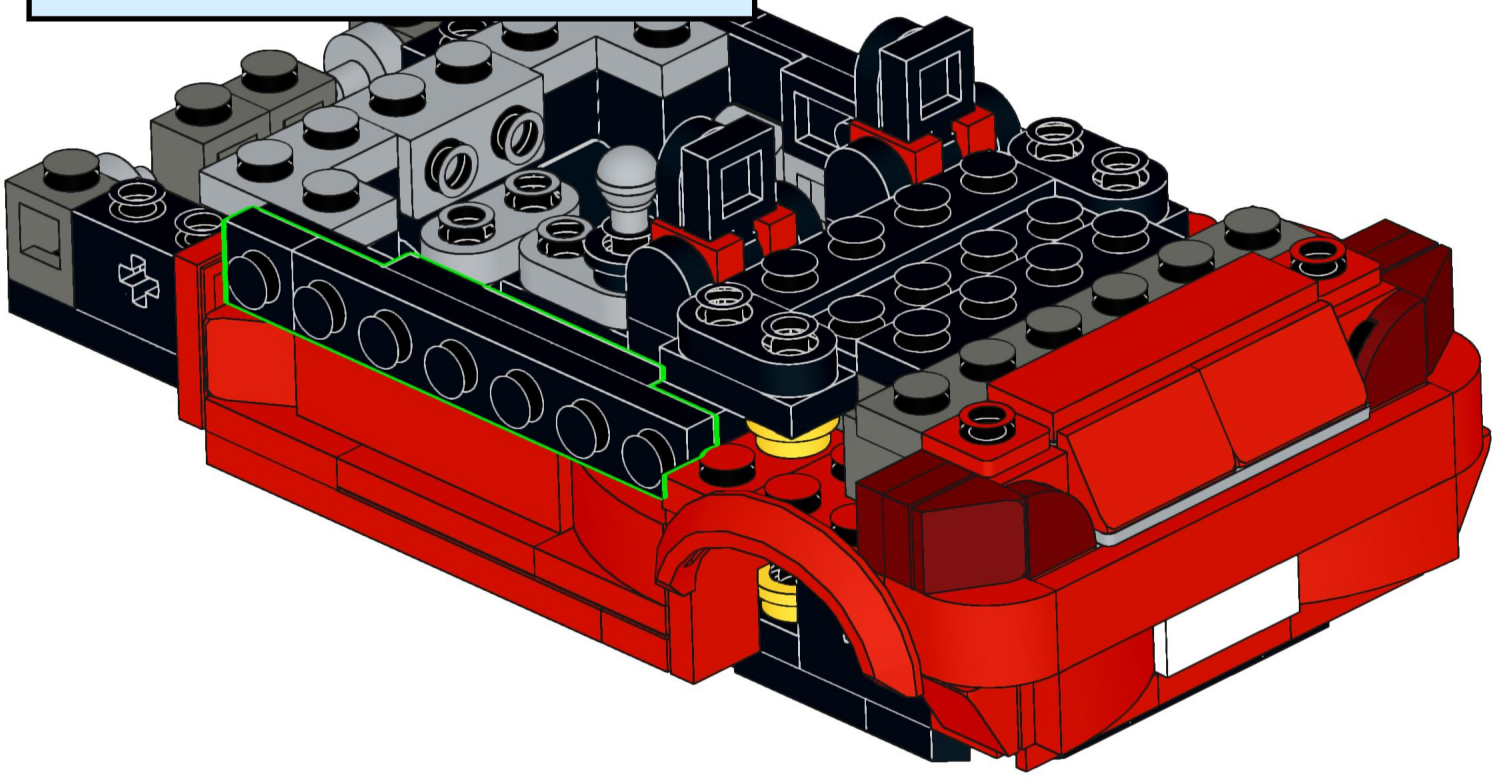

52

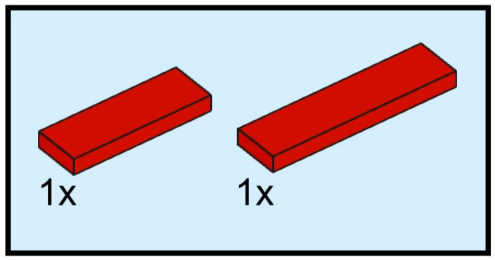

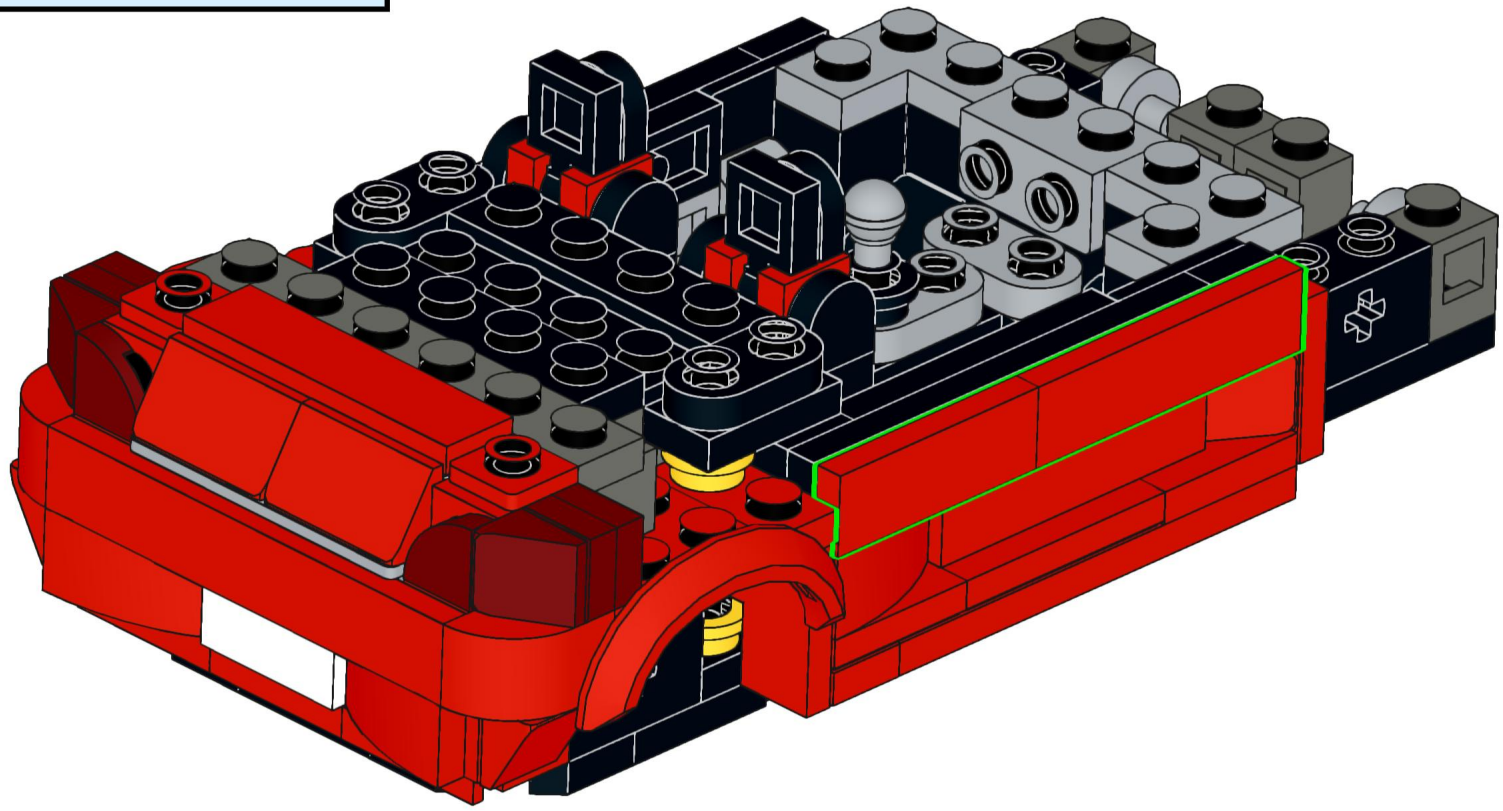

53

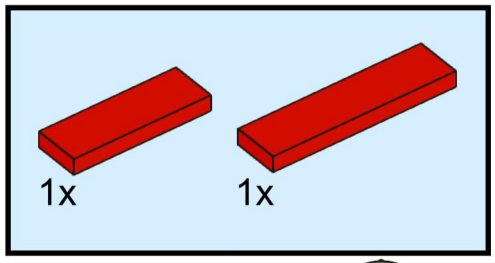

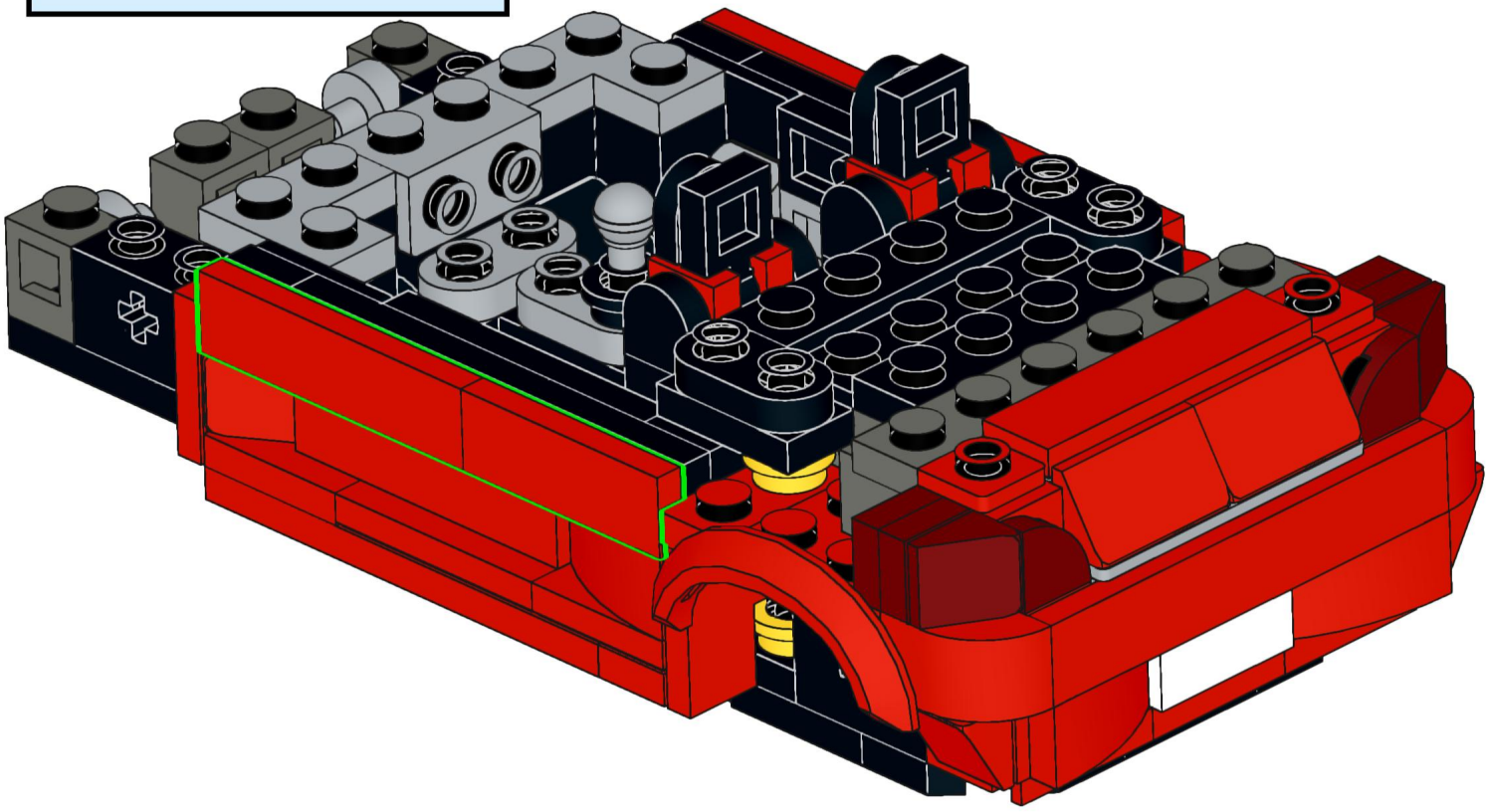

54

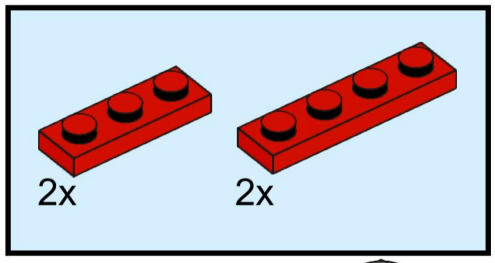

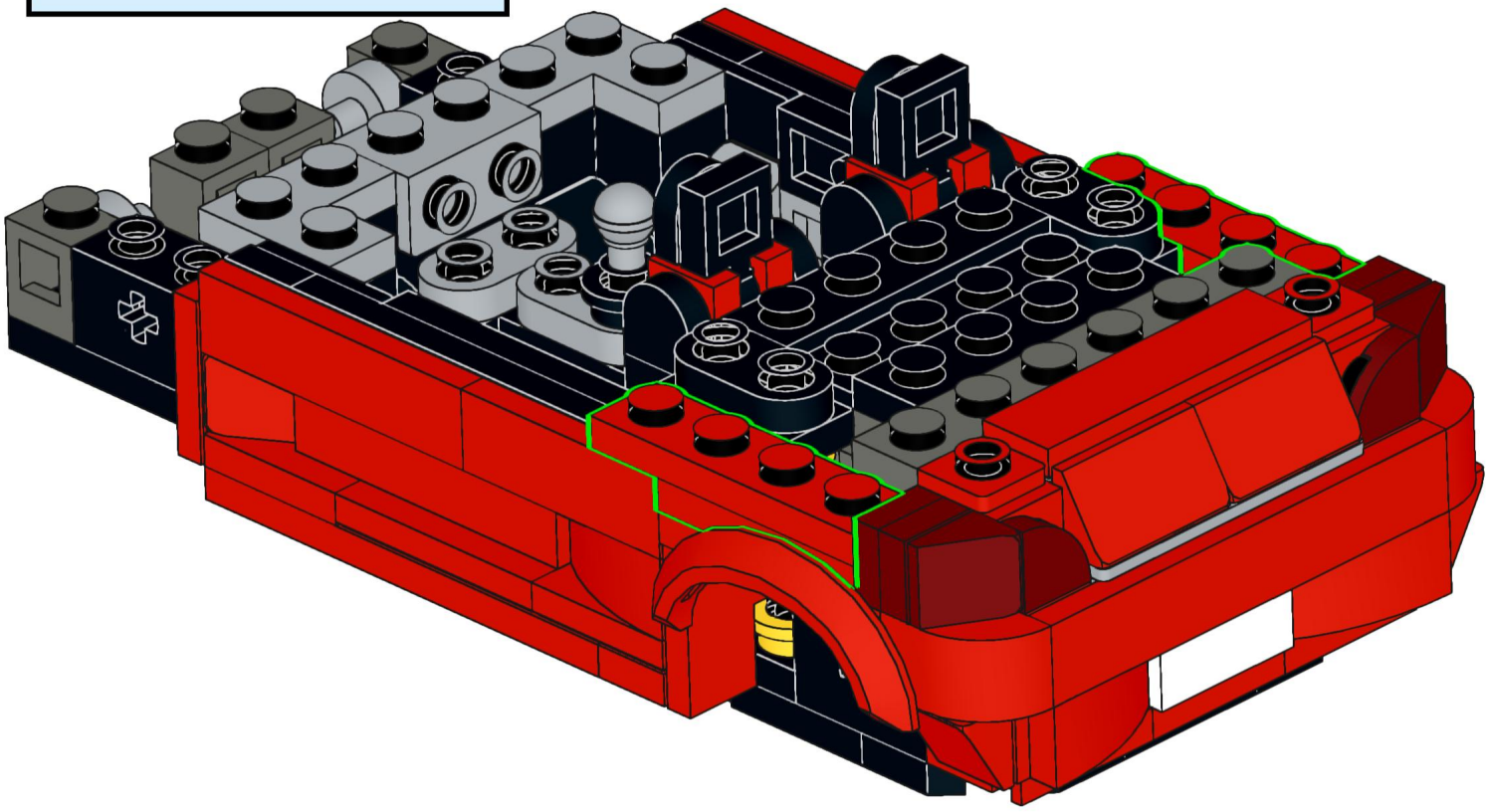

55

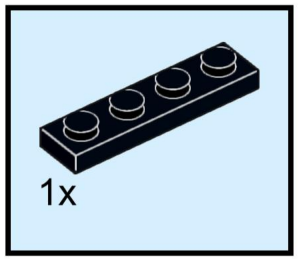

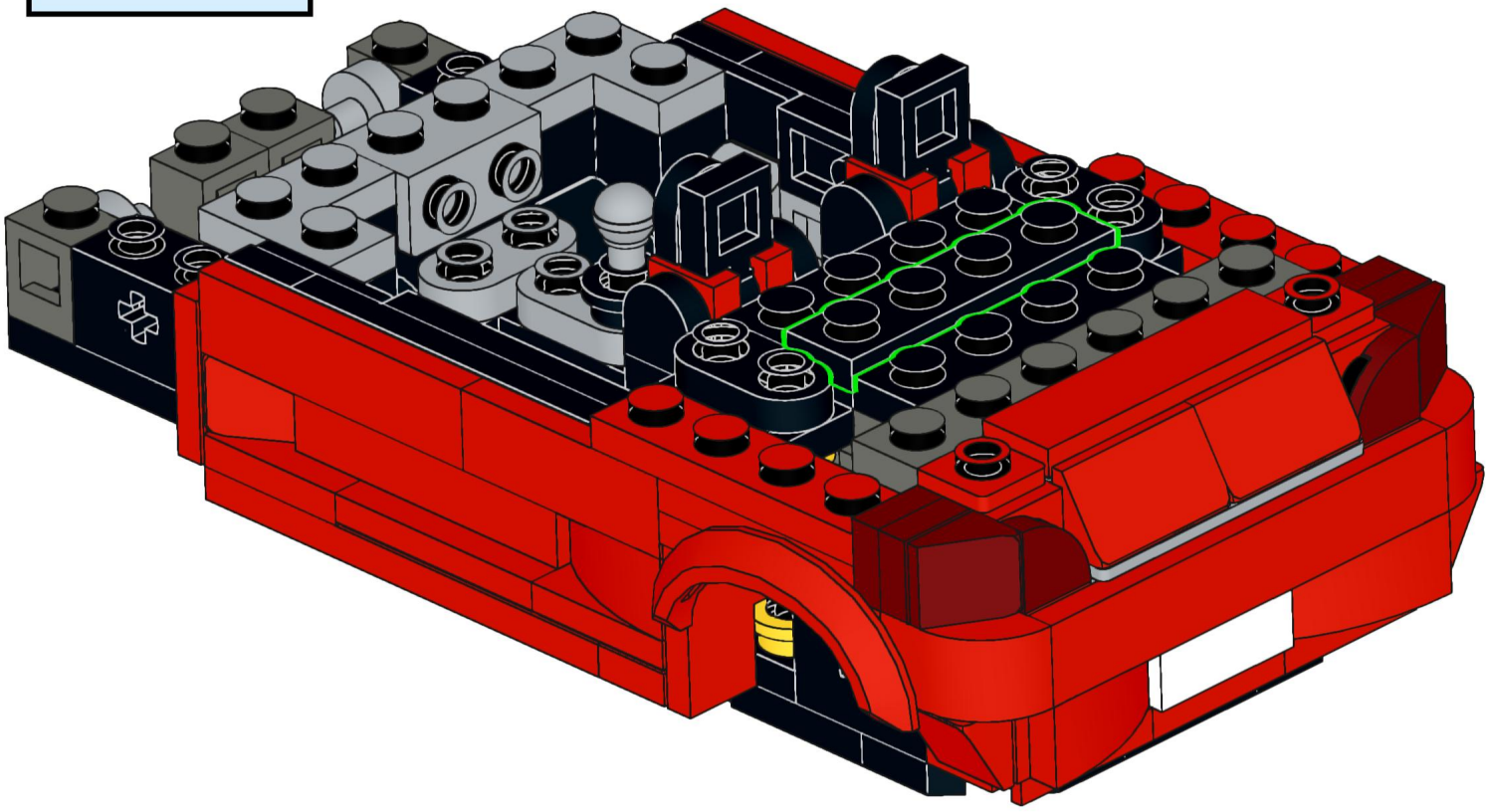

56

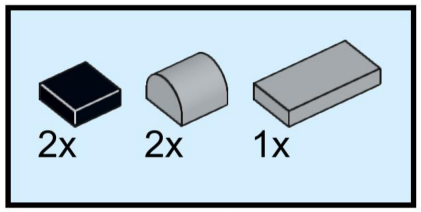

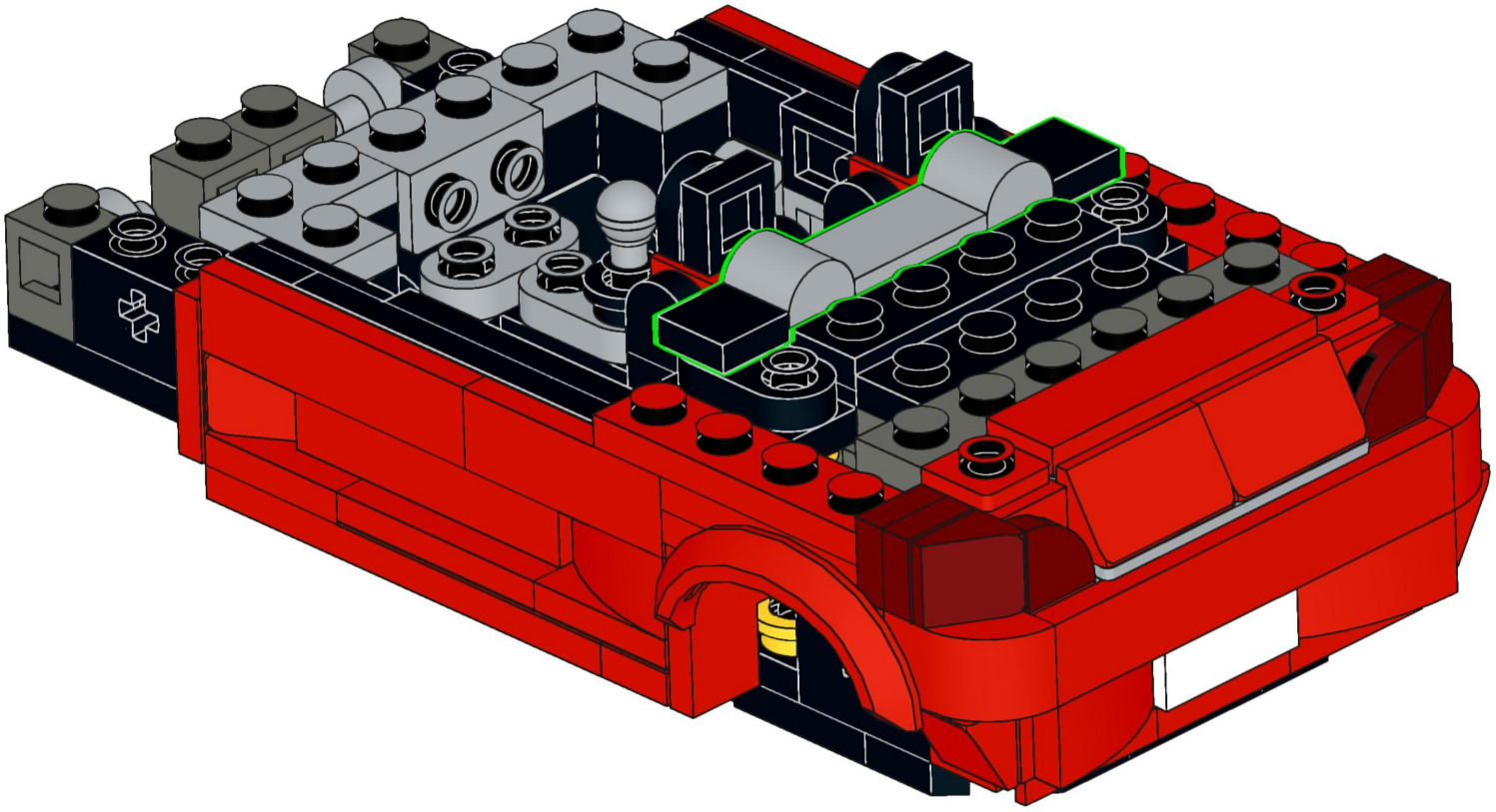

57

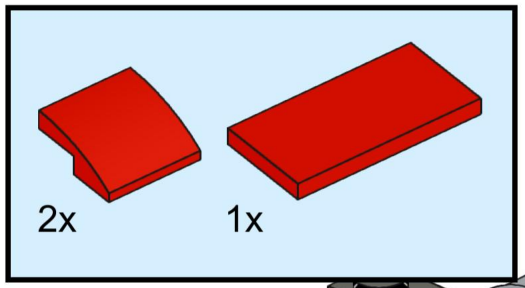

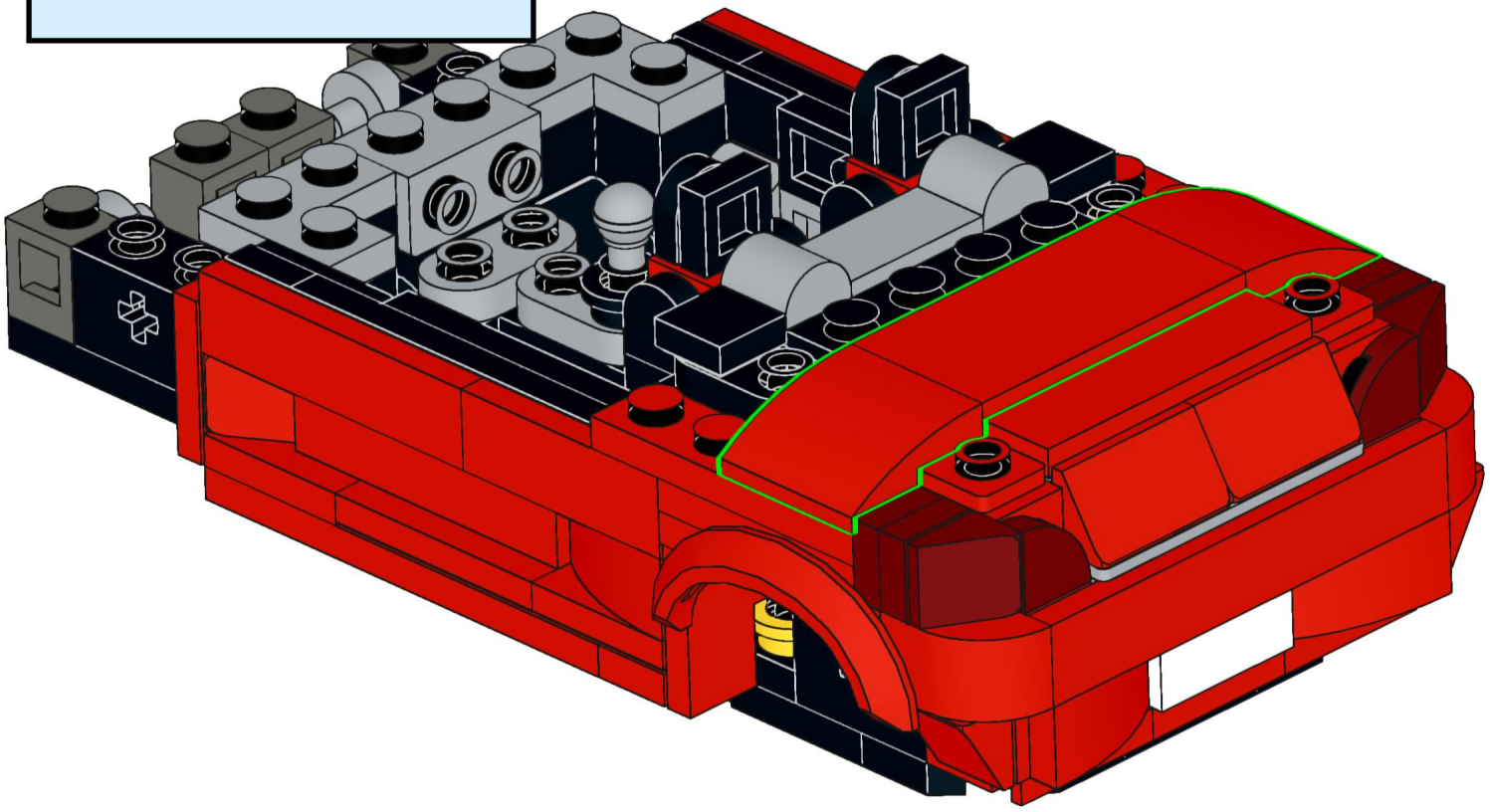

58

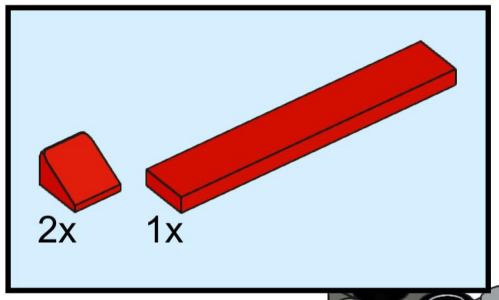

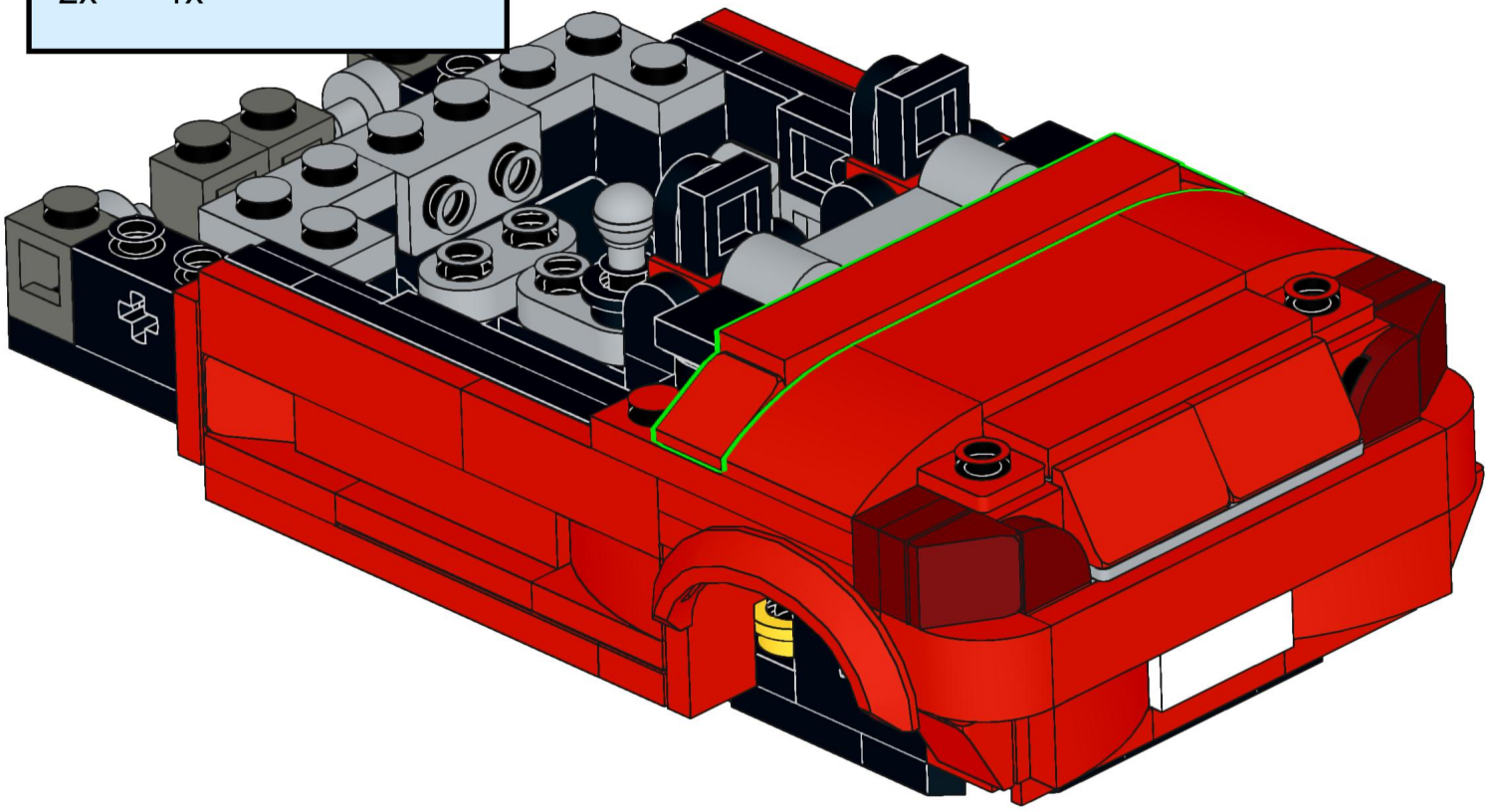

59

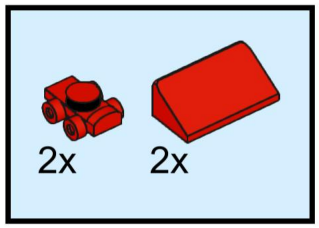

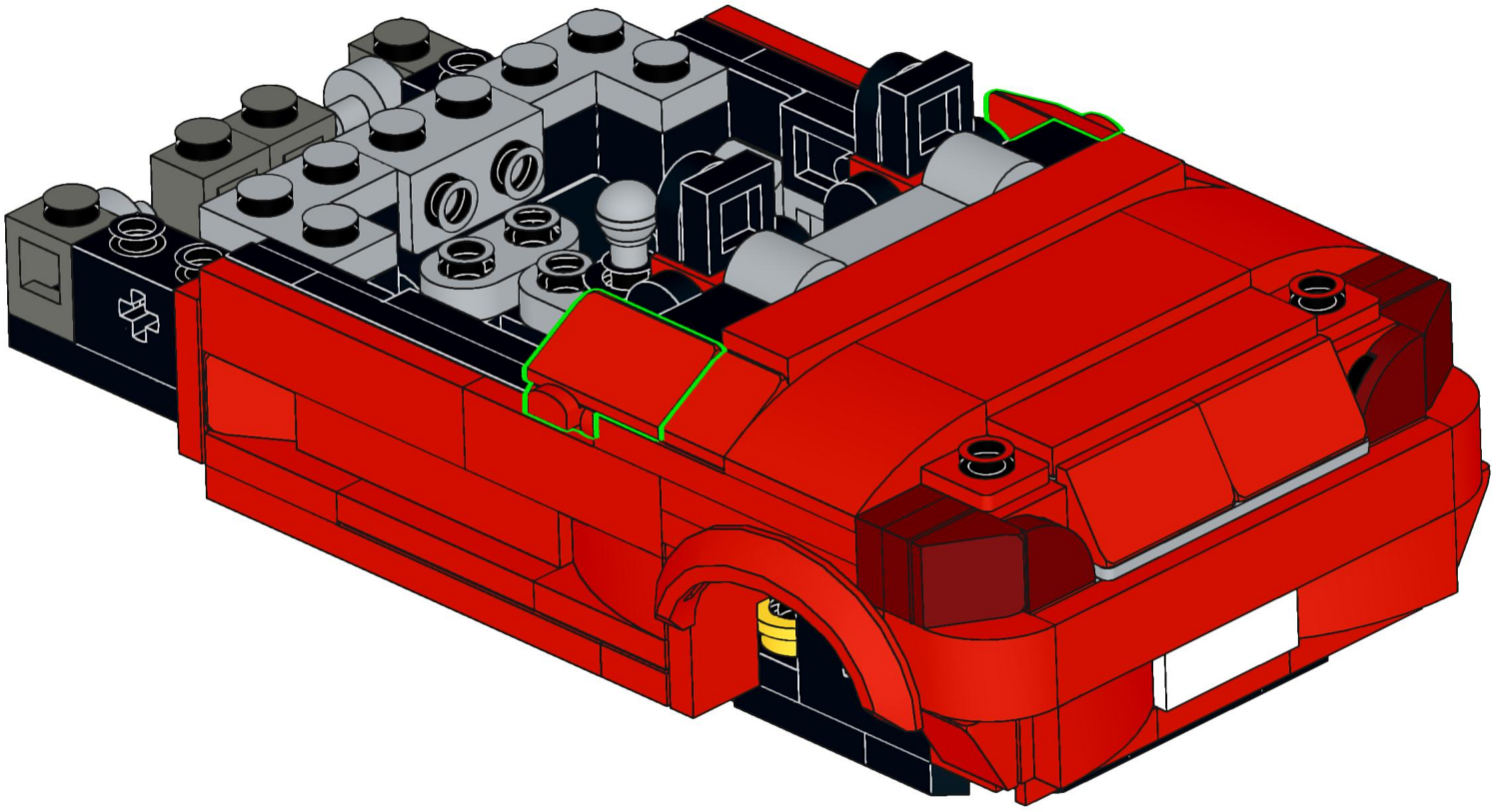

60

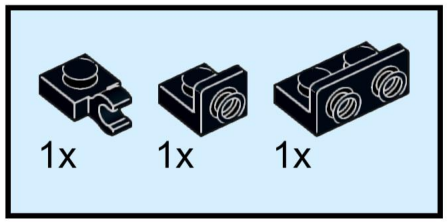

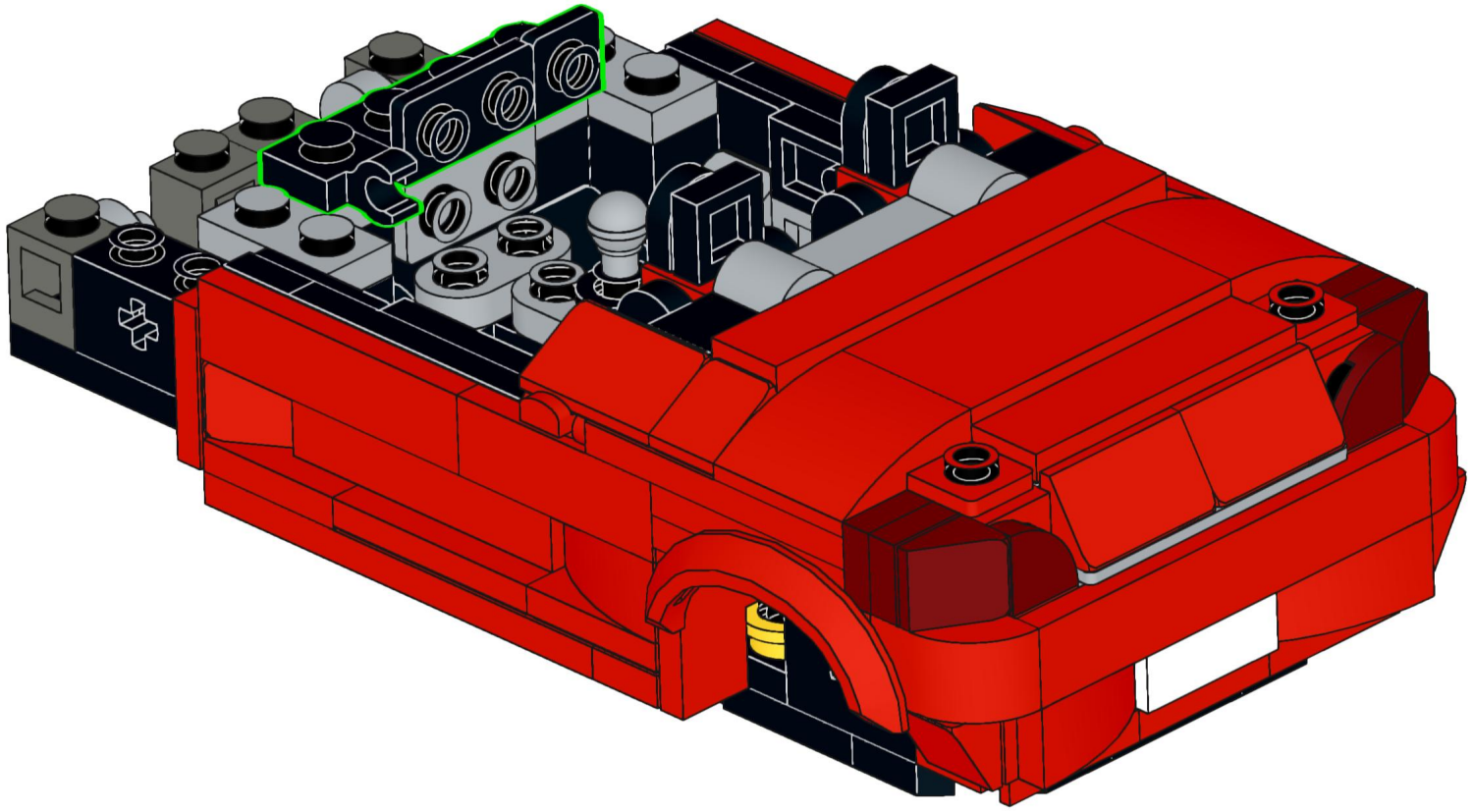

61

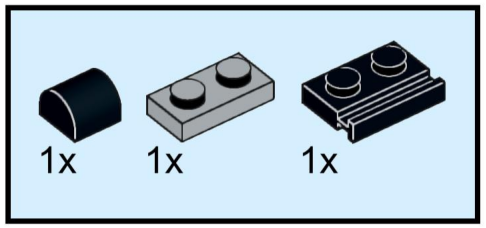

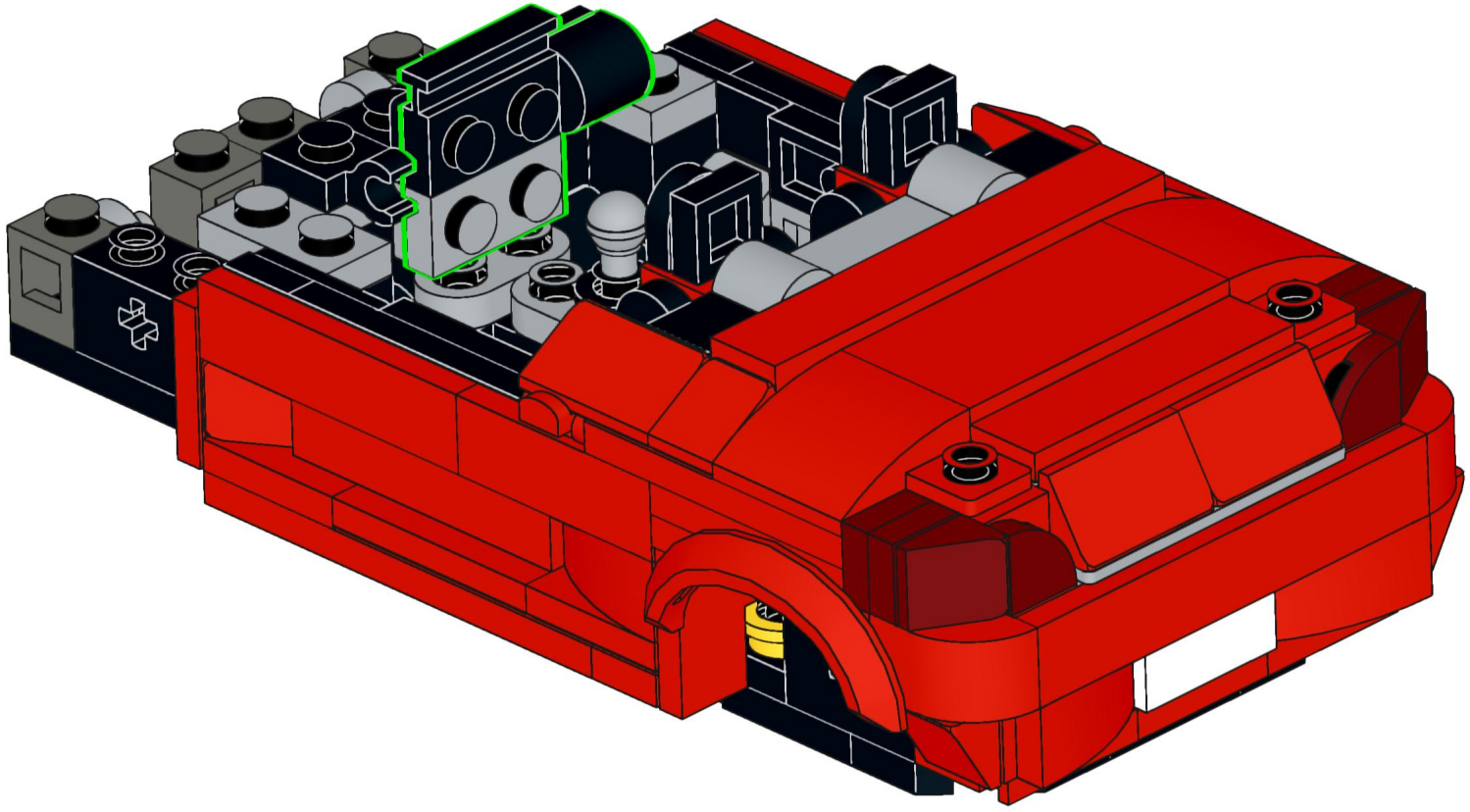

62

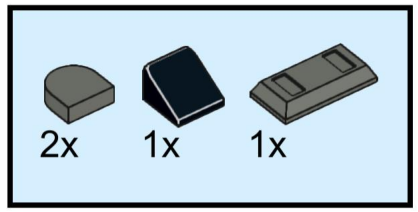

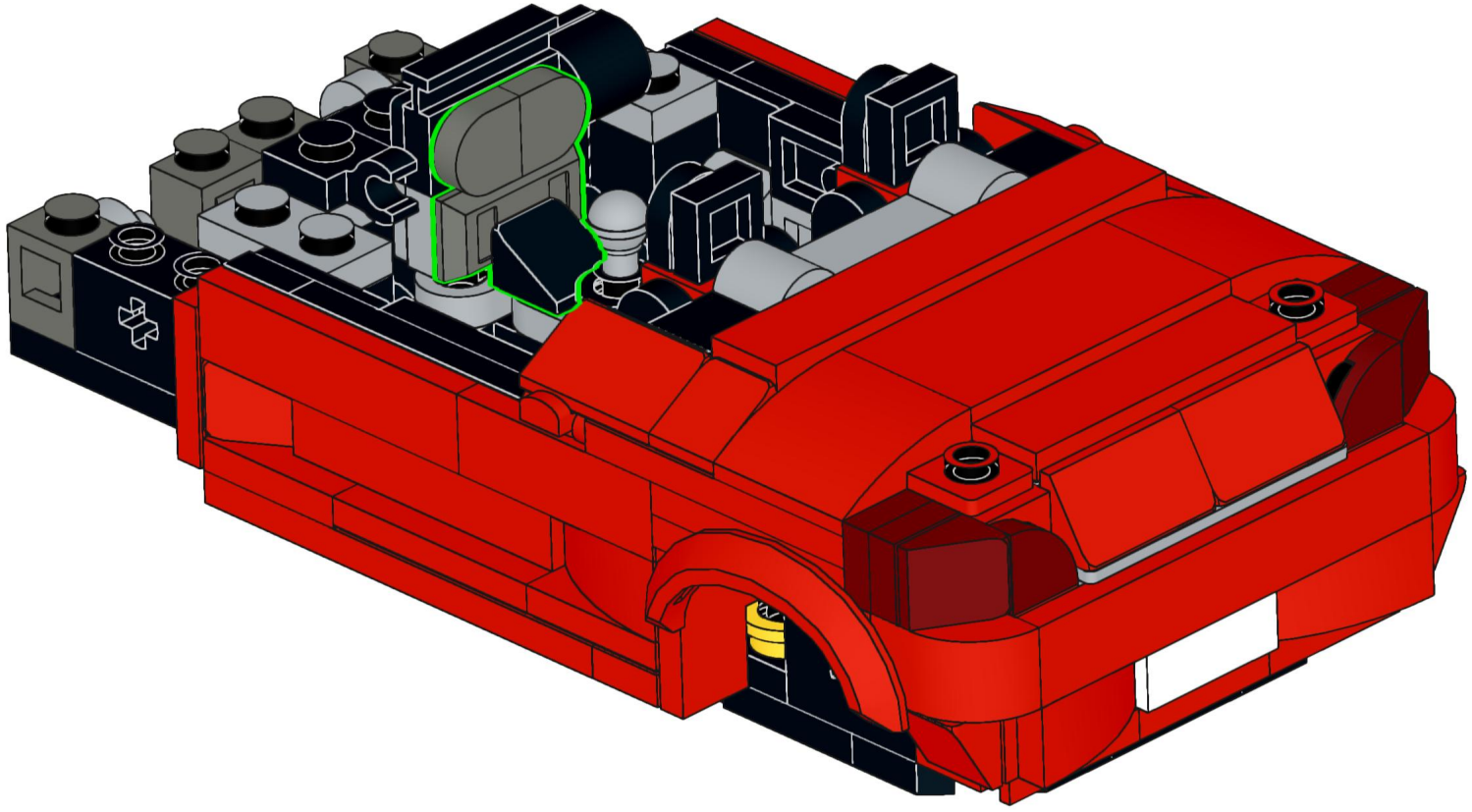

63

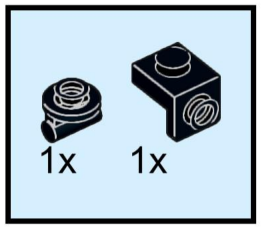

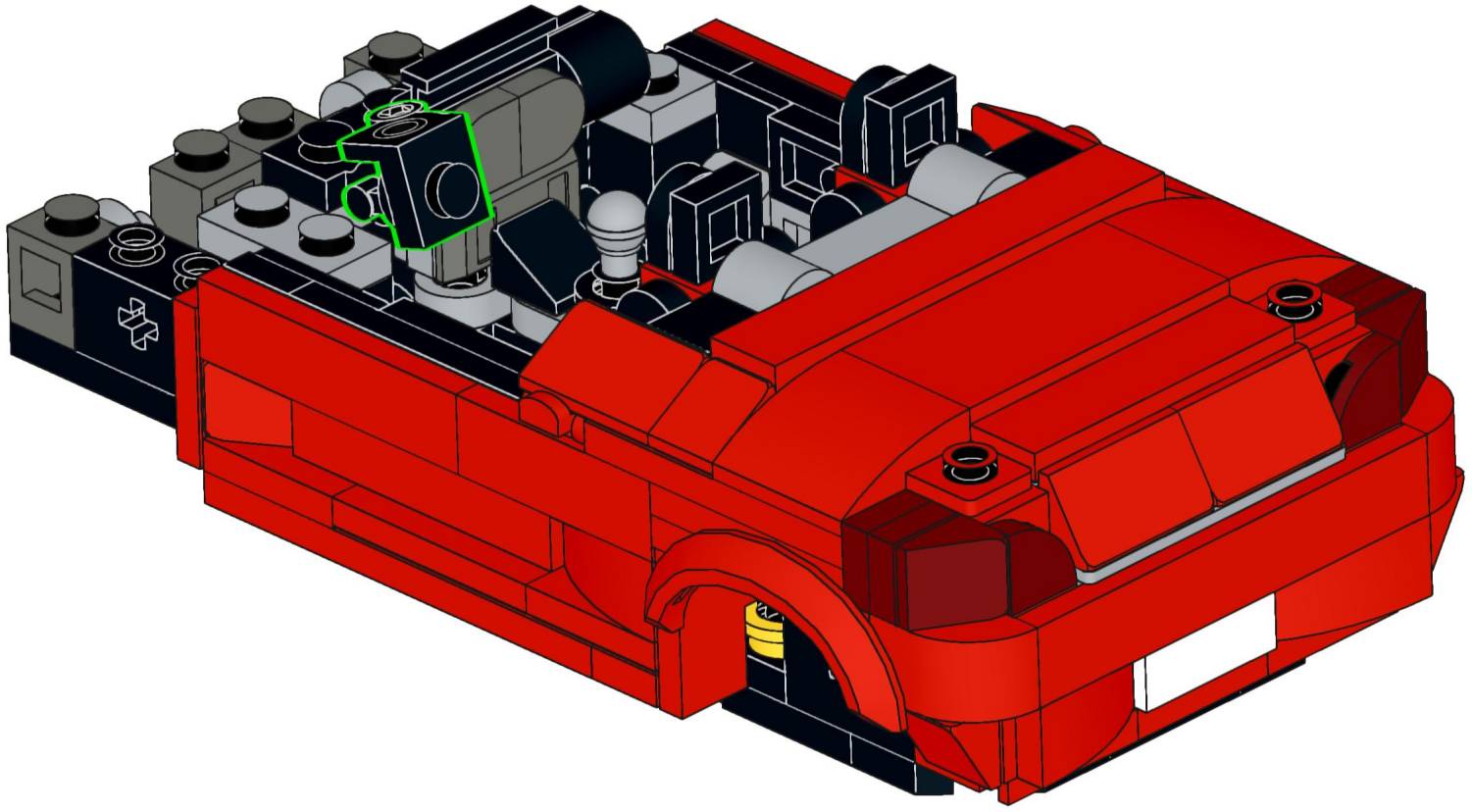

64

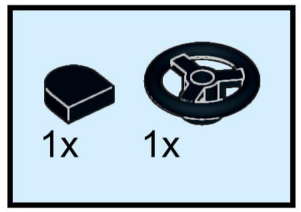

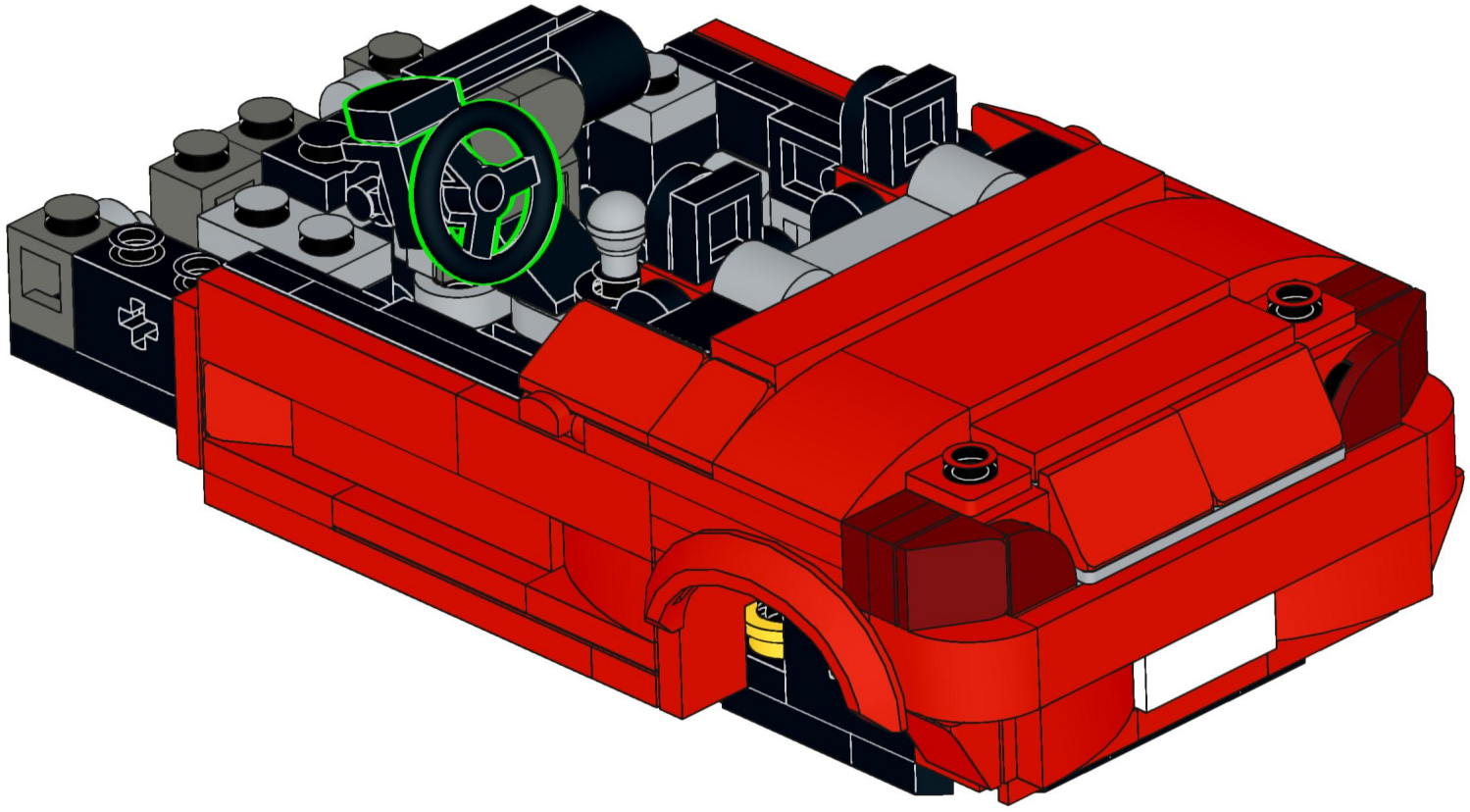

65

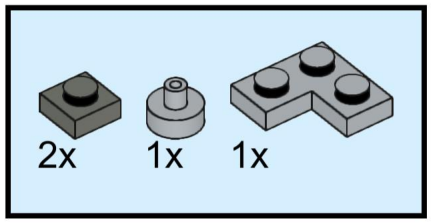

66

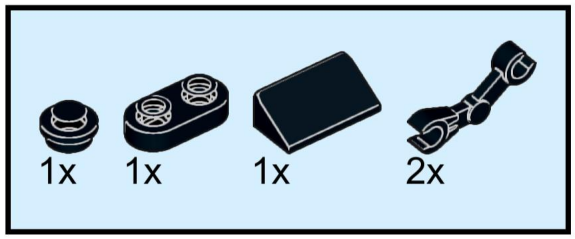

67

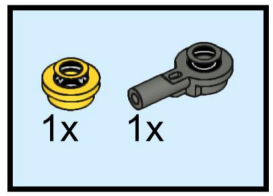

68

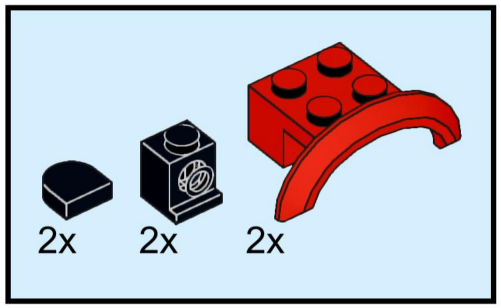

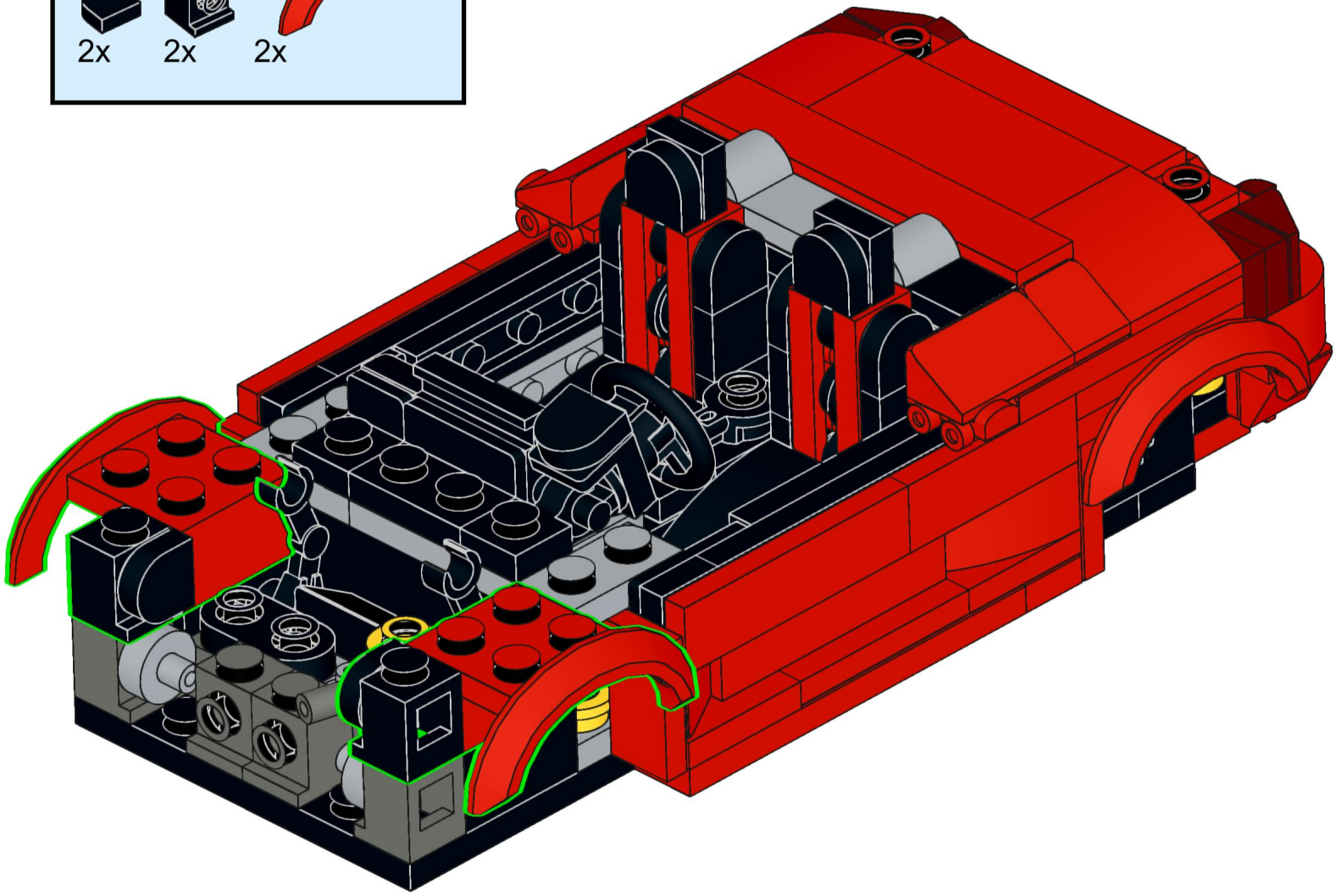

69

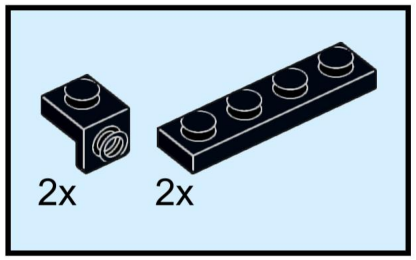

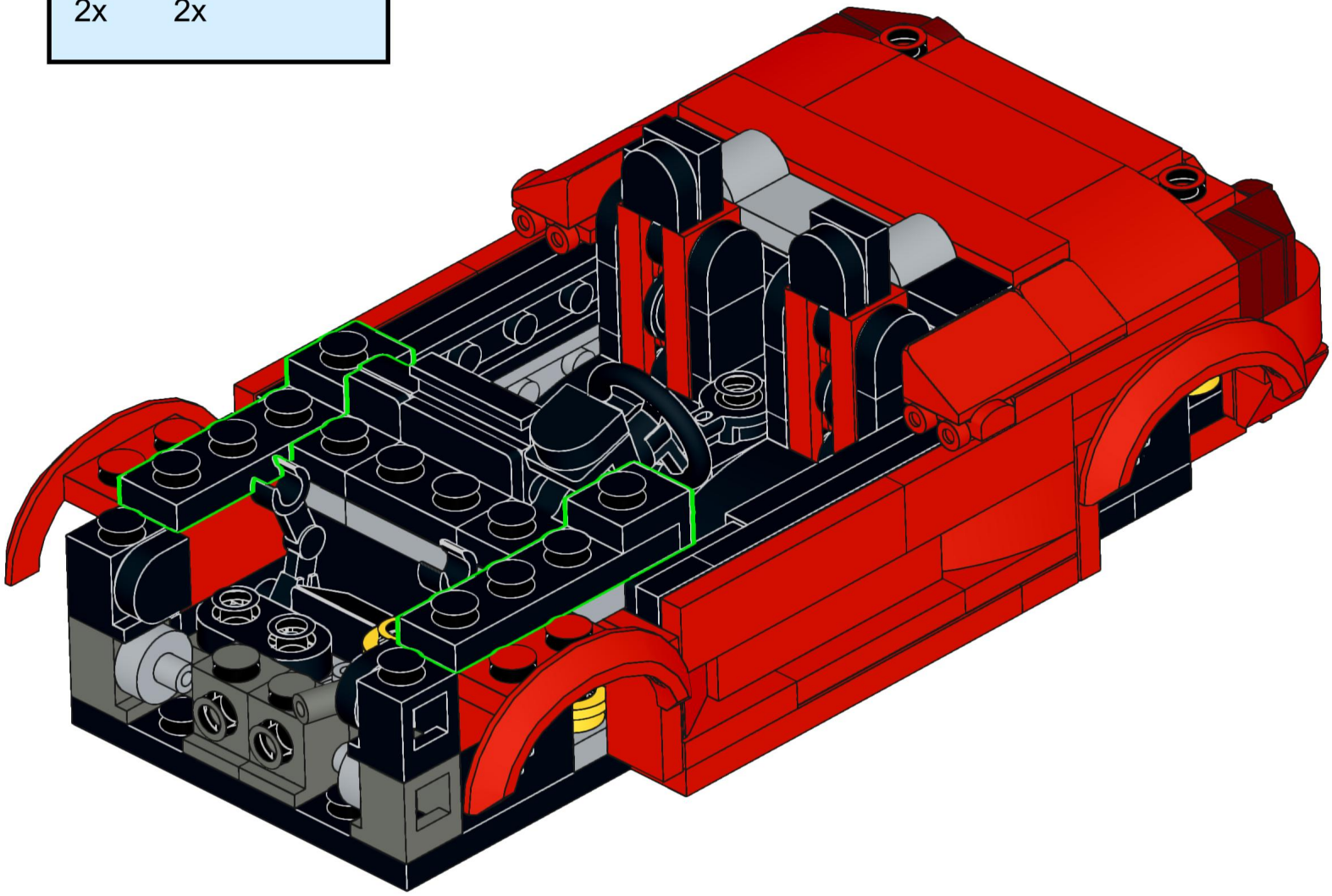

70

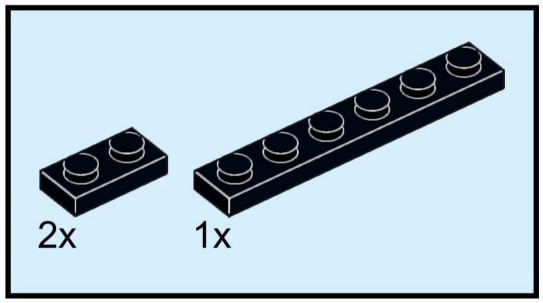

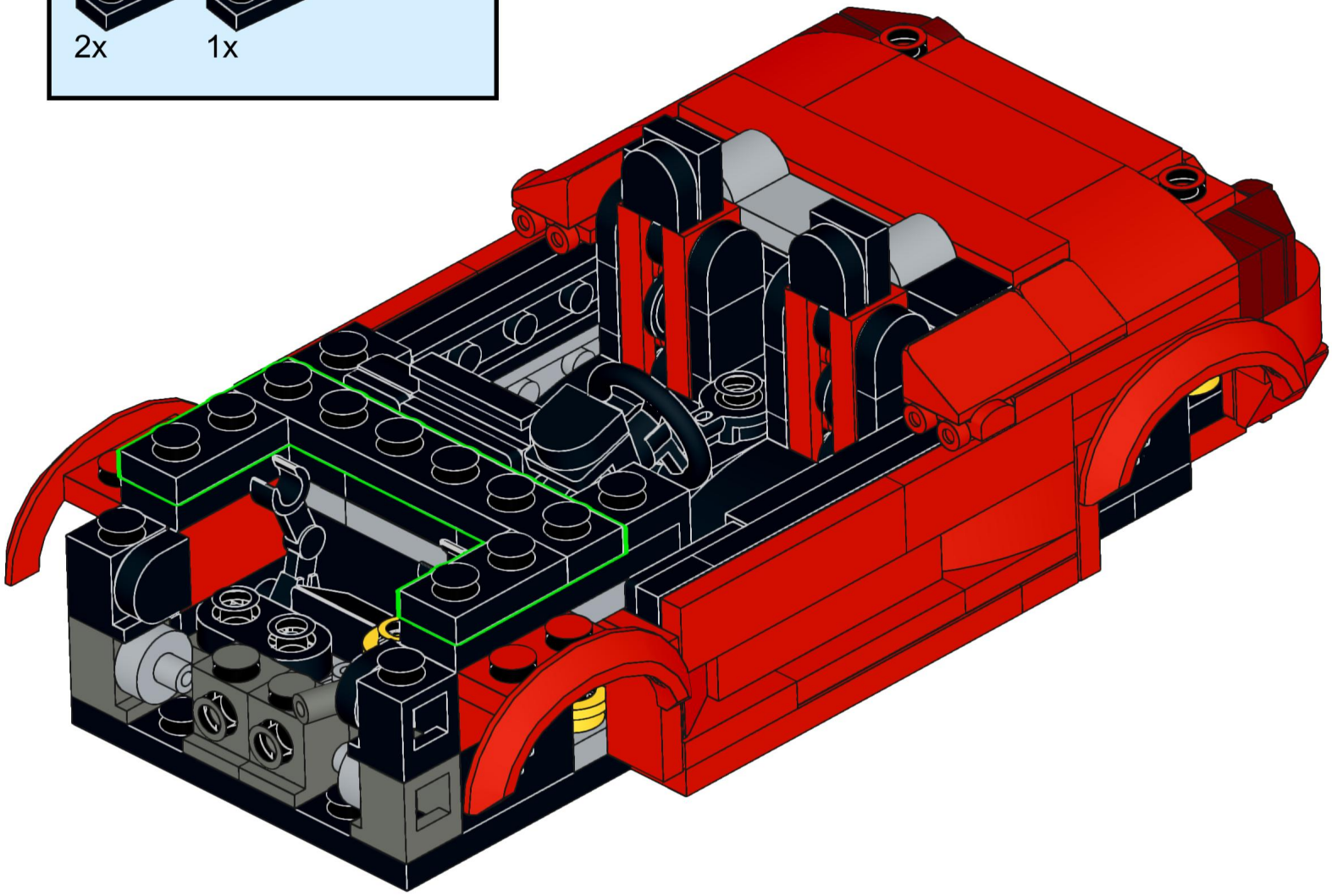

71

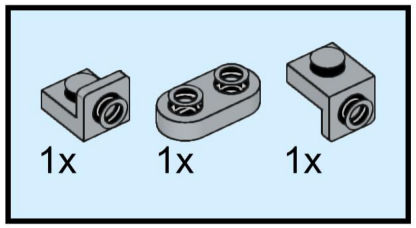

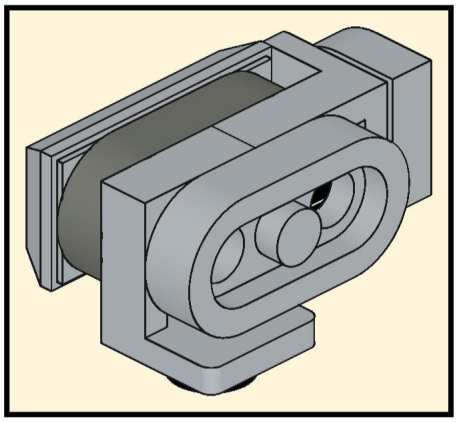

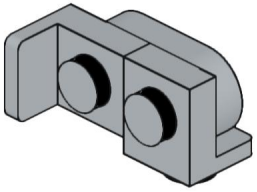

72

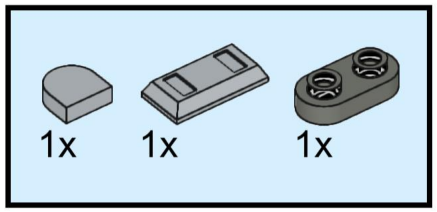

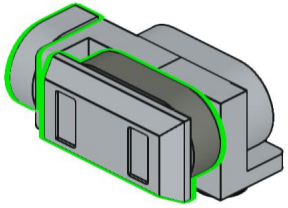

73

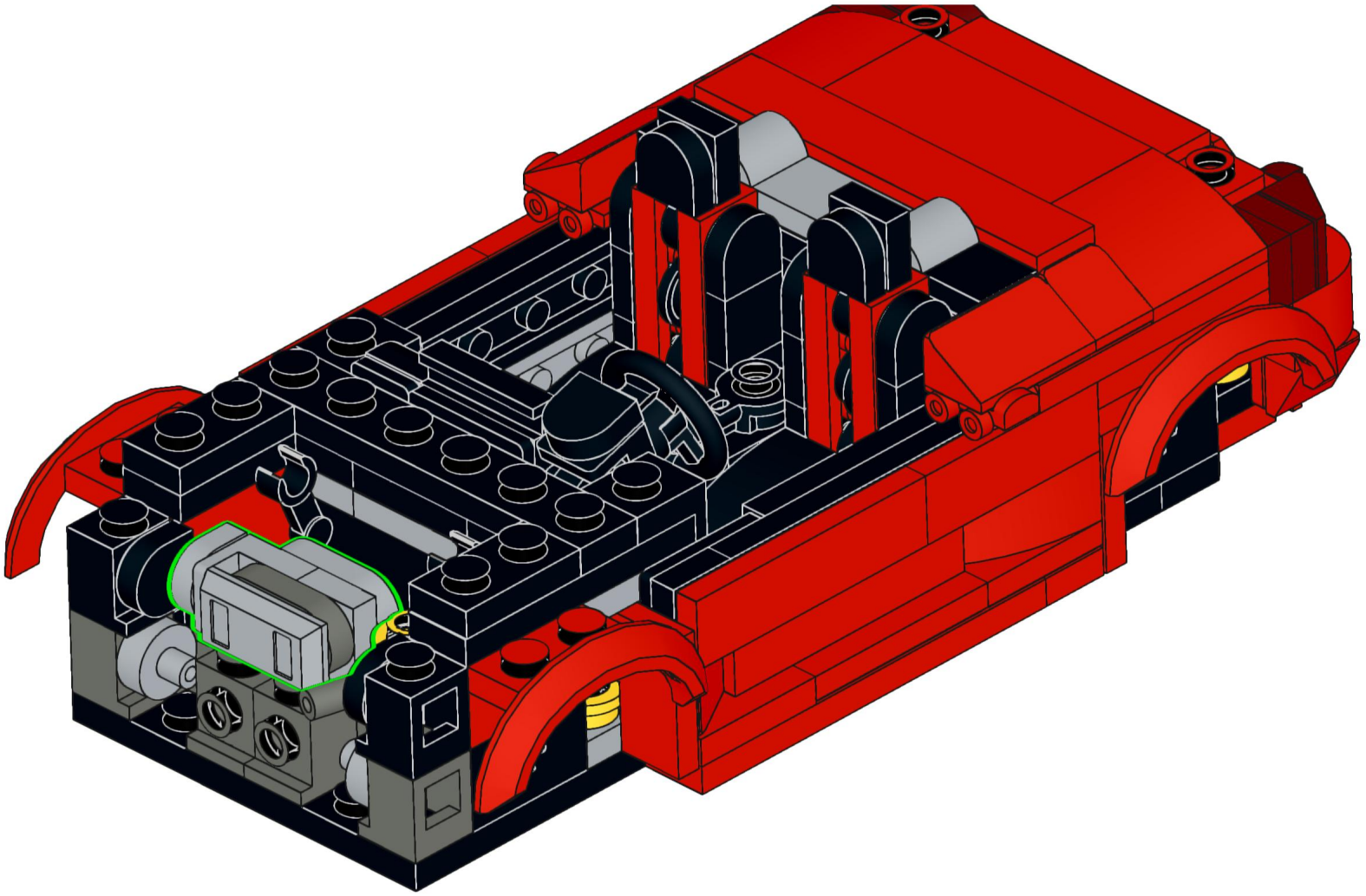

74

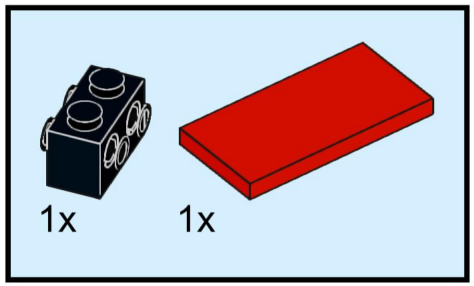

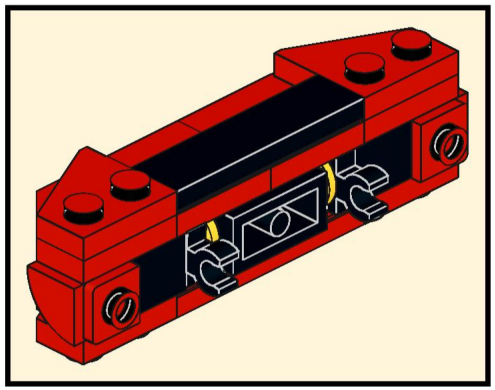

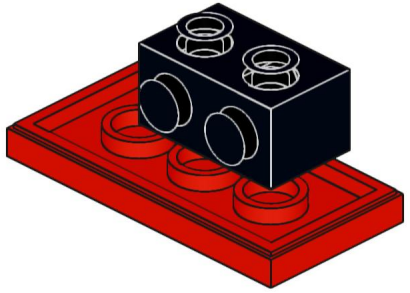

75

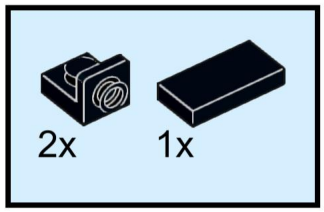

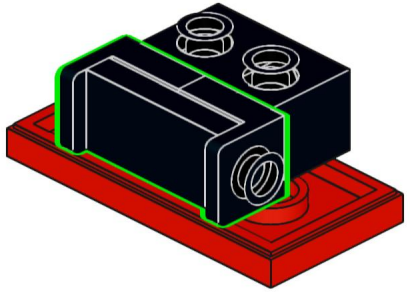

76

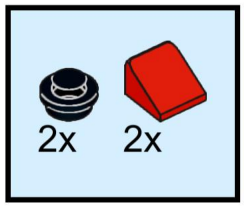

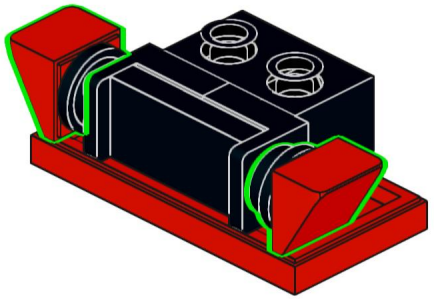

77

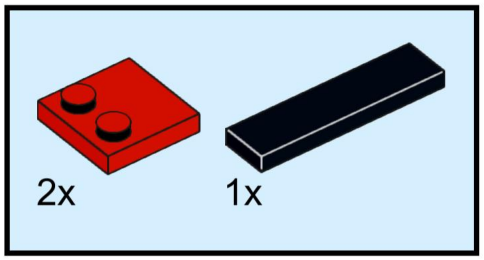

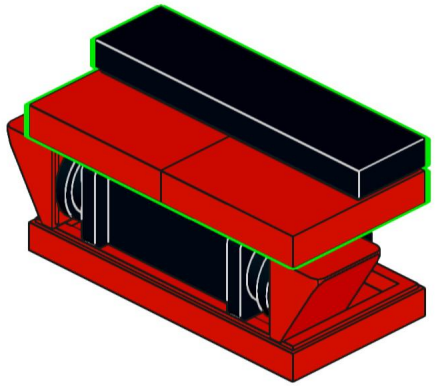

78

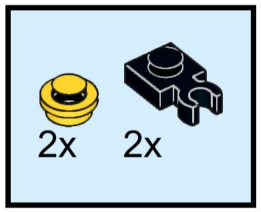

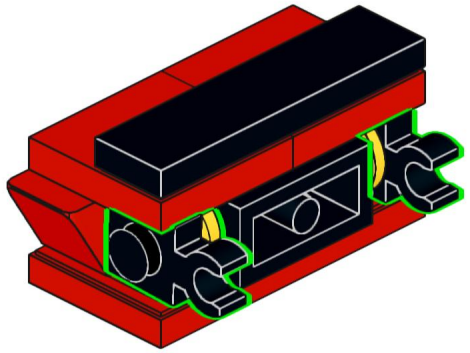

79

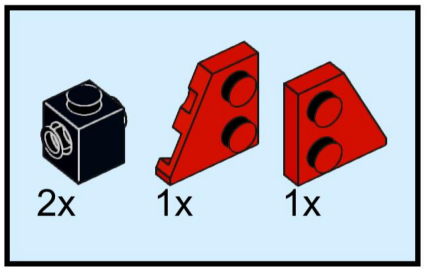

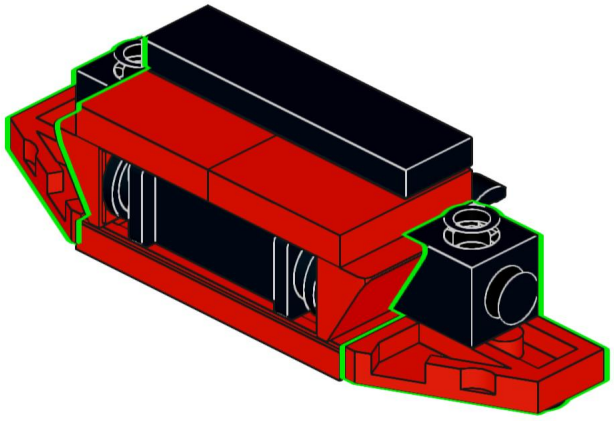

80

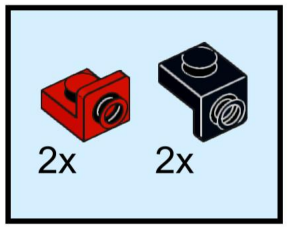

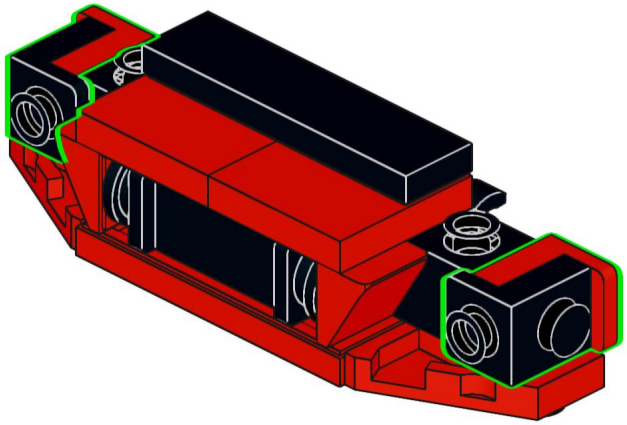

81

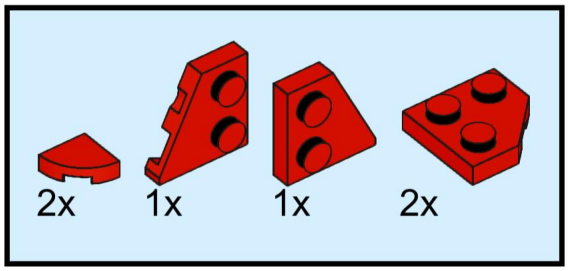

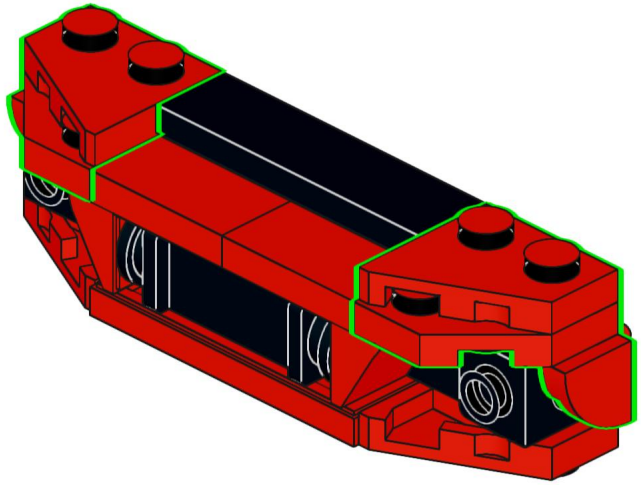

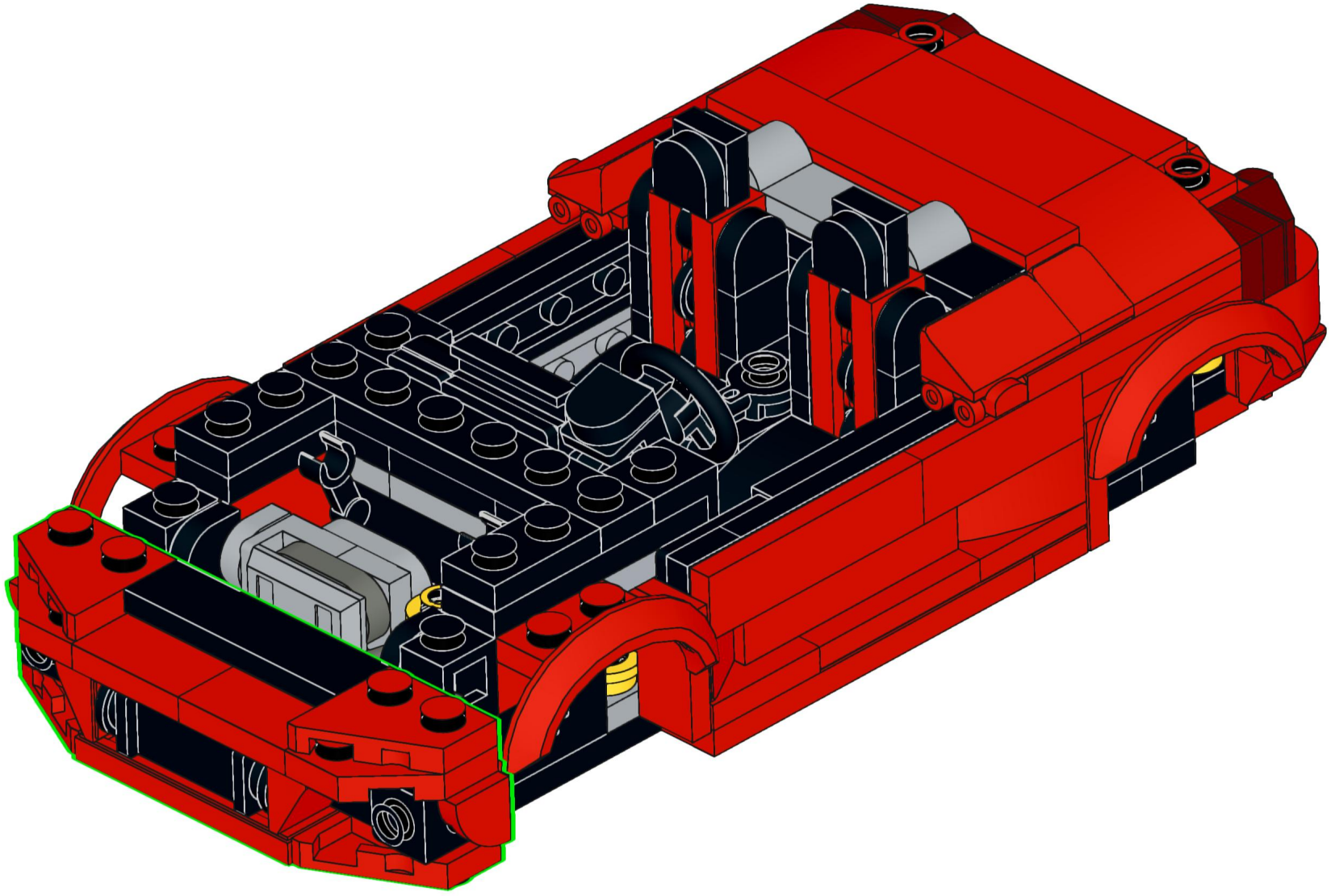

83

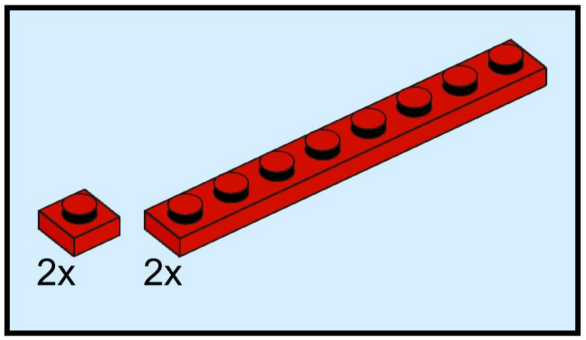

84

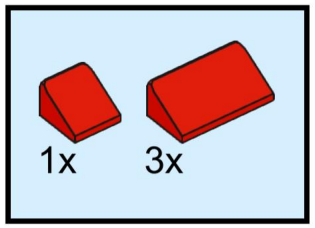

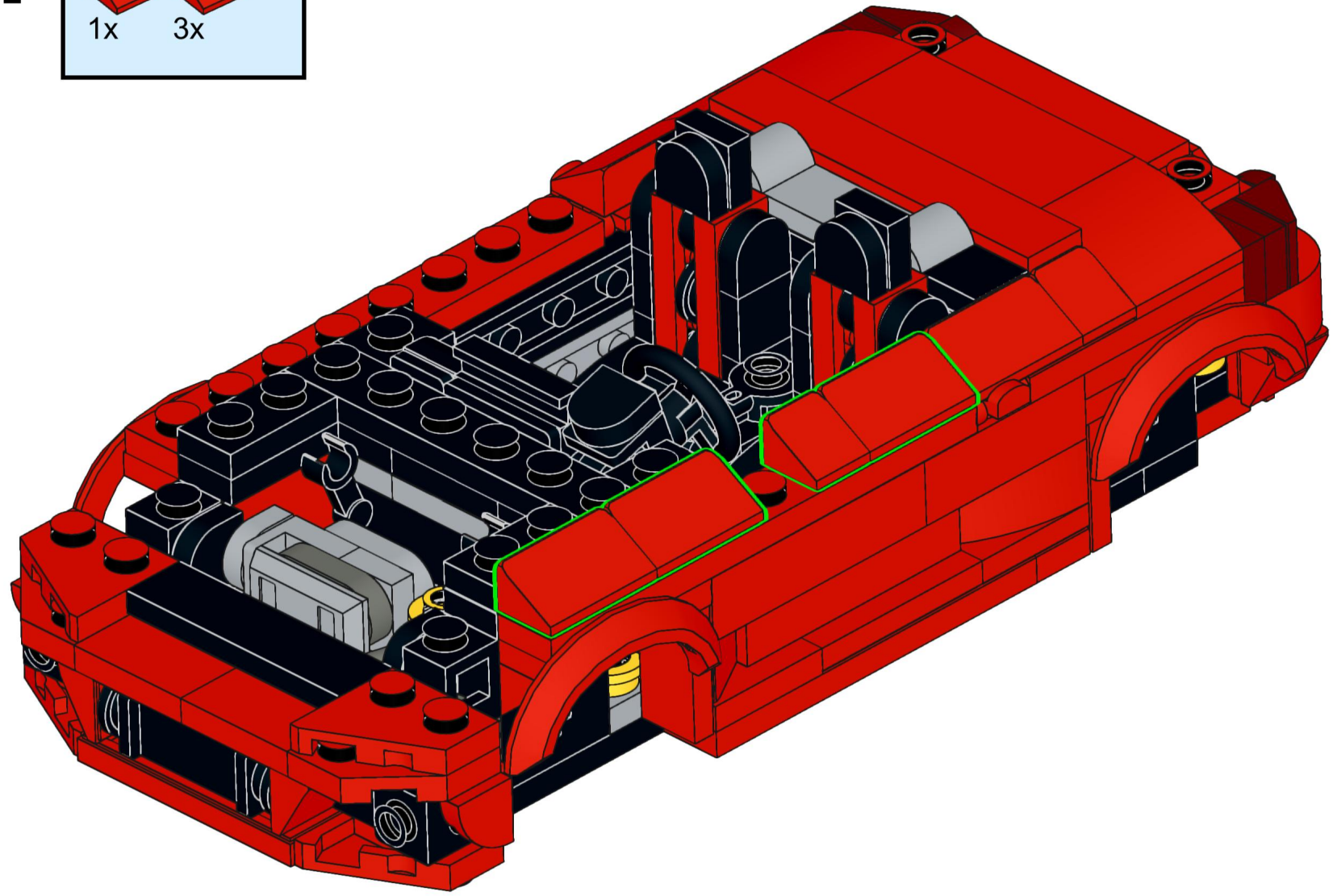

85

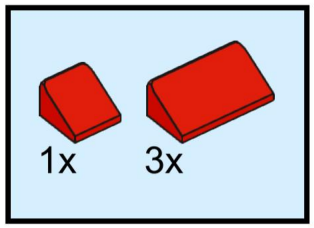

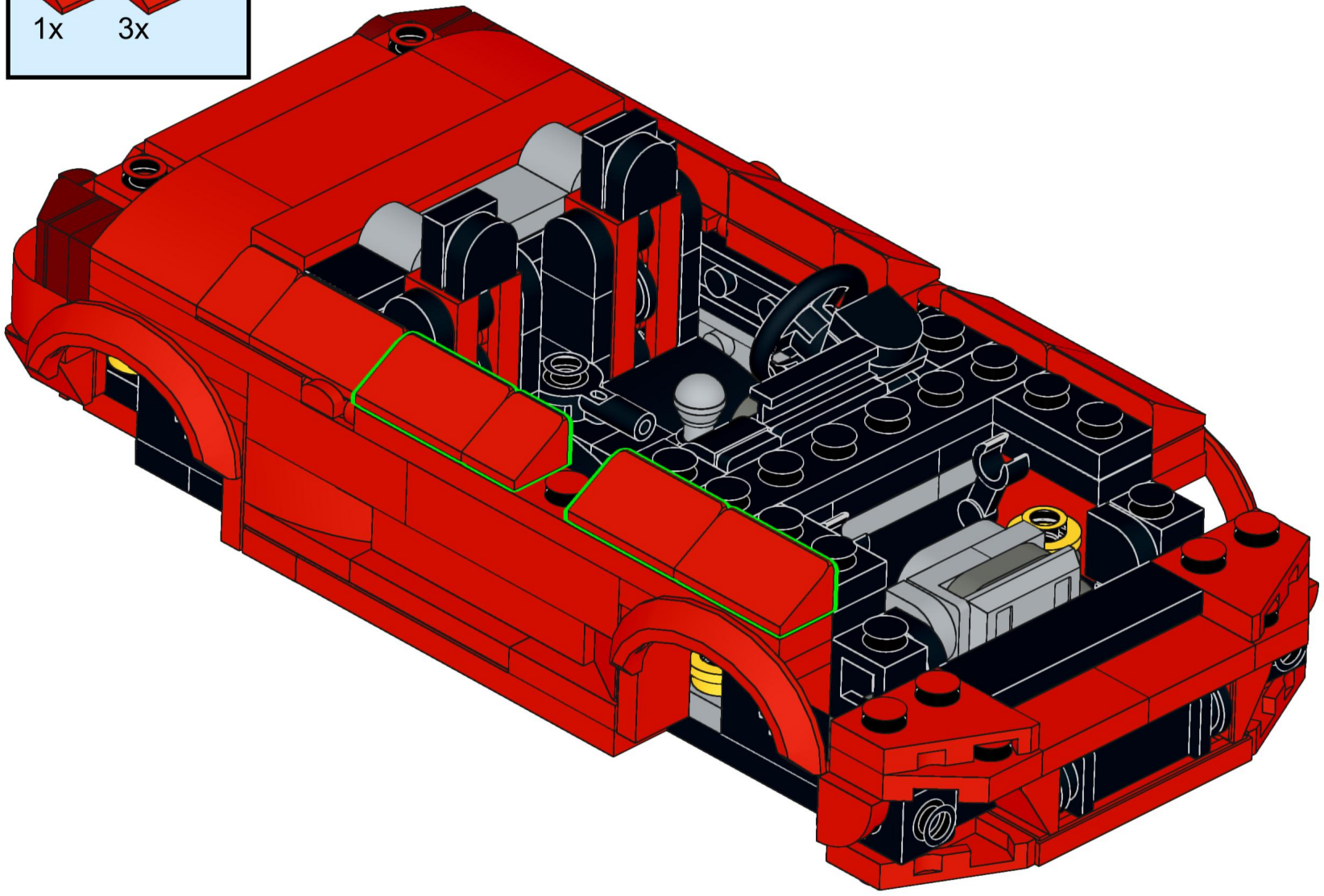

86

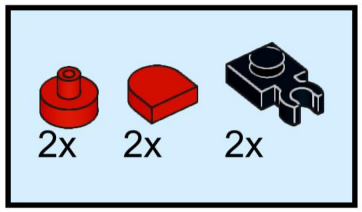

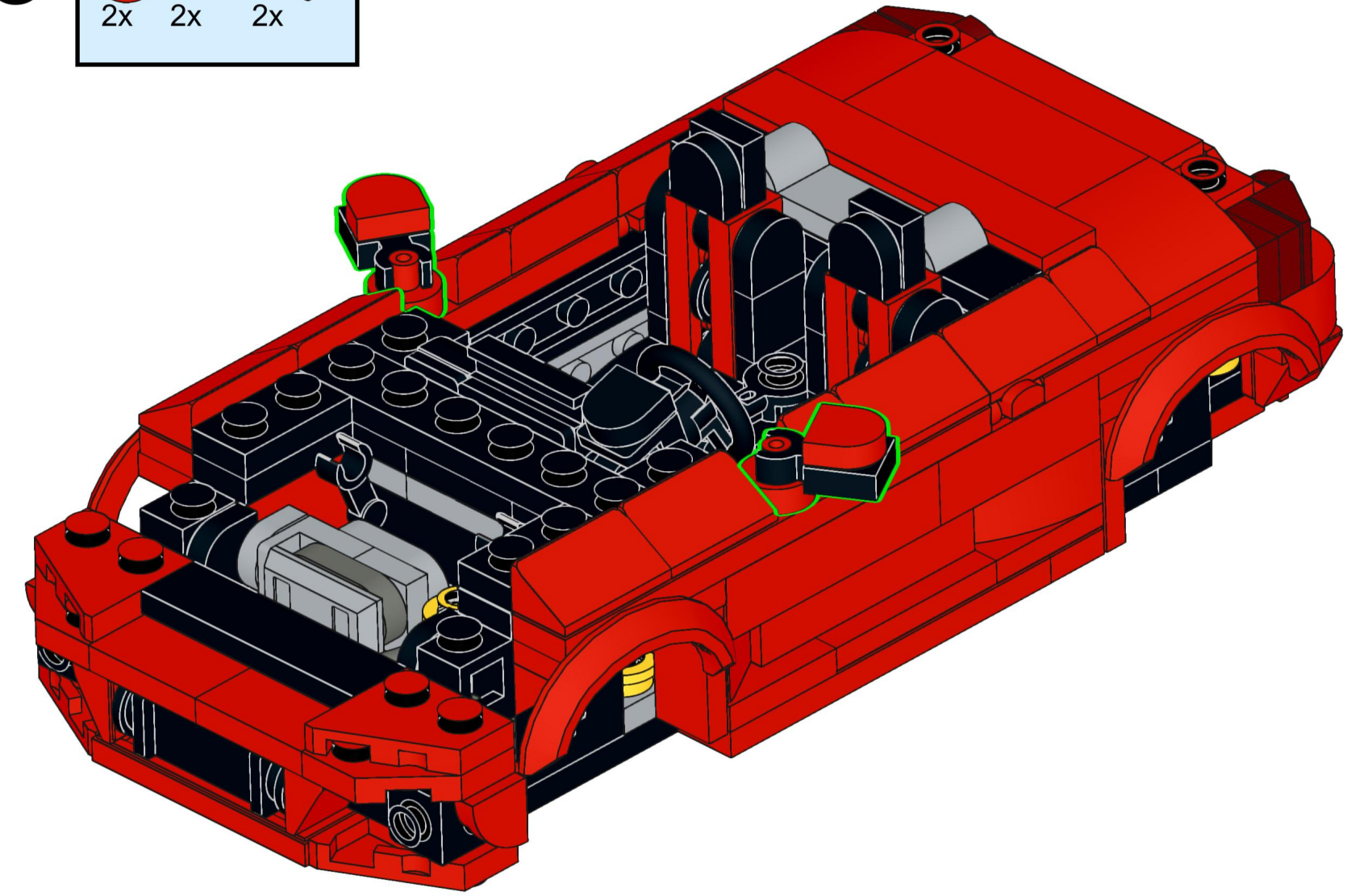

87

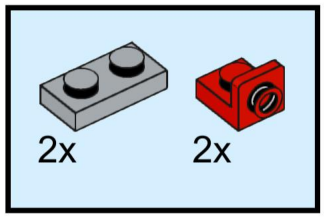

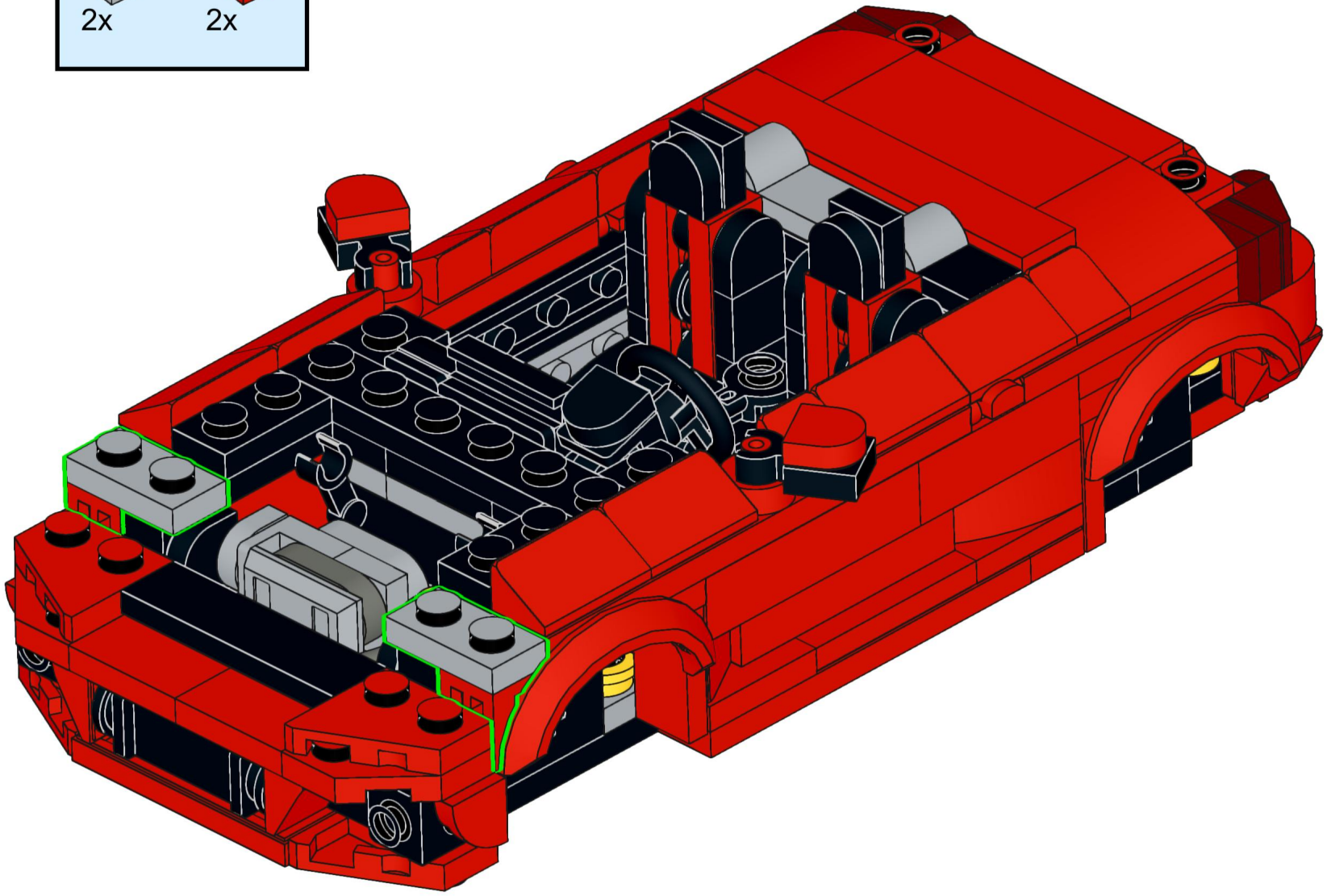

88

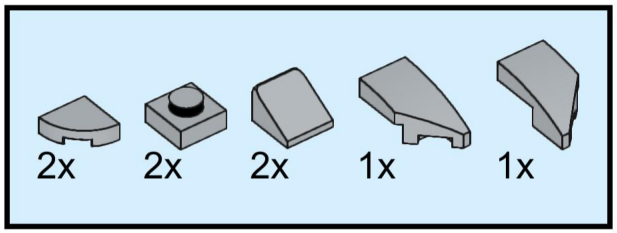

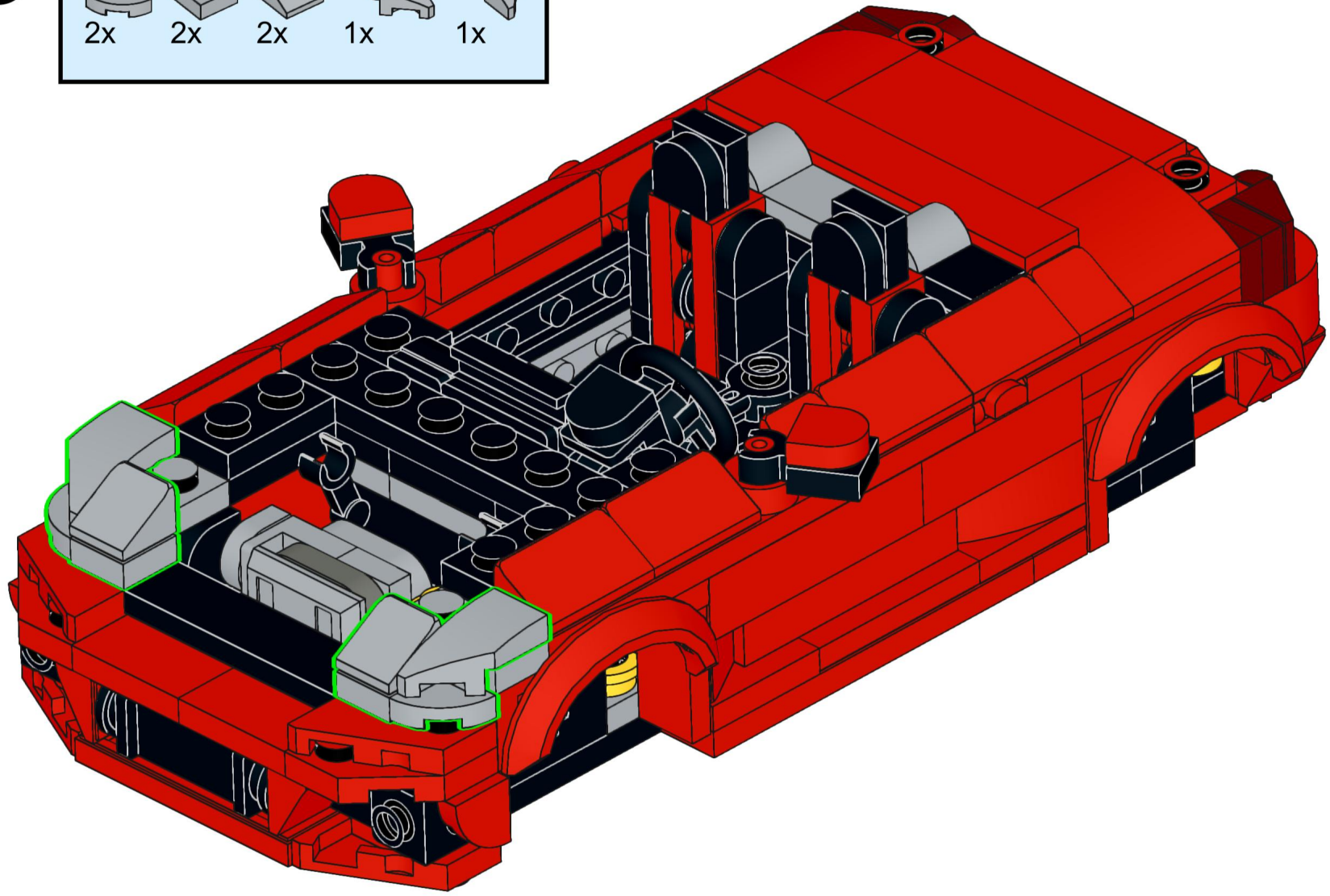

89

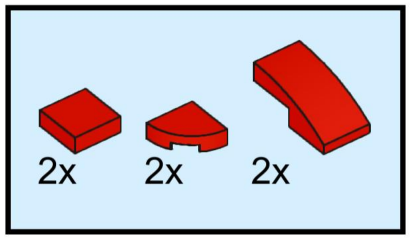

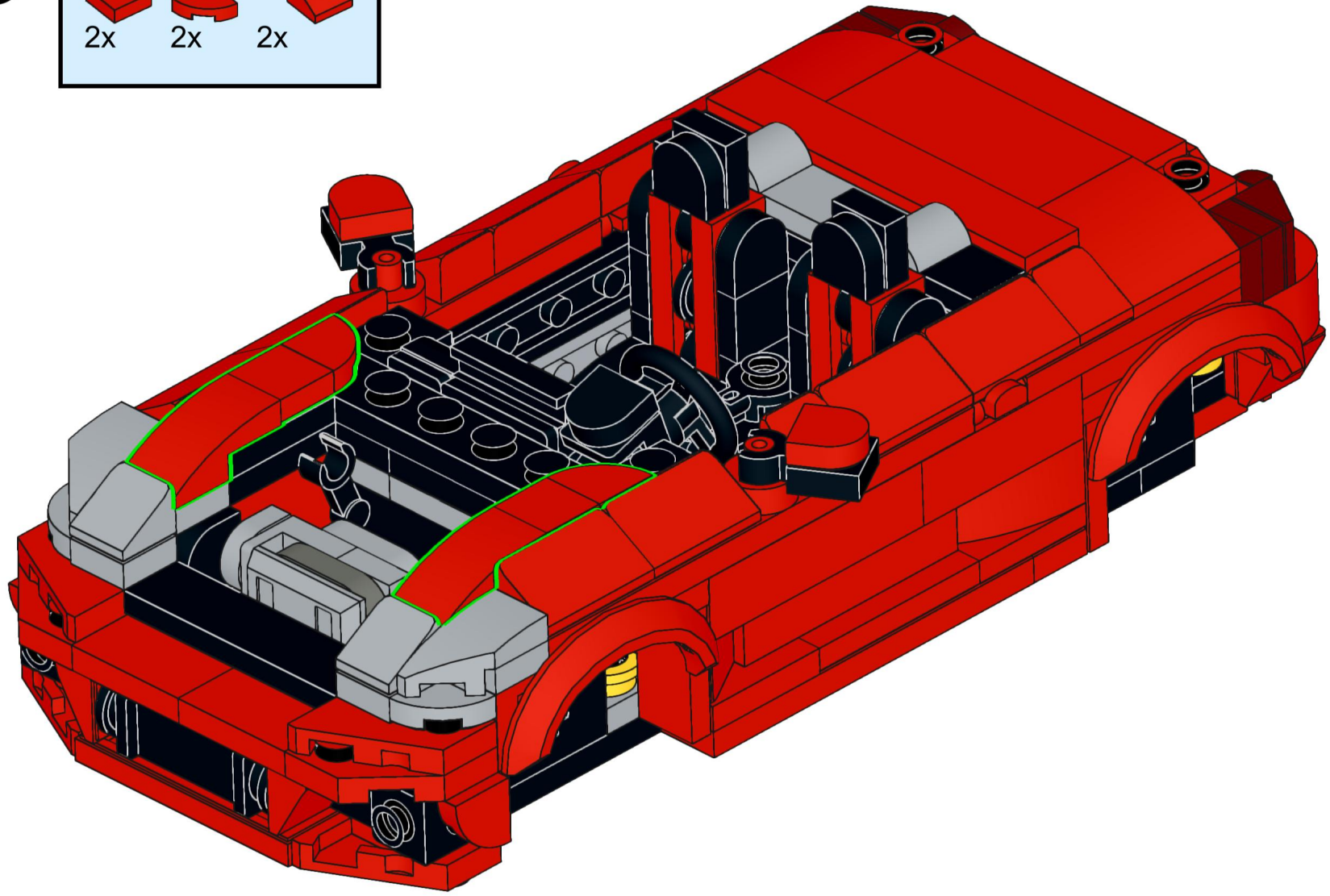

90

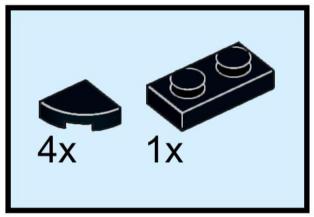

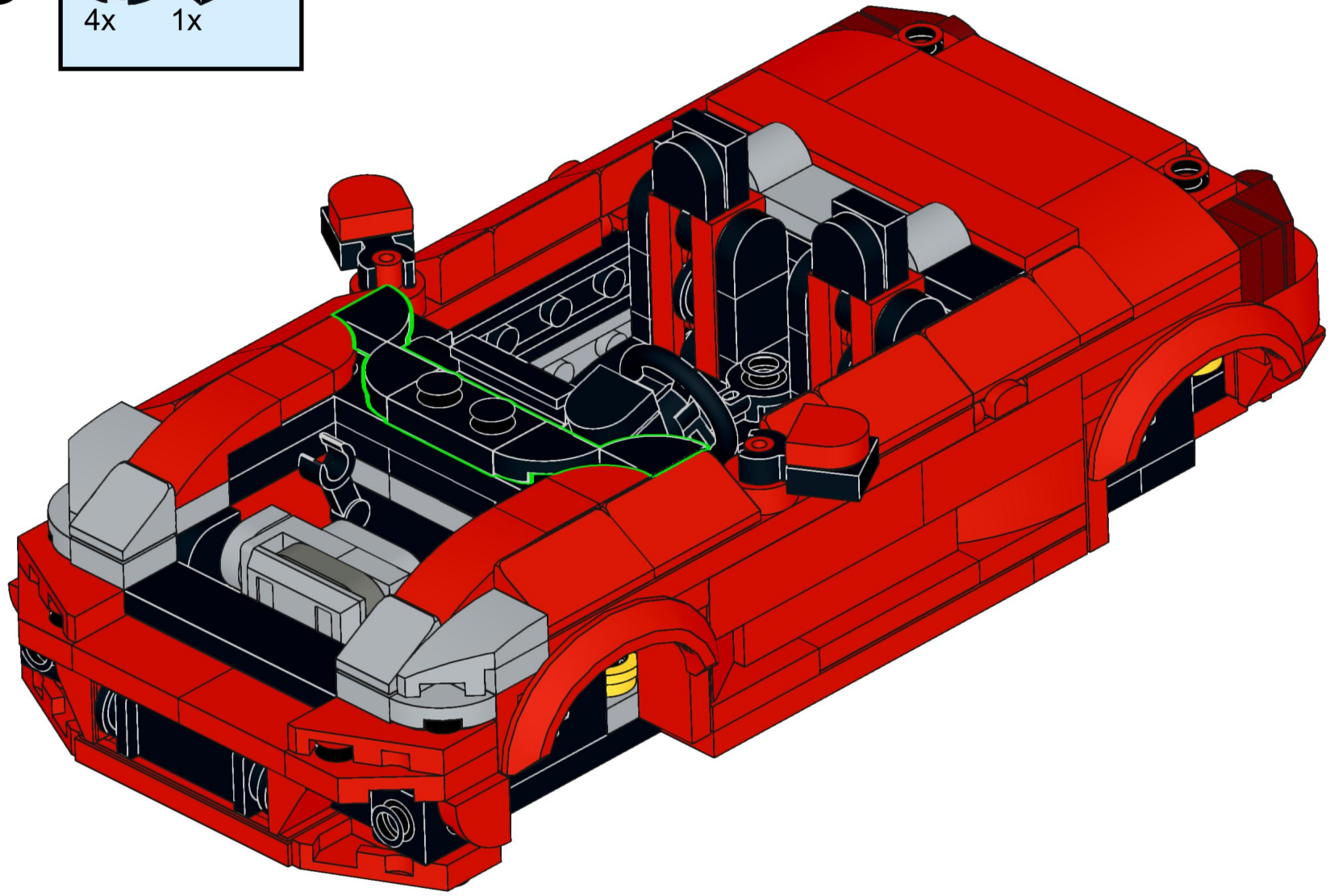

91

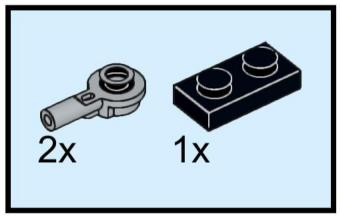

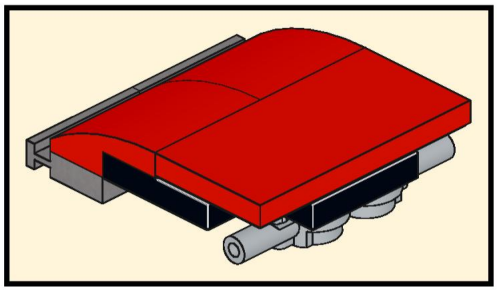

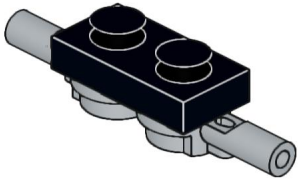

92

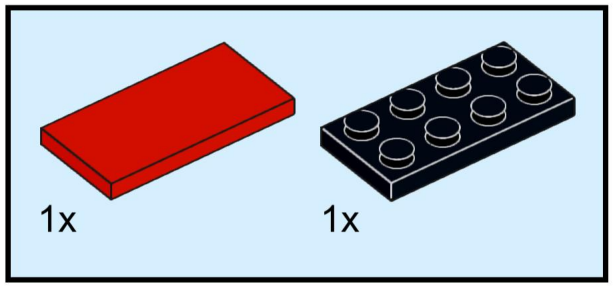

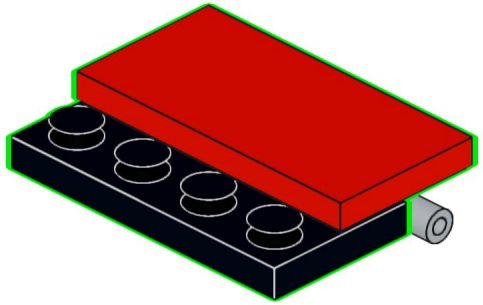

93

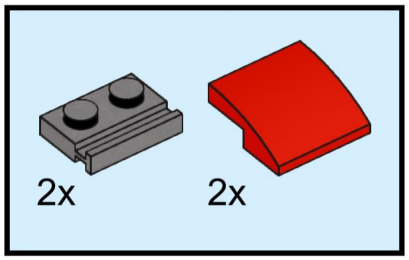

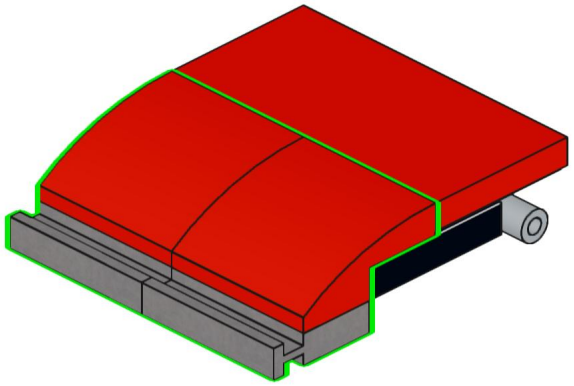

94

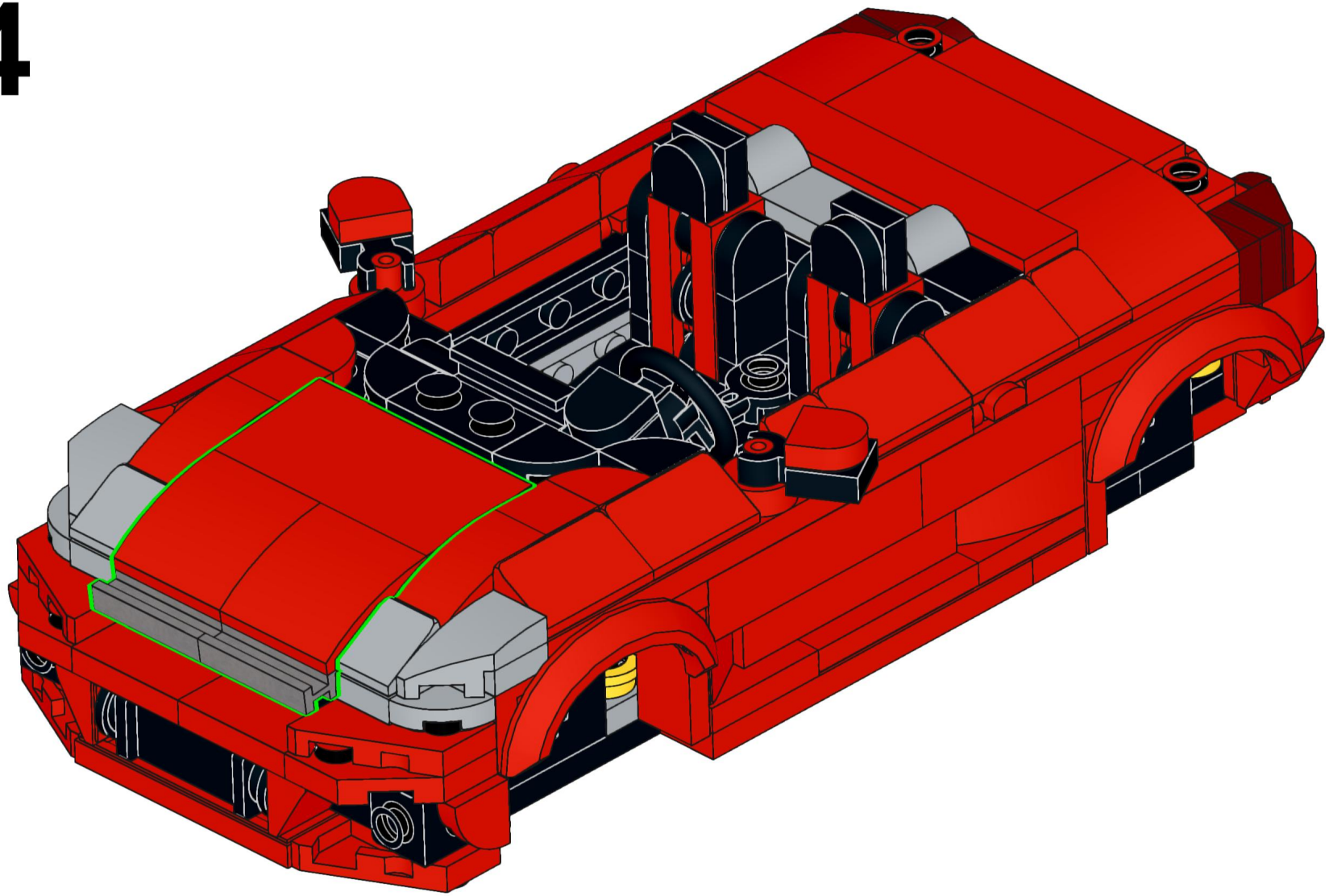

95

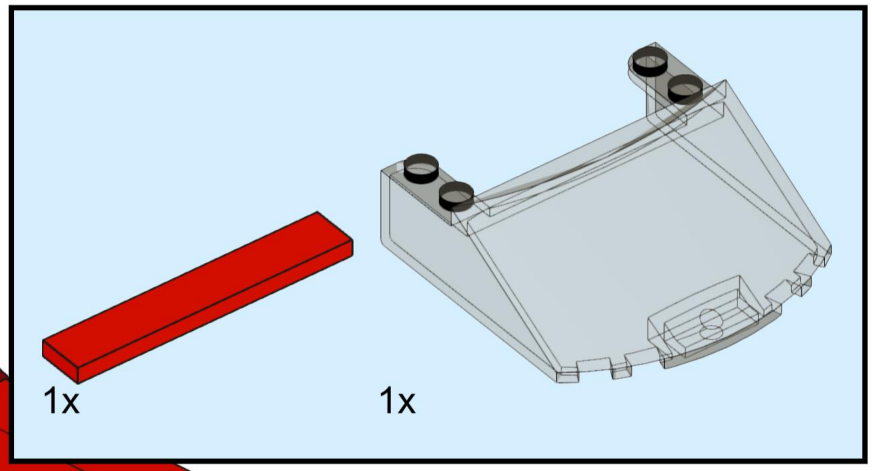

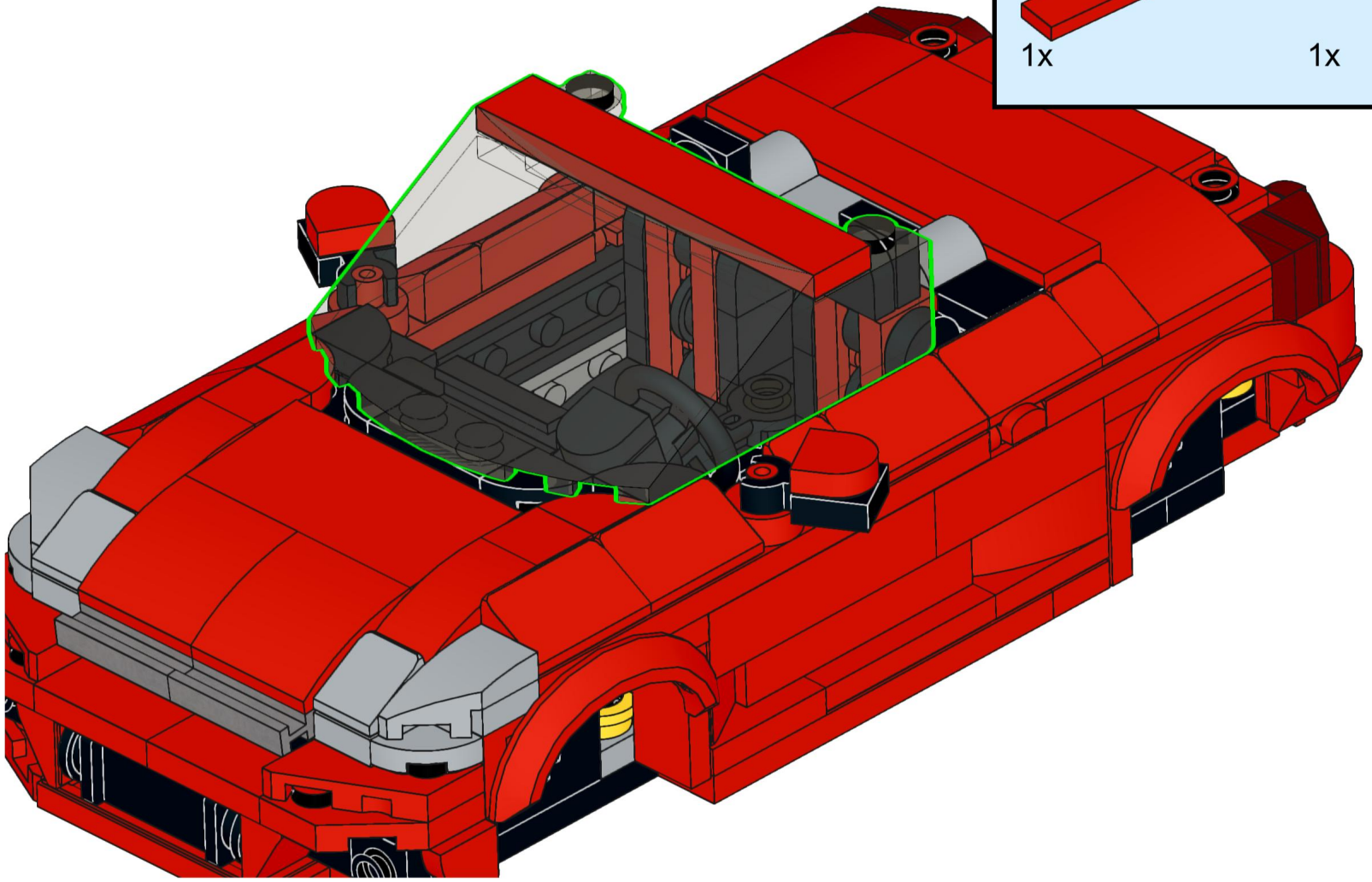

96

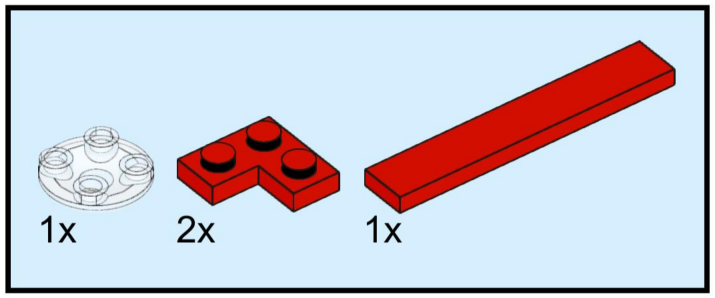

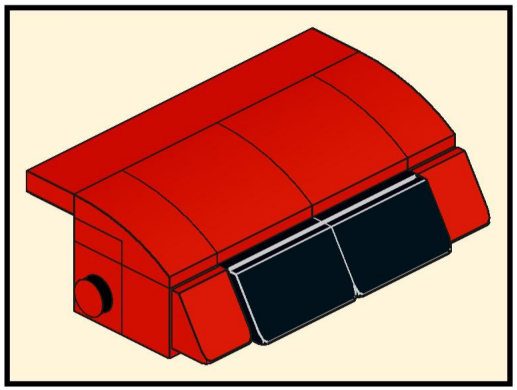

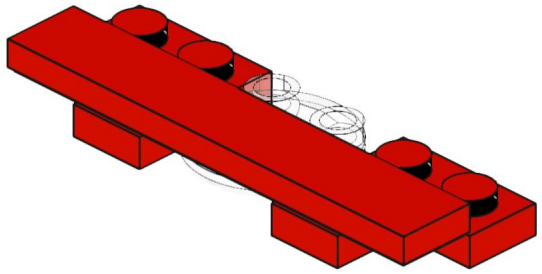

97

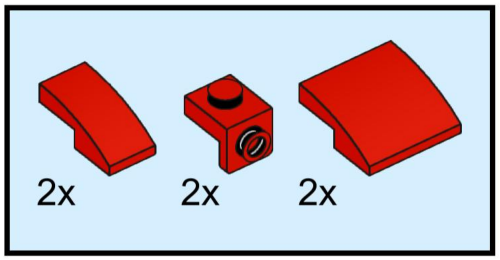

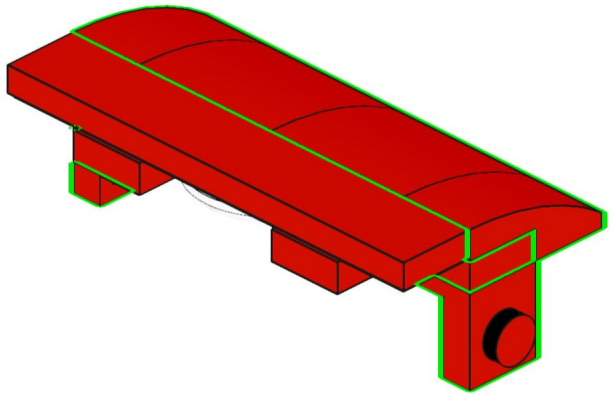

98

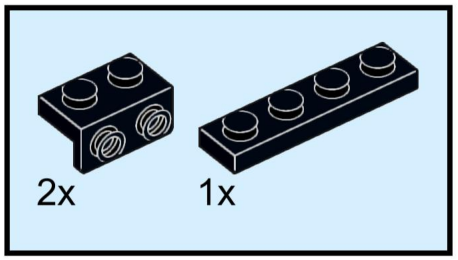

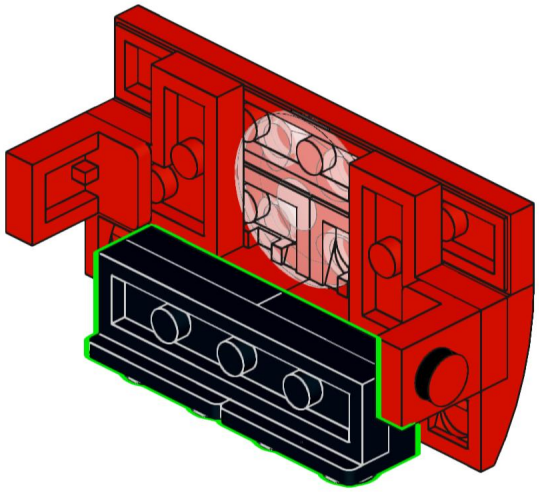

99

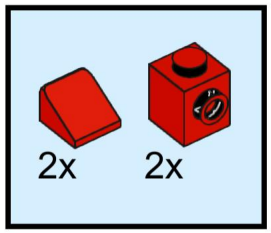

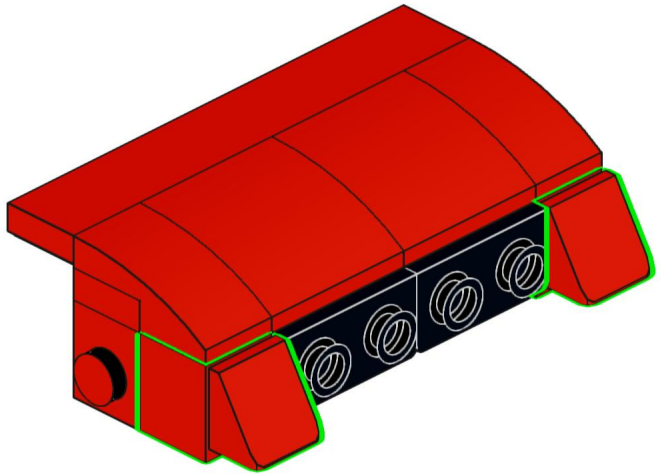

100

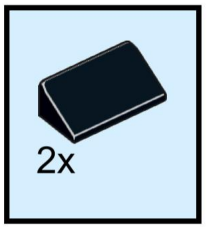

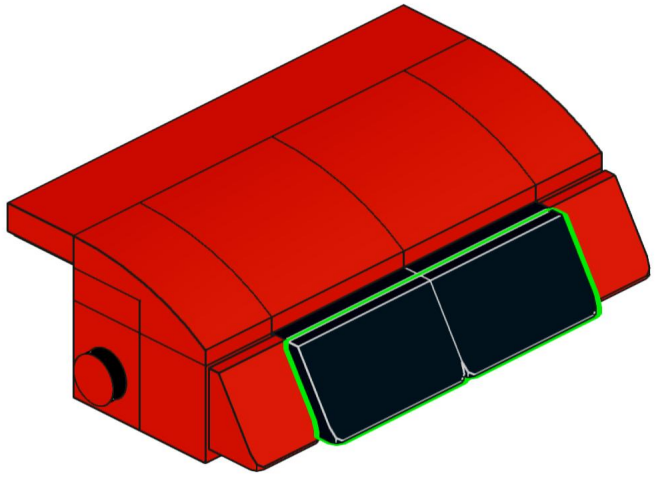

101

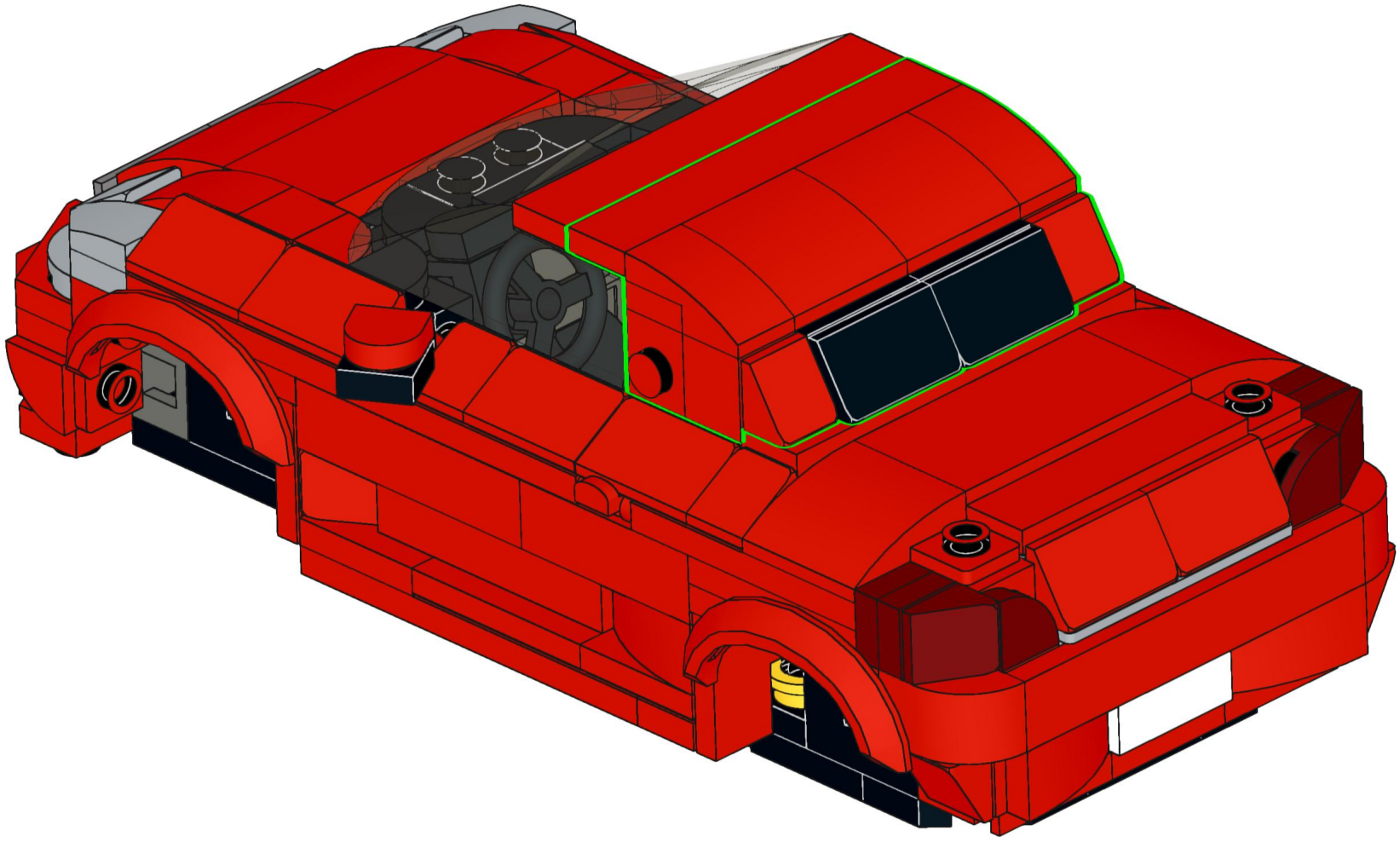

102

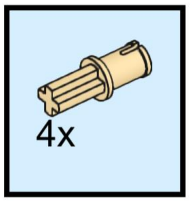

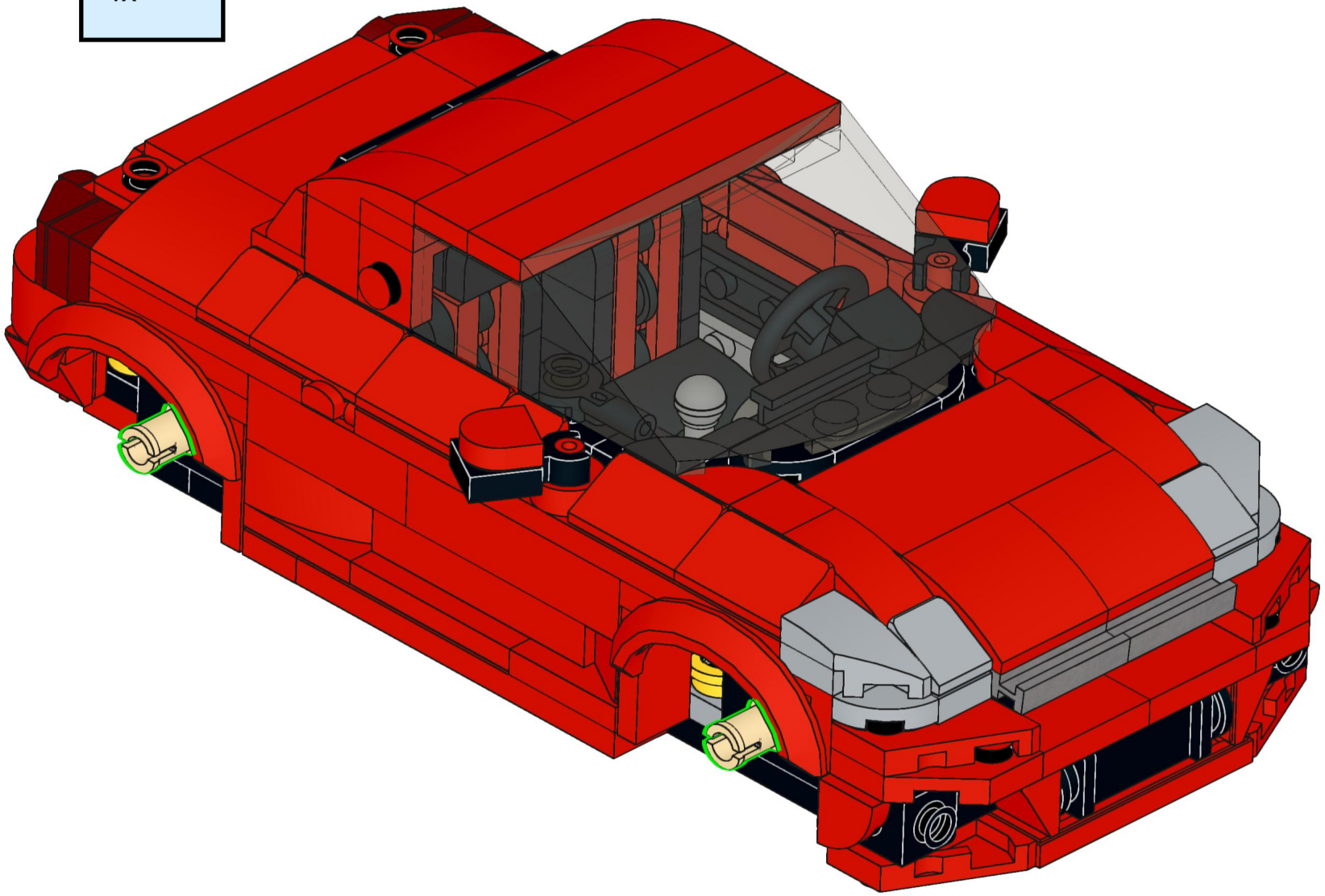

103

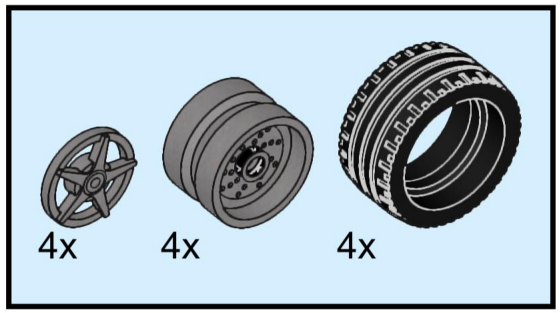

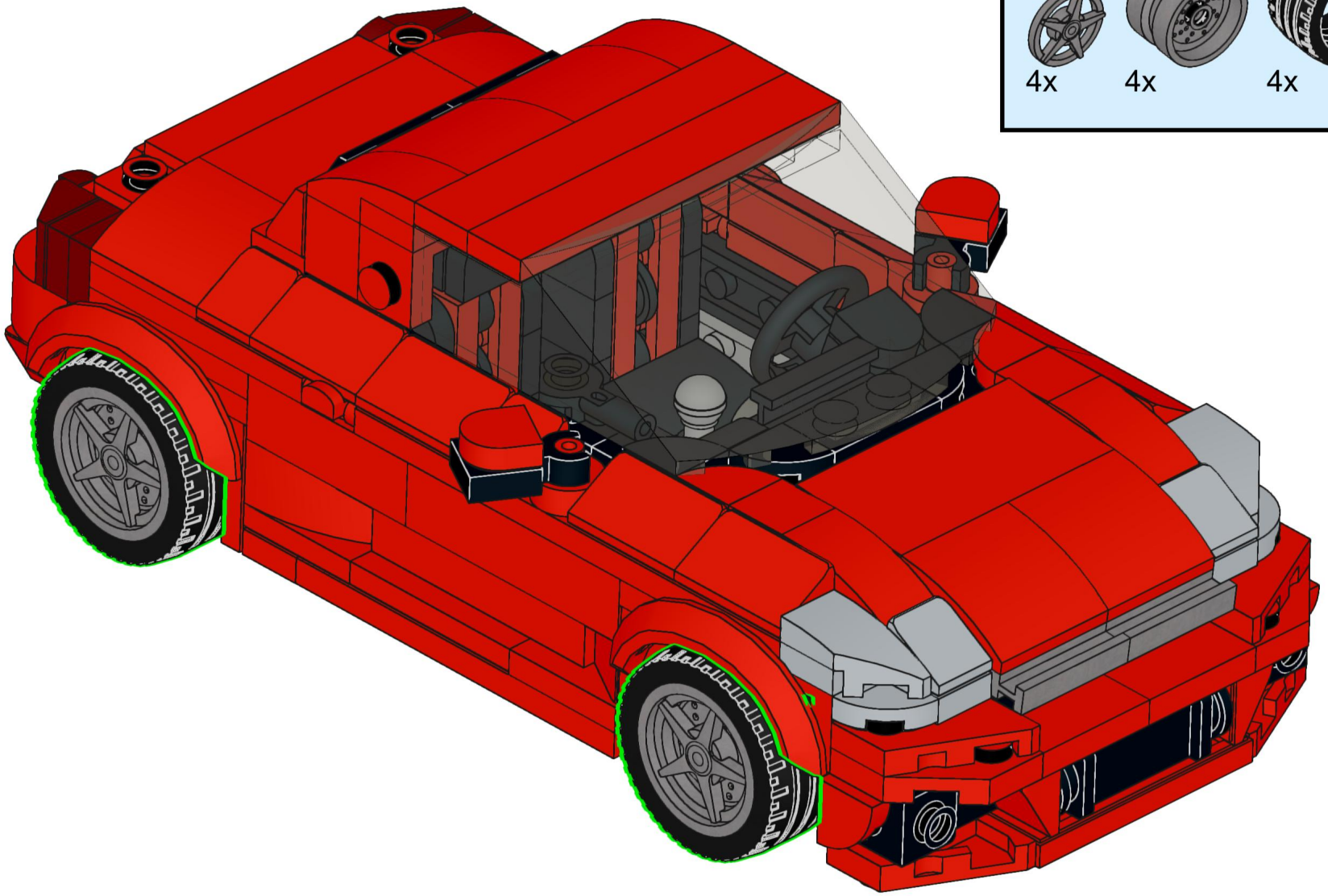

104

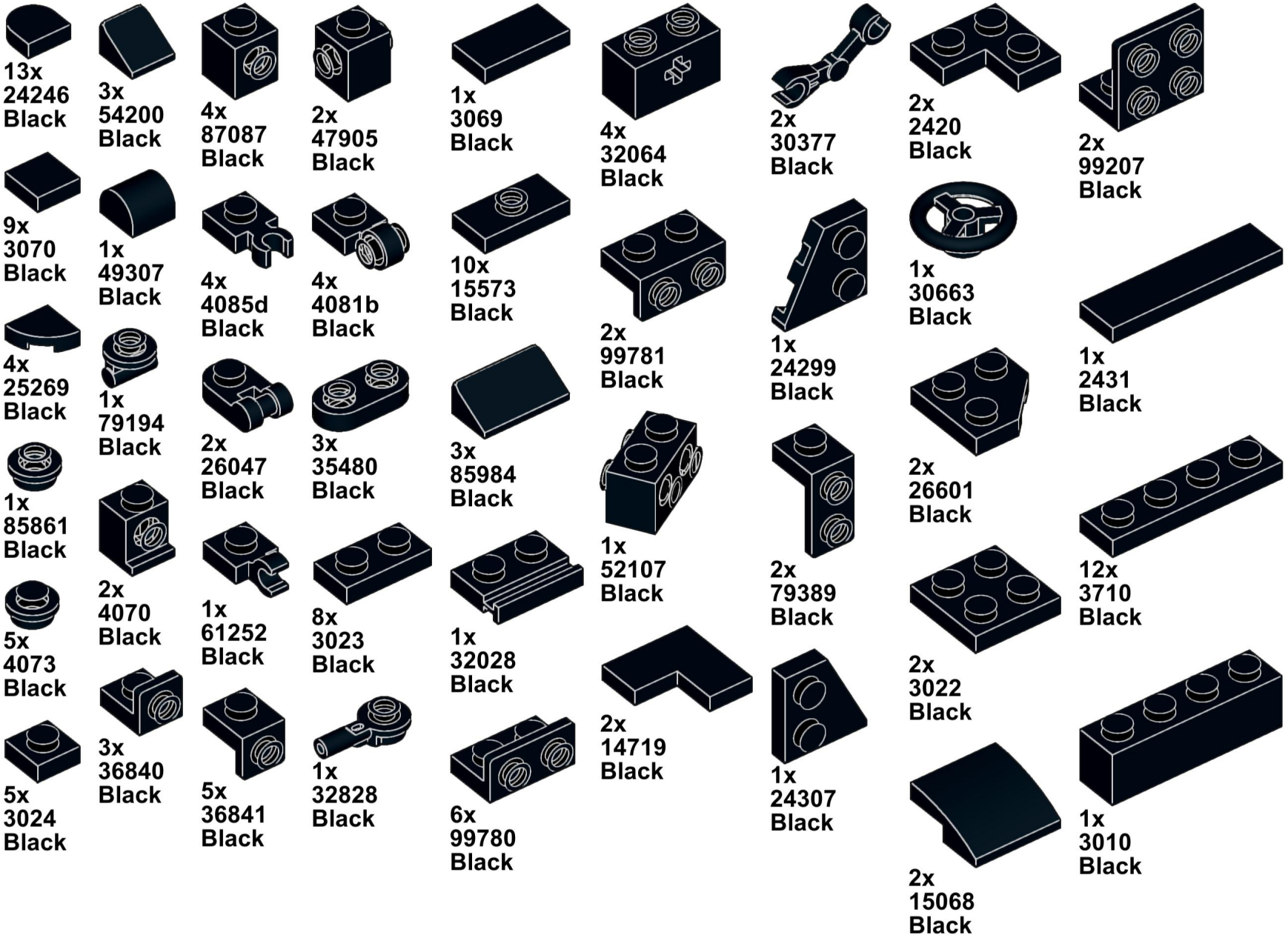
13x
24246
Black
3x
54200
Black
4x
87087
Black
2x
47905
Black
1x
3069
Black
4x
32064
Black
2x
30377
Black
2x
2420
Black
2x
99207
Black
9x
3070
Black
1x
49307
Black
4x
4085d
Black
4x
4081b
Black
10x
15573
Black
2x
99781
Black
1x
24299
Black
1x
30663
Black
4x
25269
Black
1x
79194
Black
2x
26047
Black
3x
35480
Black
3x
85984
Black
1x
52107
Black
2x
79389
Black
2x
26601
Black
1x
2431
Black
1x
85861
Black
2x
4070
Black
1x
61252
Black
8x
3023
Black
1x
32028
Black
2x
14719
Black
2x
3022
Black
12x
3710
Black
5x
4073
Black
3x
36840
Black
5x
36841
Black
1x
32828
Black
6x
99780
Black
1x
24307
Black
2x
15068
Black
1x
3010
Black
5x
3024
Black

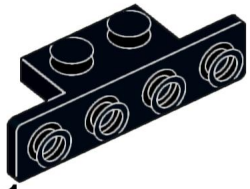

1x
2436b
Black



2x
30414
Black



1x
3020
Black



3x
3666
Black

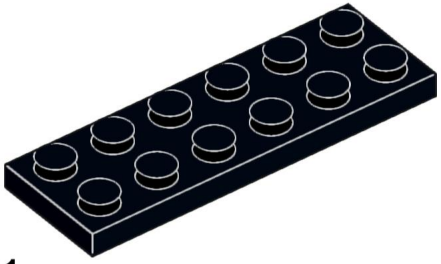

1x
3795
Black

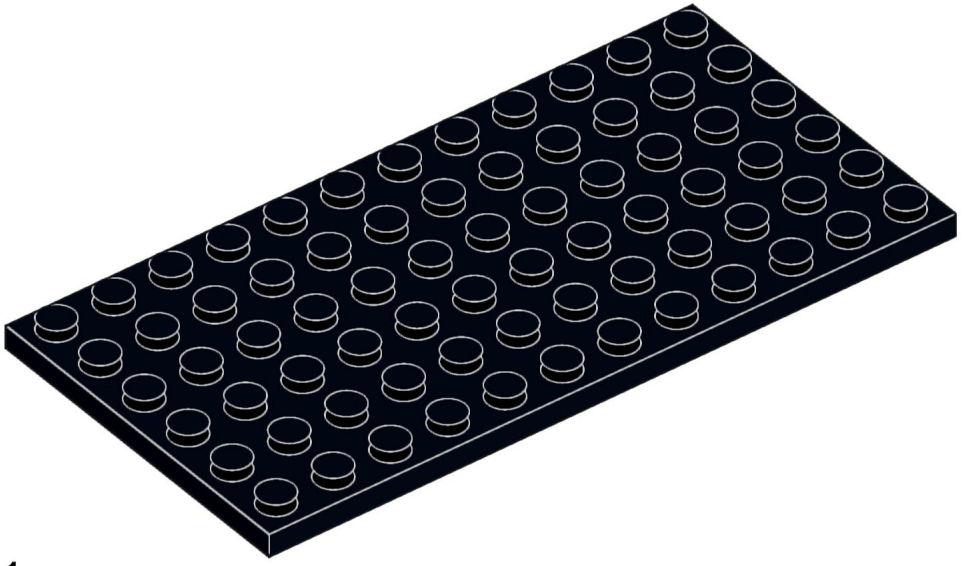

1x
3028
Black



2x
24246
Dark Bluish Gray

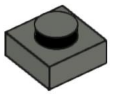

2x
3024
Dark Bluish Gray

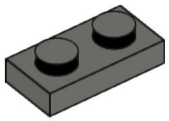

1x
3023
Dark Bluish Gray



6x
4070
Dark Bluish Gray

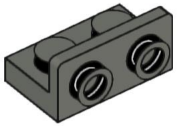

2x
99780
Dark Bluish Gray



1x
32828
Dark Bluish Gray

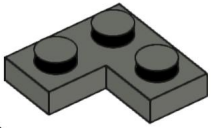

2x
2420
Dark Bluish Gray

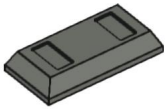

1x
99563
Dark Bluish Gray

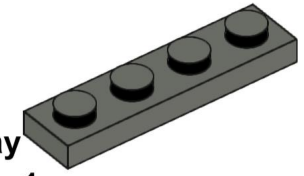

1x
3710
Dark Bluish Gray



5x
35480
Dark Bluish Gray

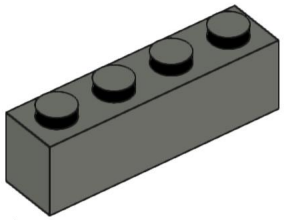

1x
3010
Dark Bluish Gray

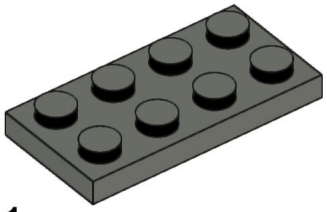

1x
3020
Dark Bluish Gray

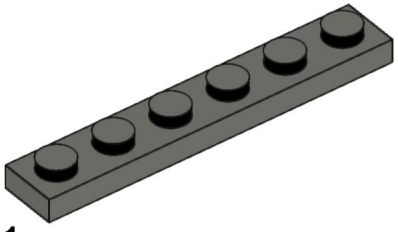

1x
3666
Dark Bluish Gray



1x
24246
Light Bluish Gray



2x
25269
Light Bluish Gray

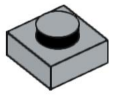

6x
3024
Light Bluish Gray

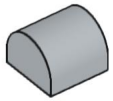

2x
49307
Light Bluish Gray

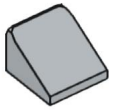

4x
54200
Light Bluish Gray



3x
20482
Light Bluish Gray



1x
90370
Light Bluish Gray

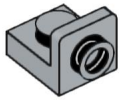

1x
36840
Light Bluish Gray

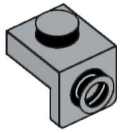

1x
36841
Light Bluish Gray

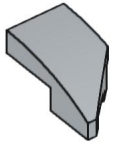

1x
29120
Light Bluish Gray



2x
32828
Light Bluish Gray

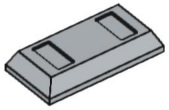

1x
99563
Light Bluish Gray

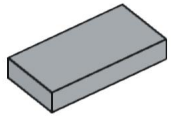

1x
3069
Light Bluish Gray

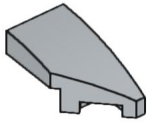

1x
29119
Light Bluish Gray

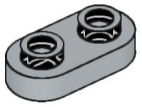

3x
35480
Light Bluish Gray

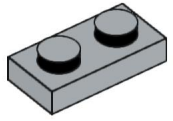

4x
3023
Light Bluish Gray

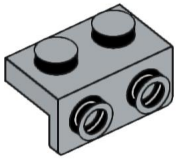

1x
99781
Light Bluish Gray

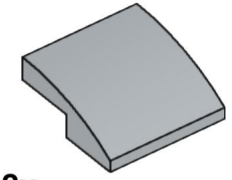

2x
15068
Light Bluish Gray

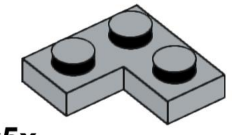

5x
2420
Light Bluish Gray

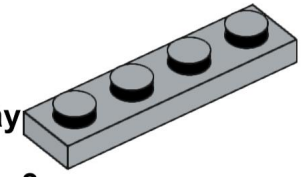

3x
3710
Light Bluish Gray

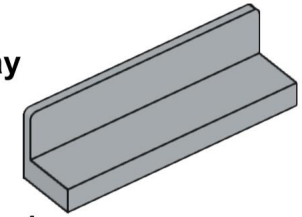

1x
30413
Light Bluish Gray

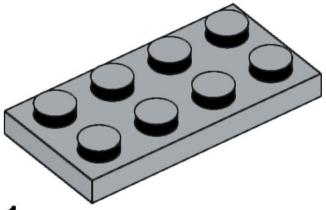

1x
3020
Light Bluish Gray

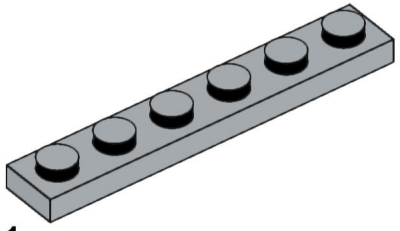

1x
3666
Light Bluish Gray

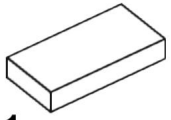

1x
3069
White

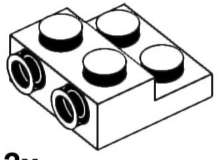

2x
99206
White

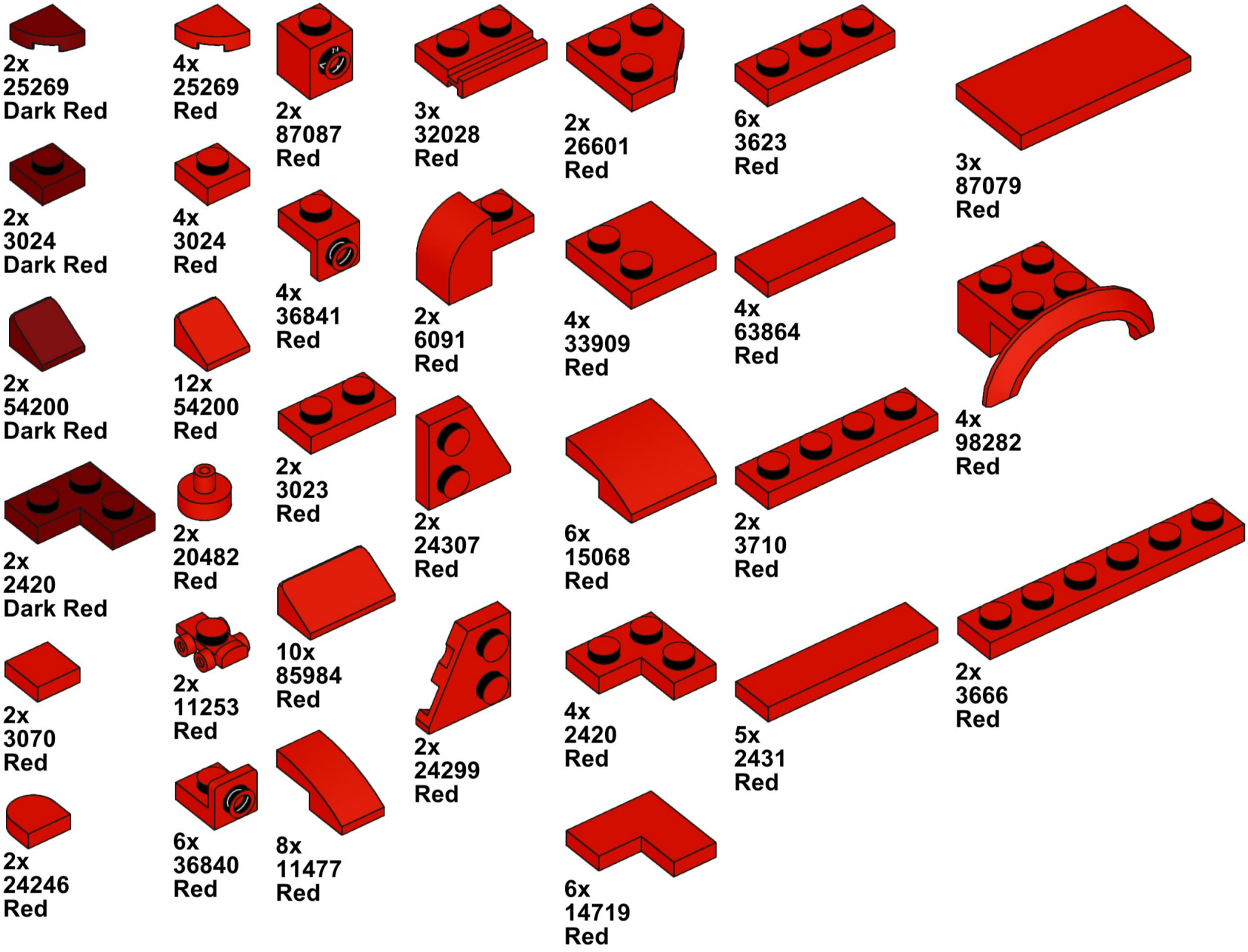
2x
25269
Dark Red
4x
25269
Red
2x
87087
Red
3x
32028
Red
2x
26601
Red
6x
3623
Red
3x
87079
Red
2x
3024
Dark Red
4x
3024
Red
4x
36841
Red
2x
6091
Red
4x
33909
Red
4x
63864
Red
4x
98282
Red
2x
54200
Dark Red
12x
54200
Red
2x
3023
Red
2x
24307
Red
6x
15068
Red
2x
3710
Red
2x
2420
Dark Red
2x
20482
Red
10x
85984
Red
2x
24299
Red
4x
2420
Red
5x
2431
Red
2x
3666
Red
2x
3070
Red
2x
11253
Red
2x
24246
Red
6x
36840
Red
8x
11477
Red
6x
14719
Red

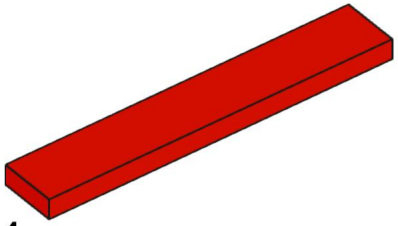

4x
6636
Red

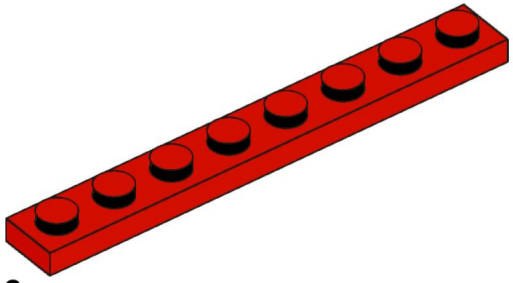

2x
3460
Red

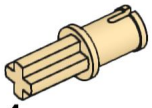

4x
3749
Tan



2x
4073
Yellow



11x
85861
Yellow

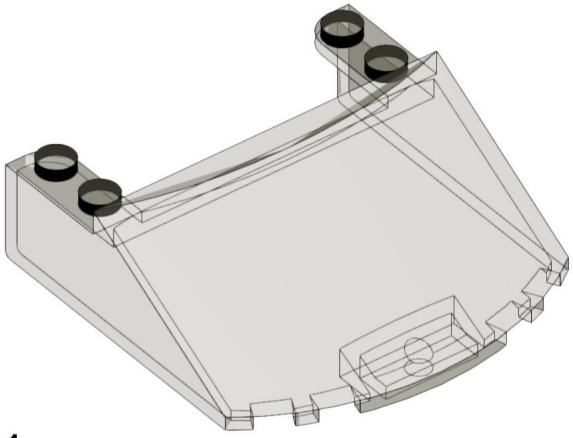

1x
65632
Trans-Brown

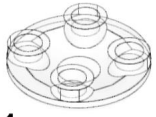

1x
2654
Trans-Clear

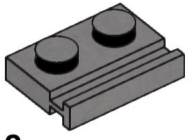

2x
32028
Flat Silver



4x
18978a
Flat Silver

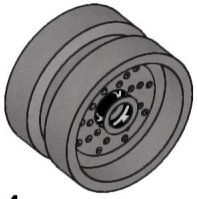

4x
66727
Flat Silver



4x
18977
Rubber Black