1



# 2

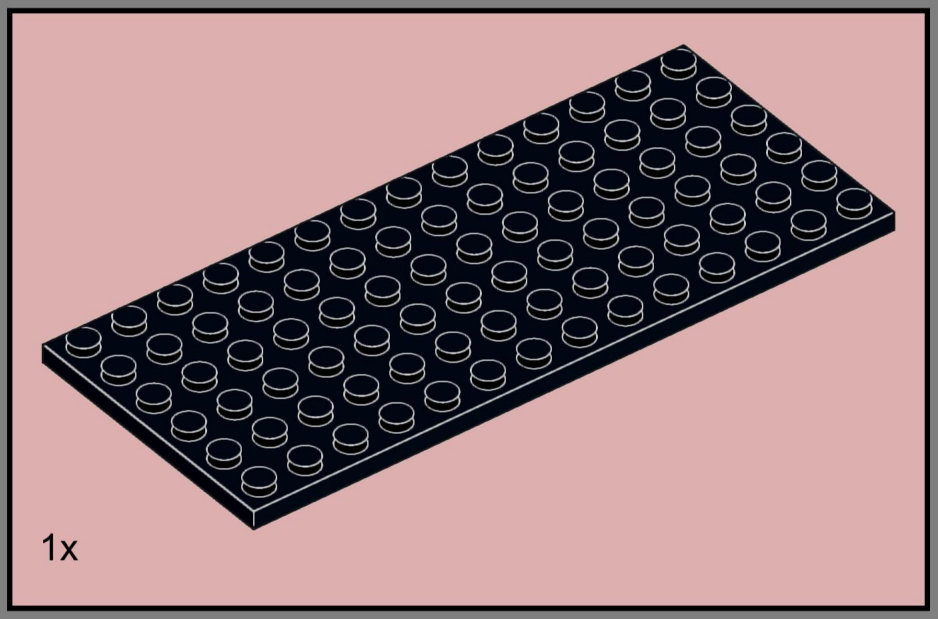


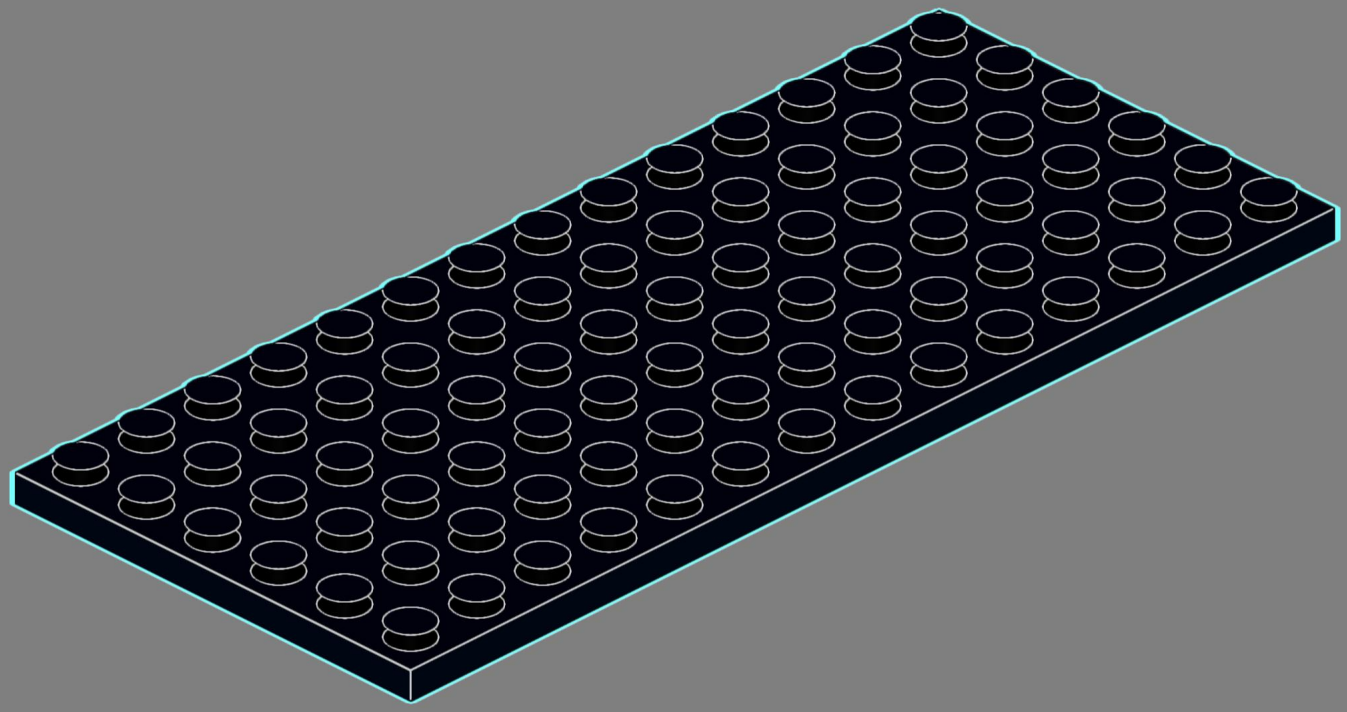

# 3

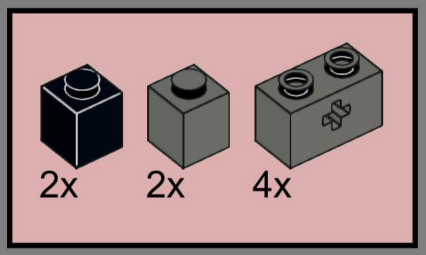


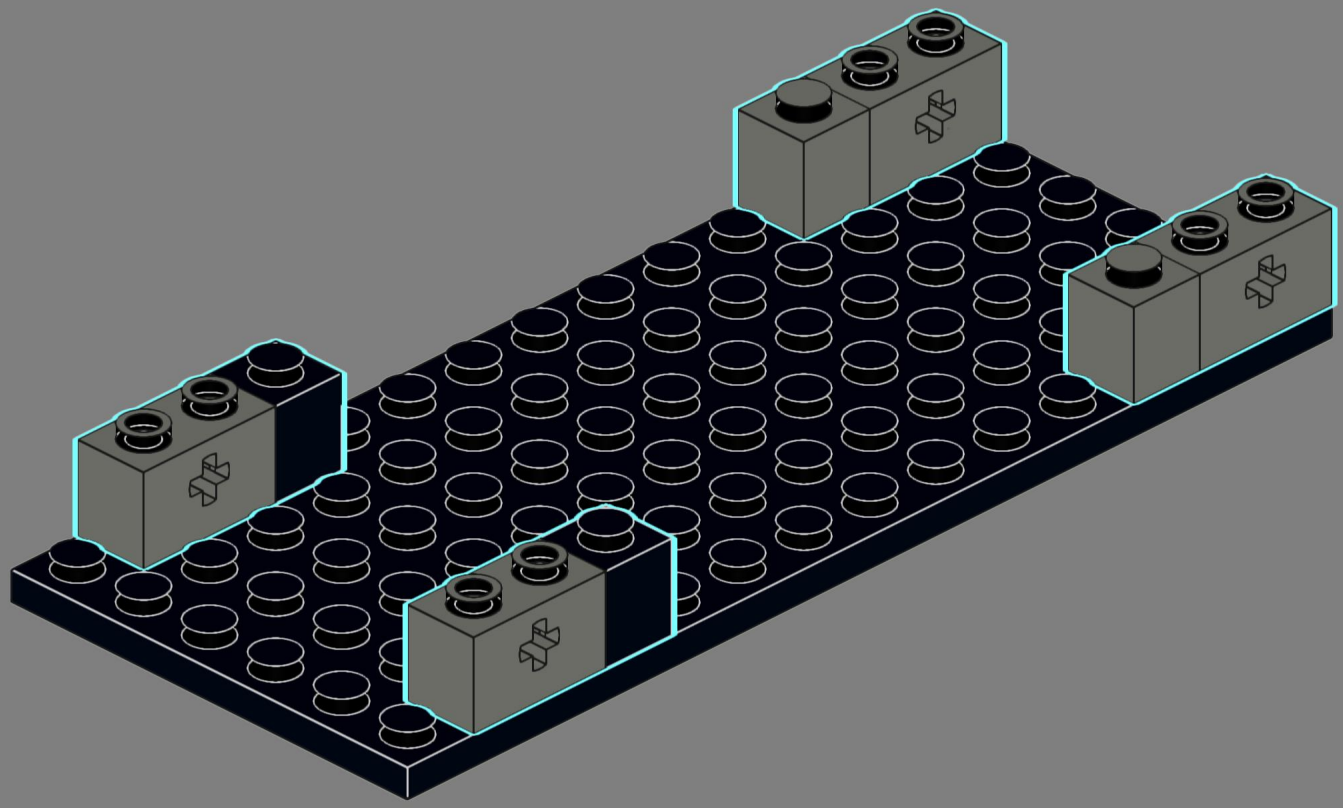

# 4

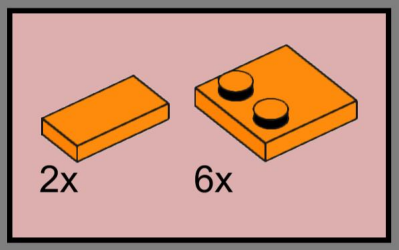


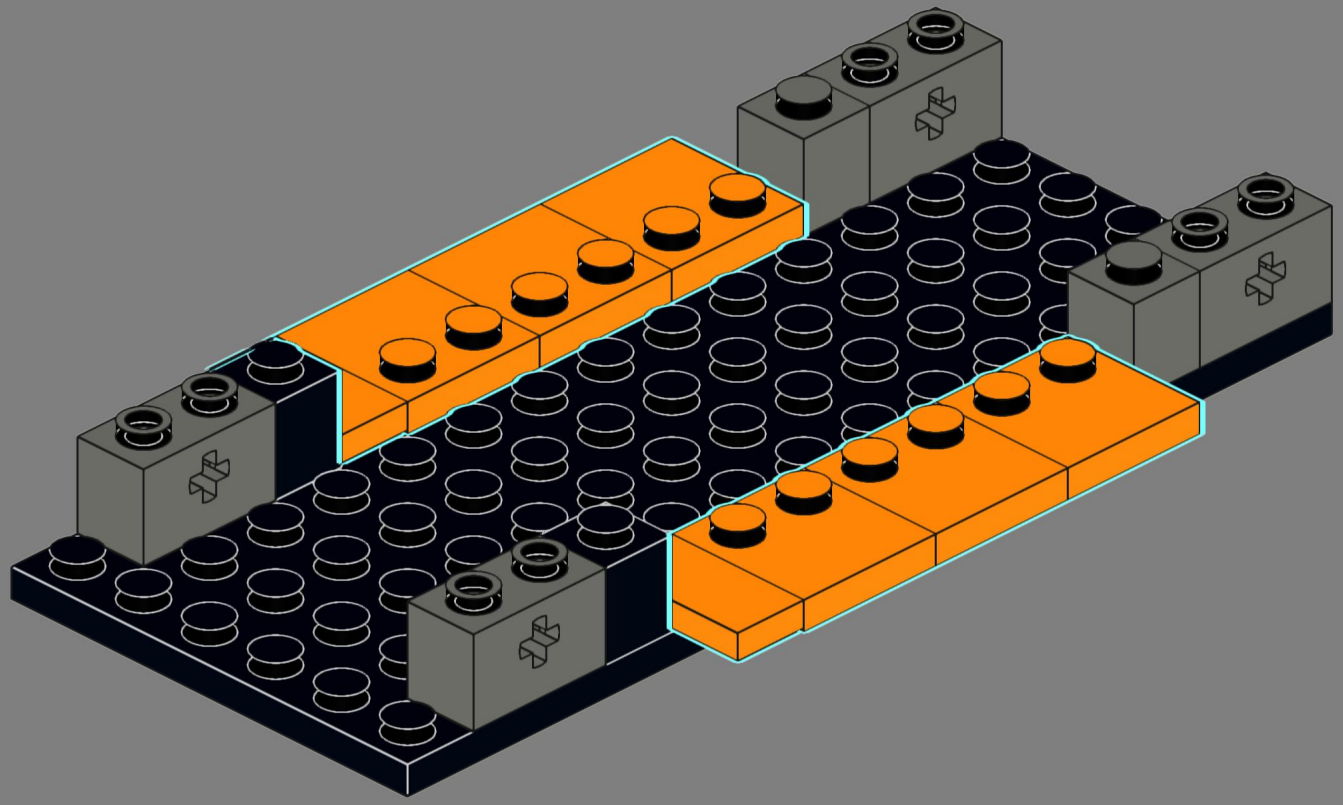

# 5

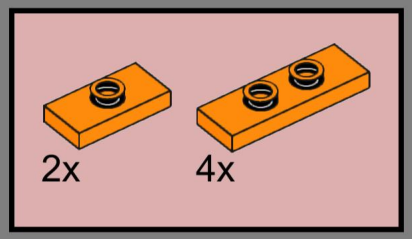


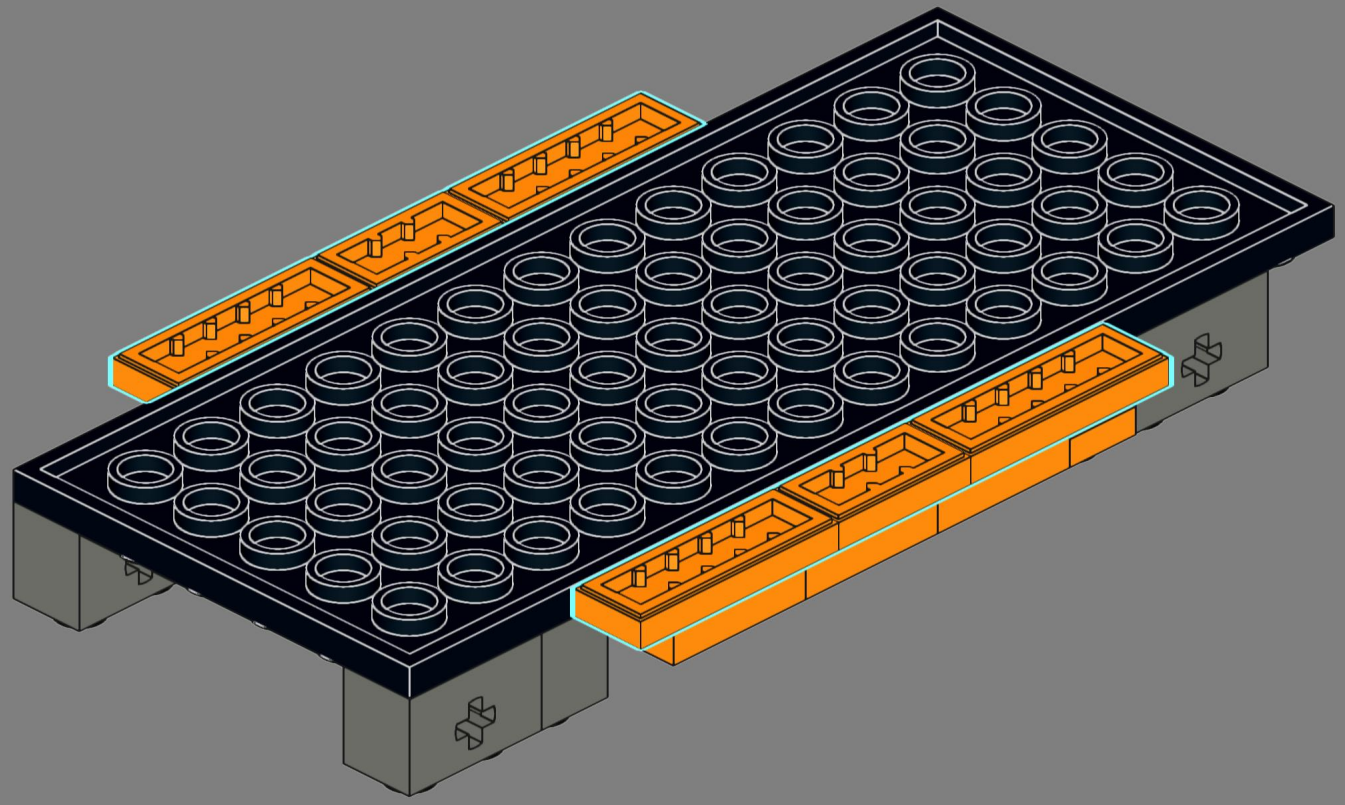

# 6

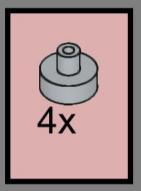


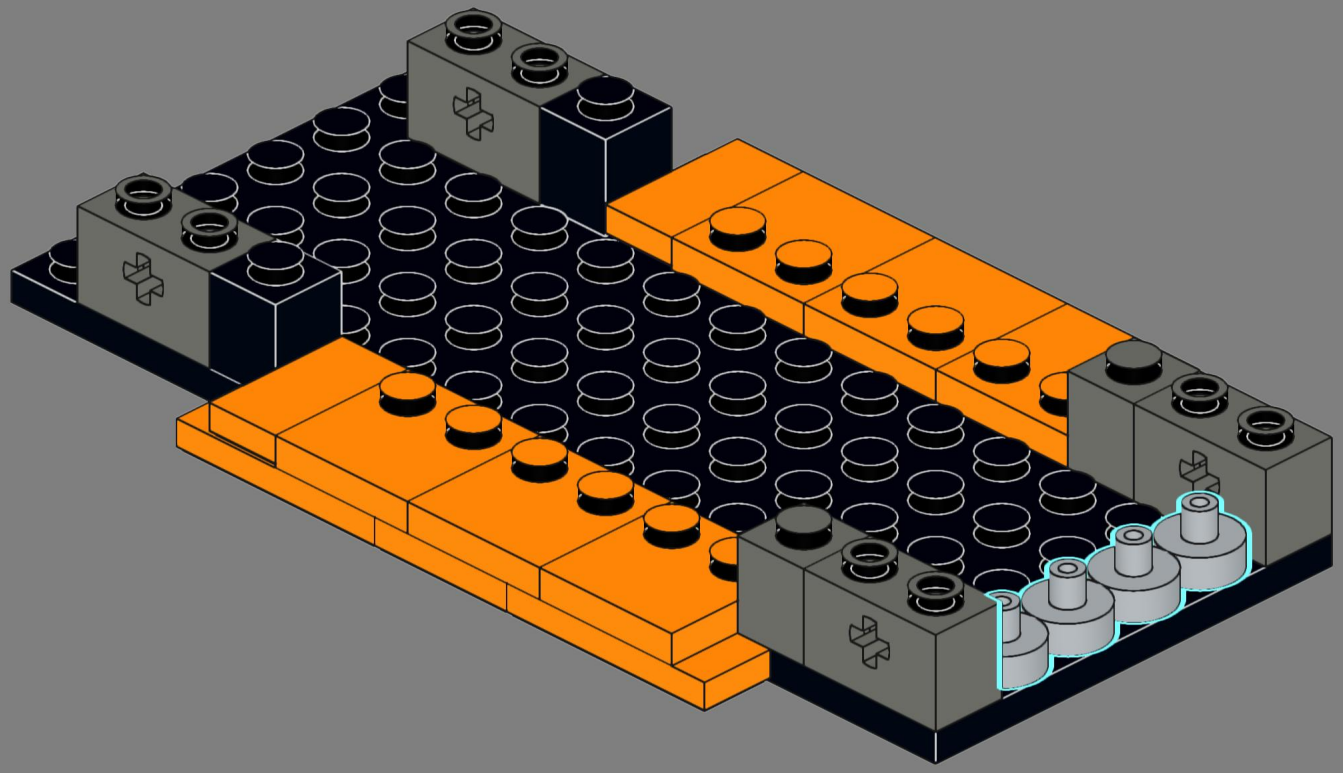

# 7

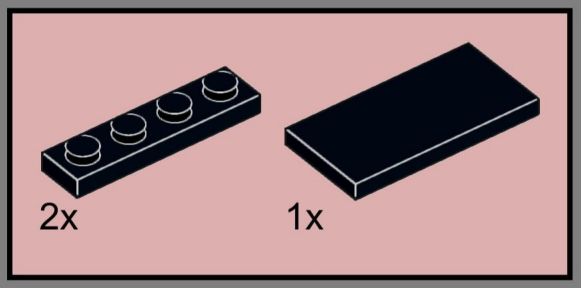


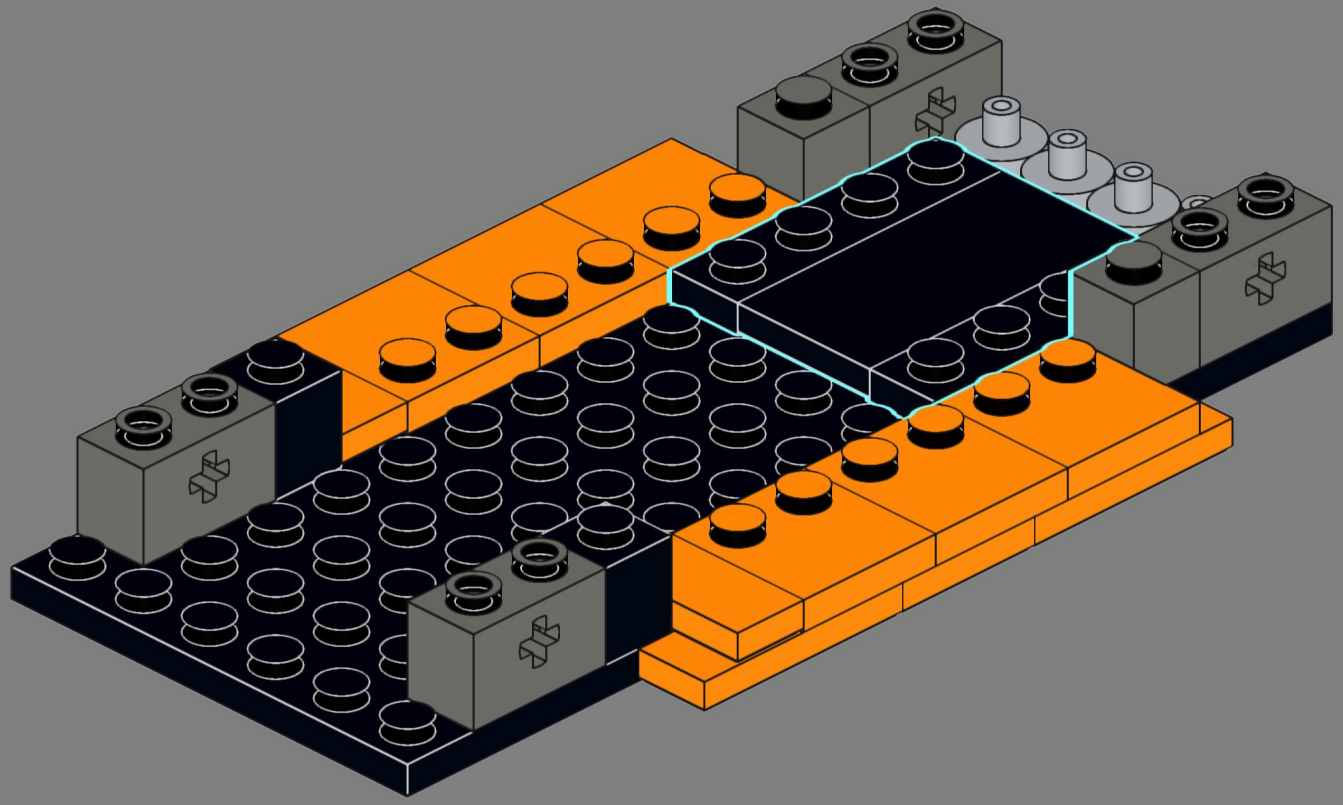

# 8

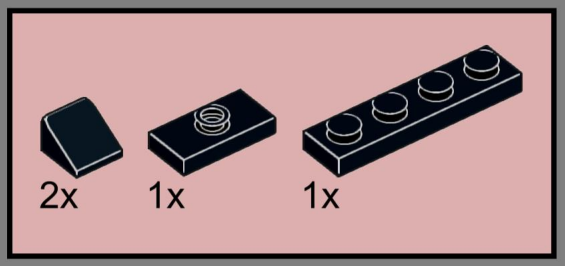


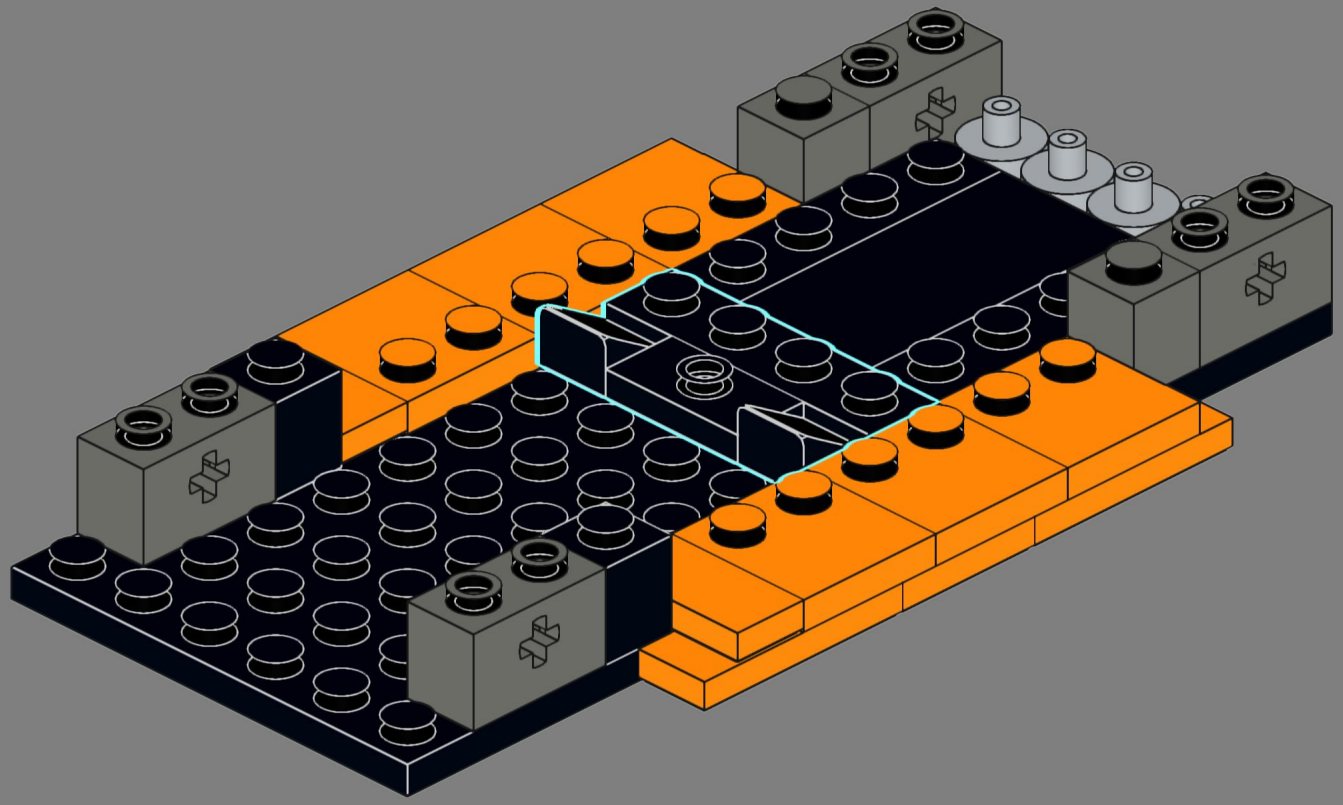

# 9

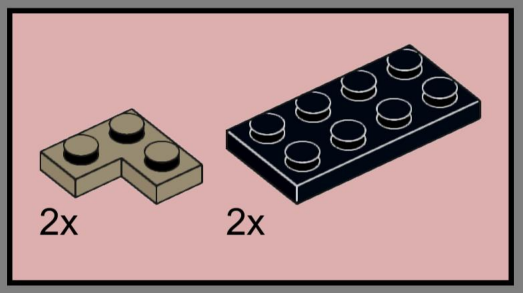


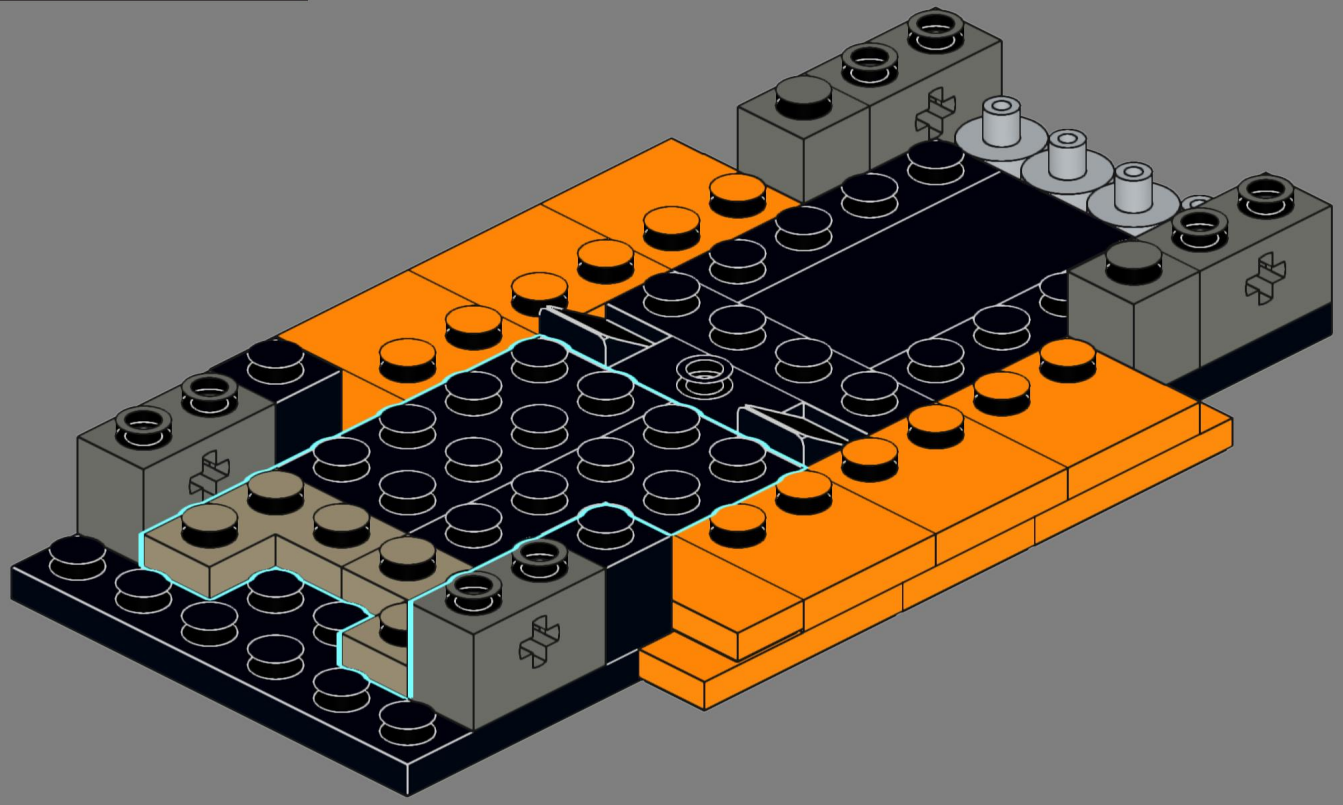

# 10

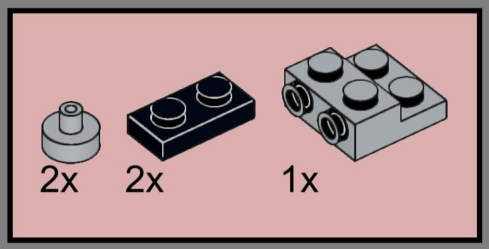


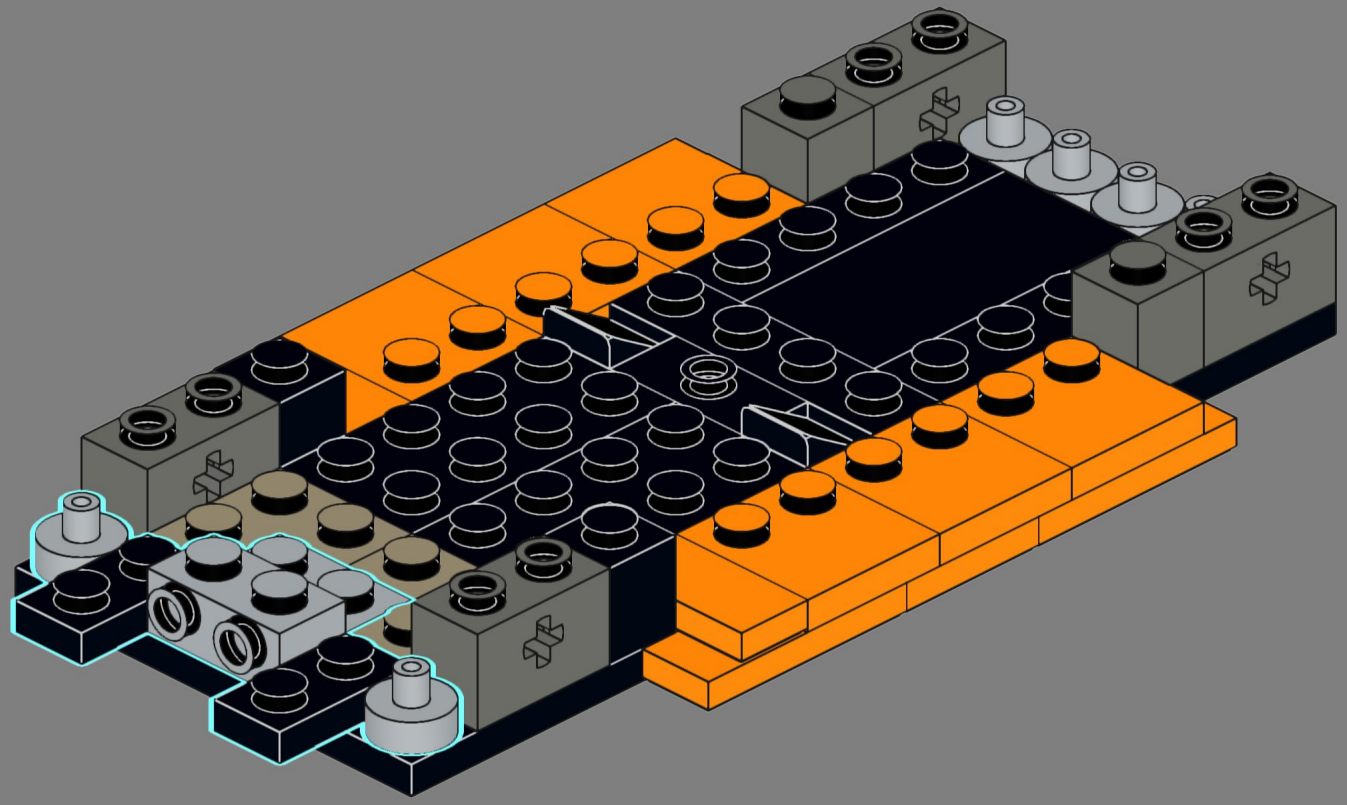

# 11

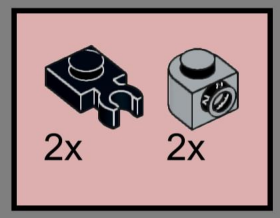


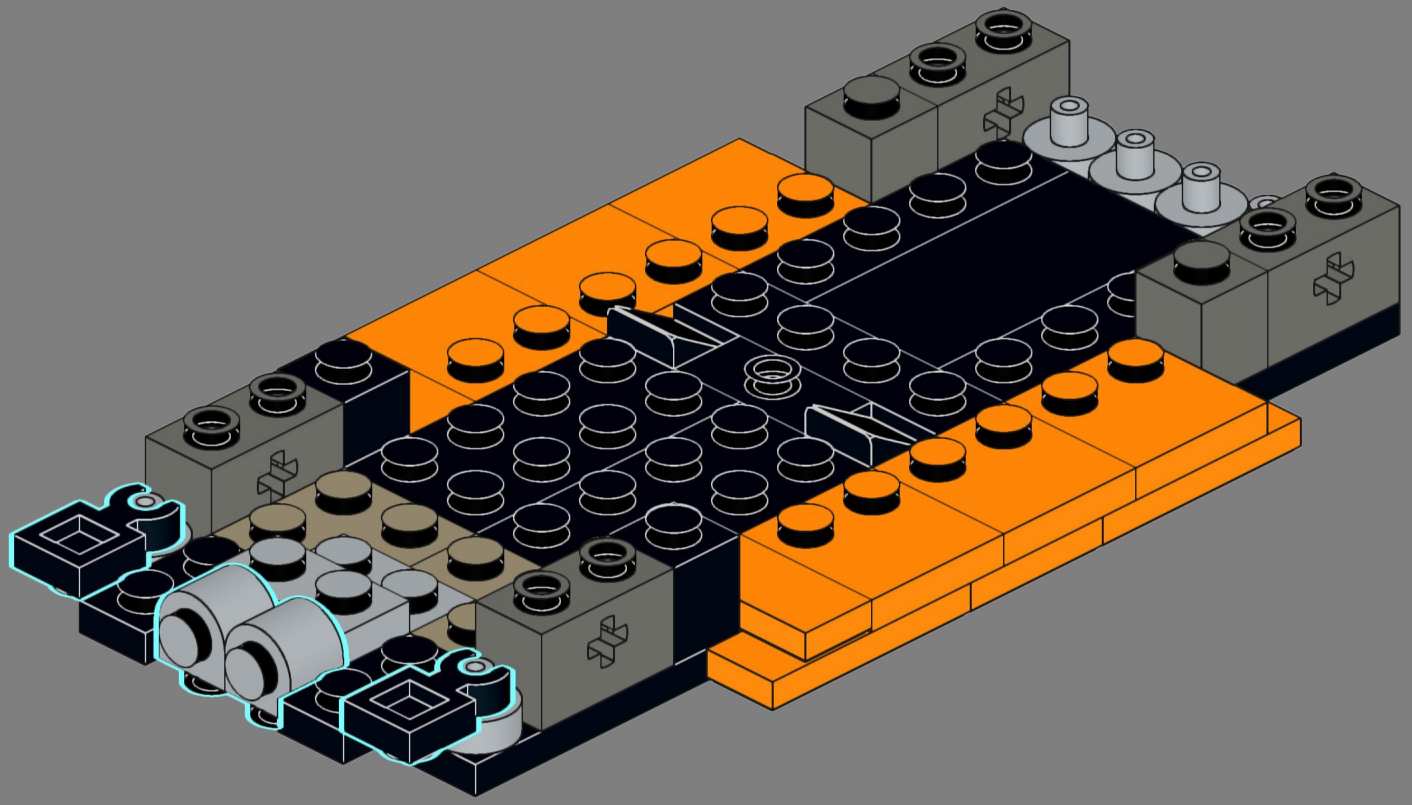

# 12

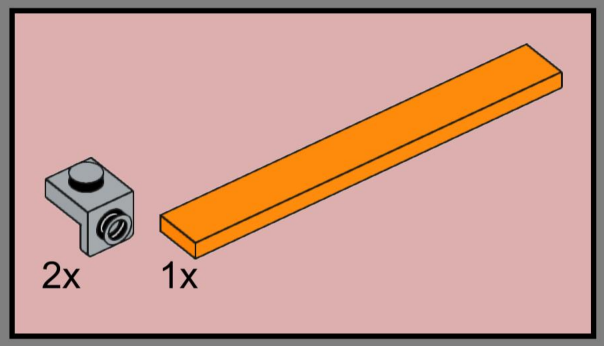


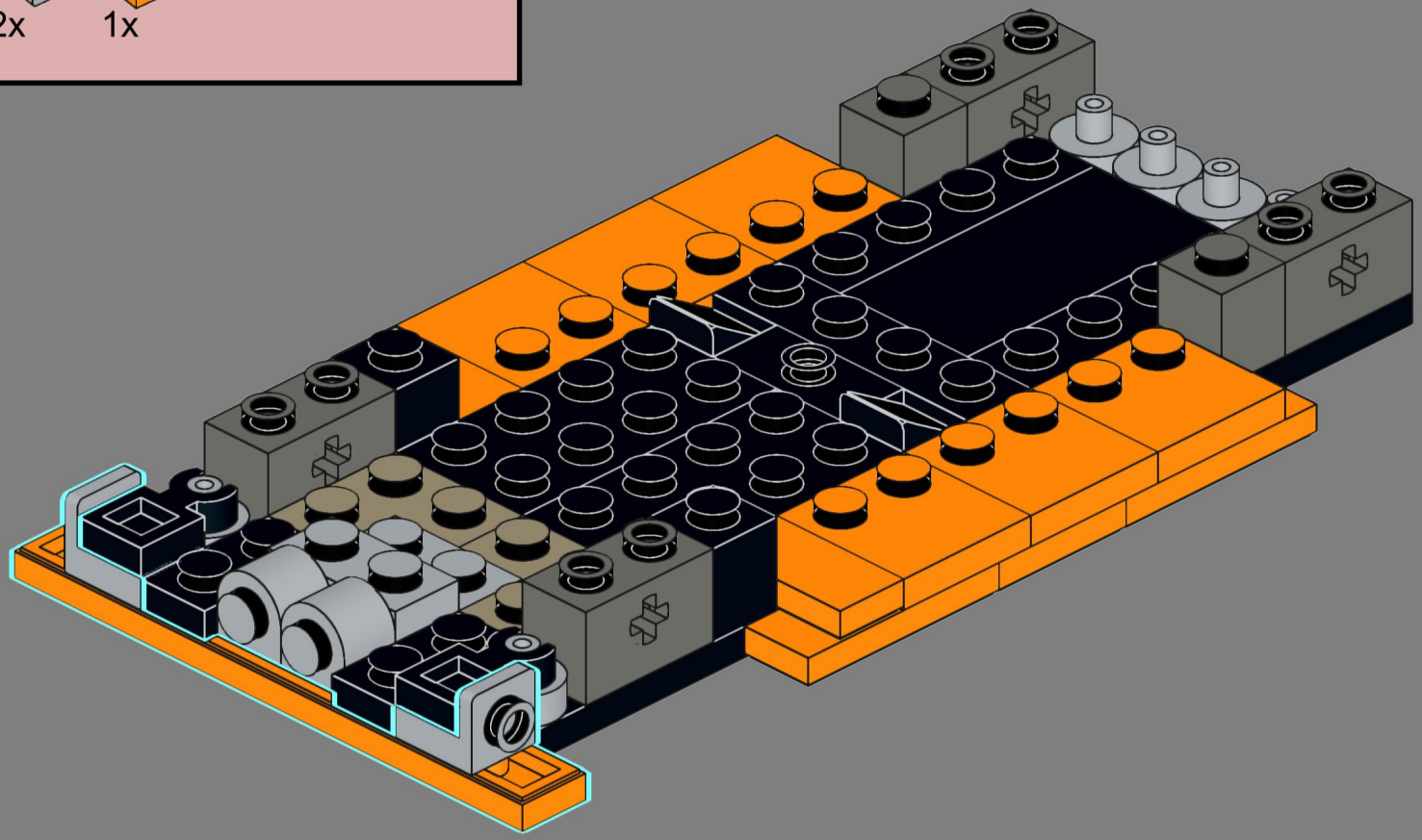

# 13

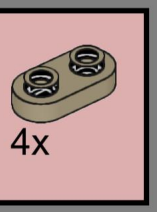


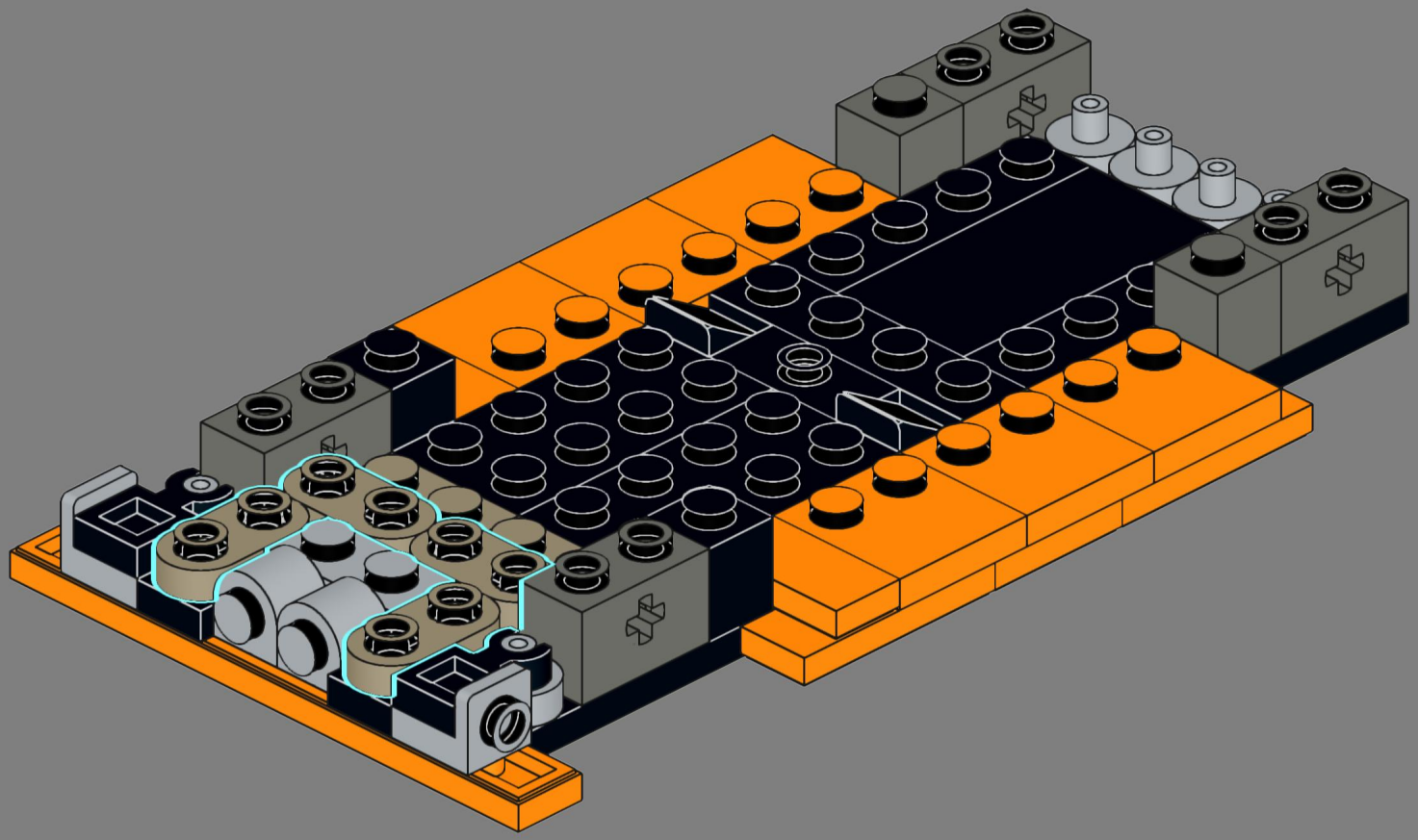

# 14

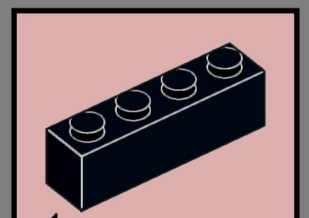


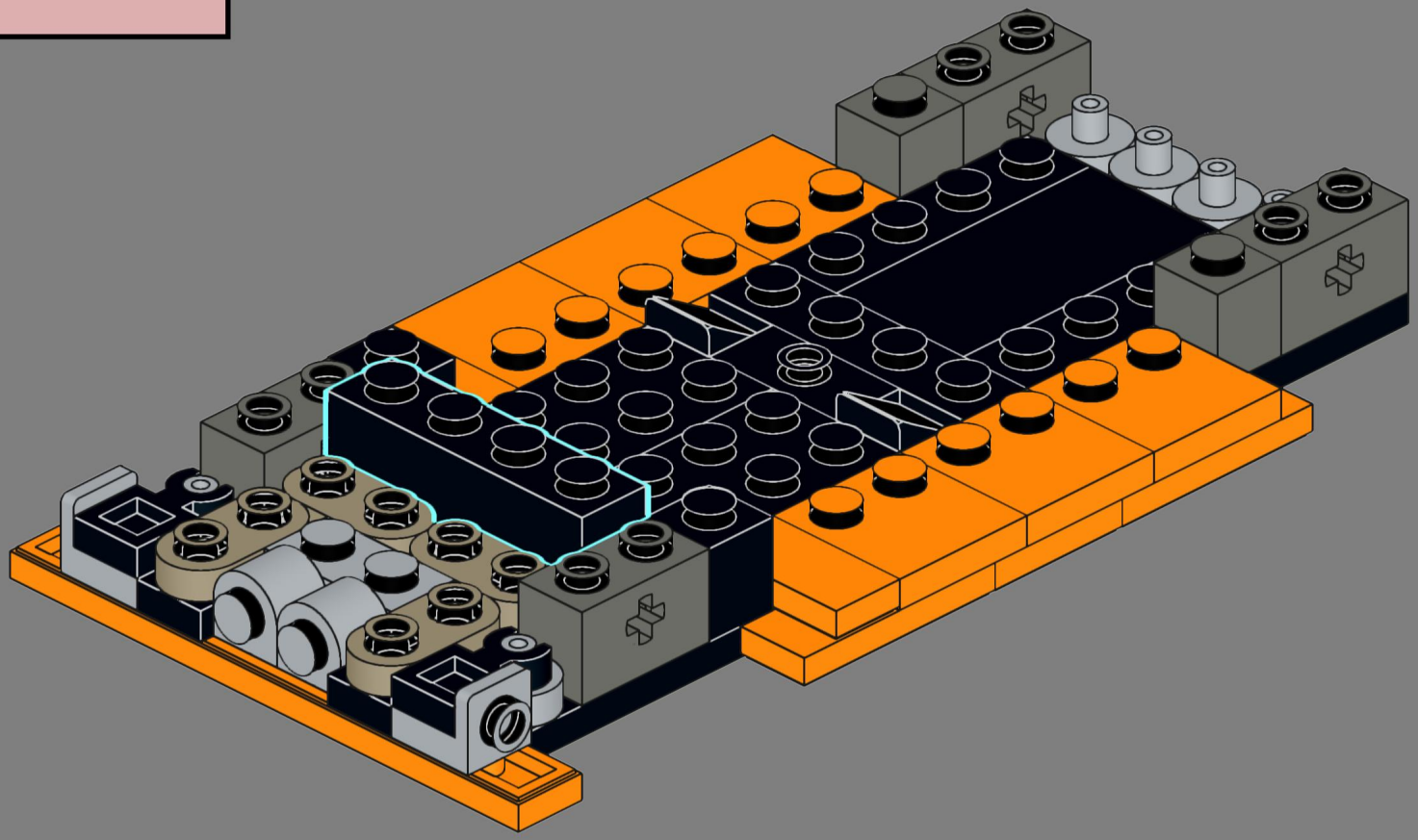

# 15

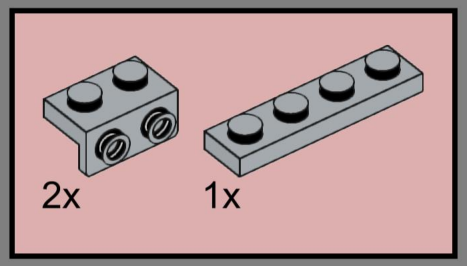


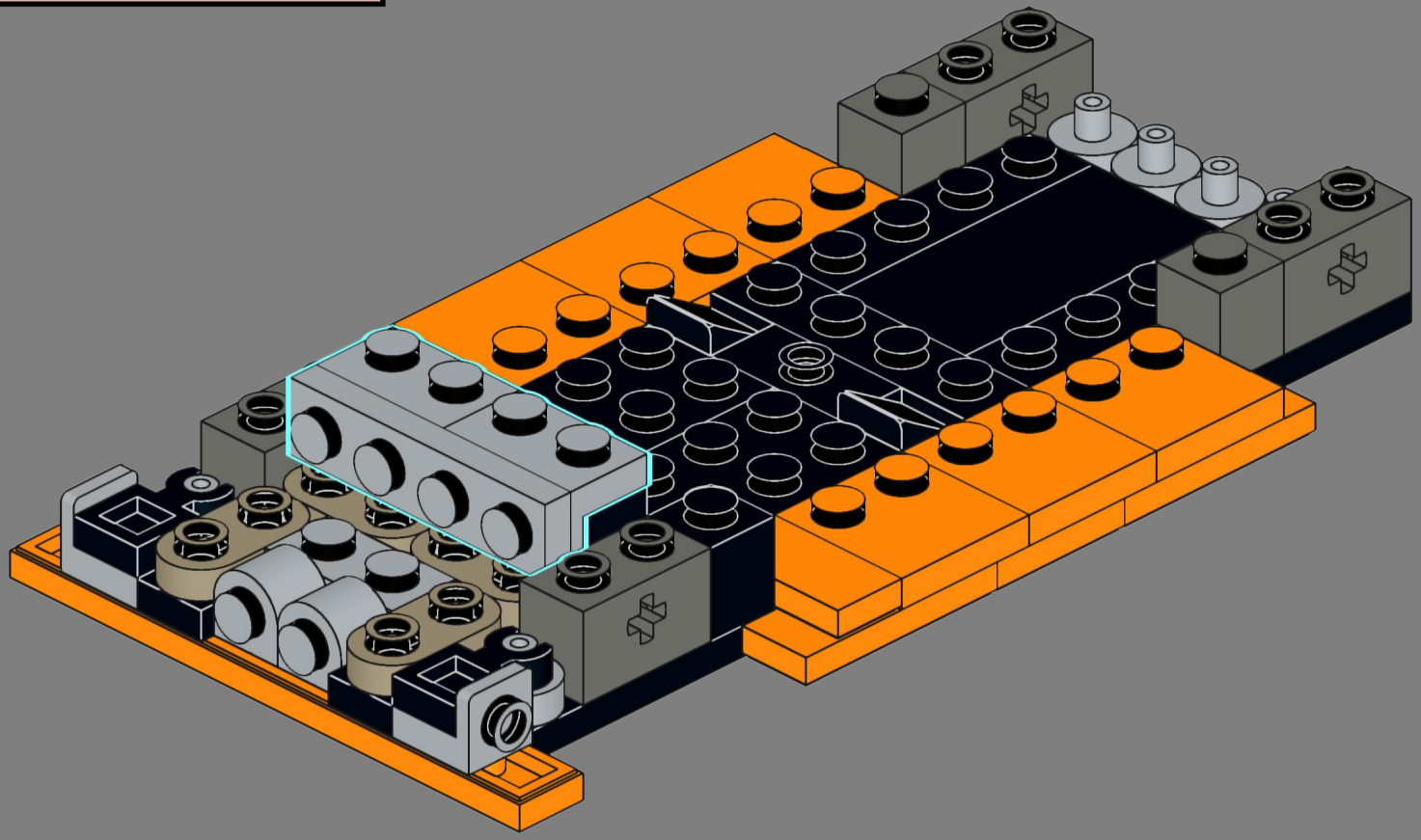

# 16

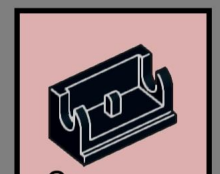


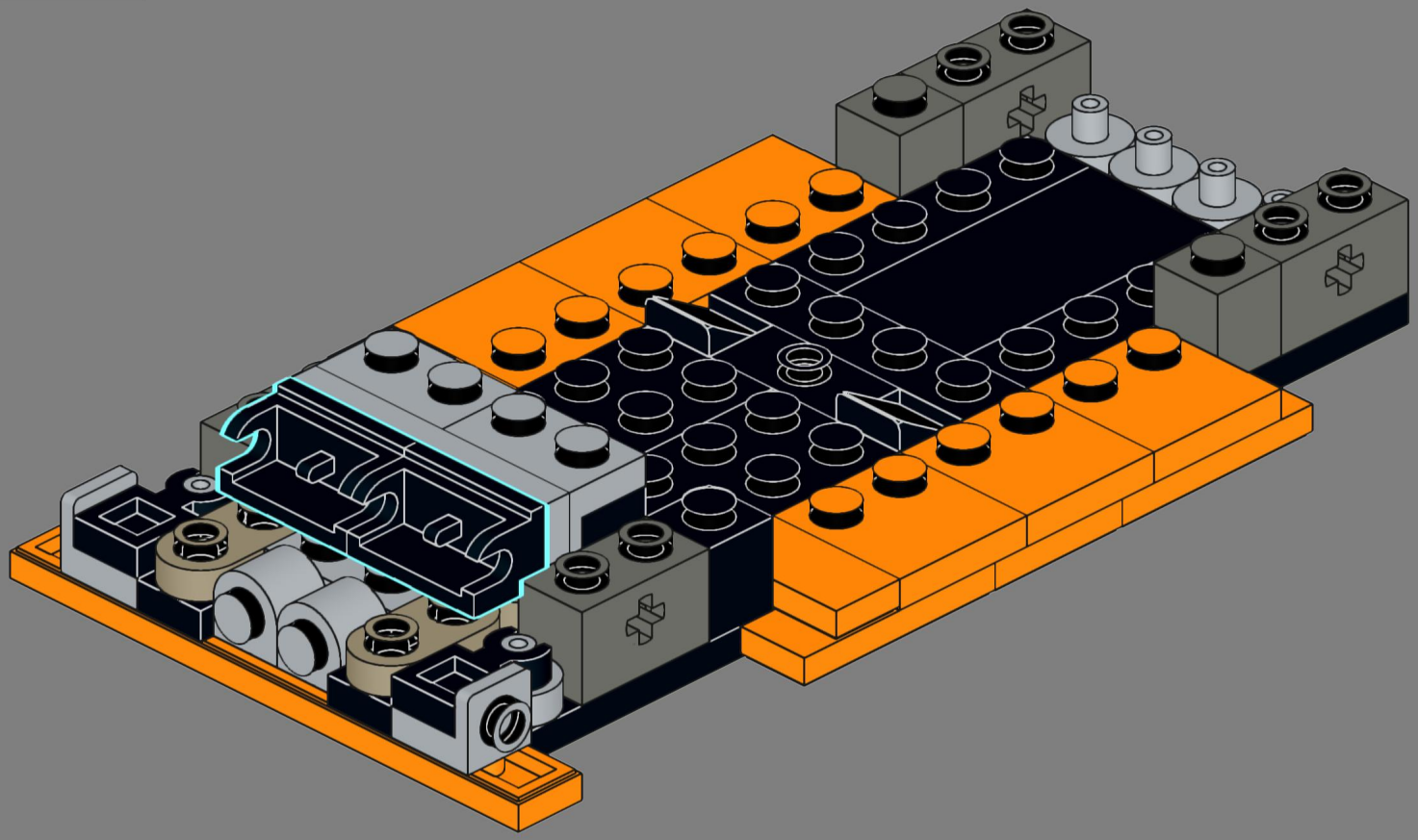

# 17

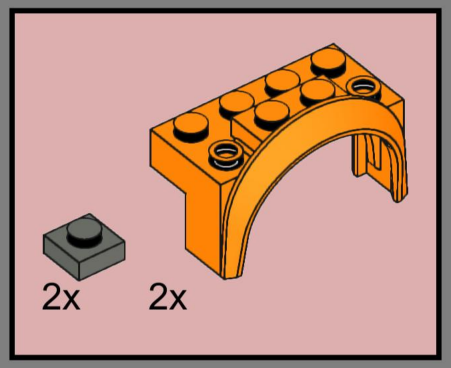


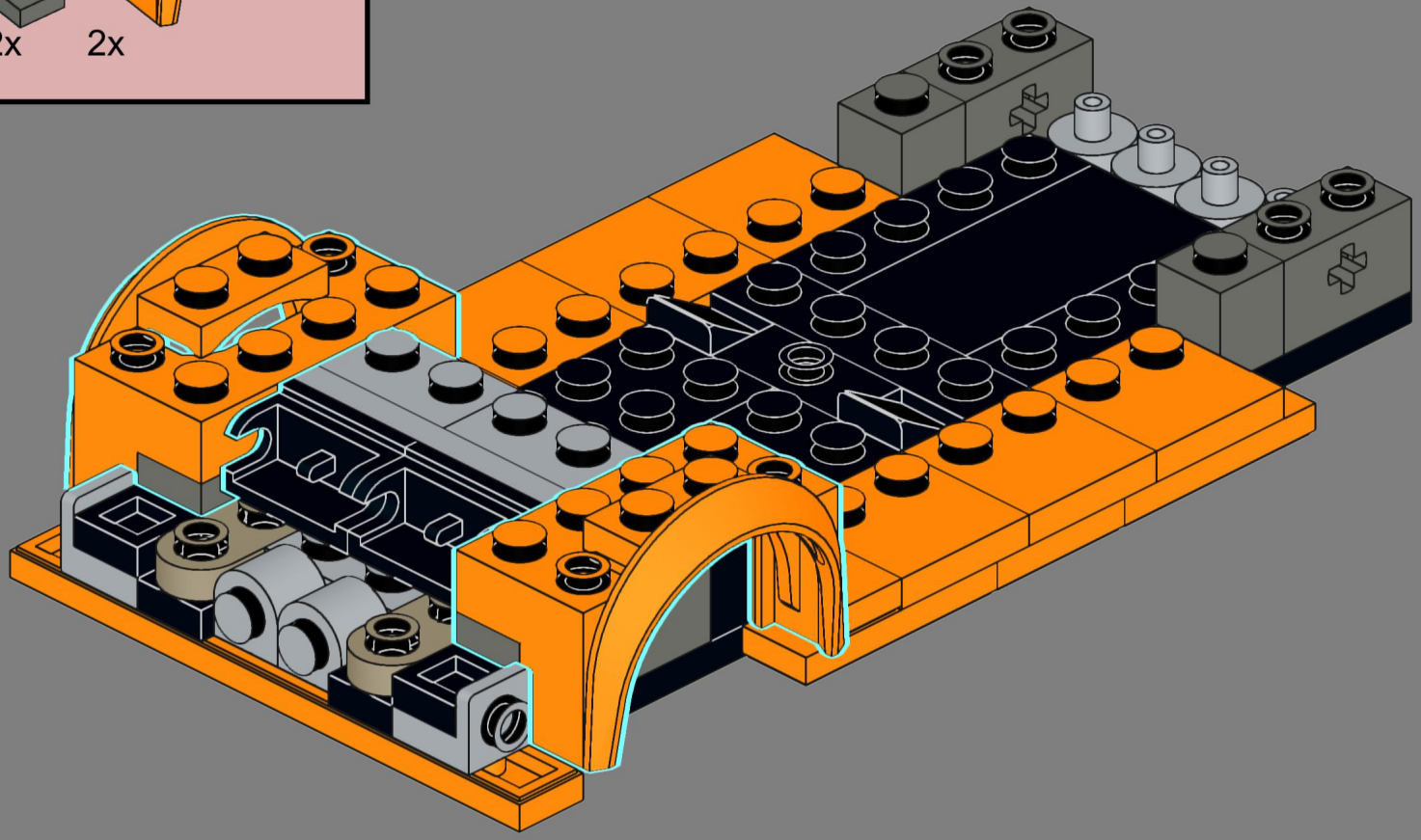

# 18

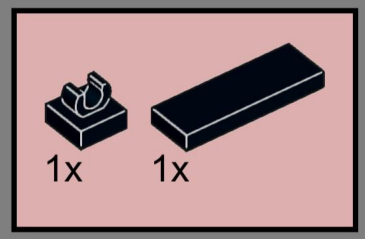


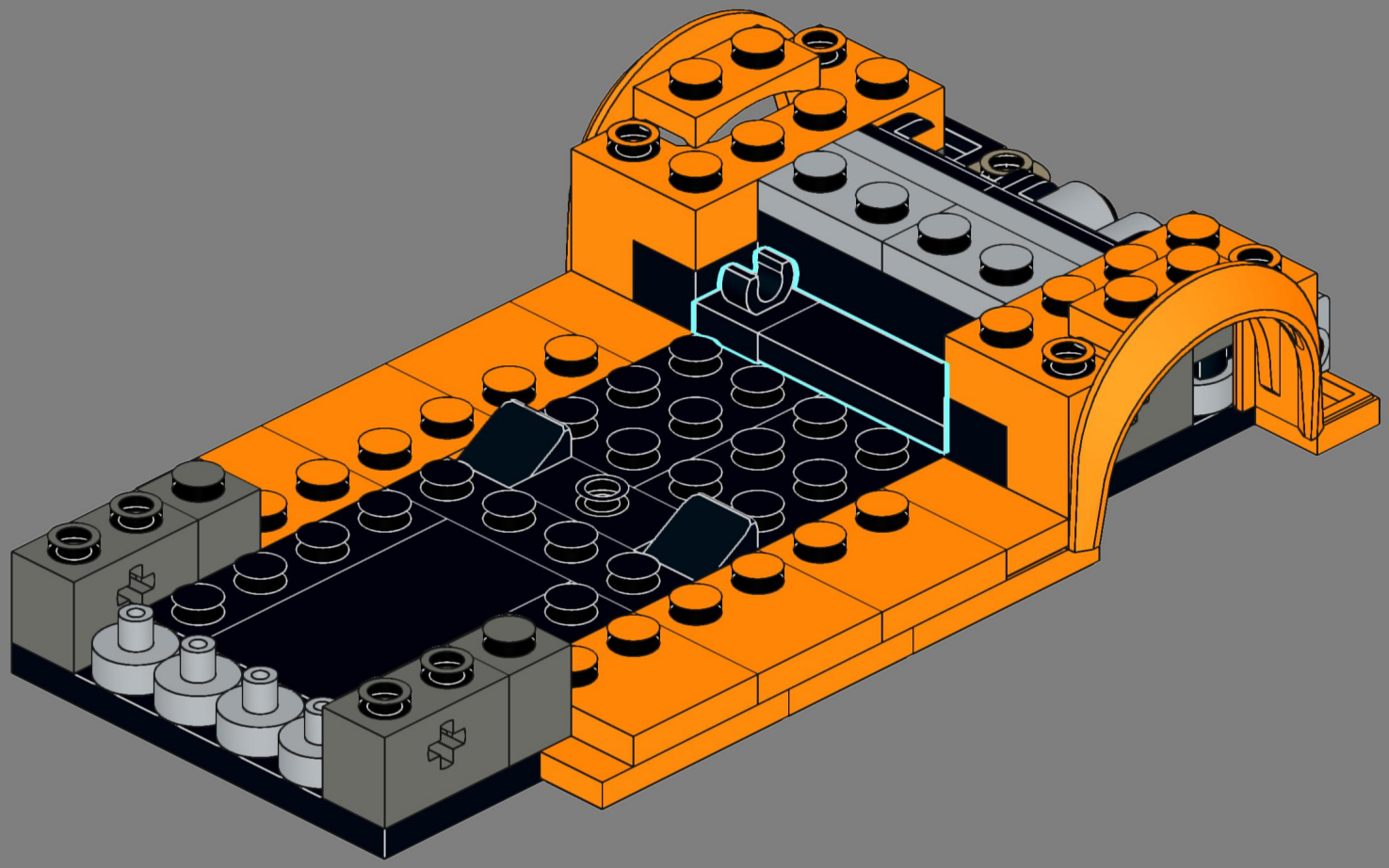

# 19

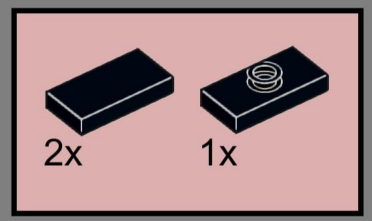


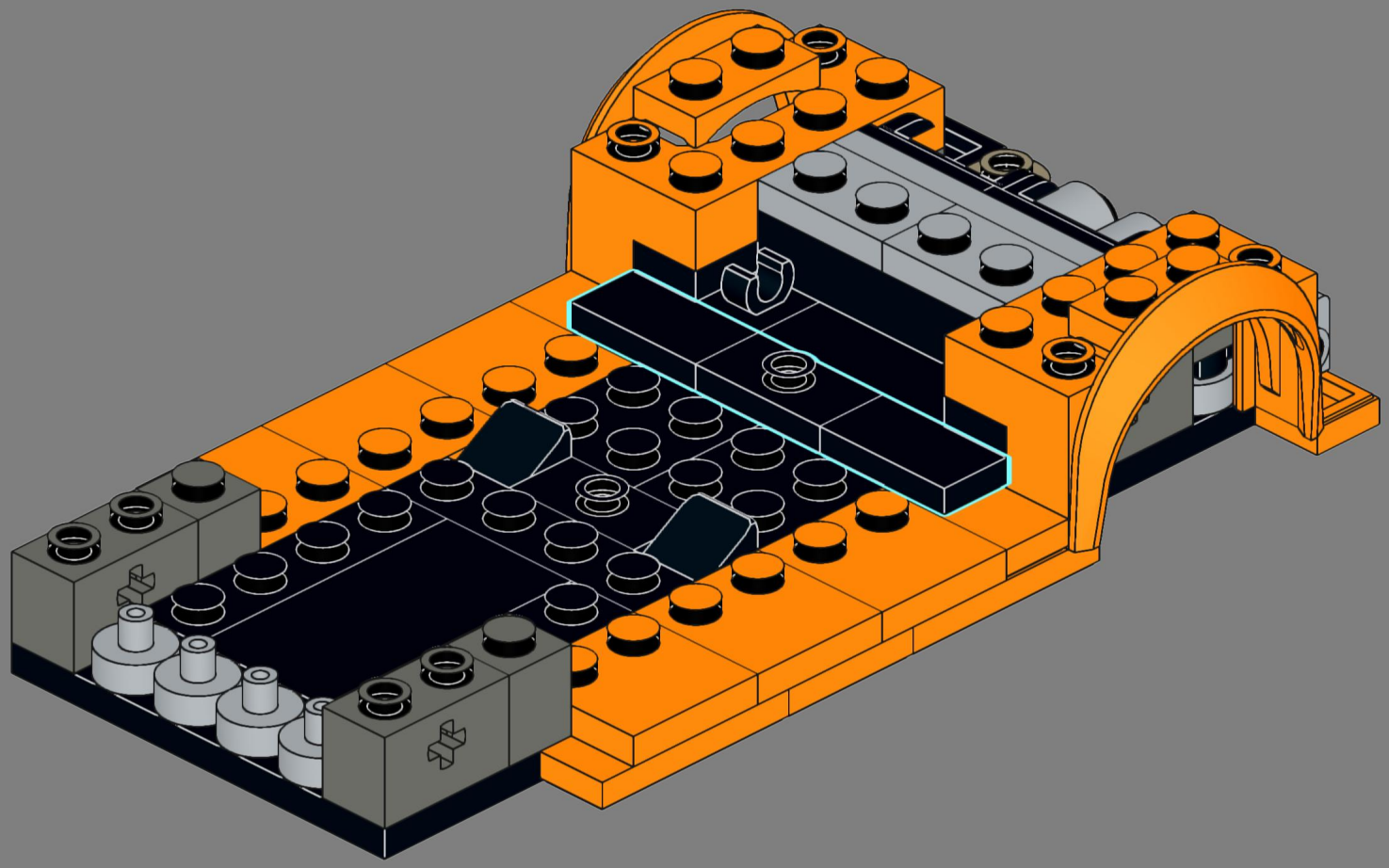

# 20

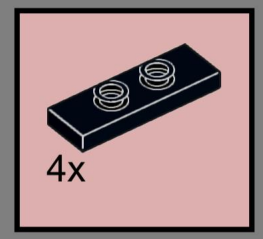


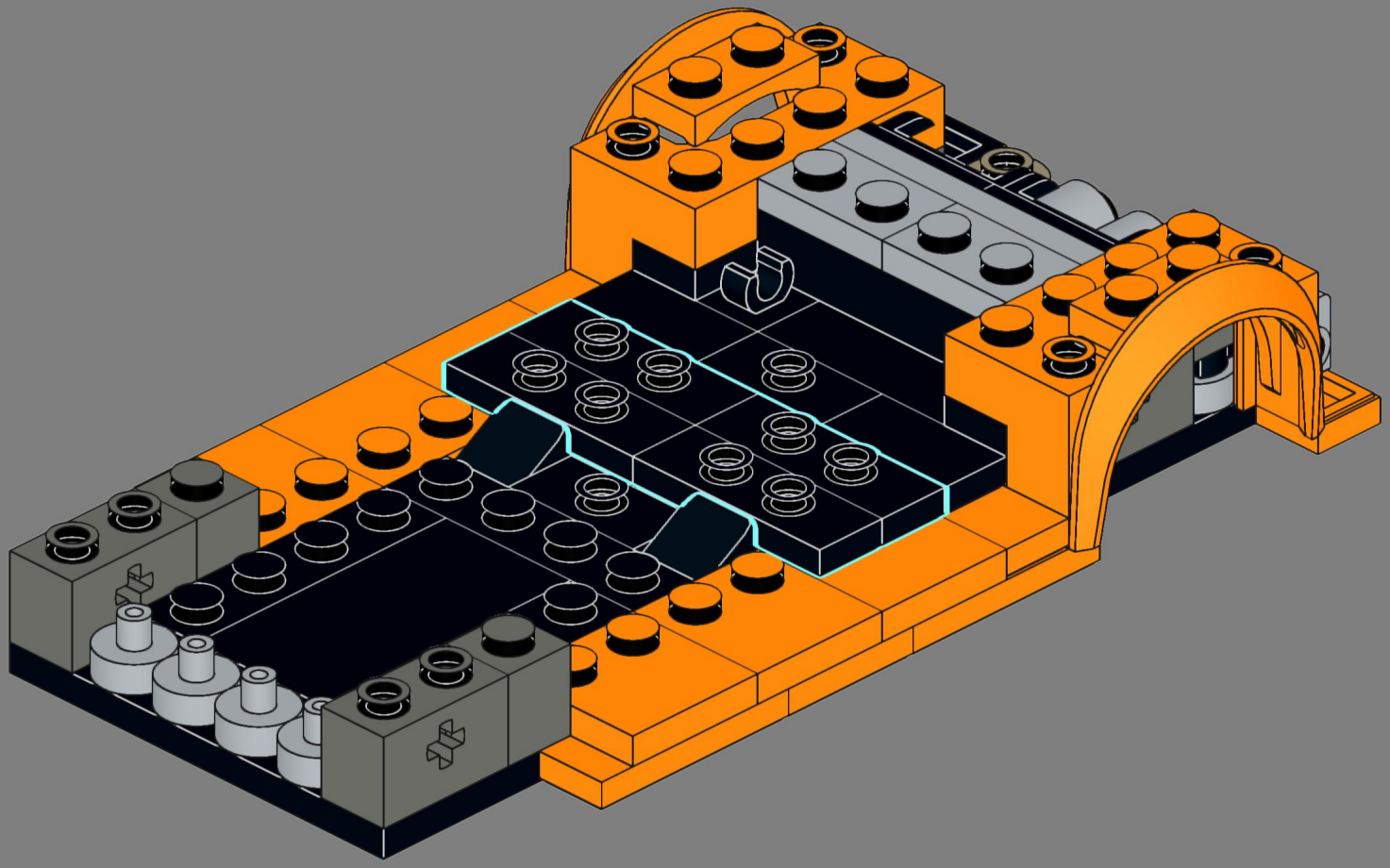

# 21

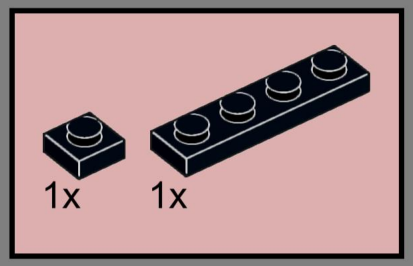


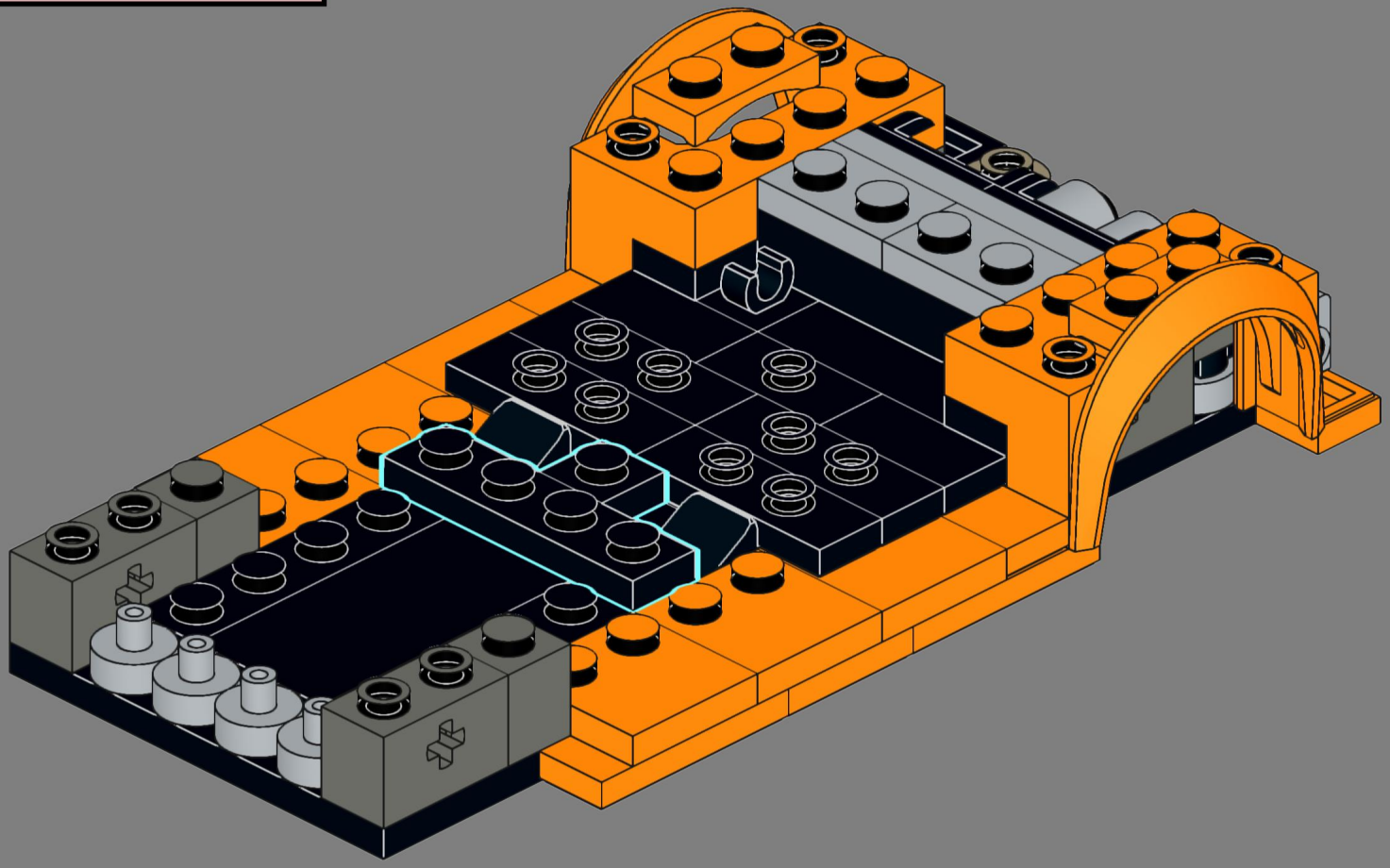

# 22




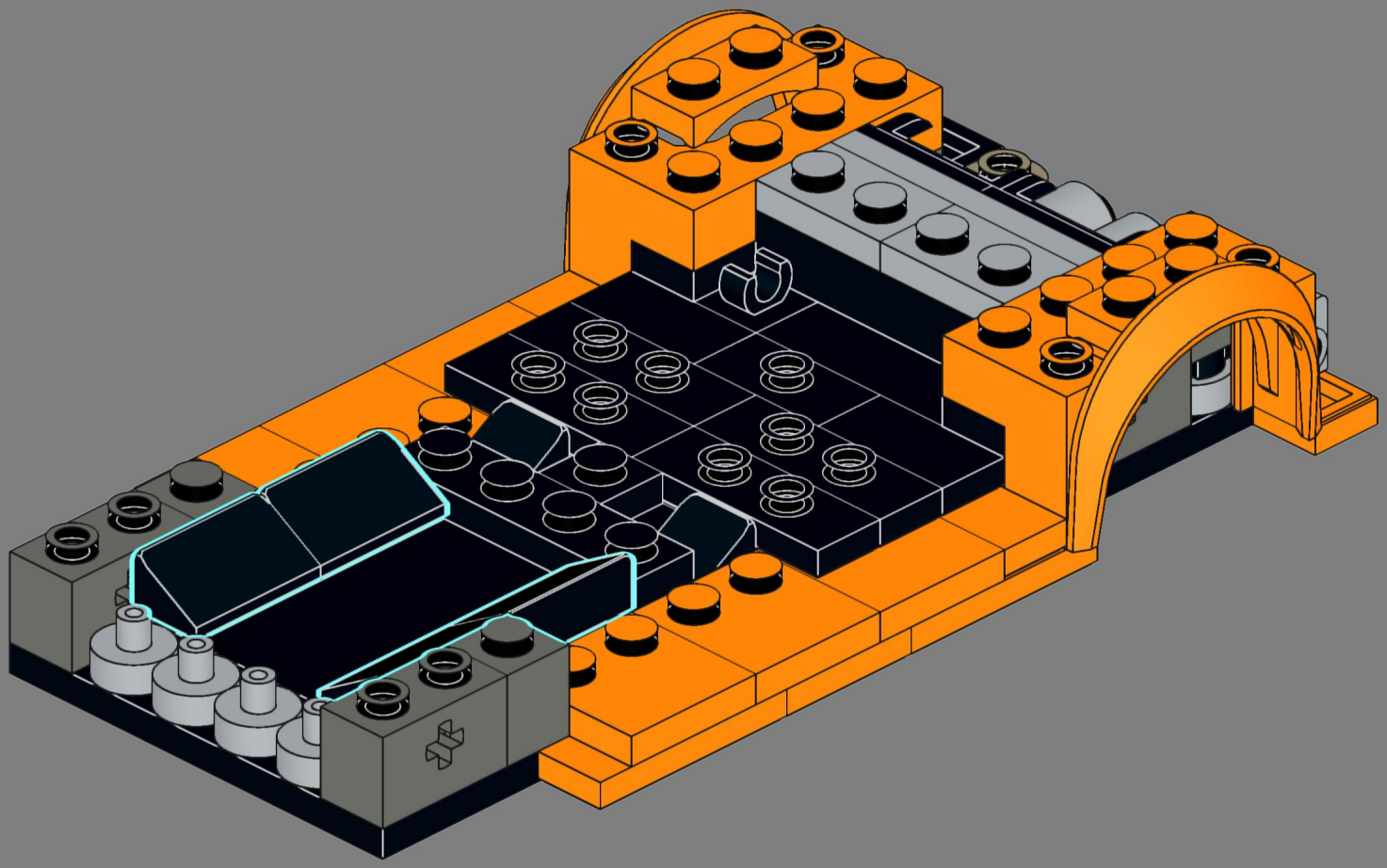

# 23

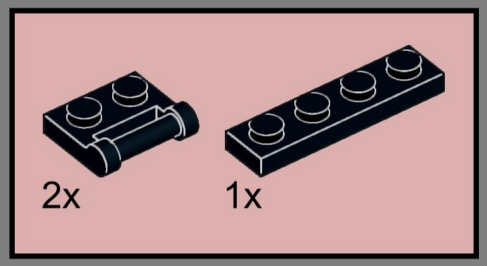


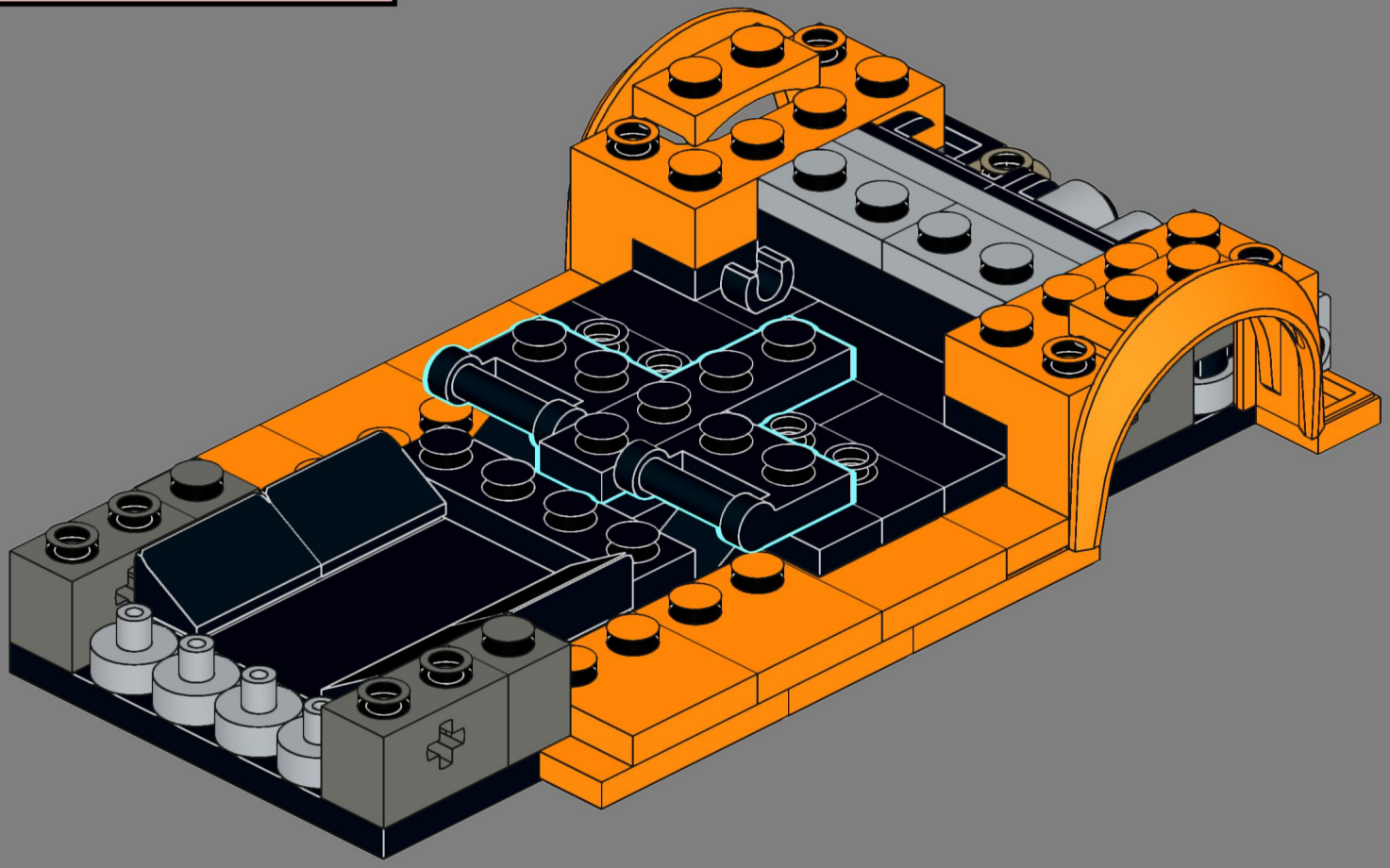

# 24

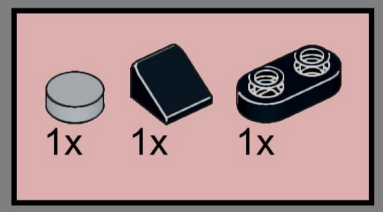


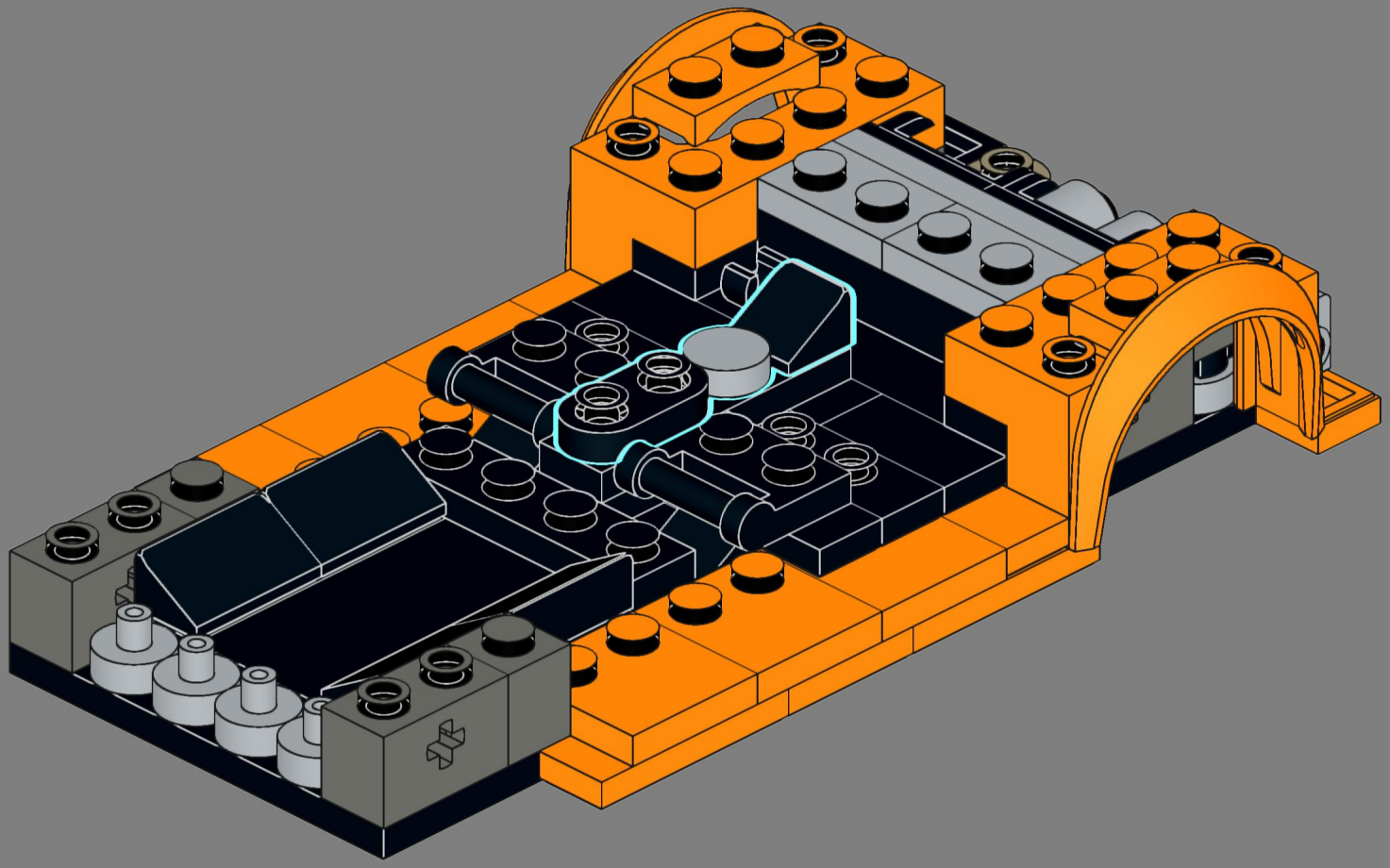

# 25

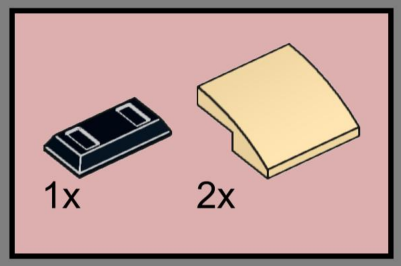


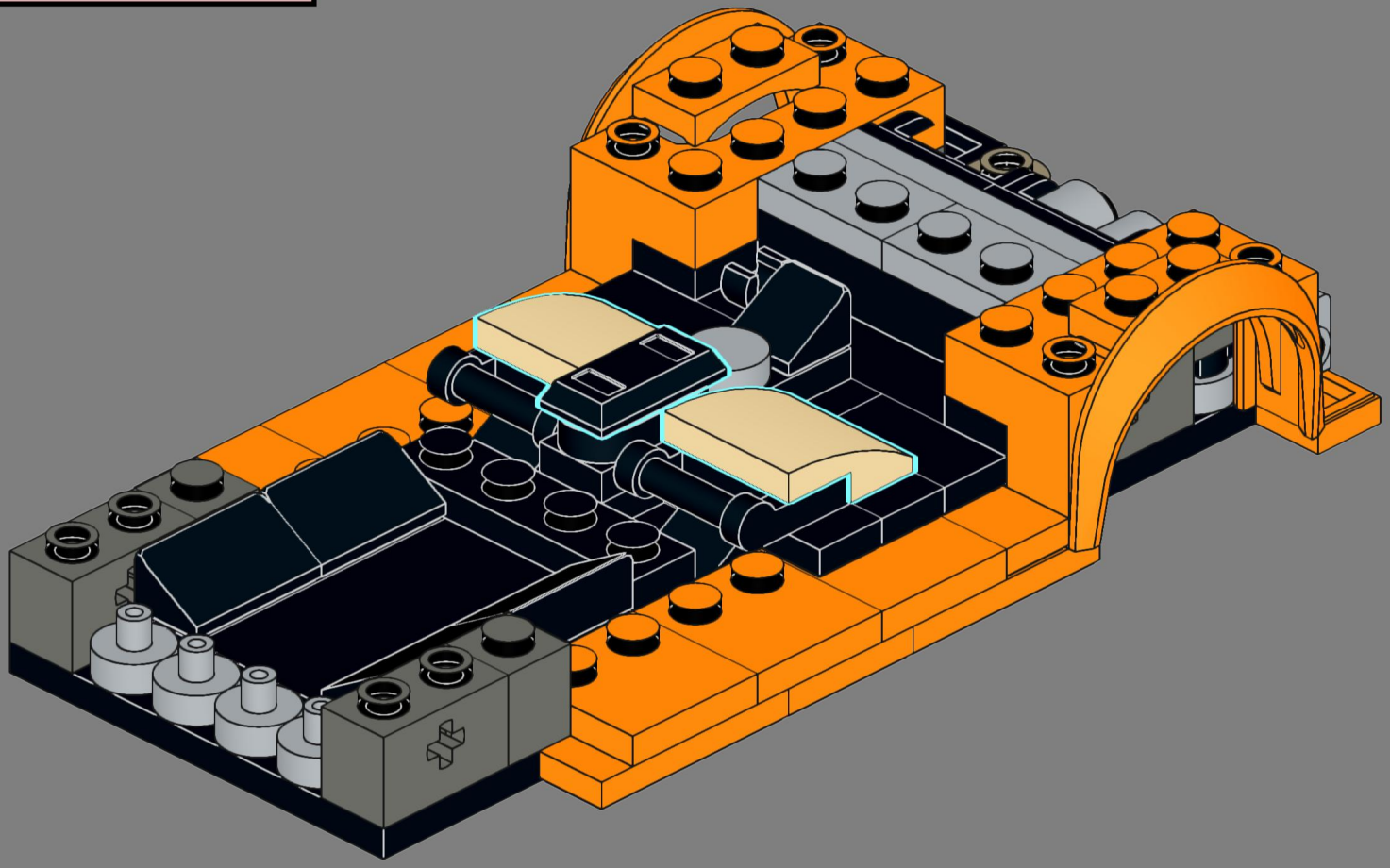

# 26

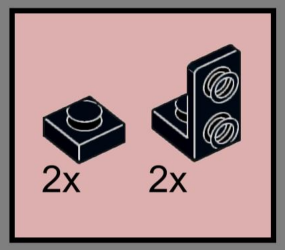


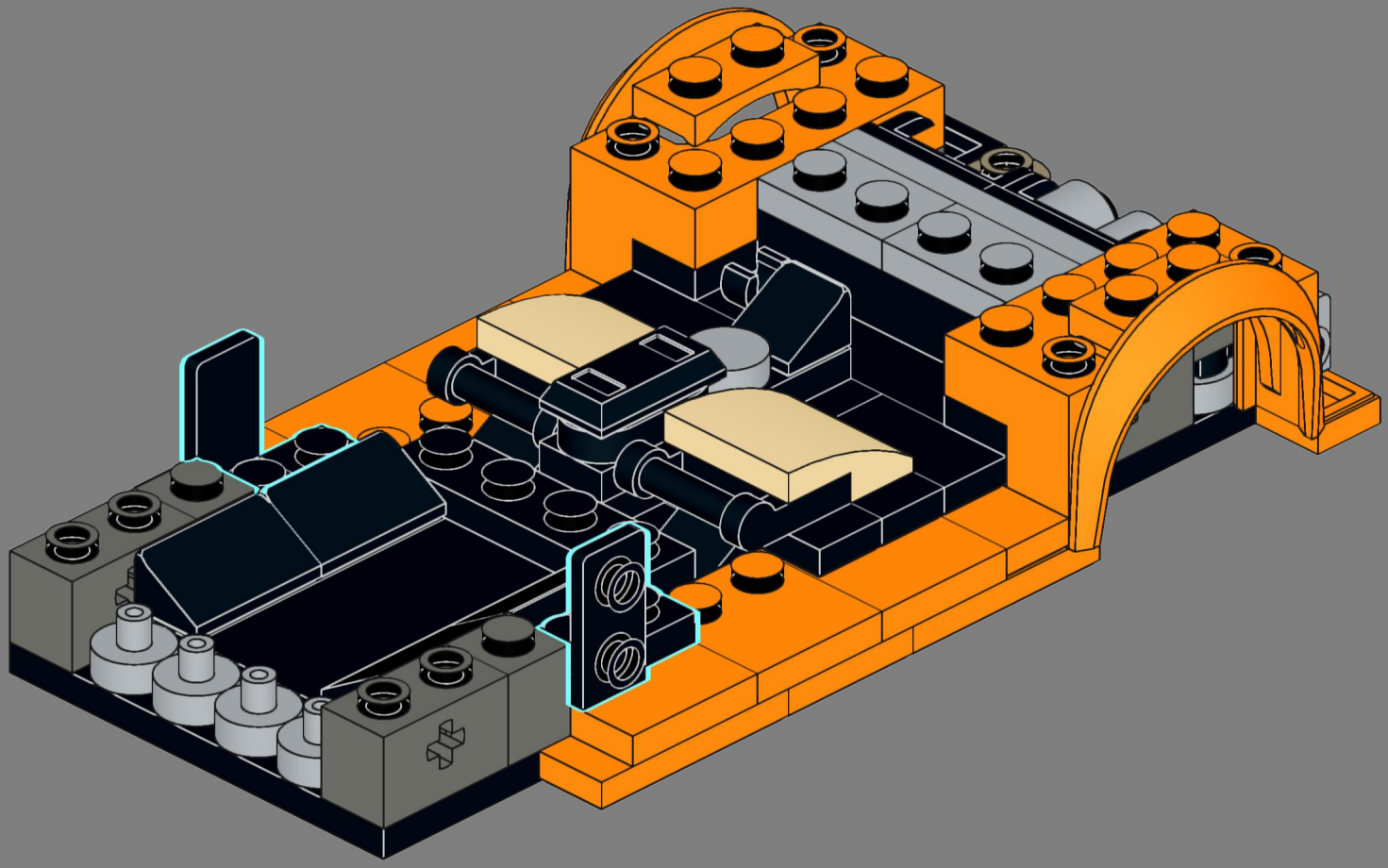

# 27

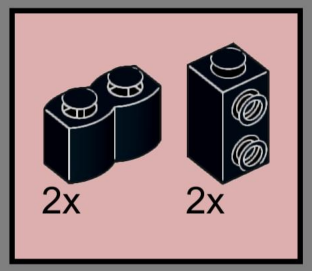


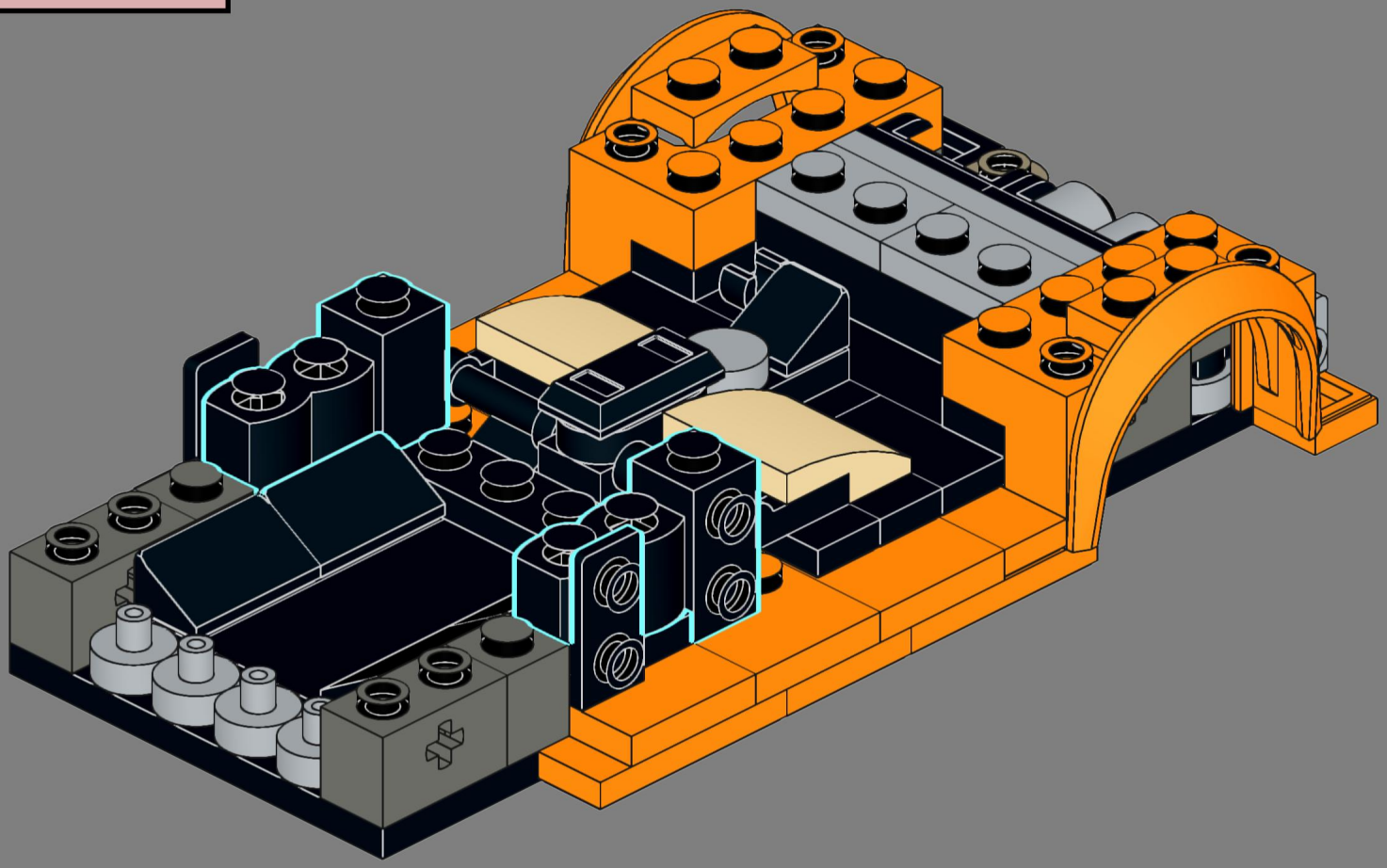

# 28

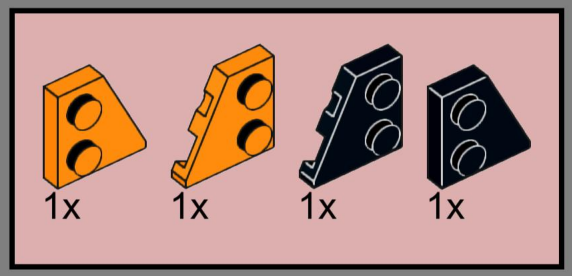


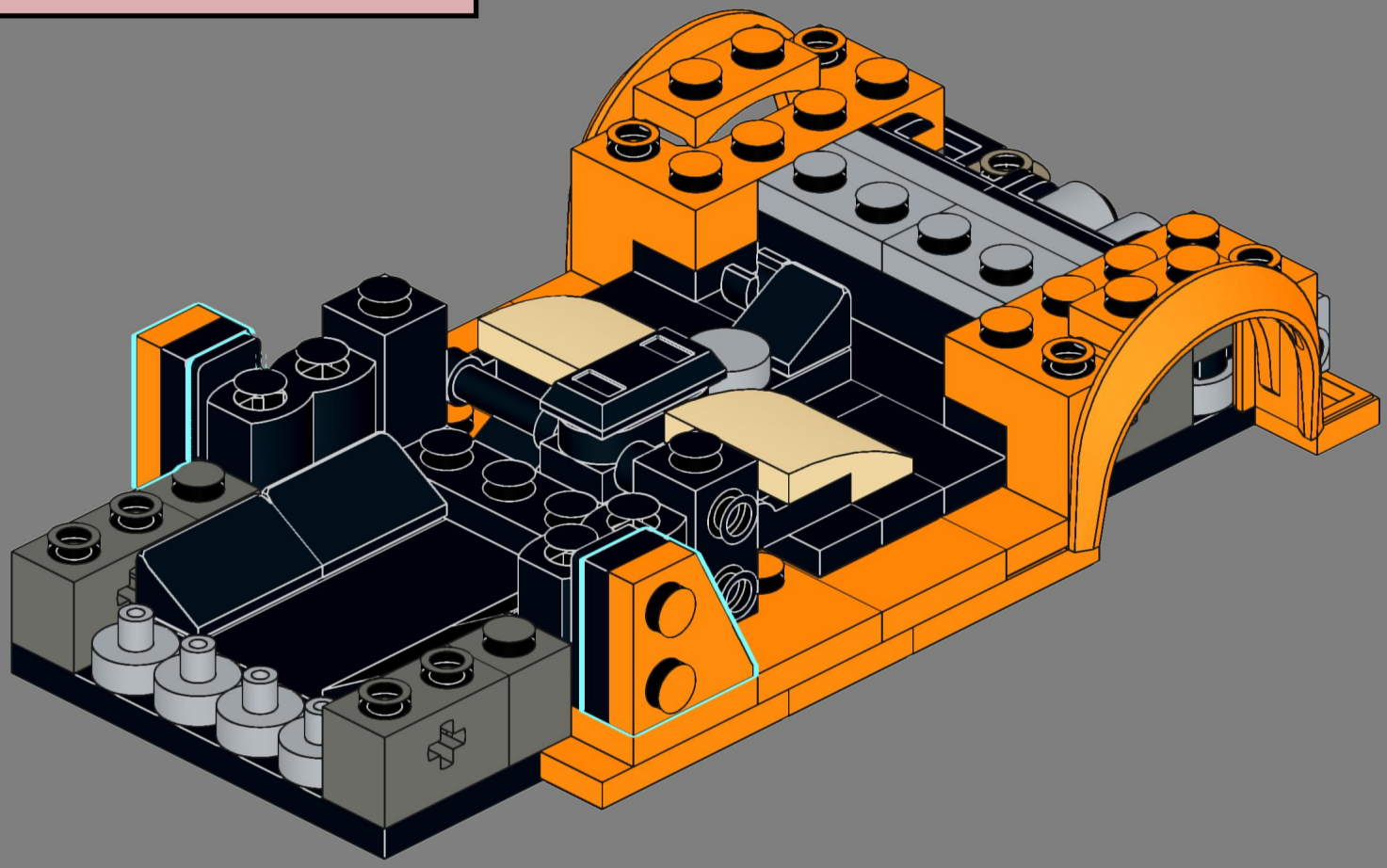

# 29

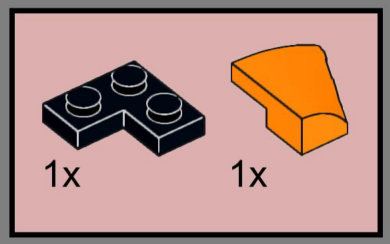


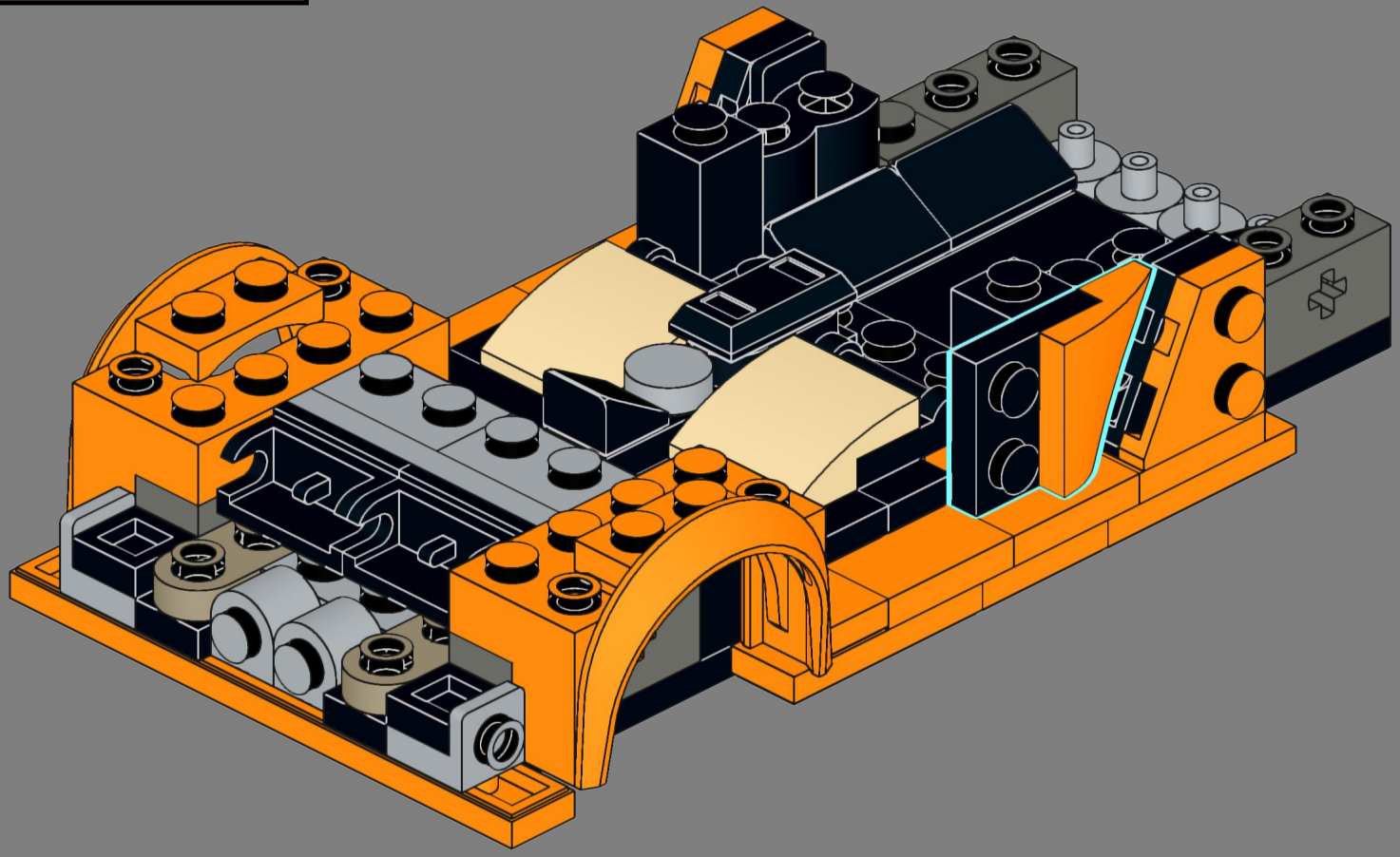

# 30

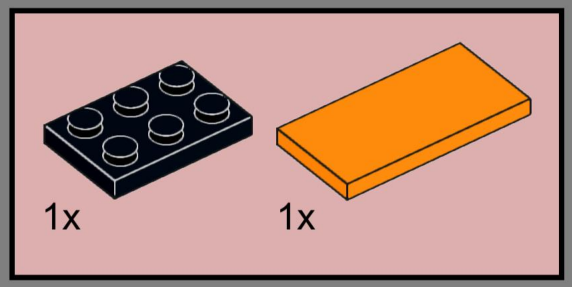


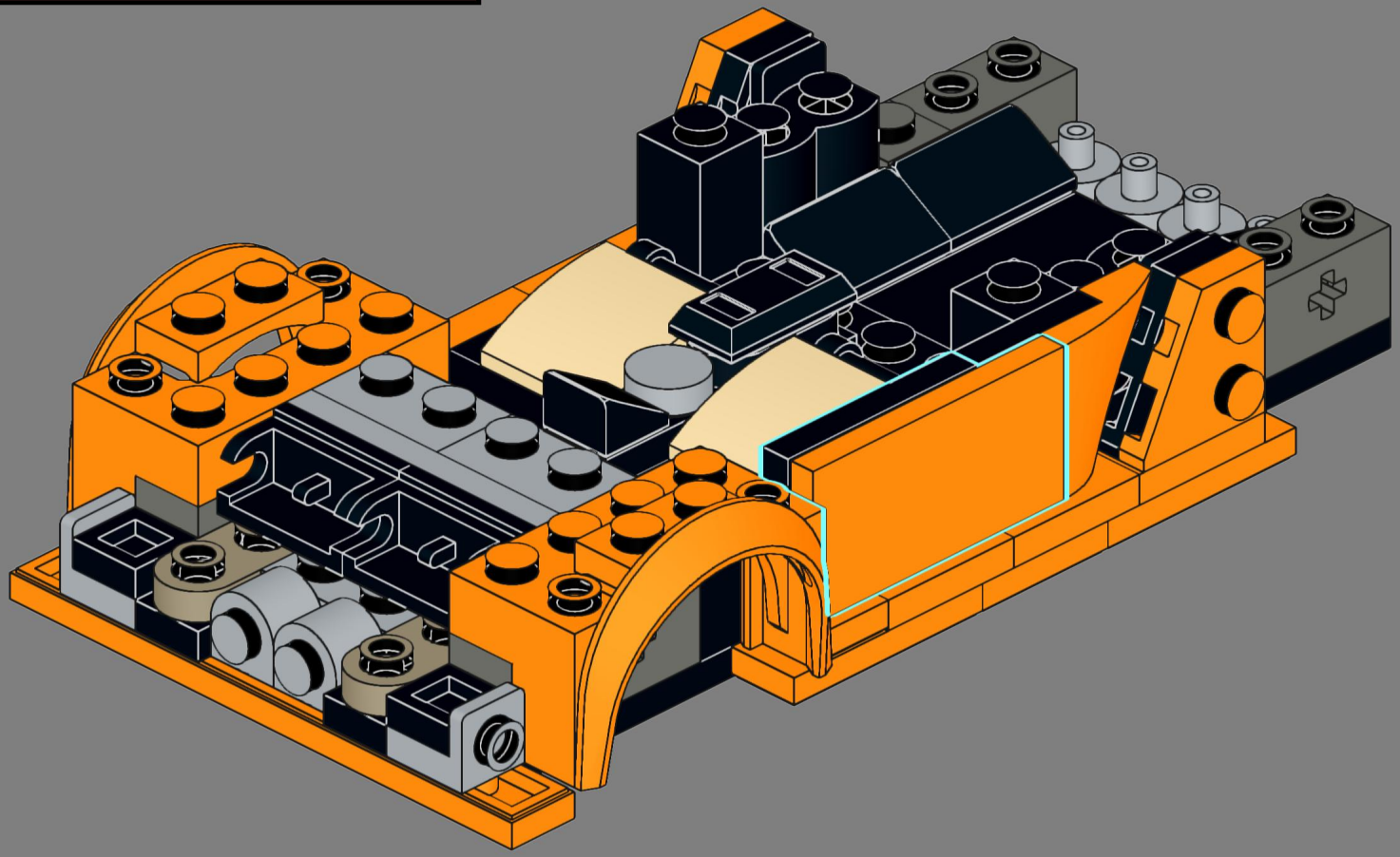

# 31

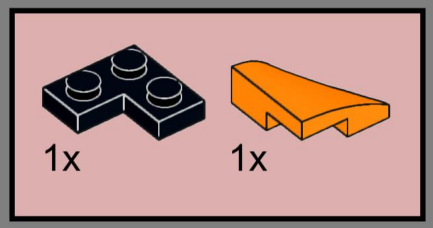


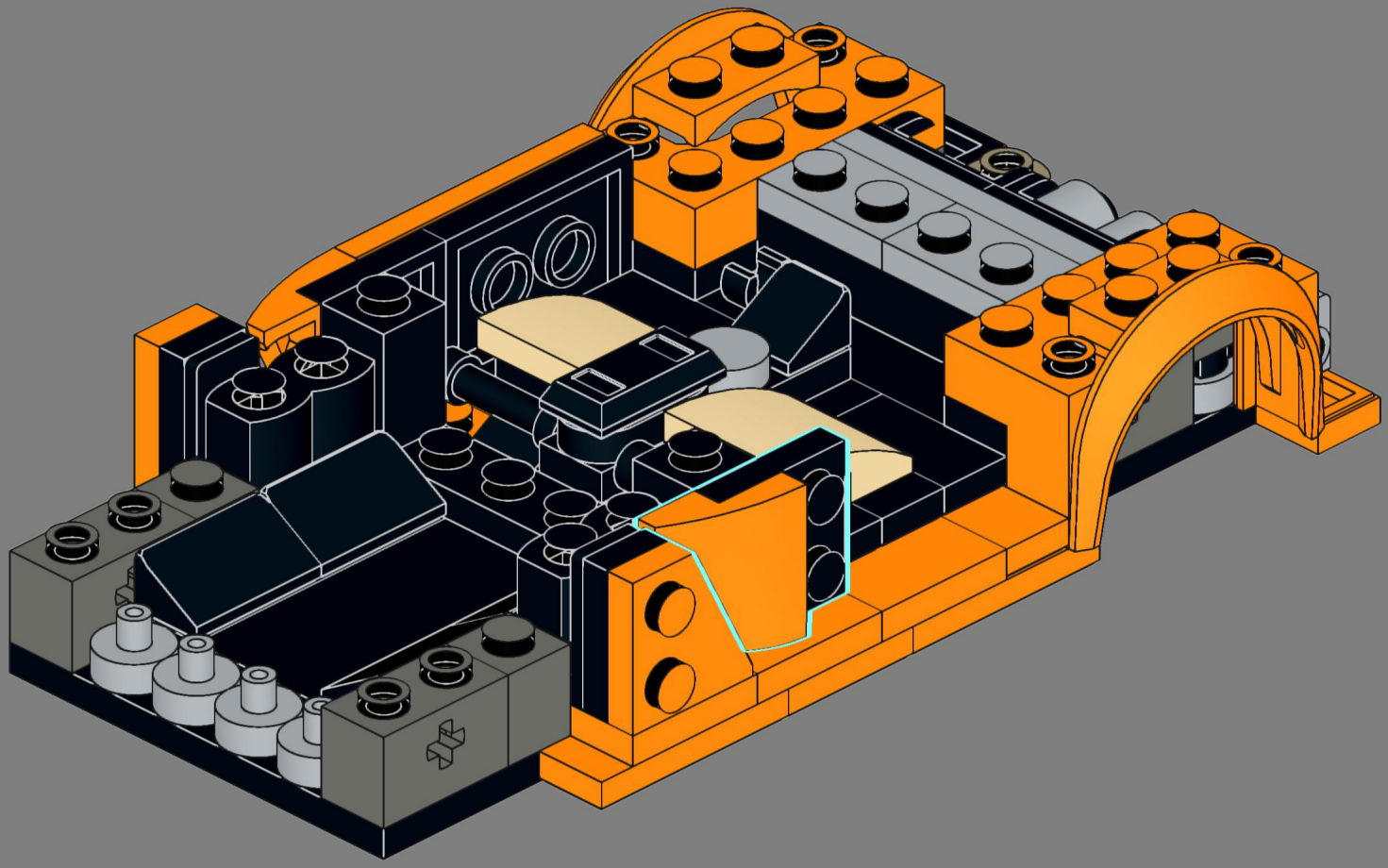

# 32

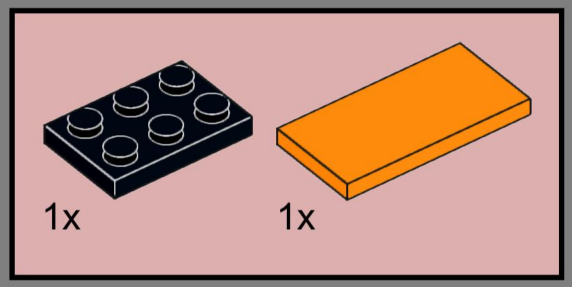


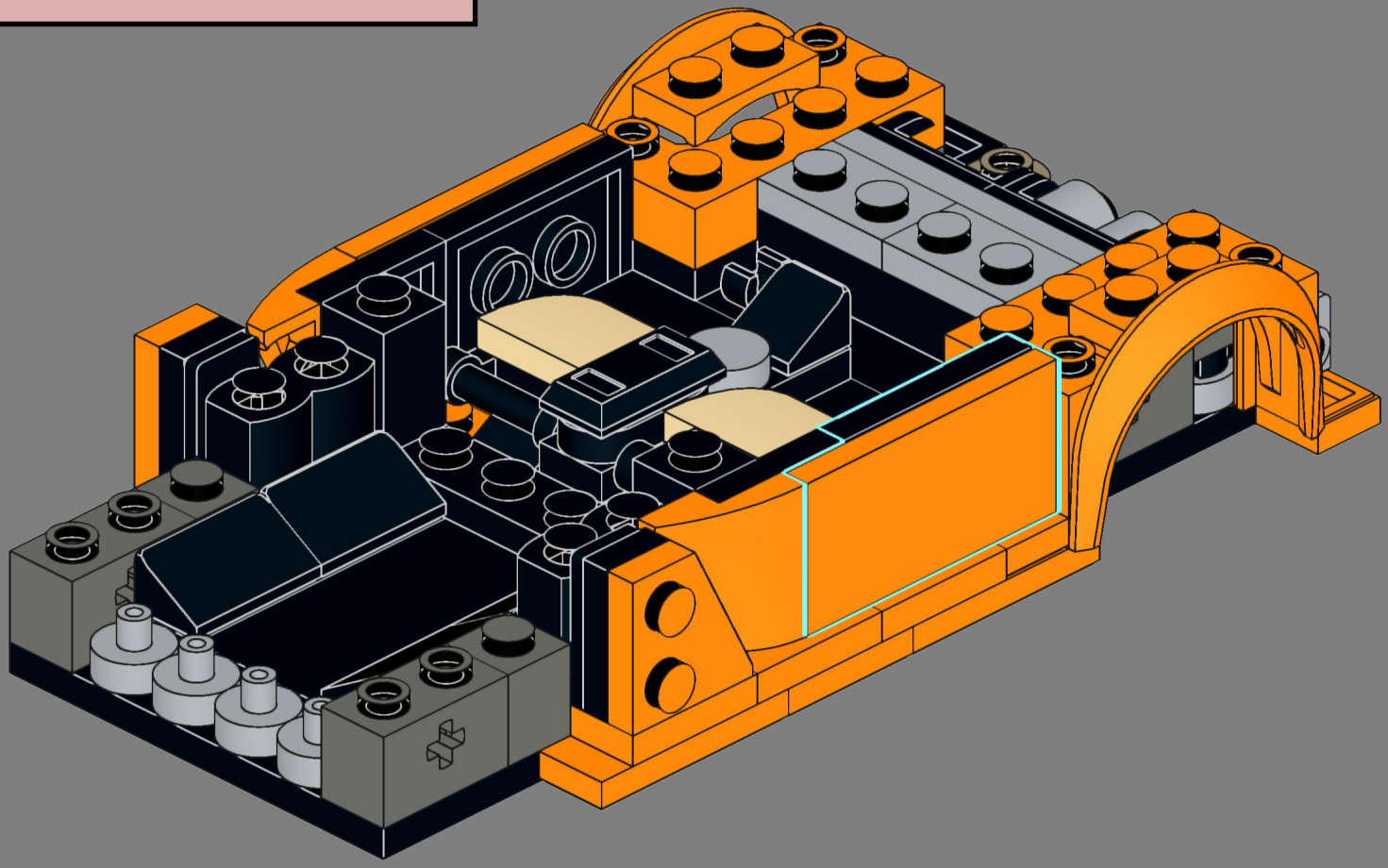

# 33

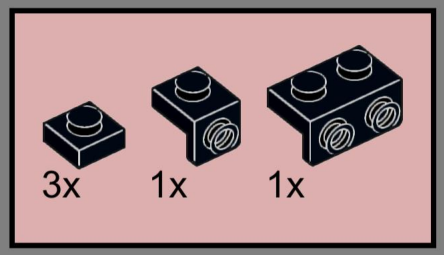


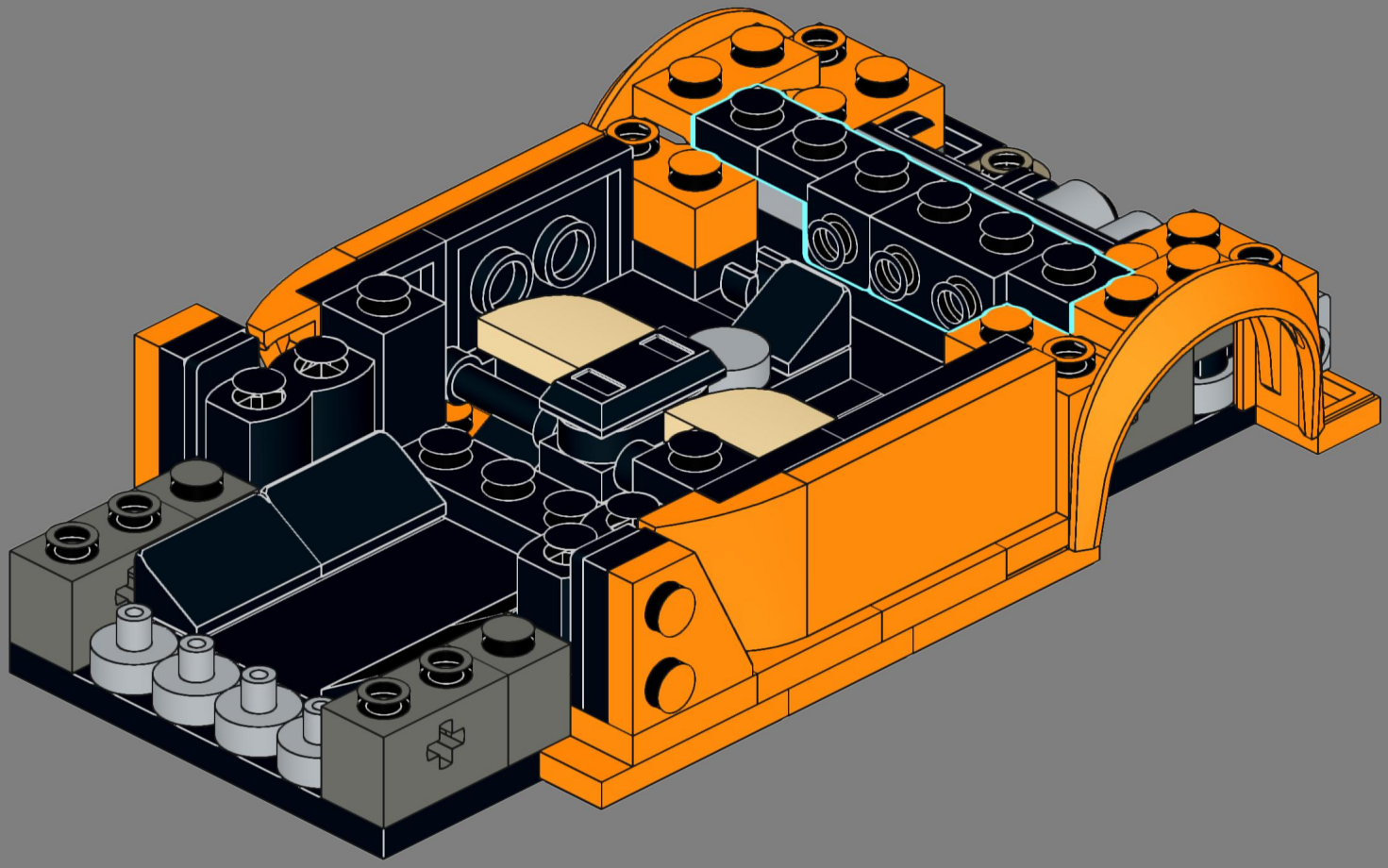

# 34

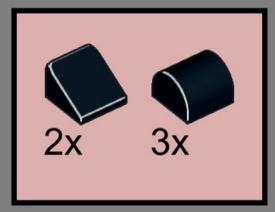


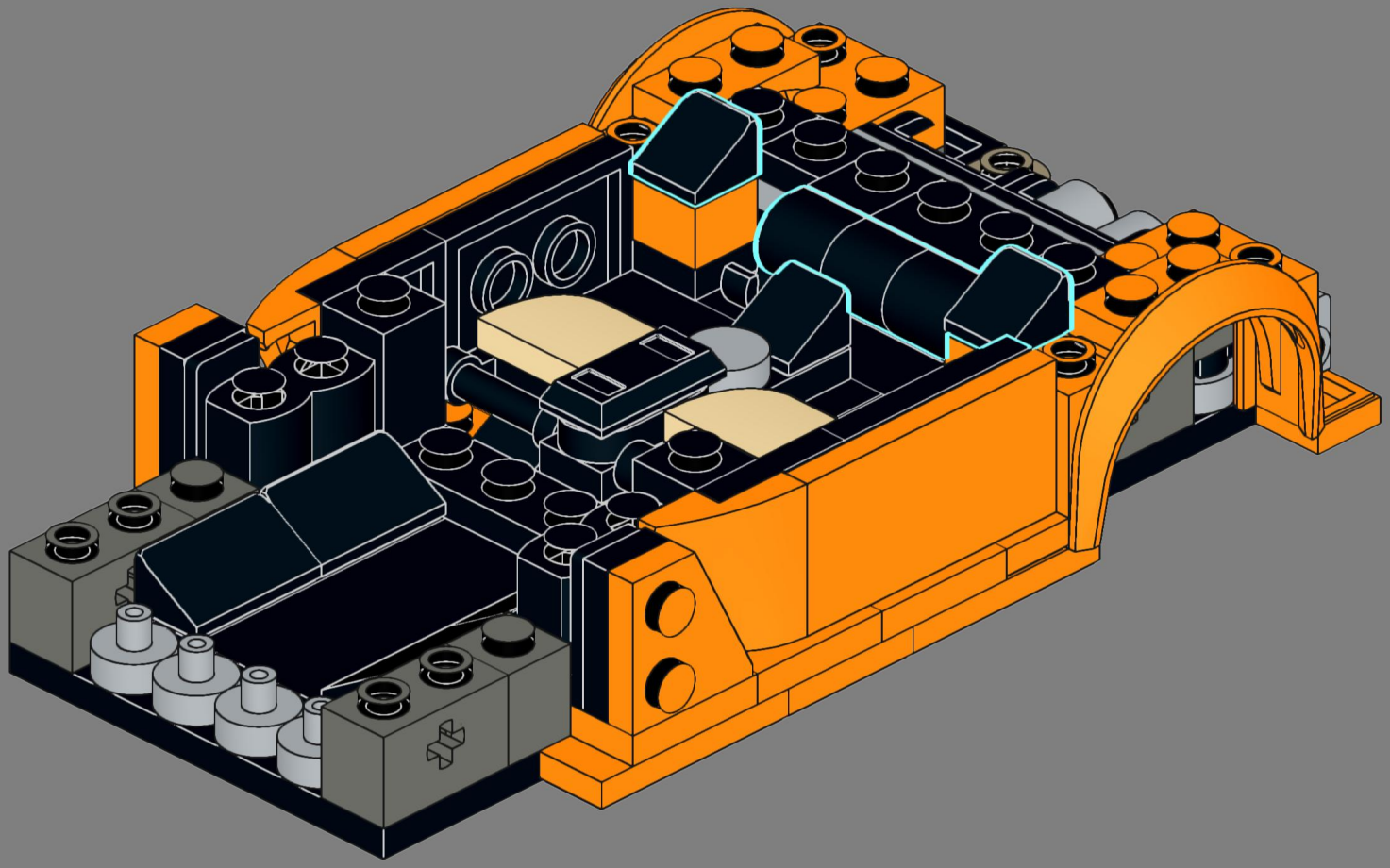

# 35

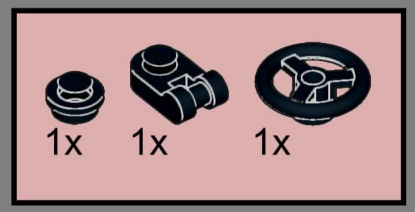


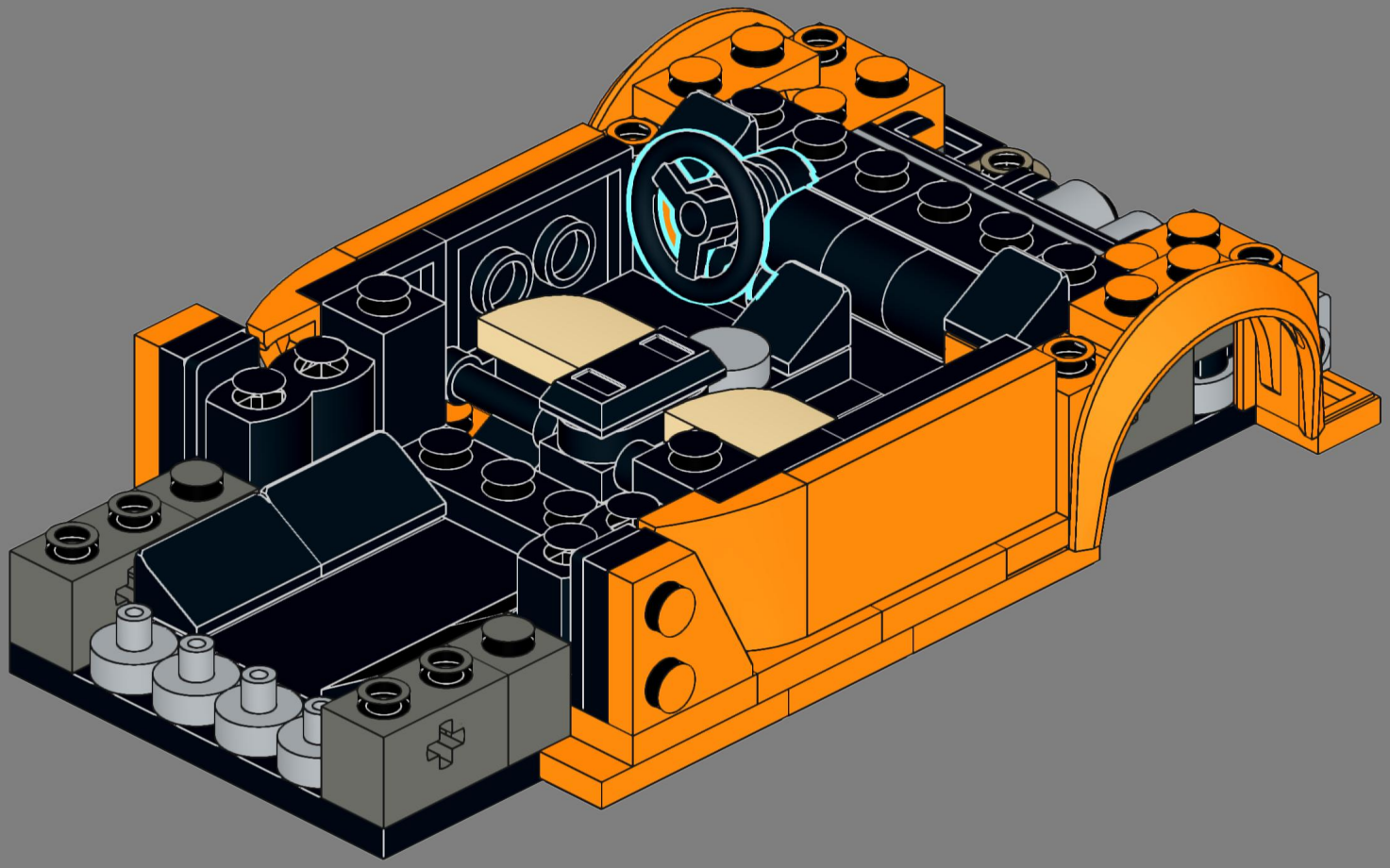

# 36

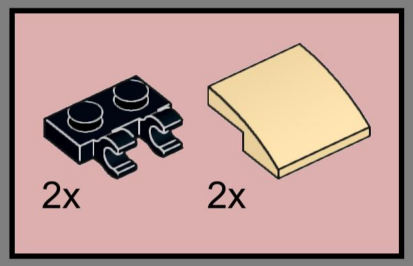


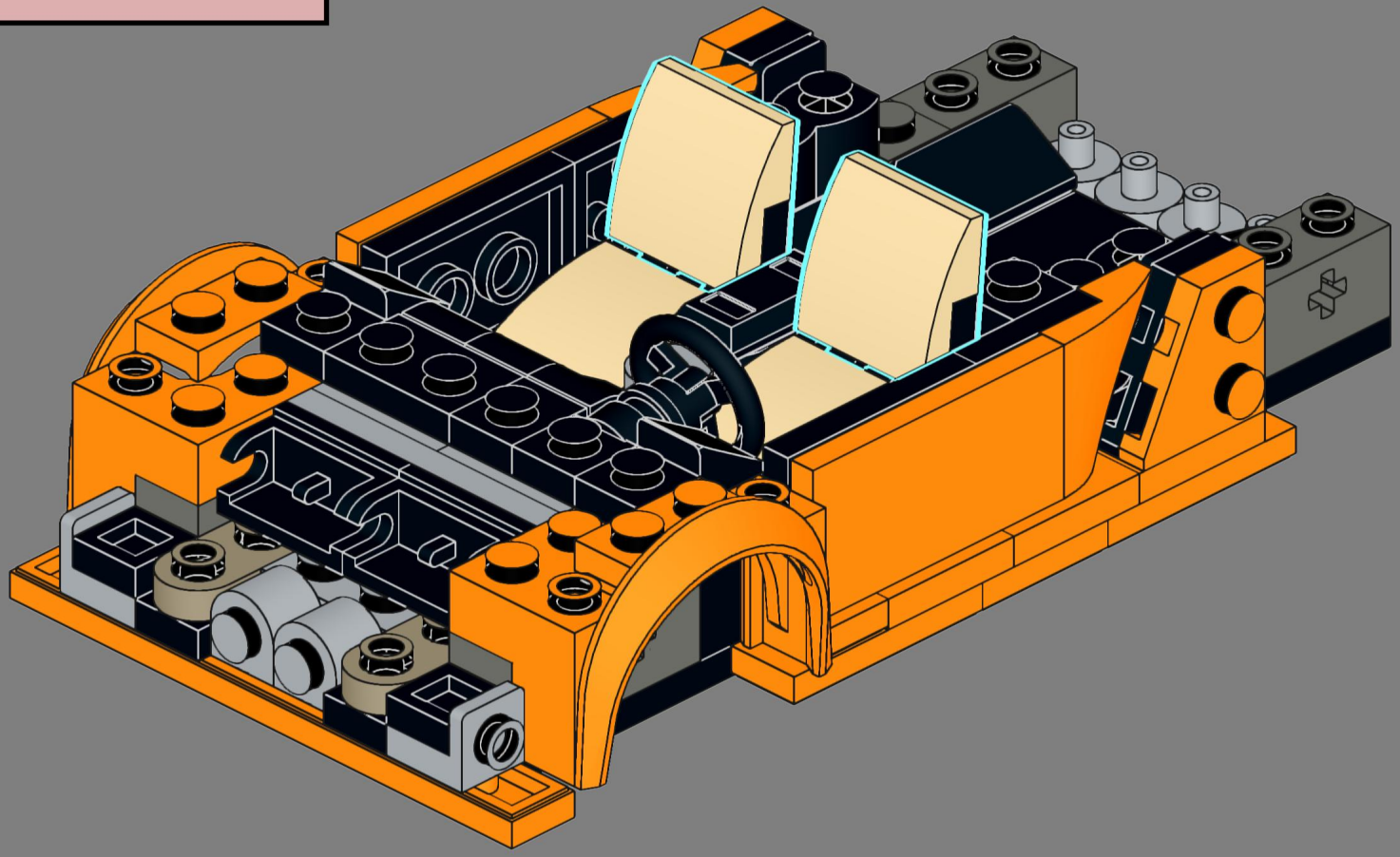

# 37

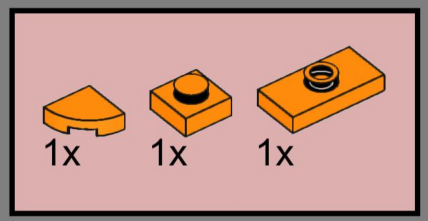


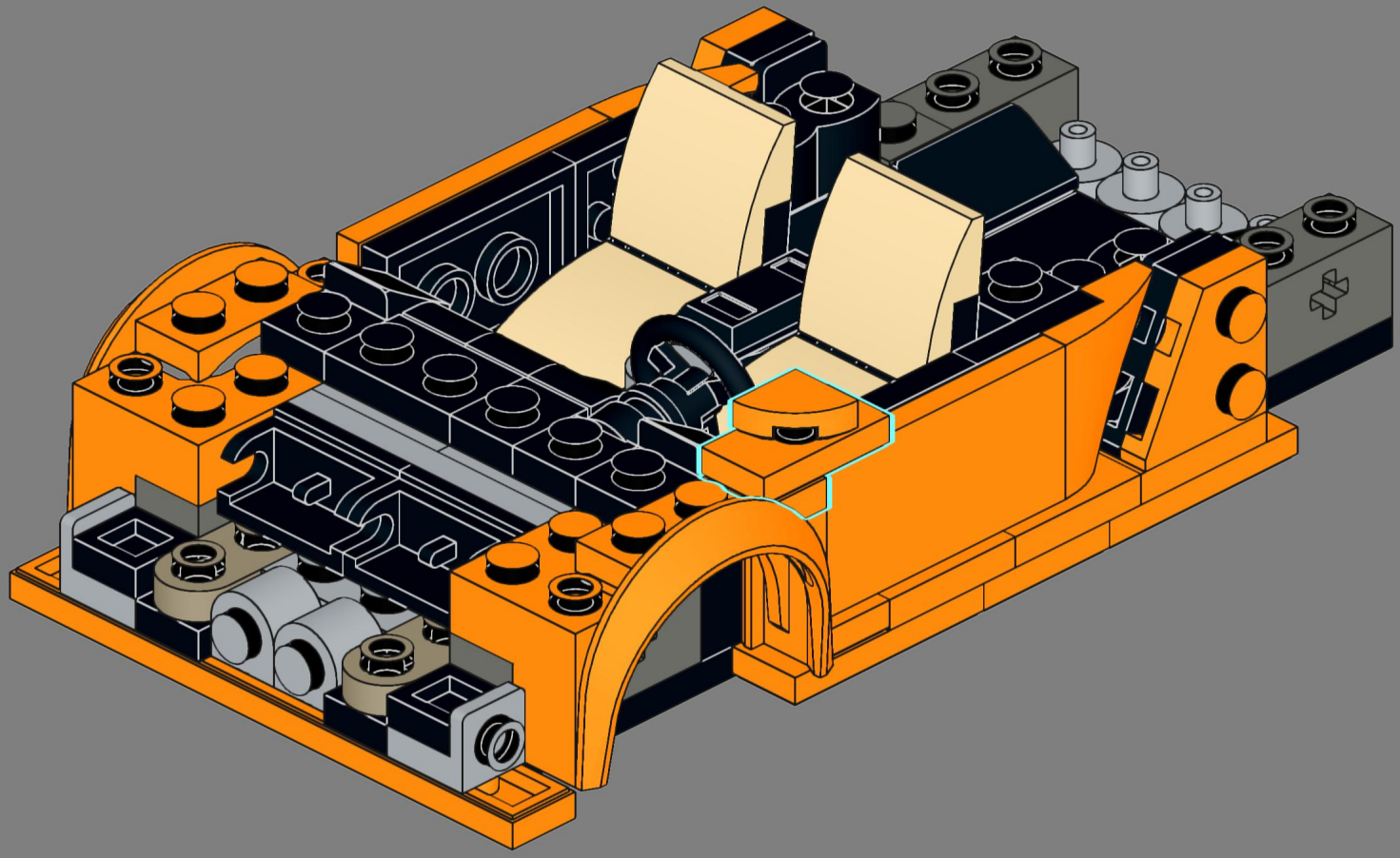

# 38

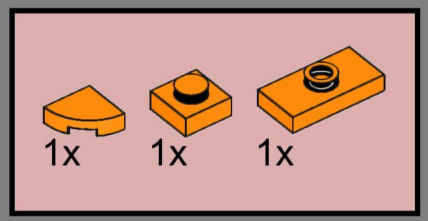


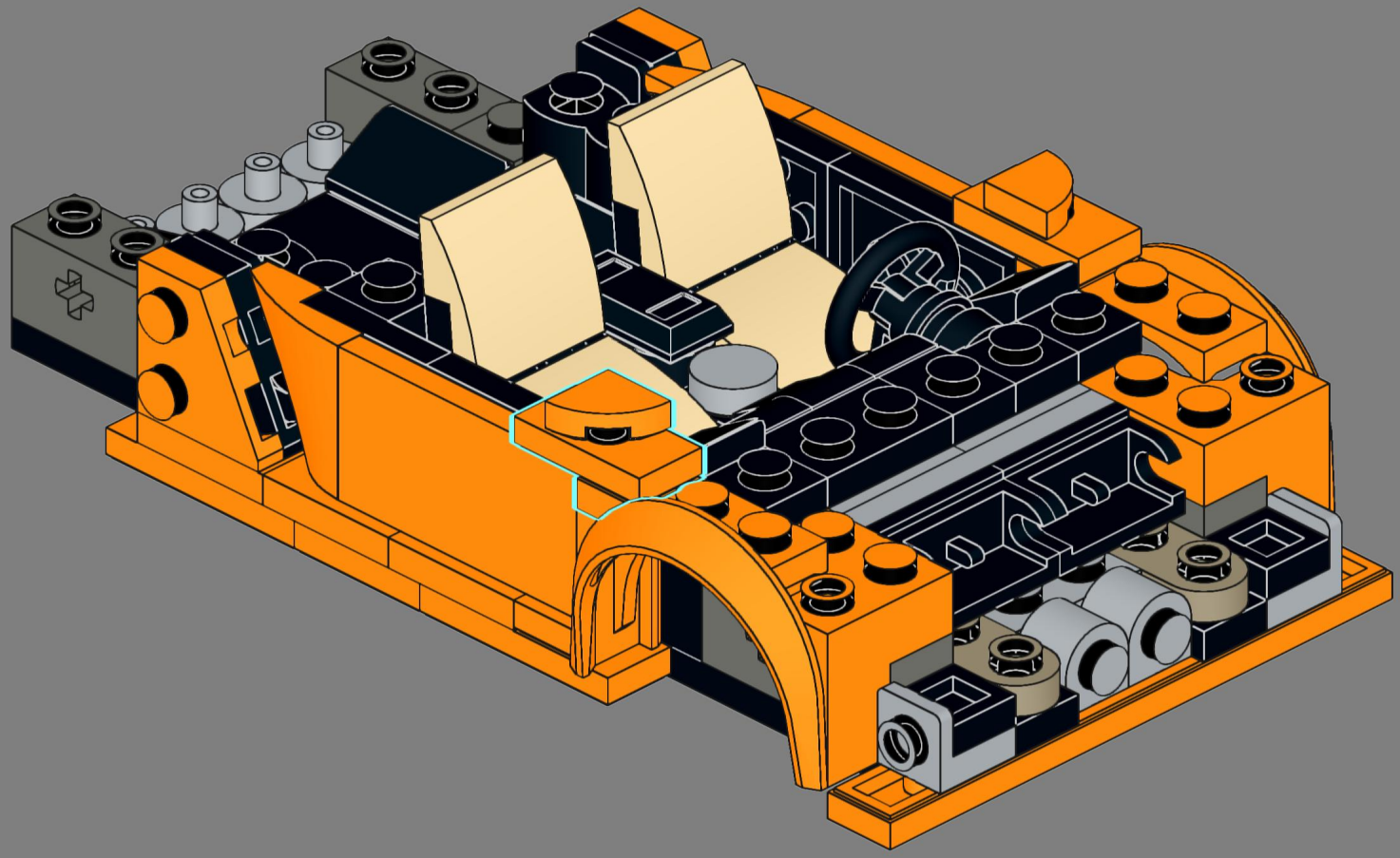

# 39

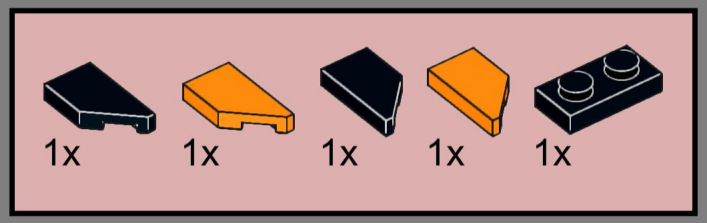


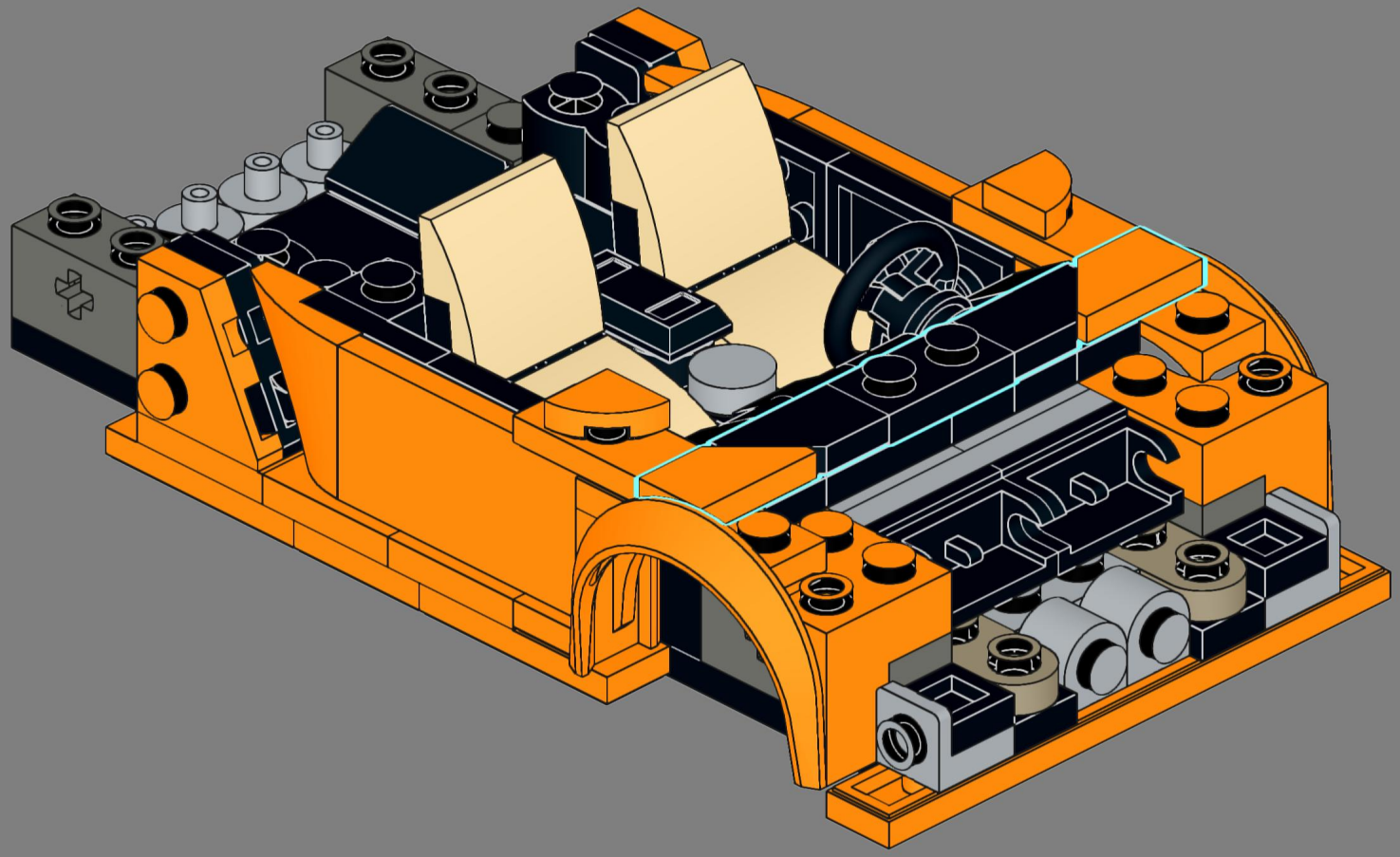

# 40

2x

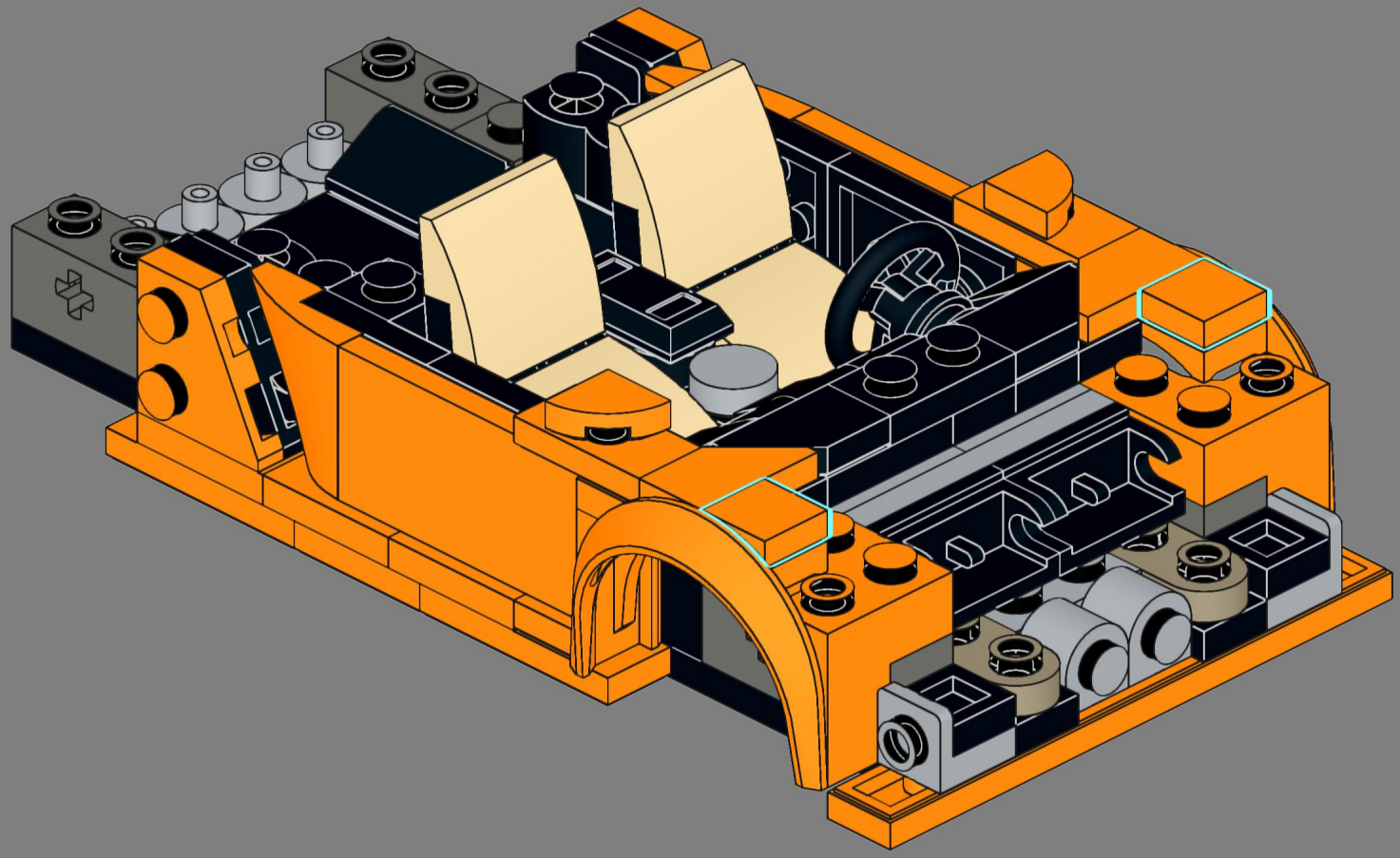

# 41

2x

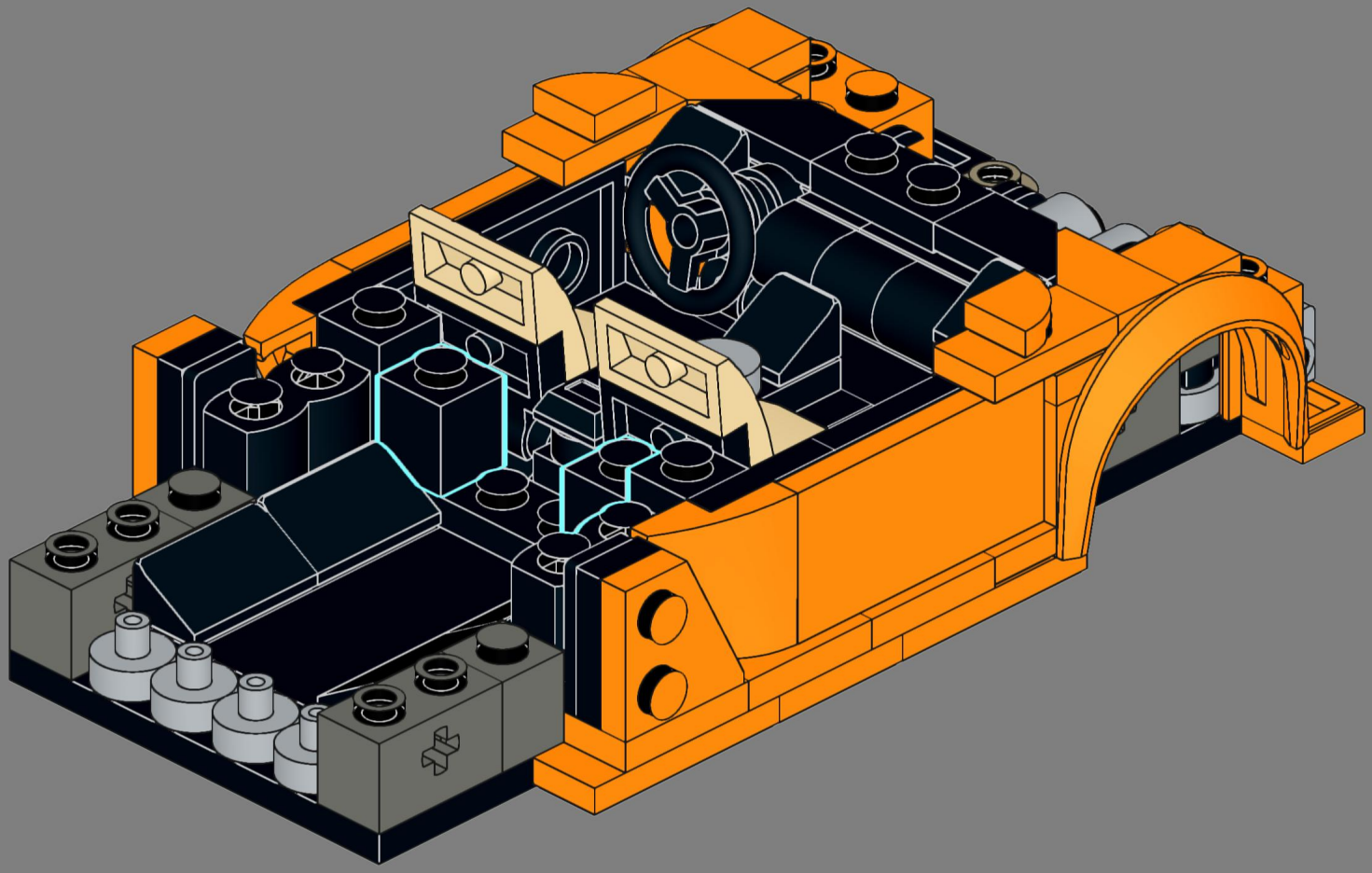

# 42

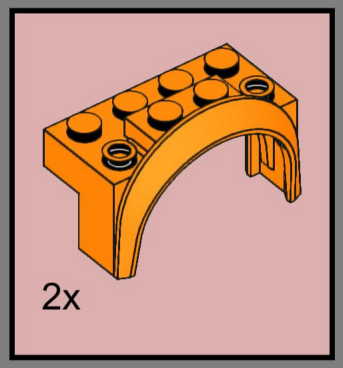


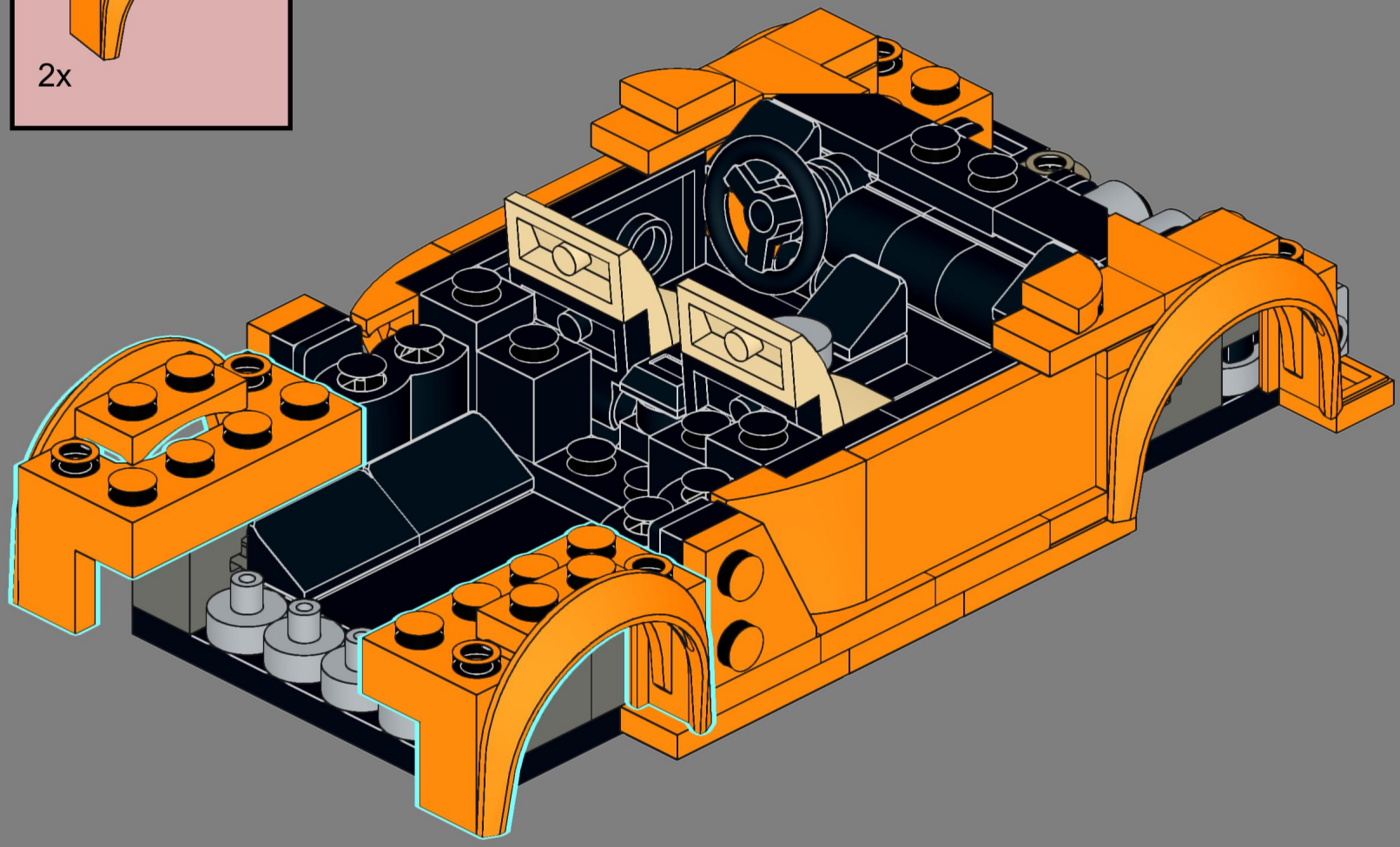

# 43

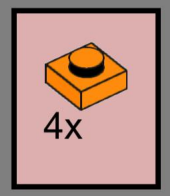


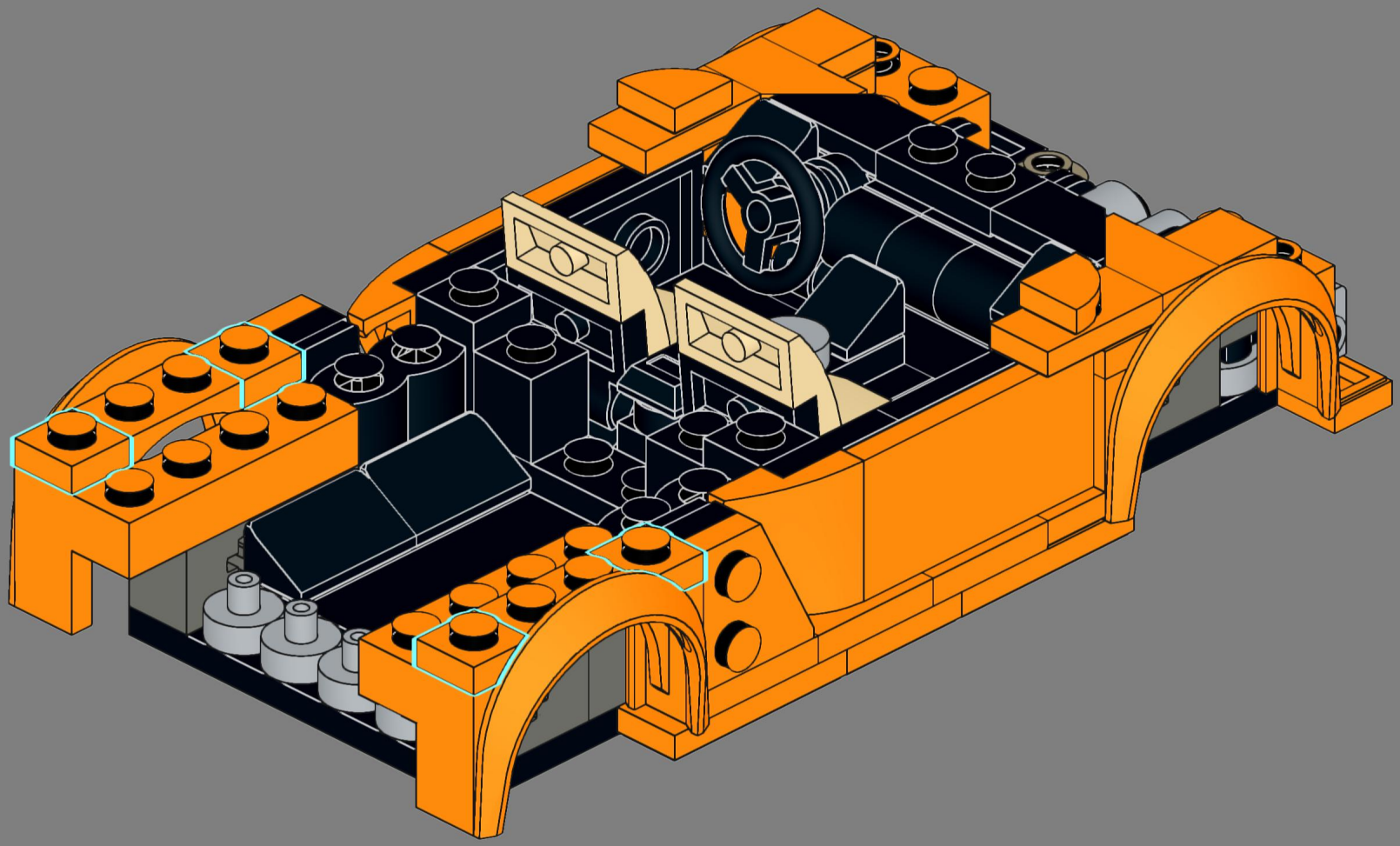

# 44

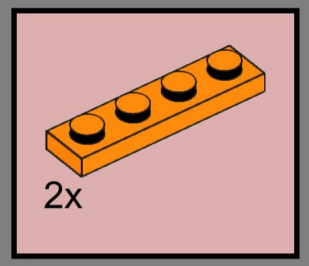


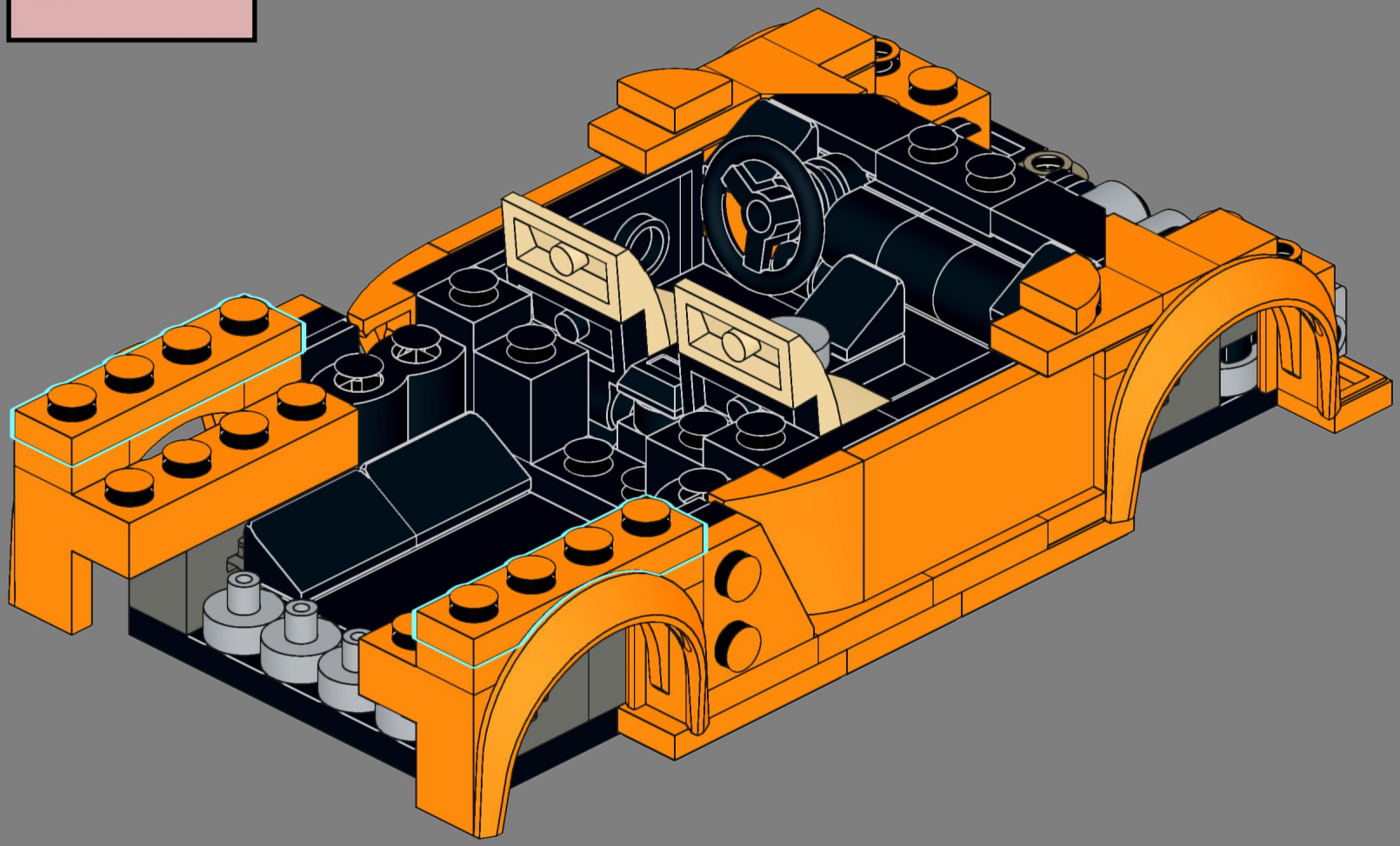

# 45

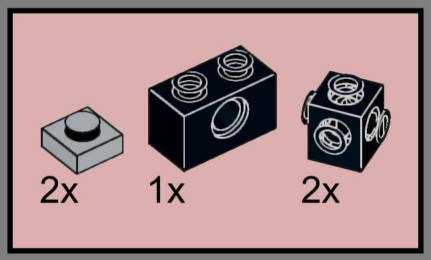


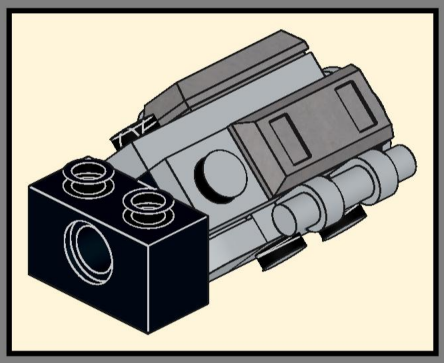

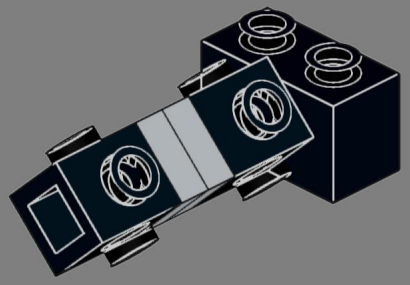

# 46

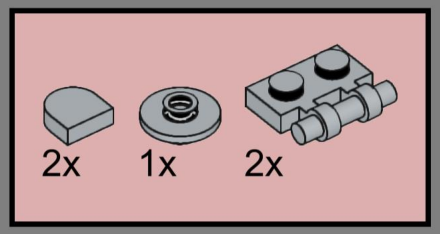


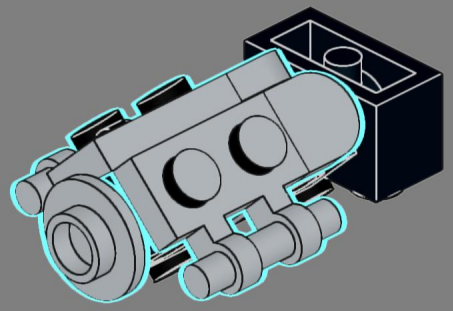

# 47

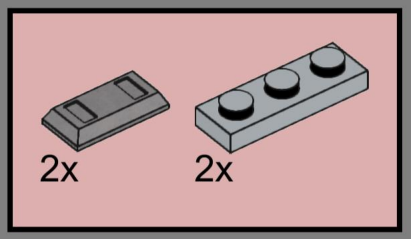


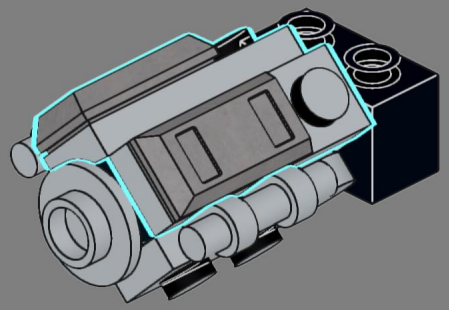

# 48

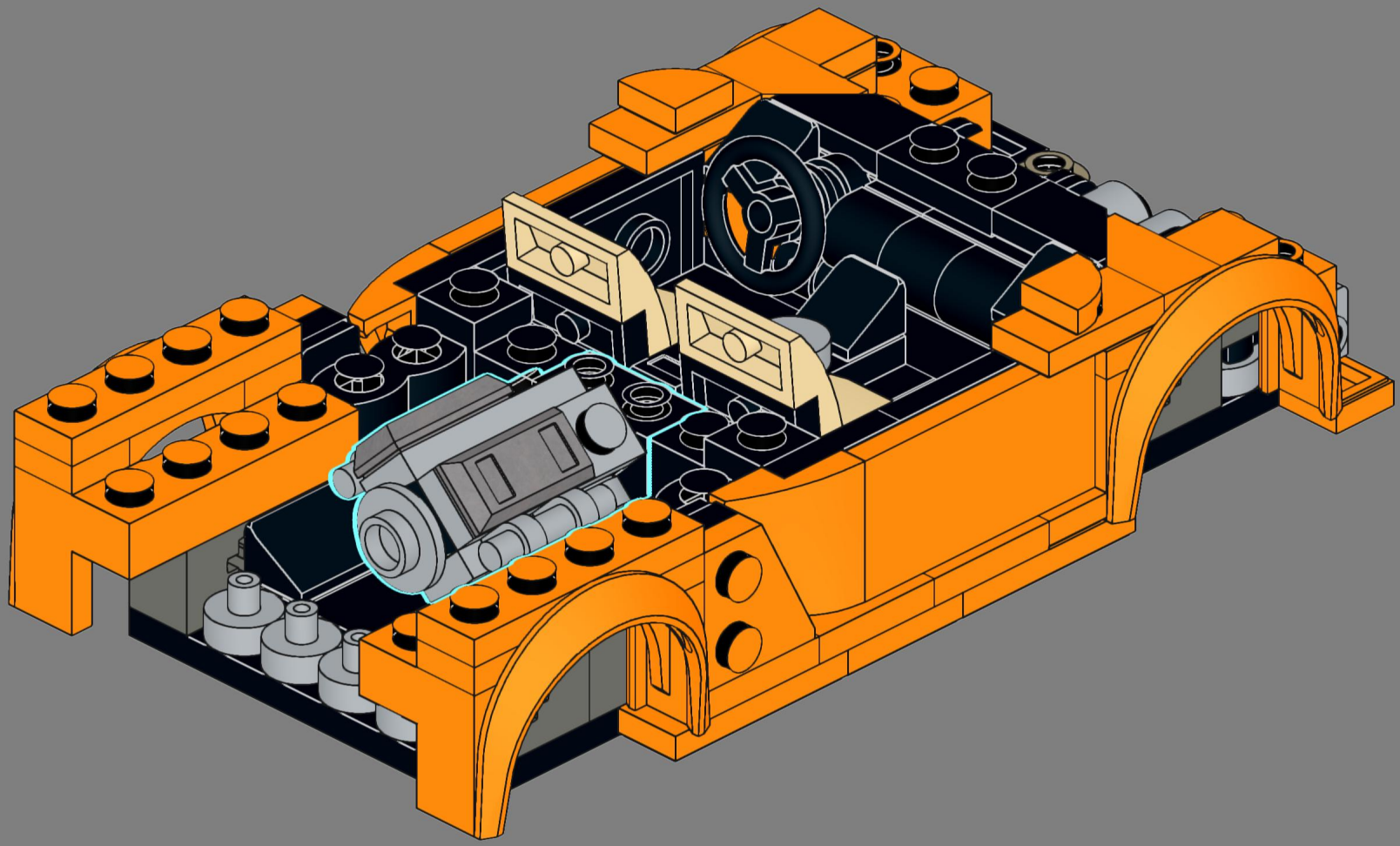

# 49

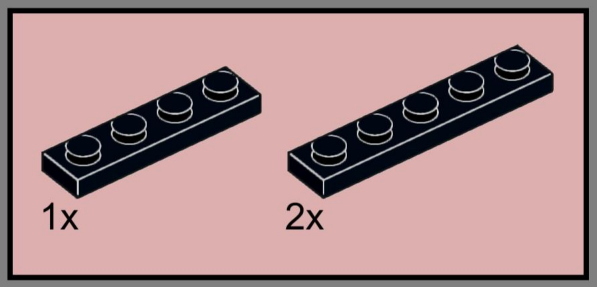


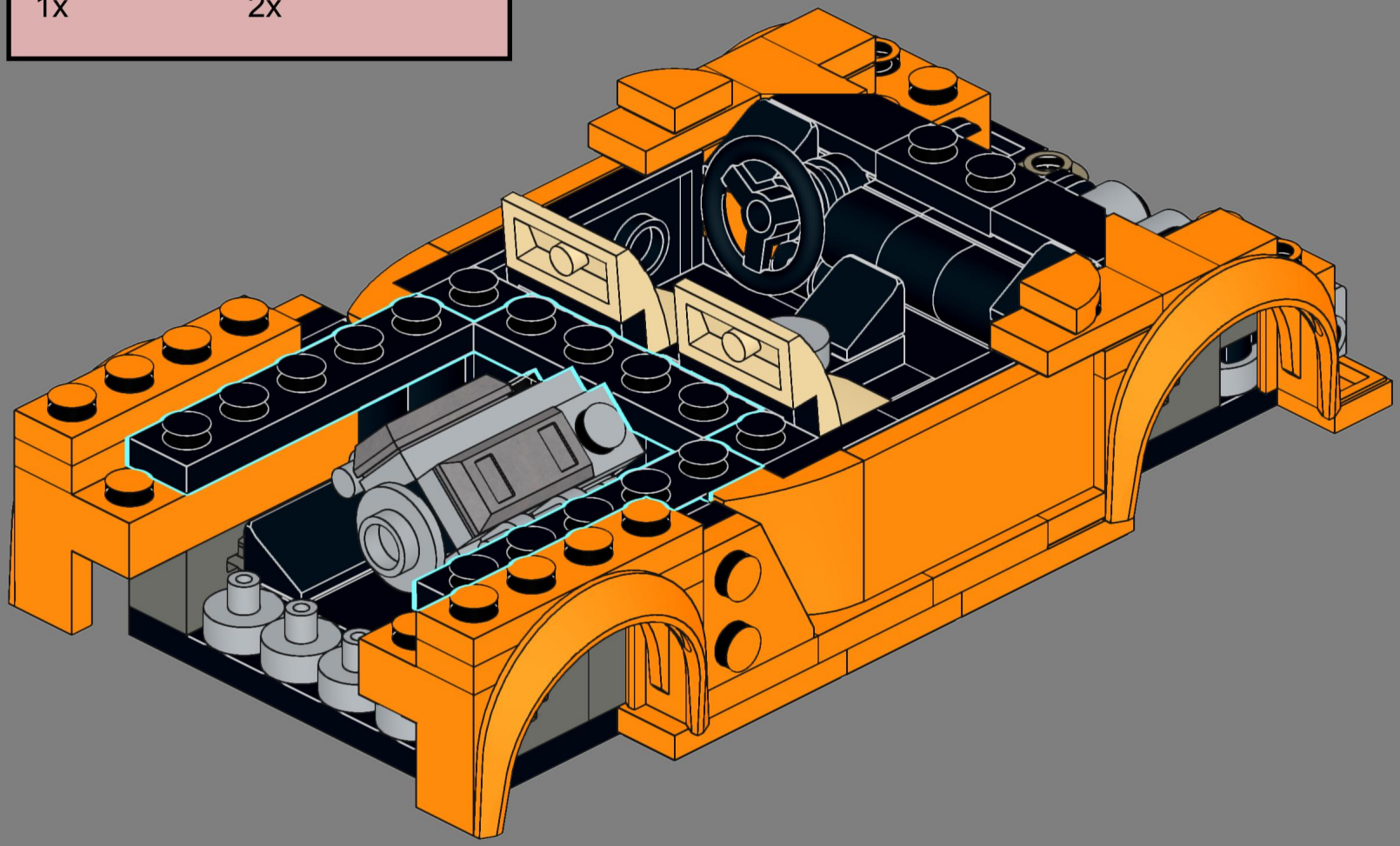

# 50

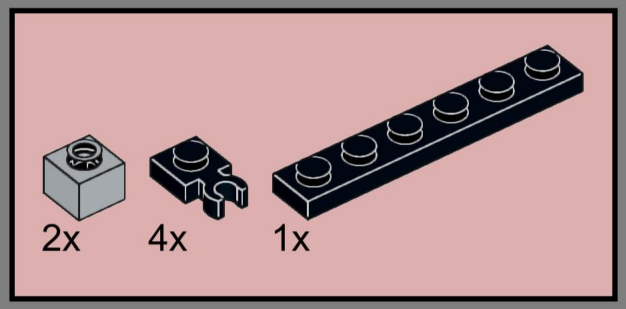


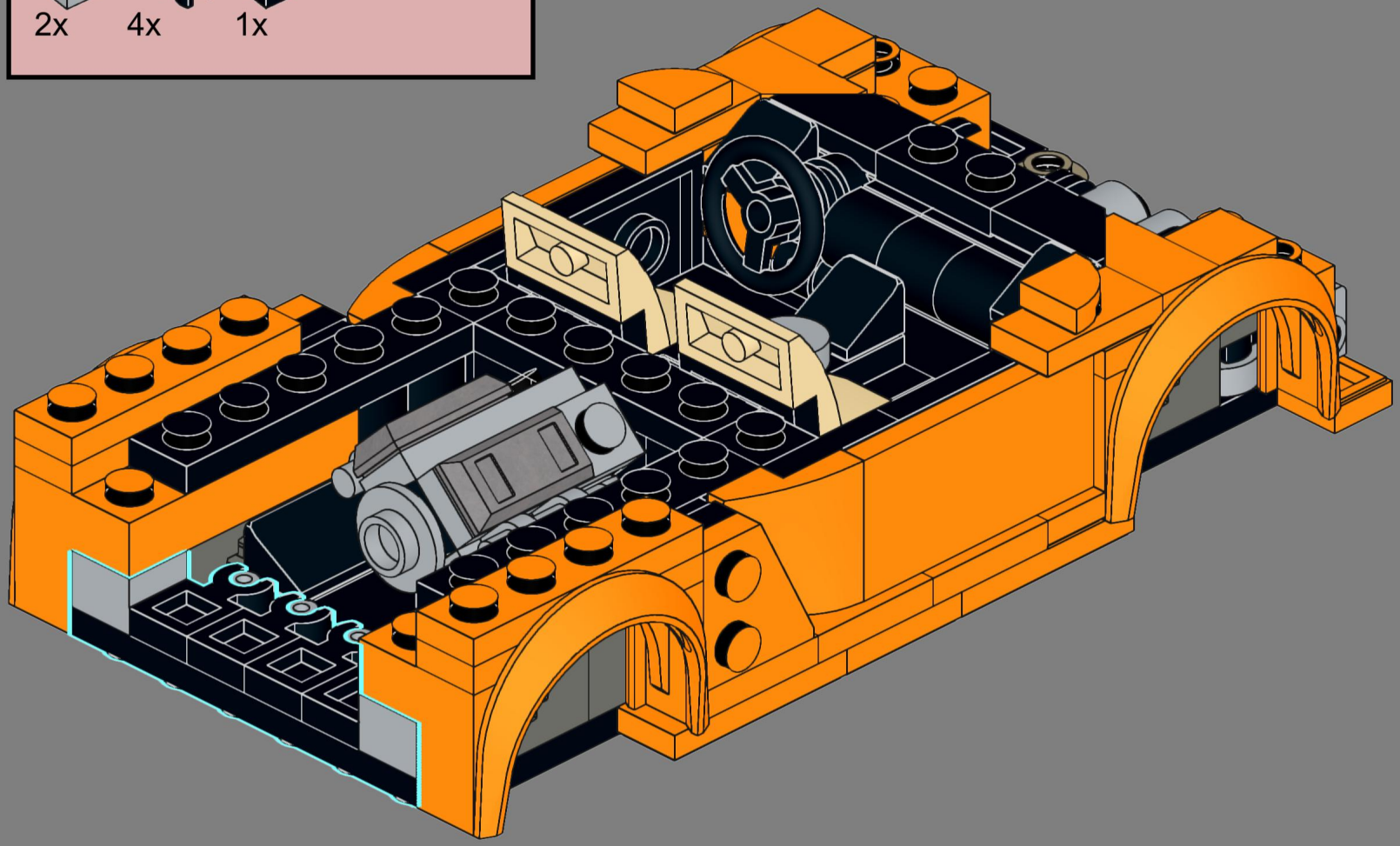

# 51

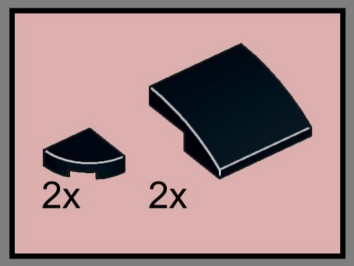


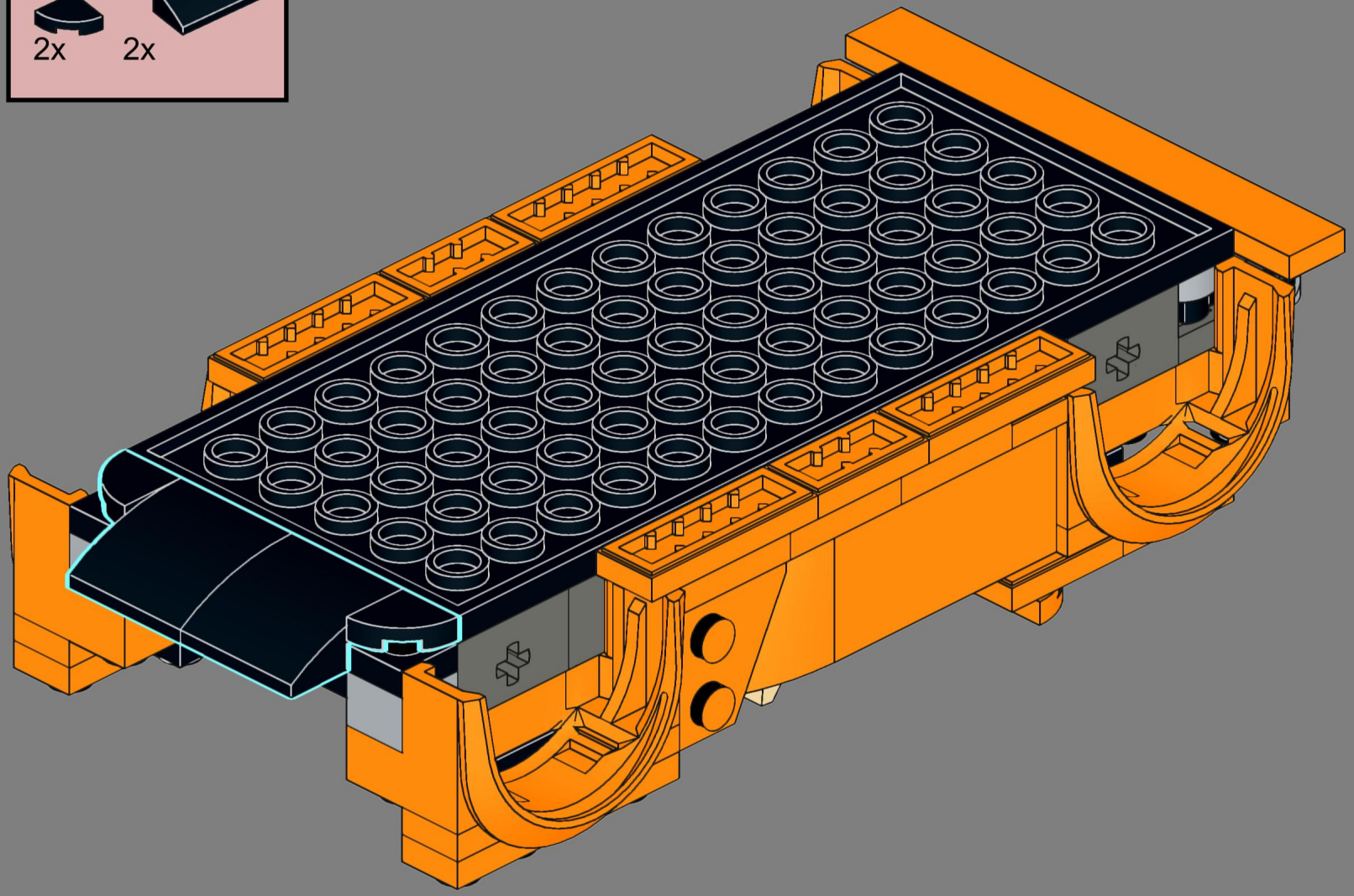

# 52

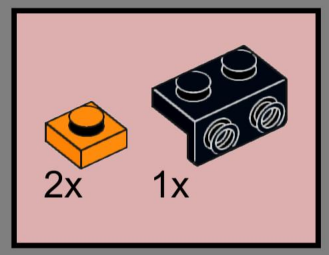


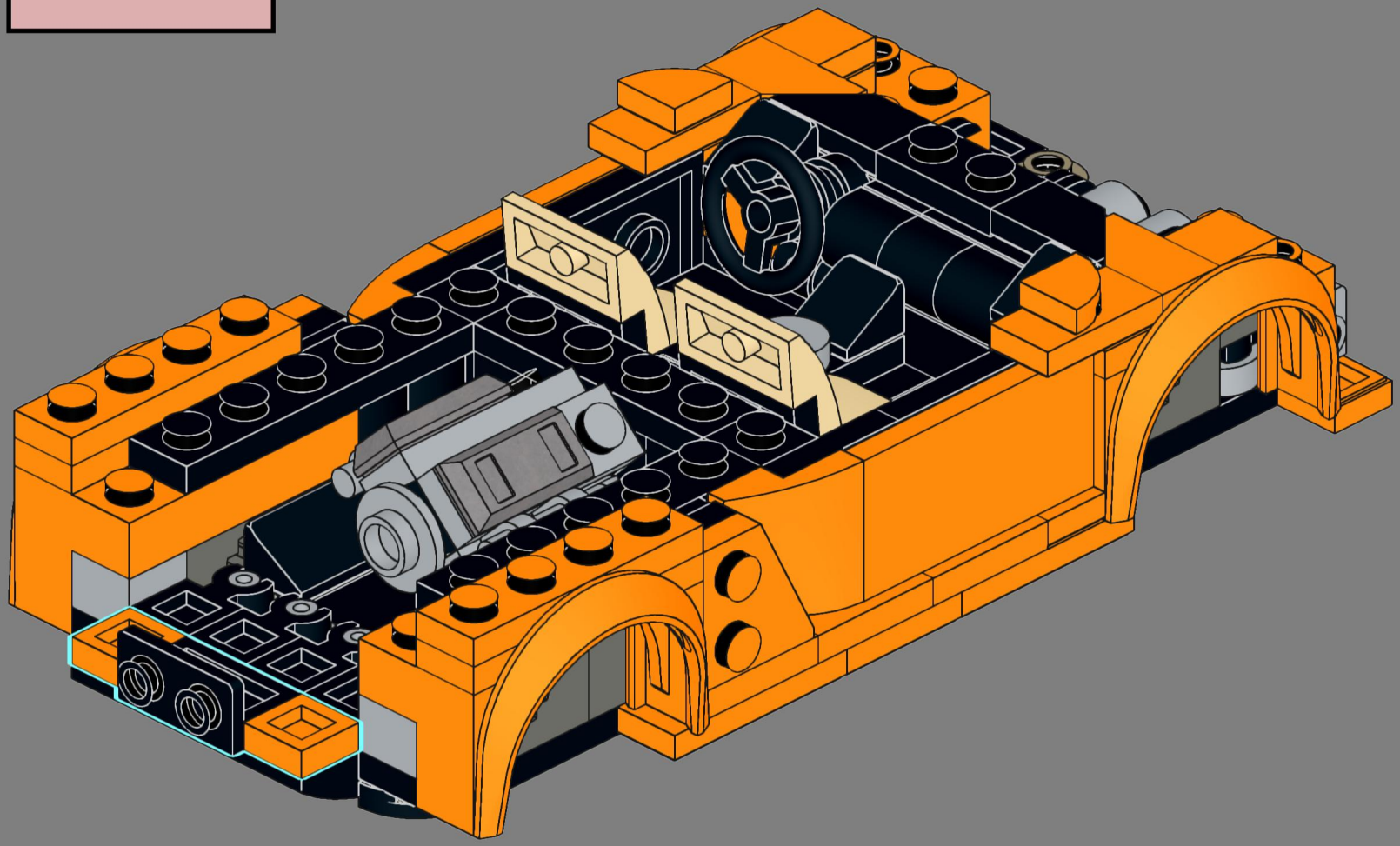

# 53

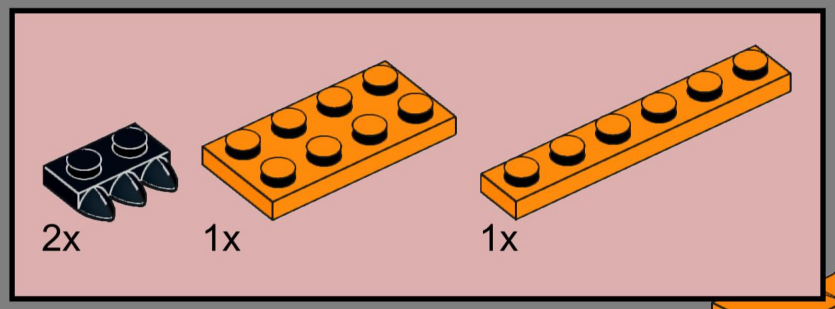


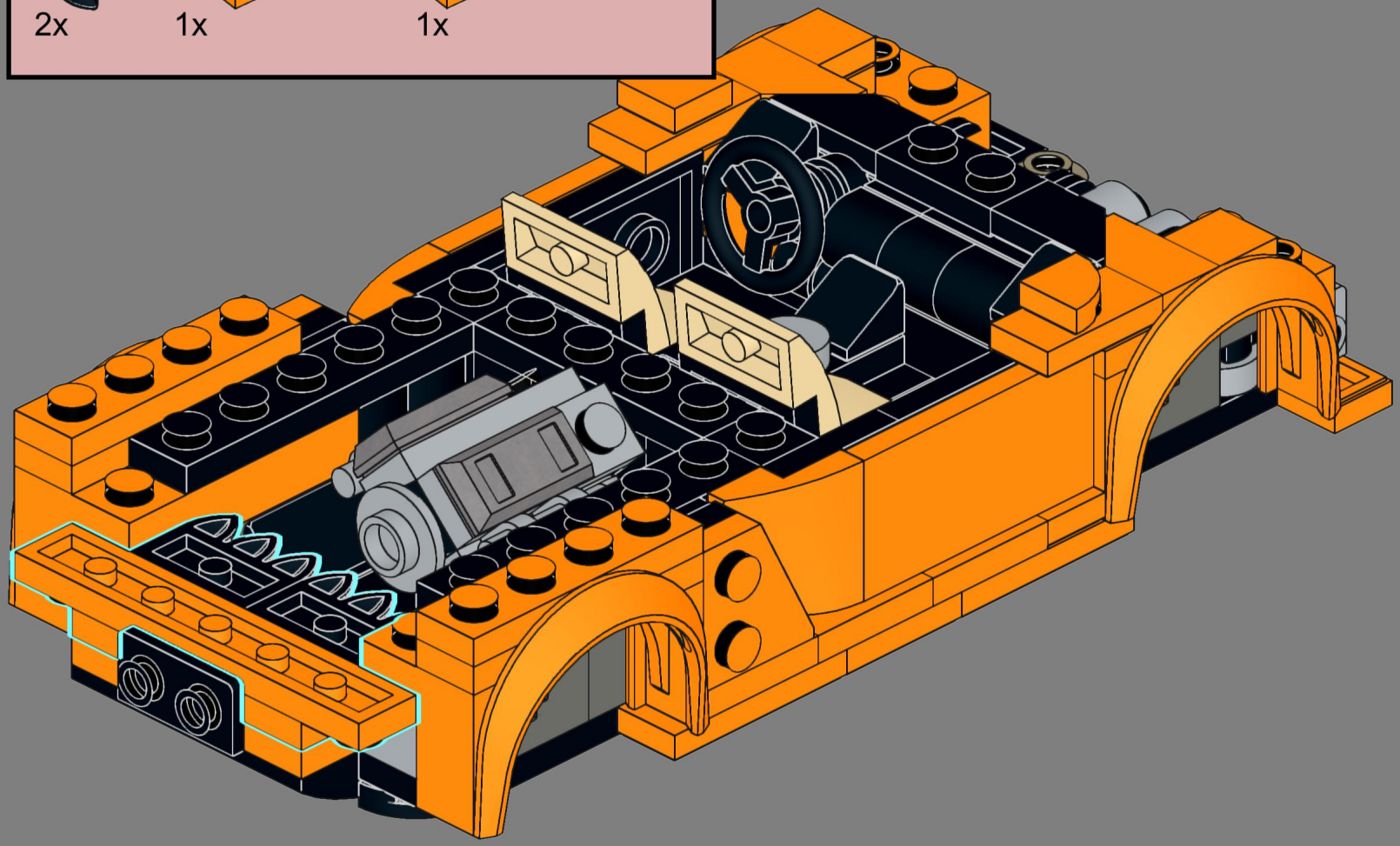

# 54

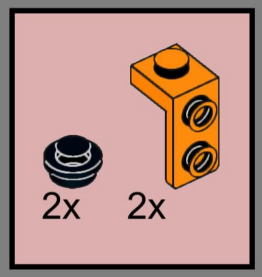


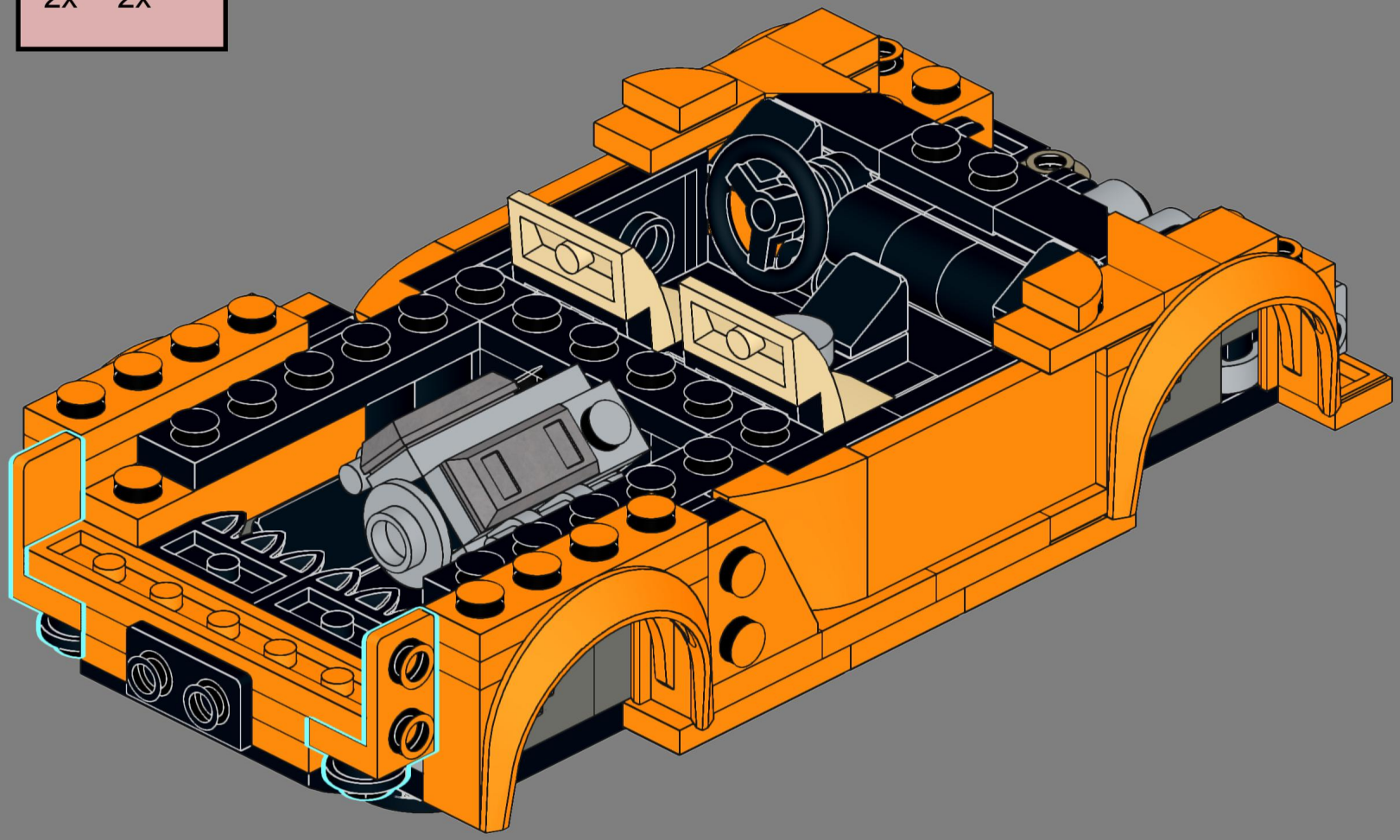

# 55

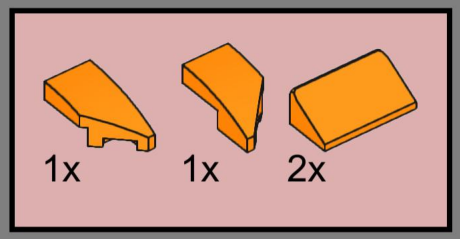


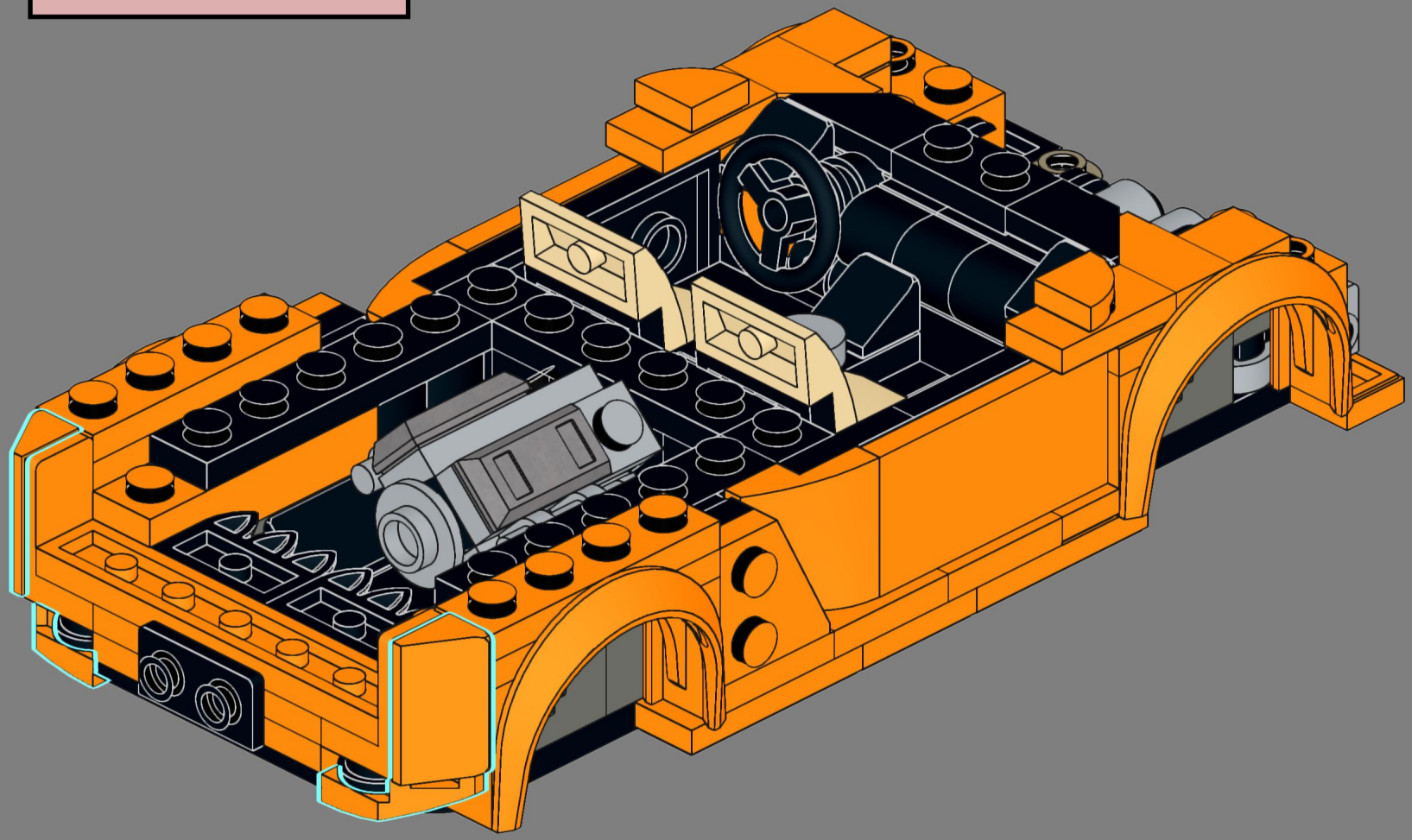

# 56

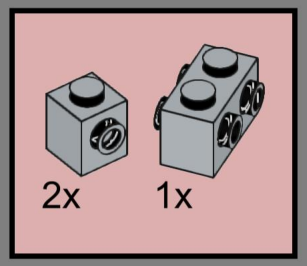


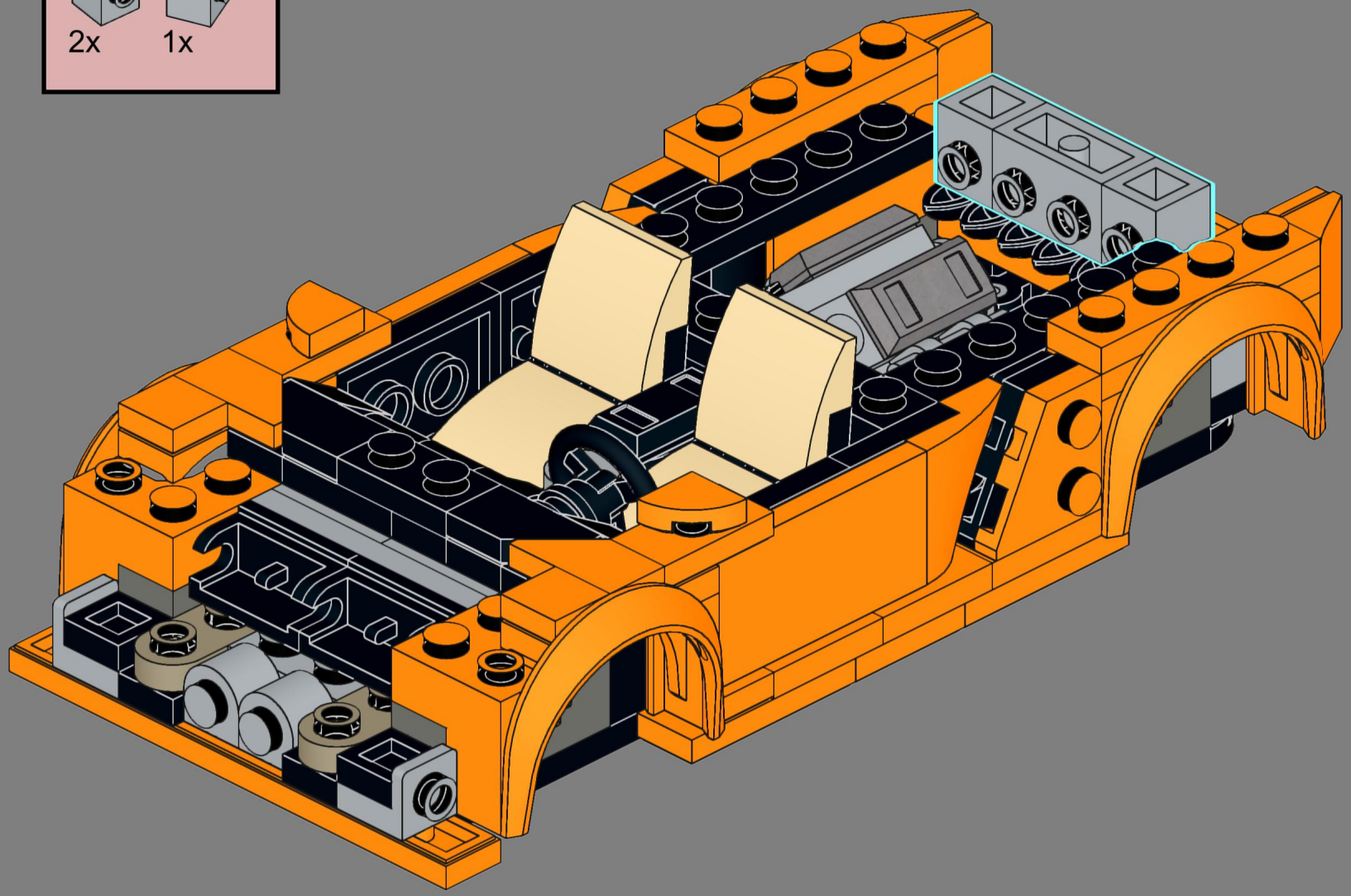

# 57

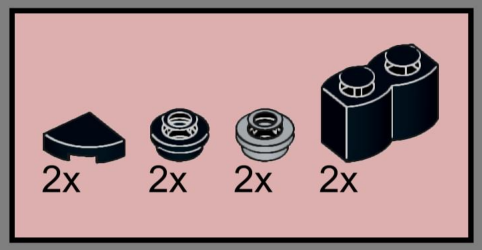


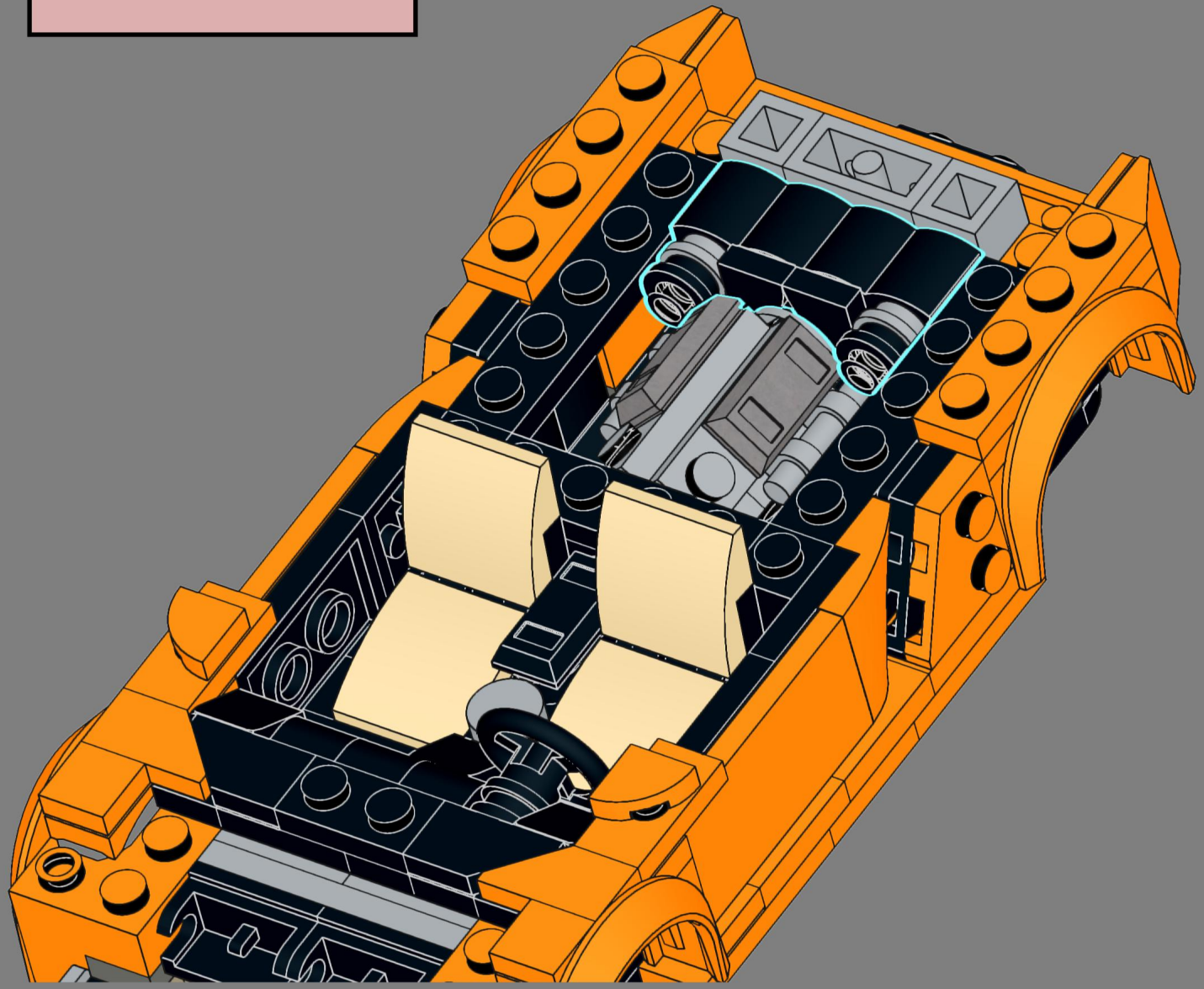

# 58

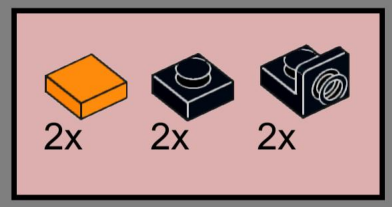


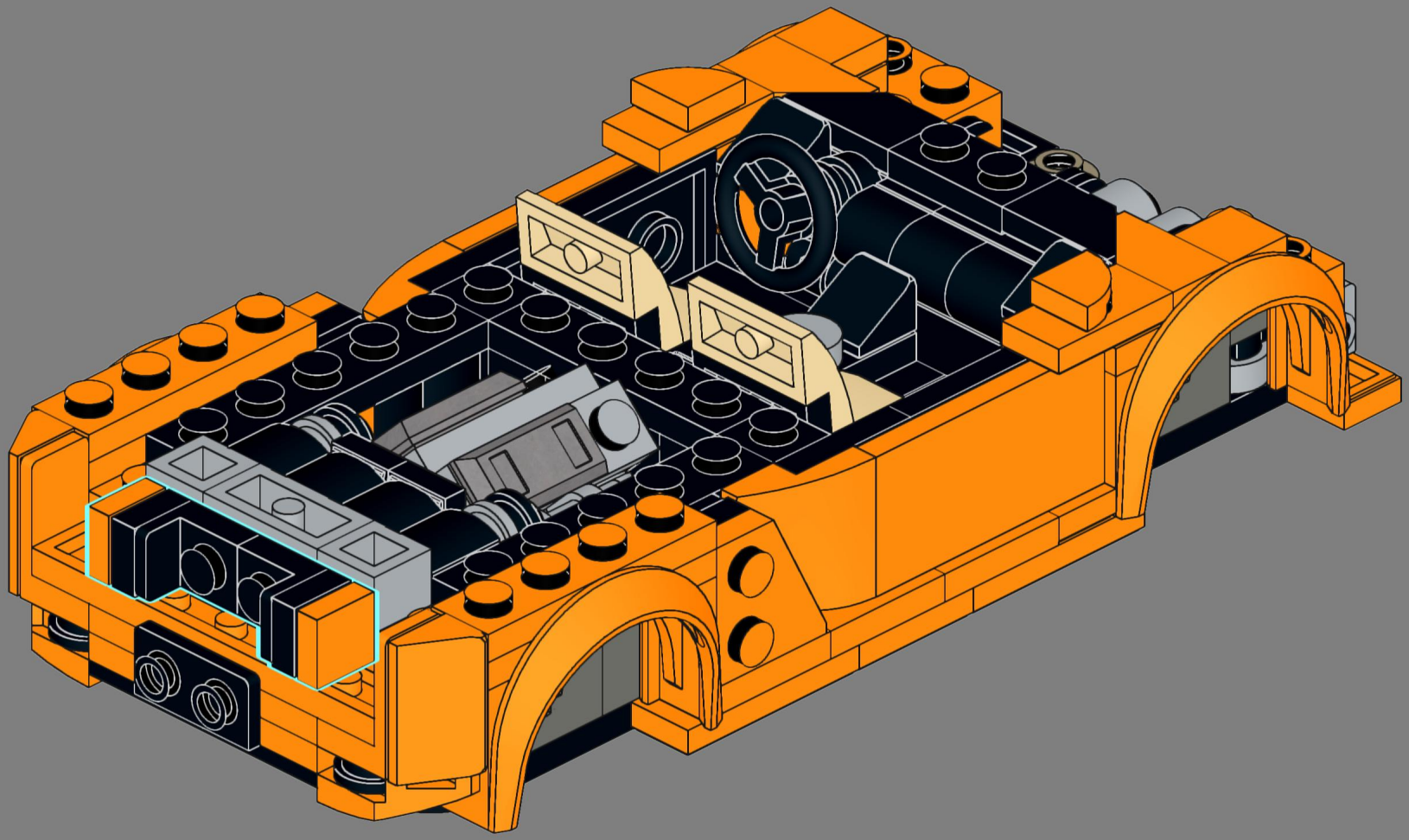

# 59

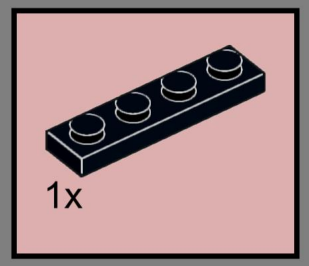


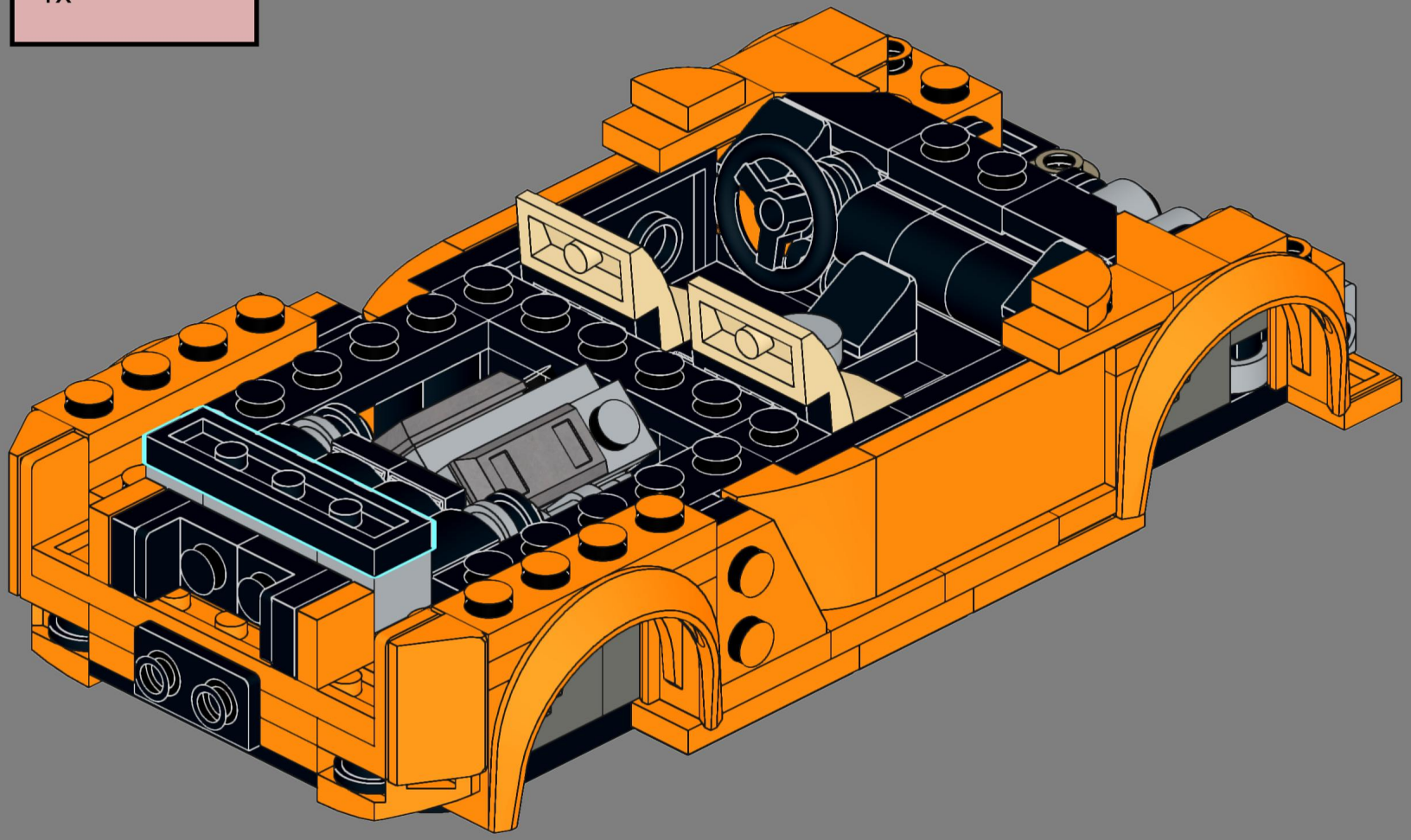

# 60

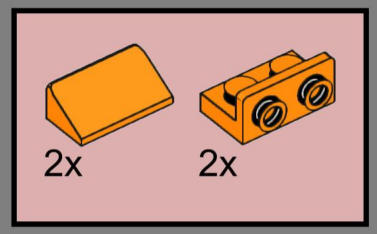


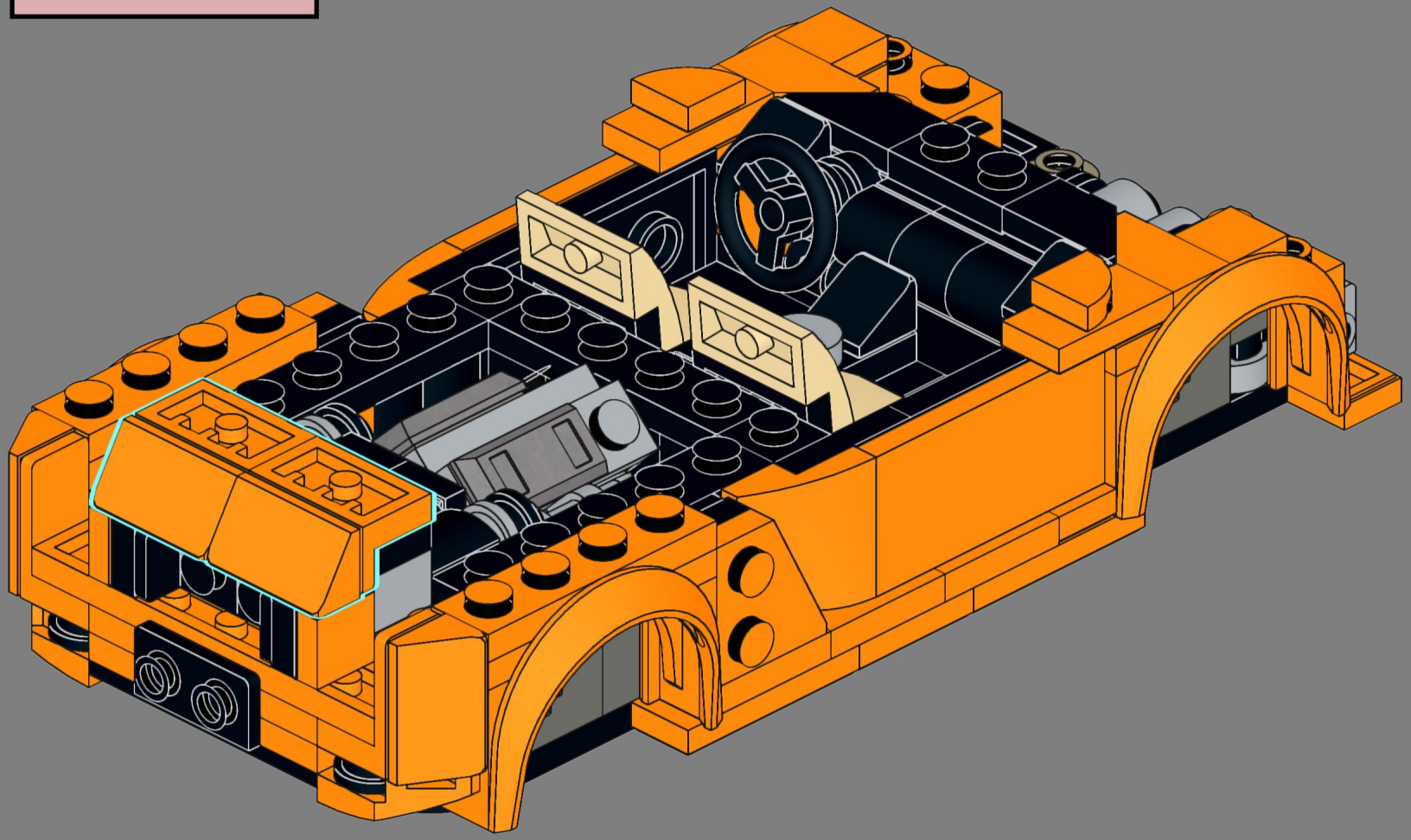

# 61

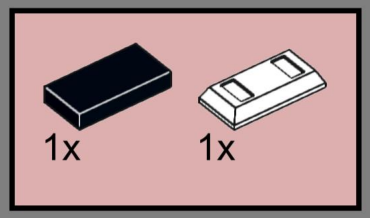


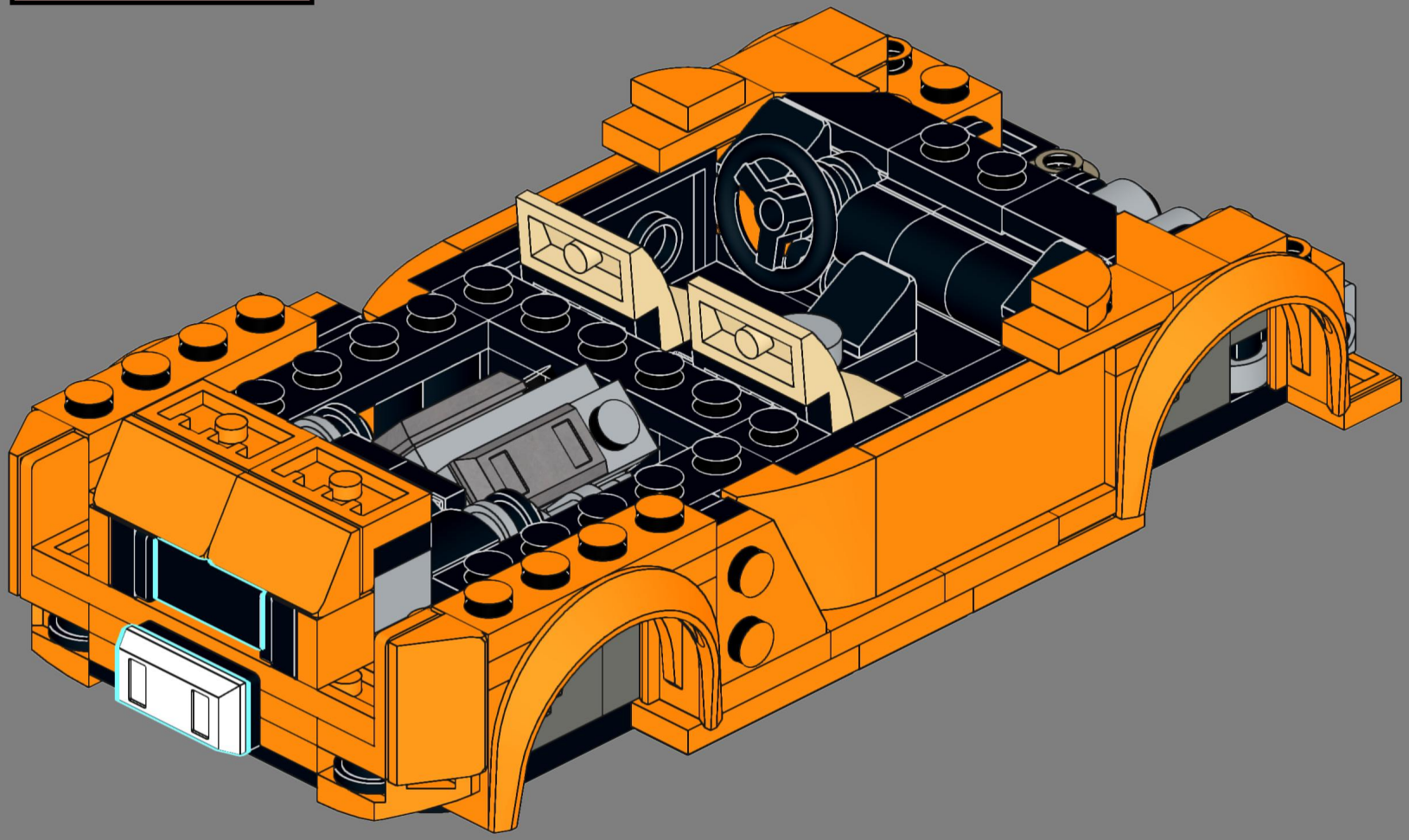

# 62

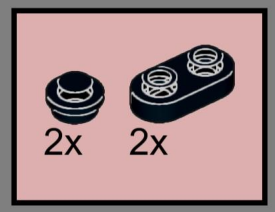


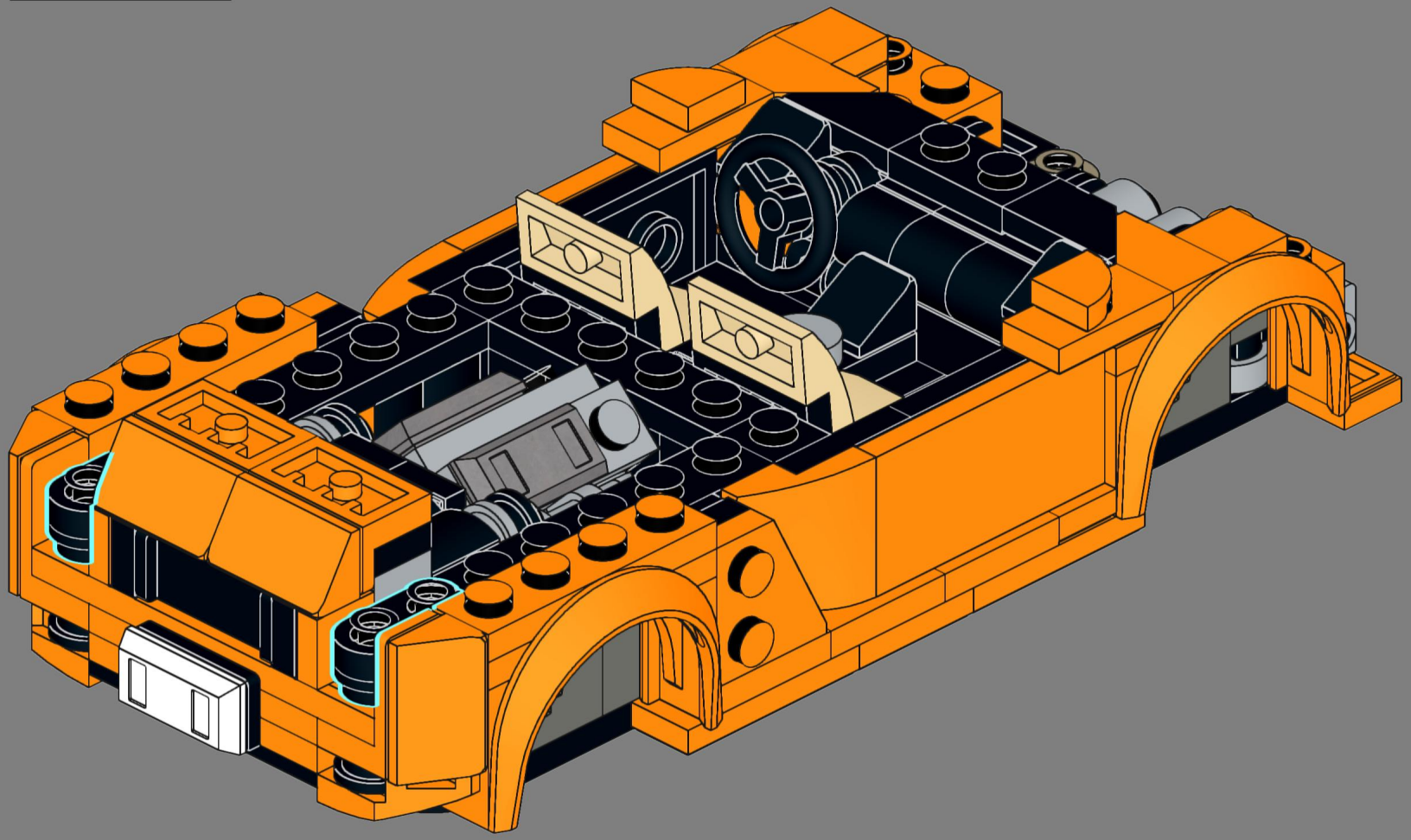

# 63

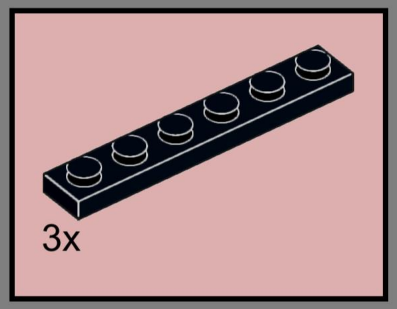


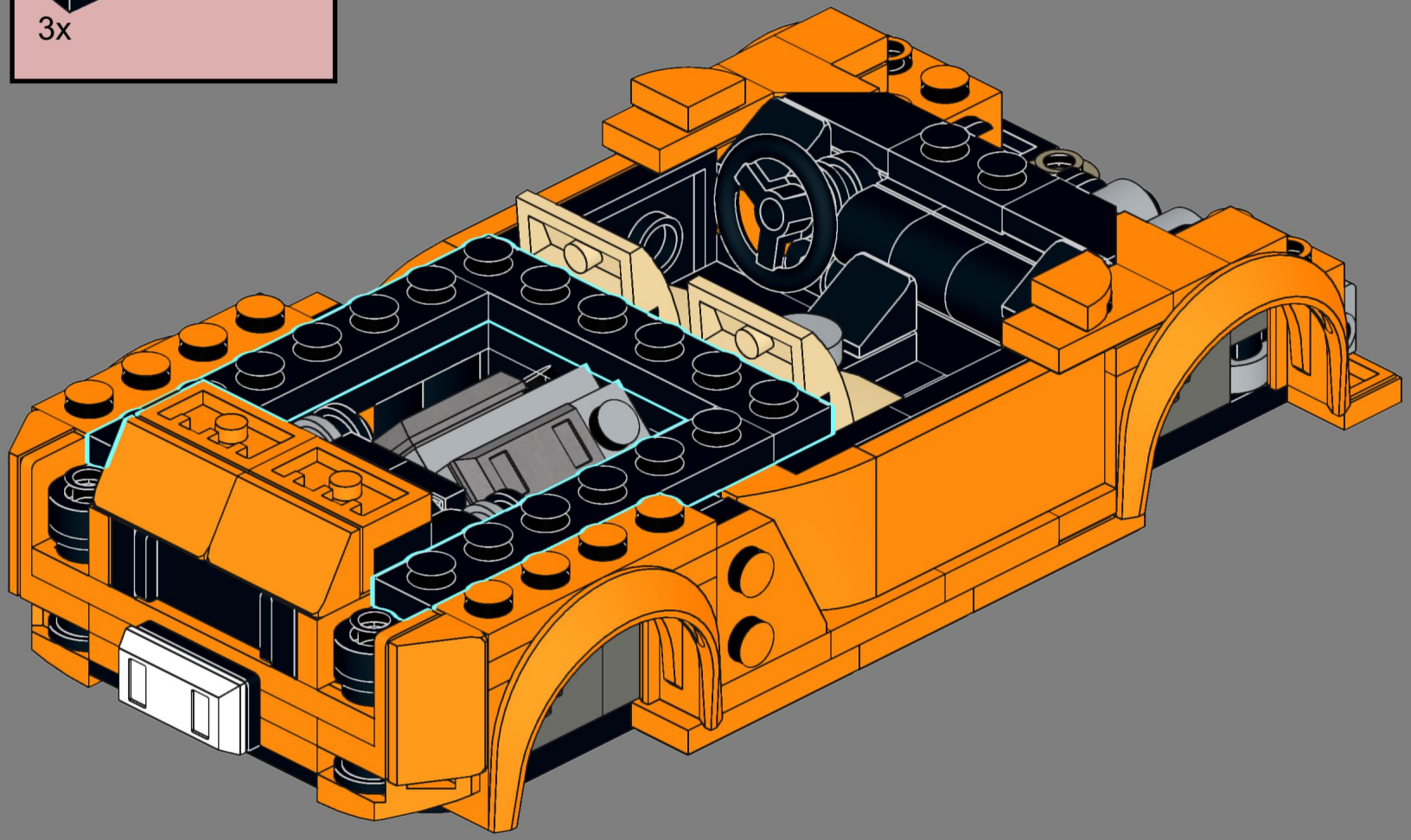

# 64

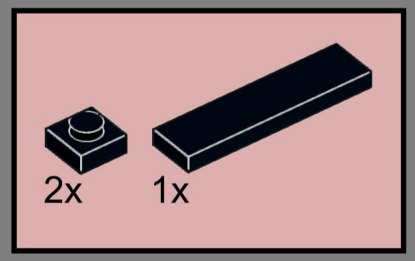


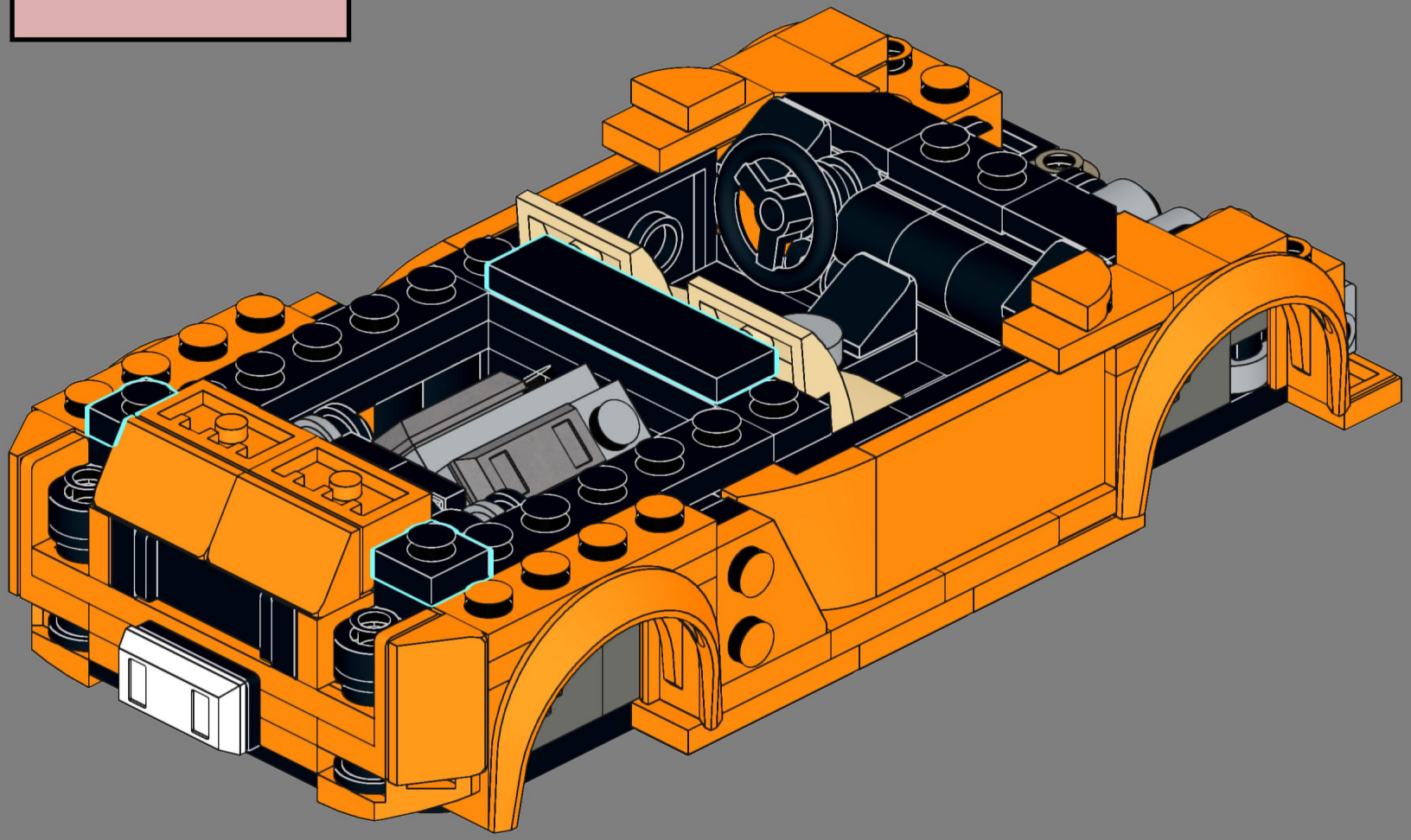

# 65

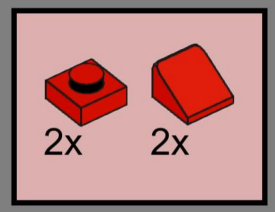


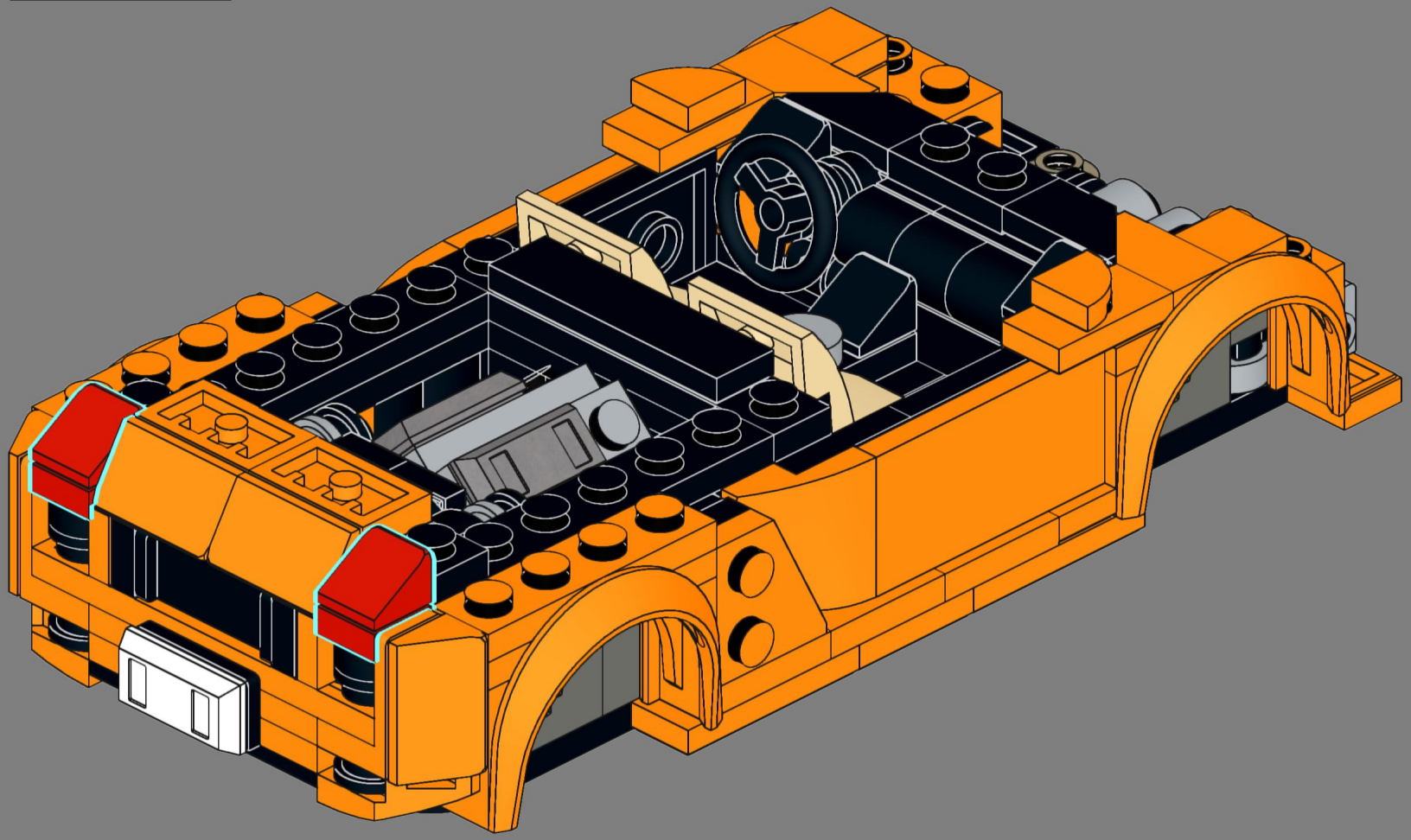

# 66

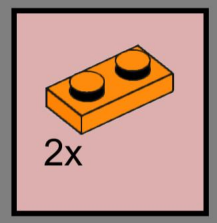


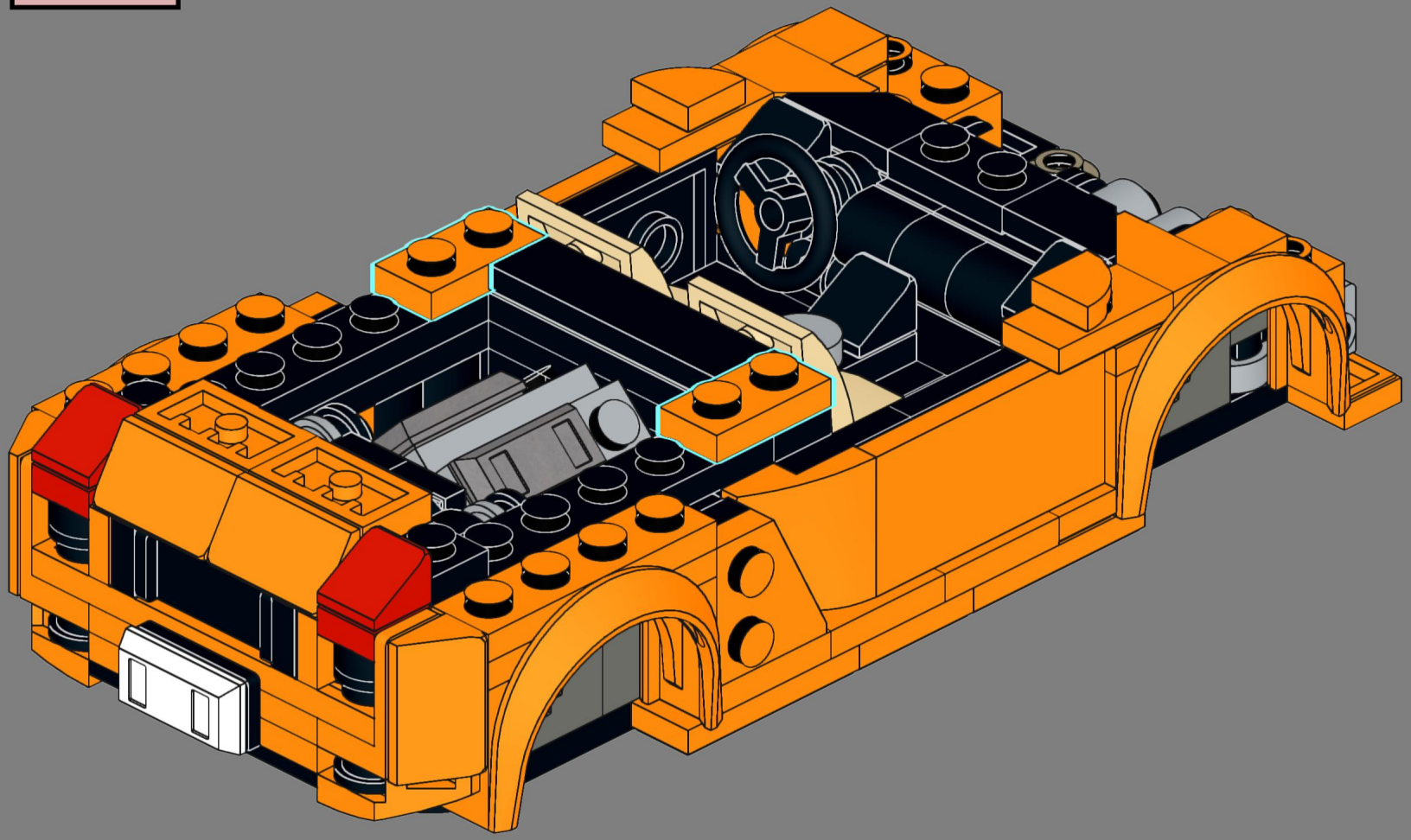

# 67

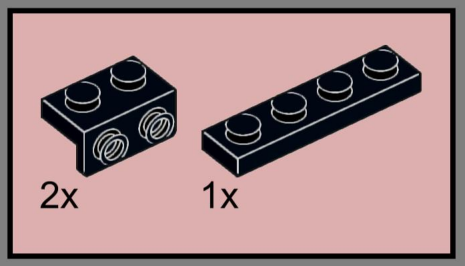


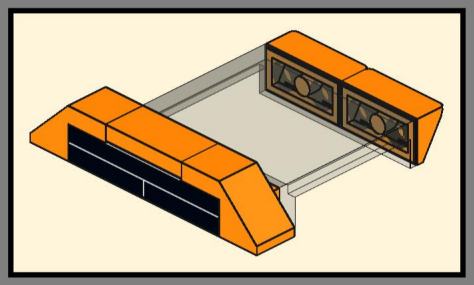

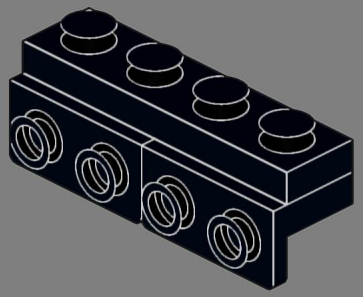

# 68

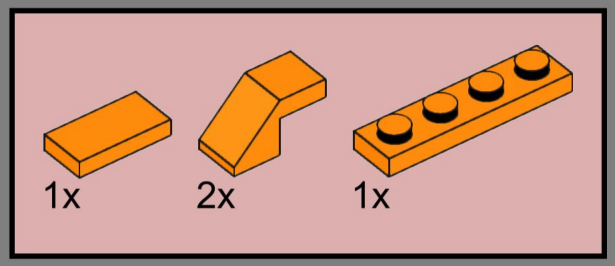


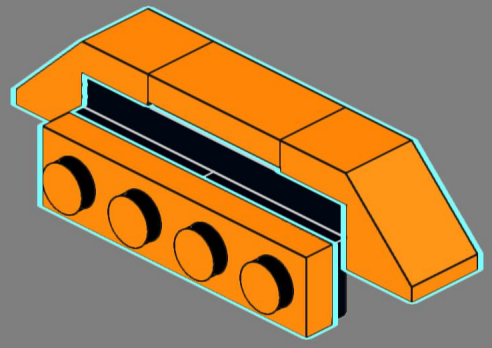

# 69

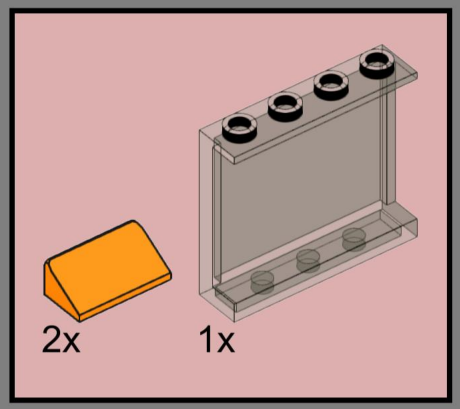


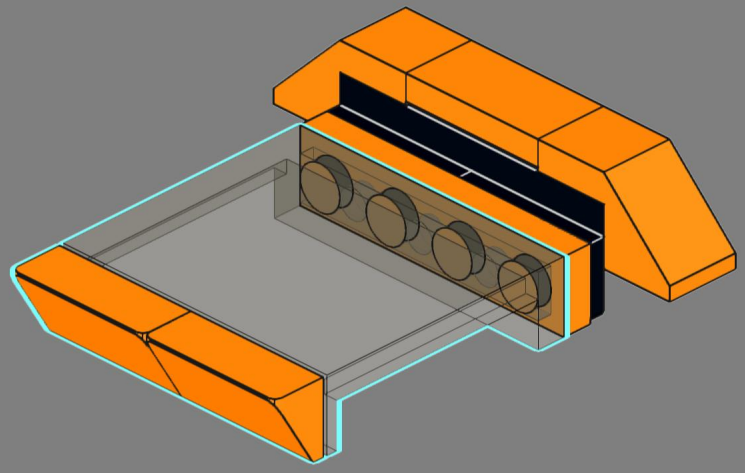

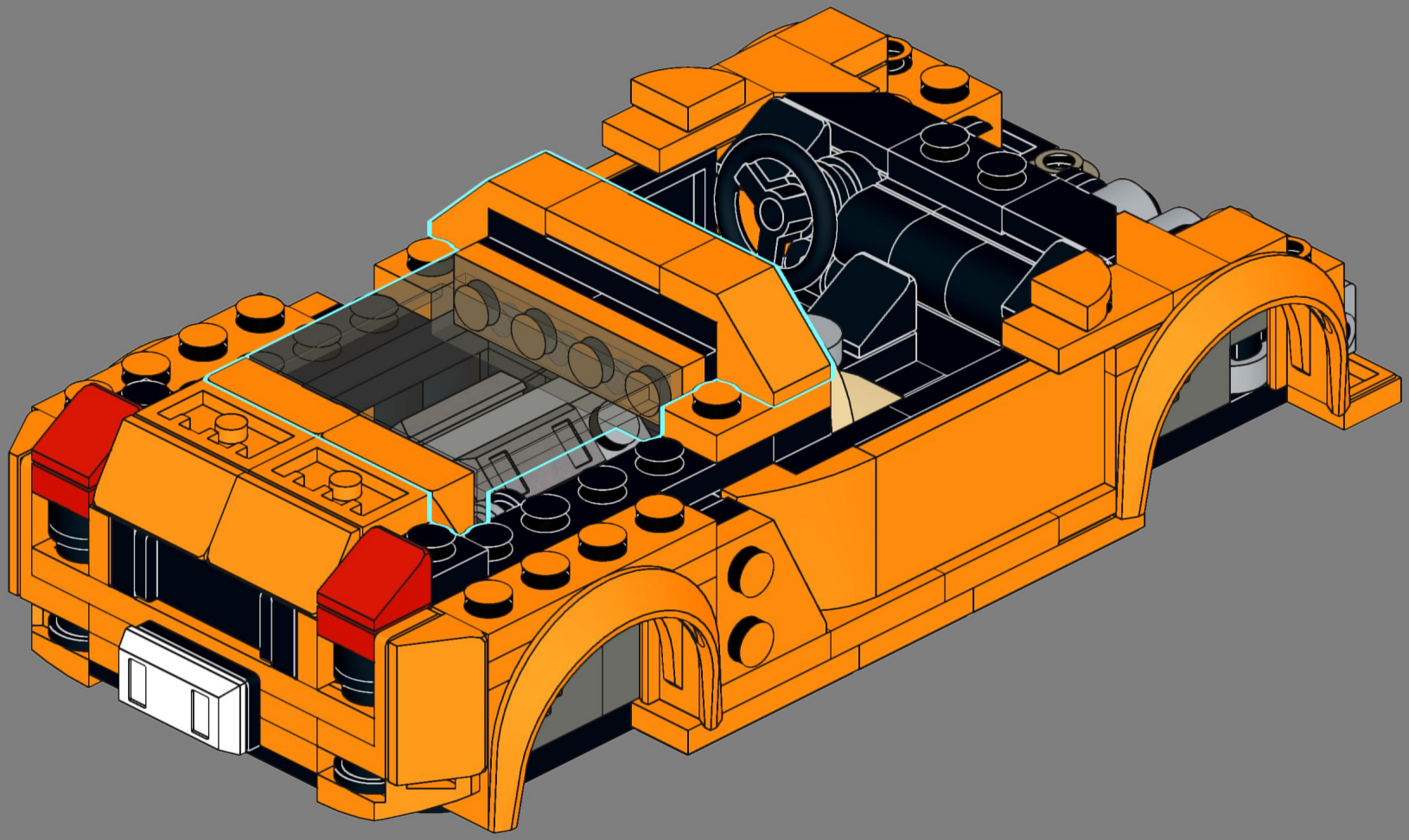

# 71

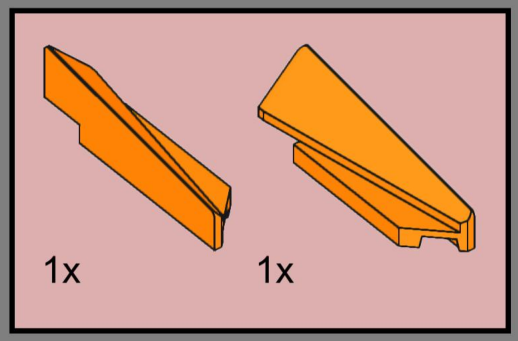


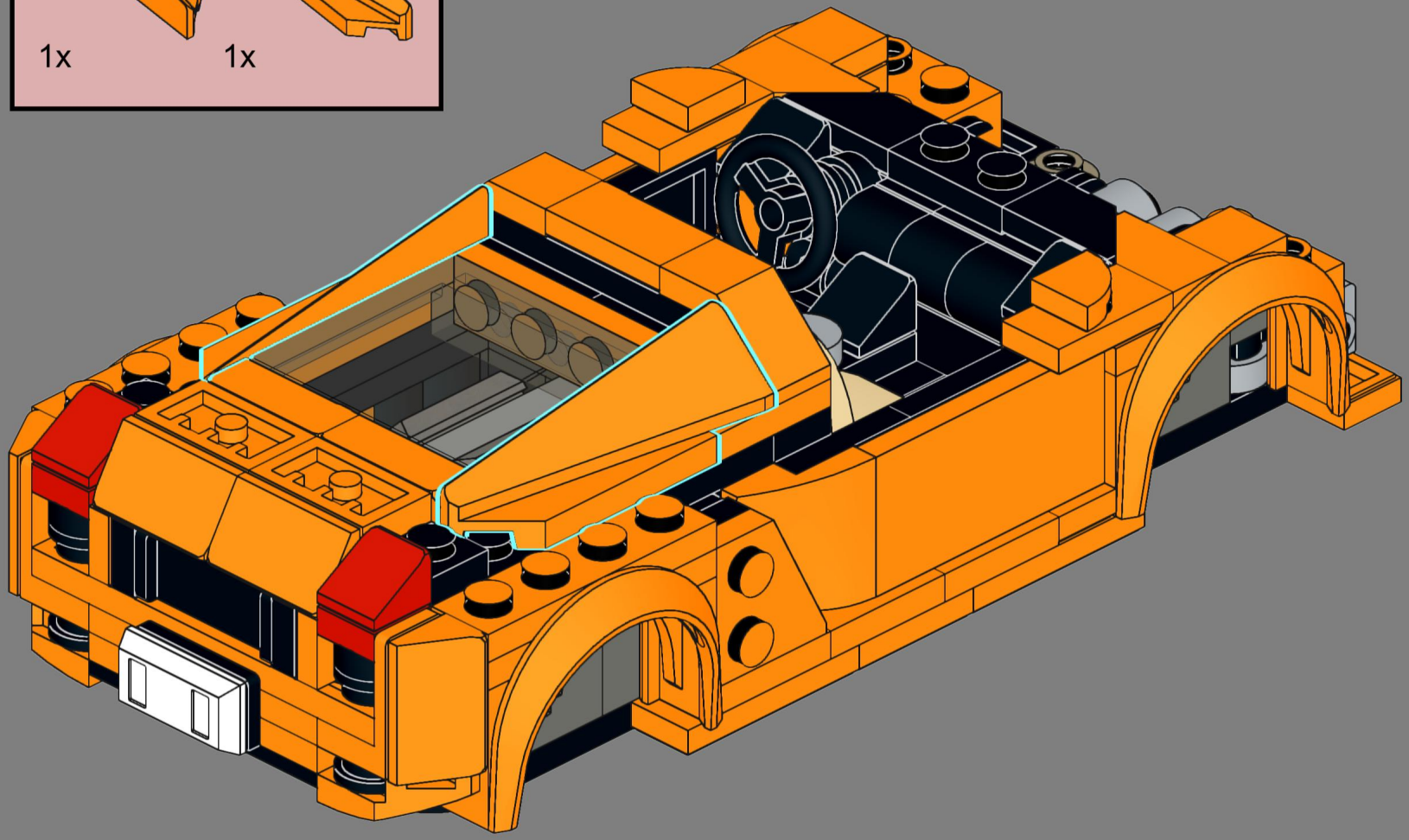

# 72

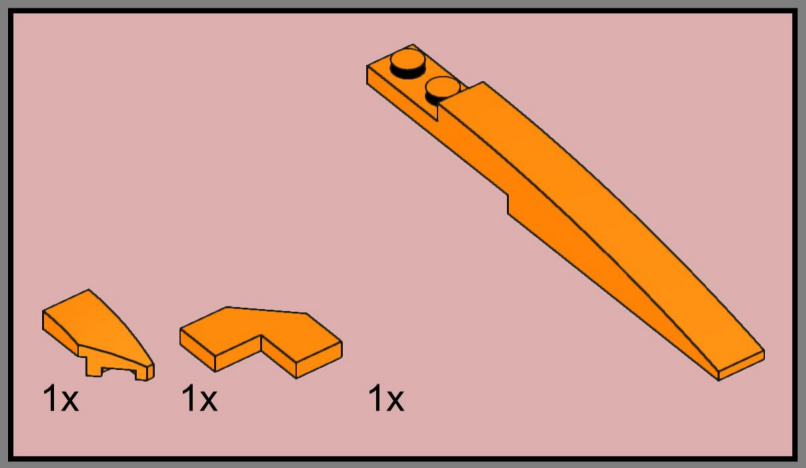


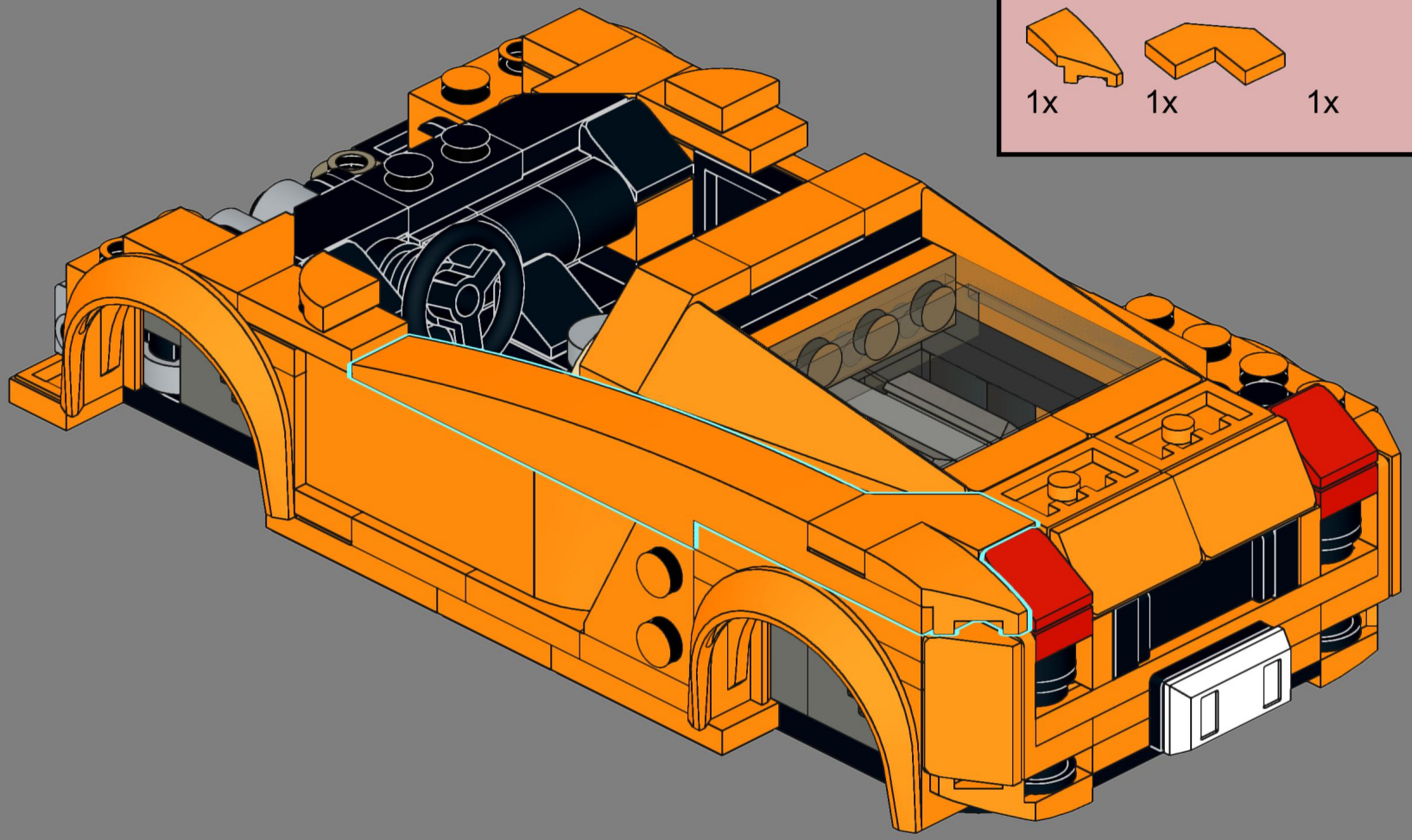

# 73

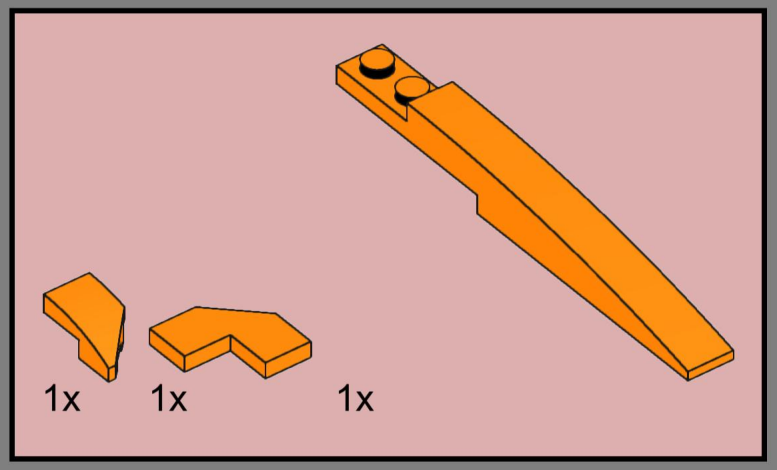


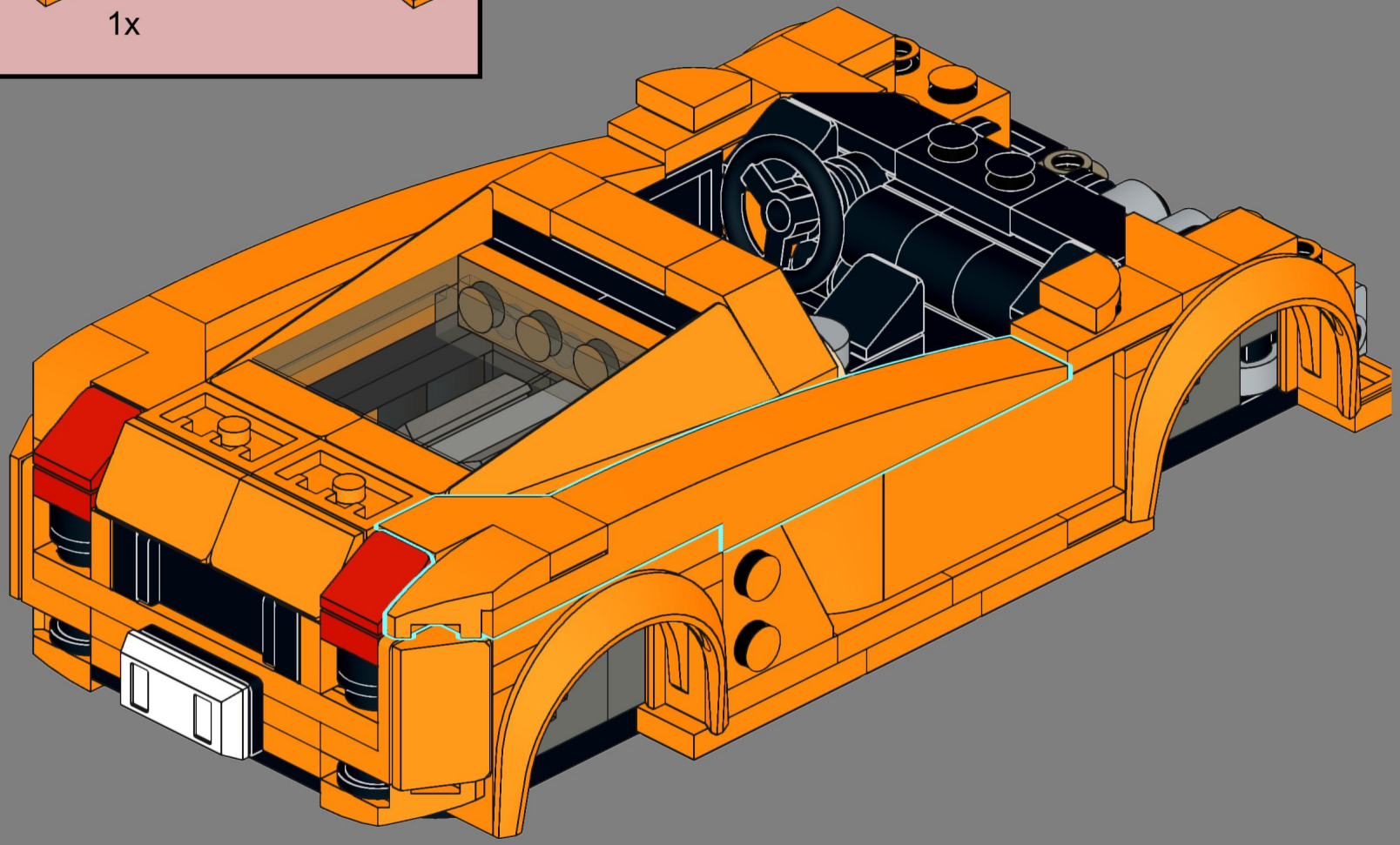

# 74

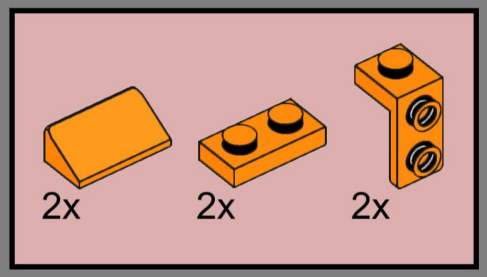

# 75

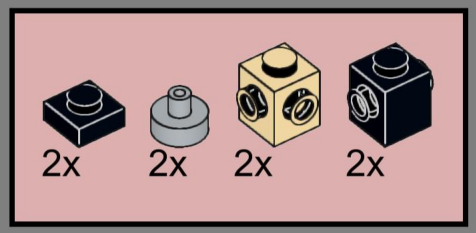


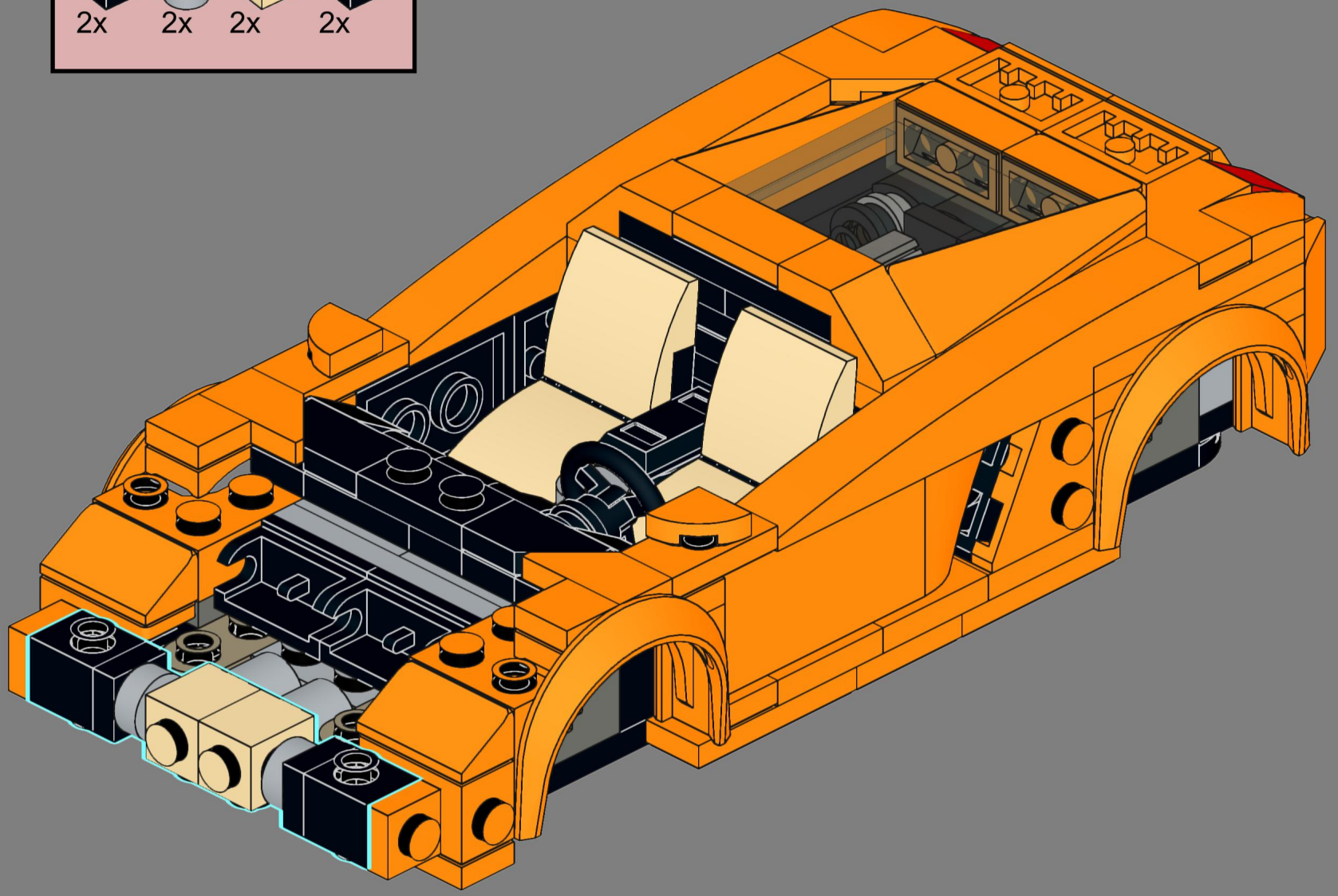

# 76

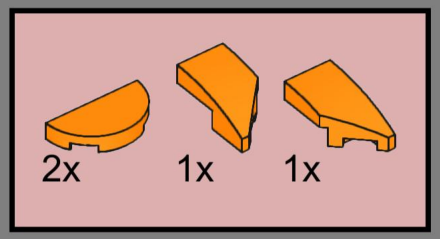


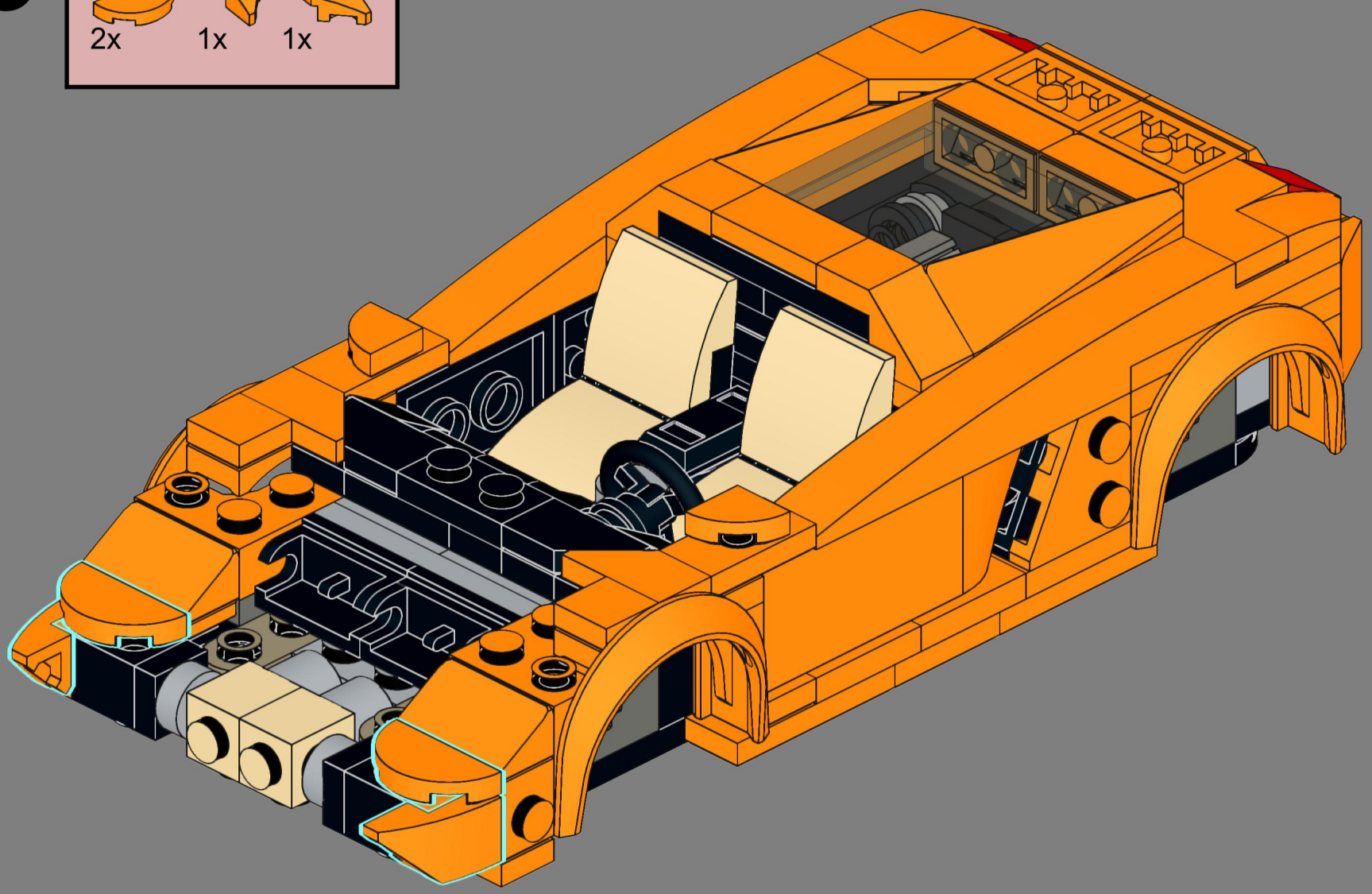

# 77

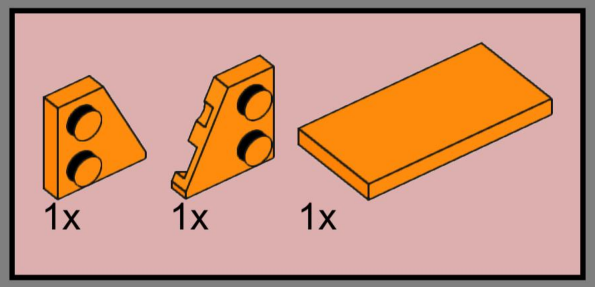

78



# 79

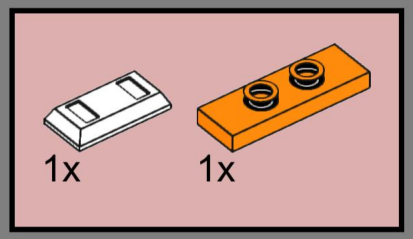

# 80

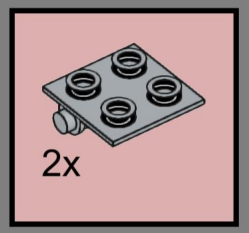


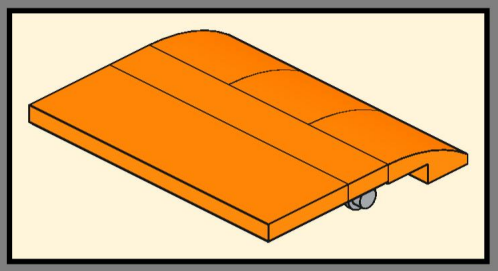

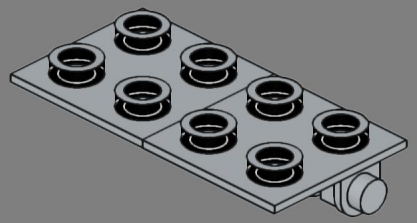

# 81

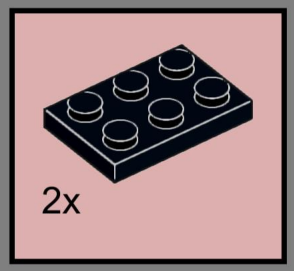


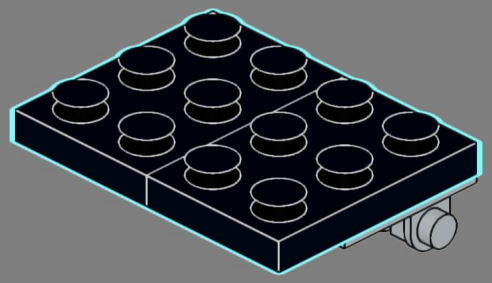

# 82

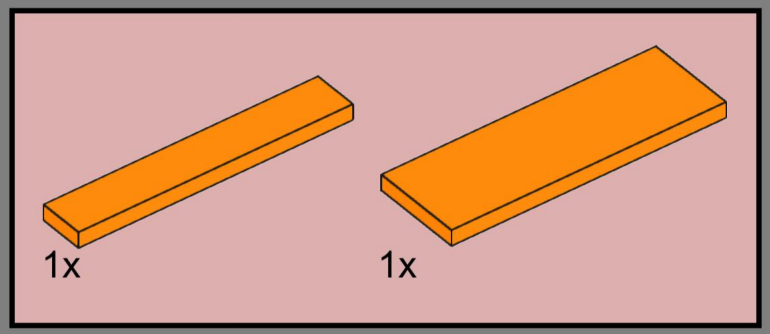


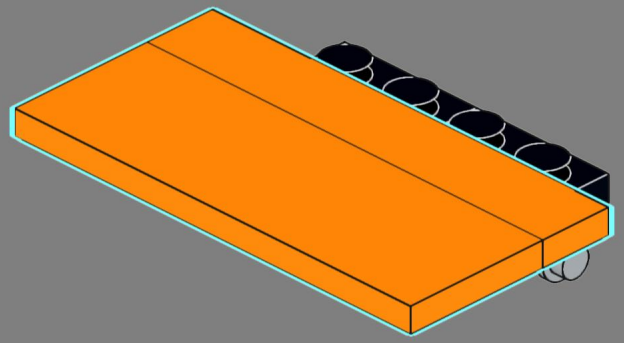

# 83

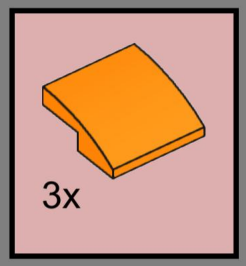


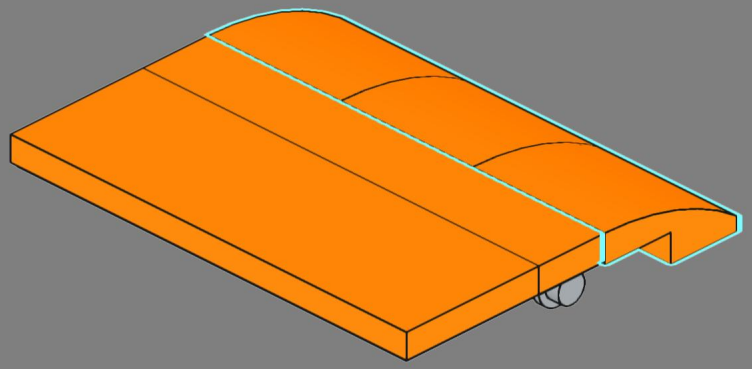

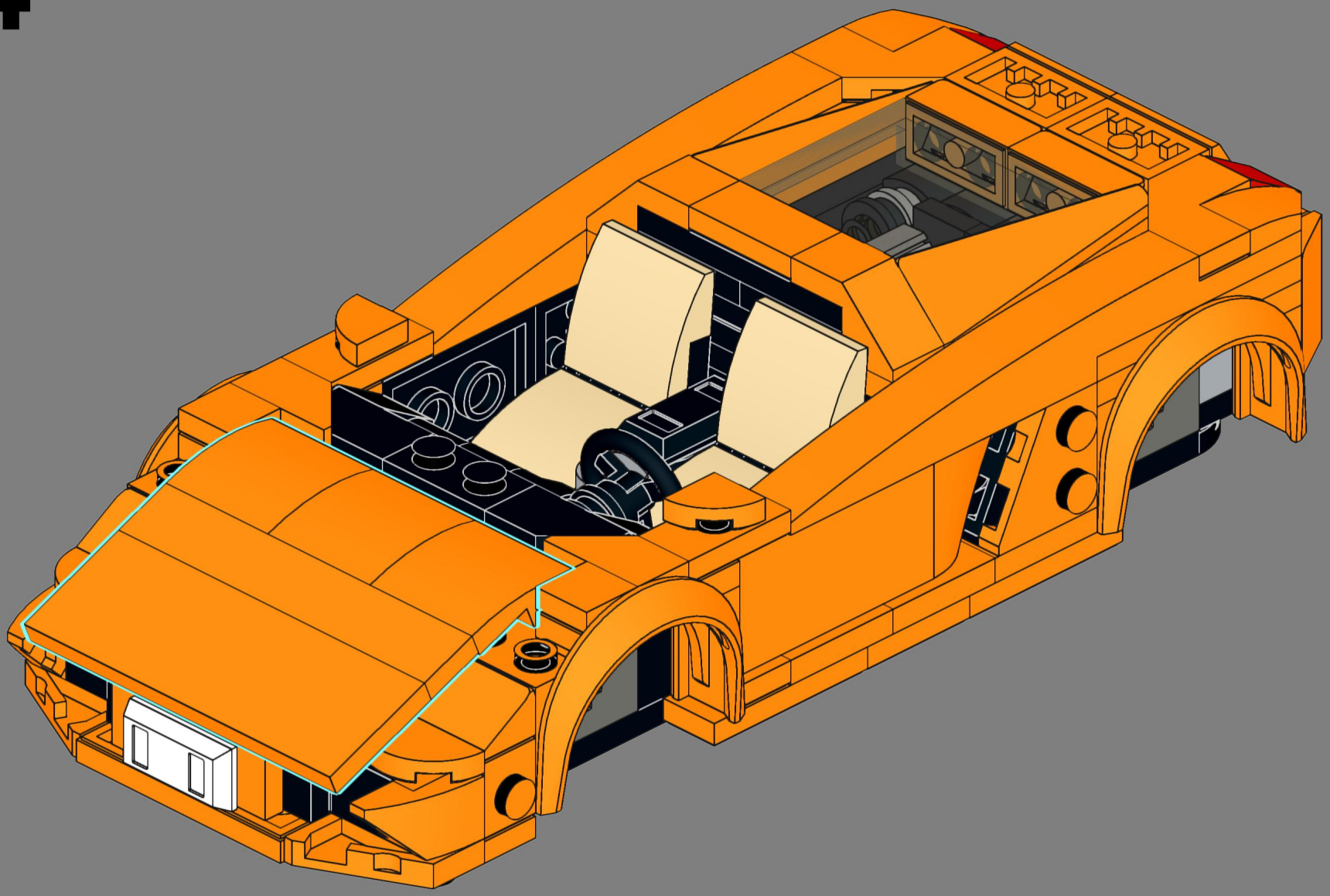

# 85

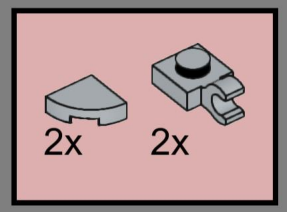

# 86

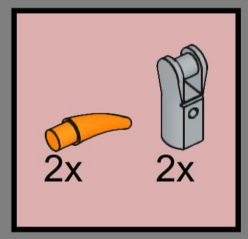

# 87

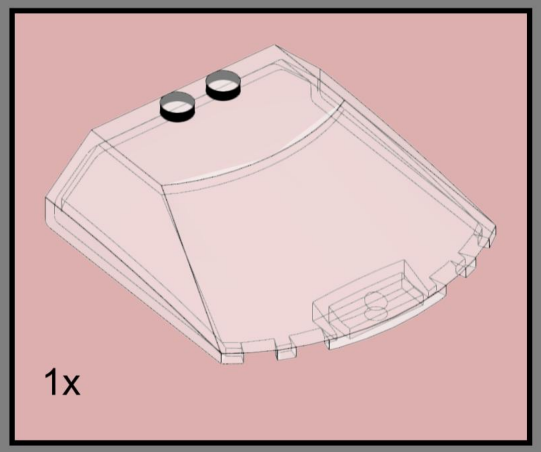

# 88

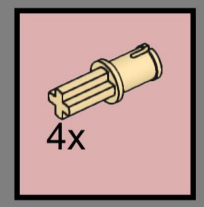

# 89

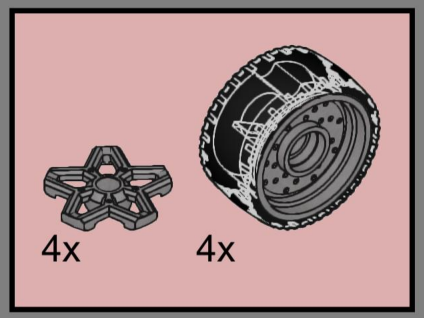

# 90

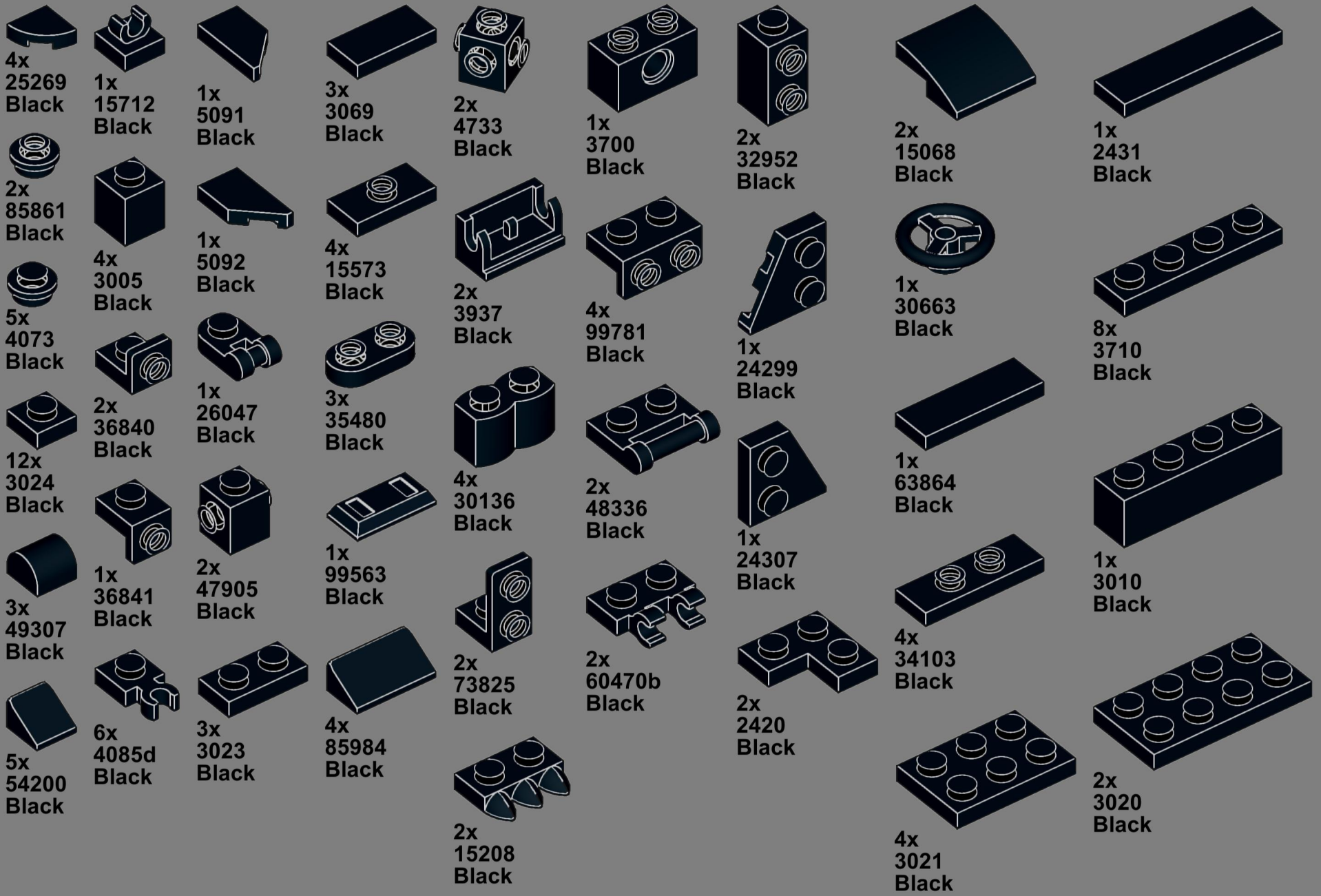
4x
25269
Black
1x
15712
Black
1x
5091
Black
3x
3069
Black
2x
4733
Black
1x
3700
Black
2x
32952
Black
2x
15068
Black
1x
2431
Black
2x
85861
Black
4x
3005
Black
1x
5092
Black
4x
15573
Black
2x
3937
Black
4x
99781
Black
1x
24299
Black
1x
30663
Black
8x
3710
Black
5x
4073
Black
2x
36840
Black
1x
26047
Black
3x
35480
Black
12x
3024
Black
4x
30136
Black
2x
48336
Black
1x
63864
Black
3x
49307
Black
1x
36841
Black
2x
47905
Black
1x
99563
Black
1x
24307
Black
1x
3010
Black
5x
54200
Black
6x
4085d
Black
3x
3023
Black
4x
85984
Black
2x
73825
Black
2x
60470b
Black
2x
2420
Black
4x
34103
Black
4x
3021
Black
2x
3020
Black
2x
15208
Black

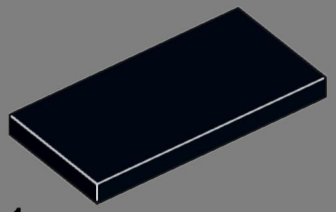

1x
87079
Black

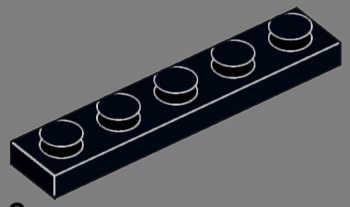

2x
78329
Black

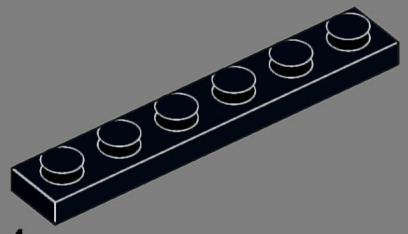

4x
3666
Black

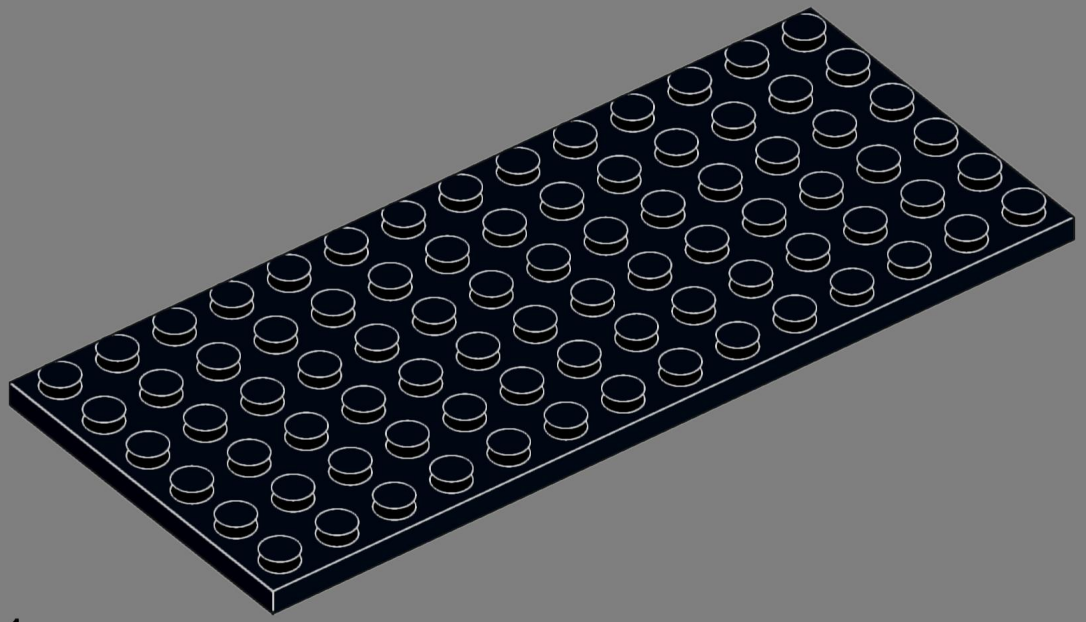

1x
3456
Black

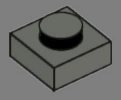

2x
3024
Dark Bluish Gray

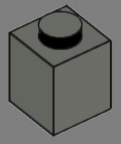

2x
3005
Dark Bluish Gray

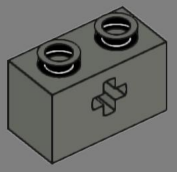

4x
32064
Dark Bluish Gray



1x
98138
Light Bluish Gray



2x
25269
Light Bluish Gray

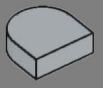

2x
24246
Light Bluish Gray



2x
85861
Light Bluish Gray

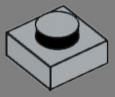

2x
3024
Light Bluish Gray

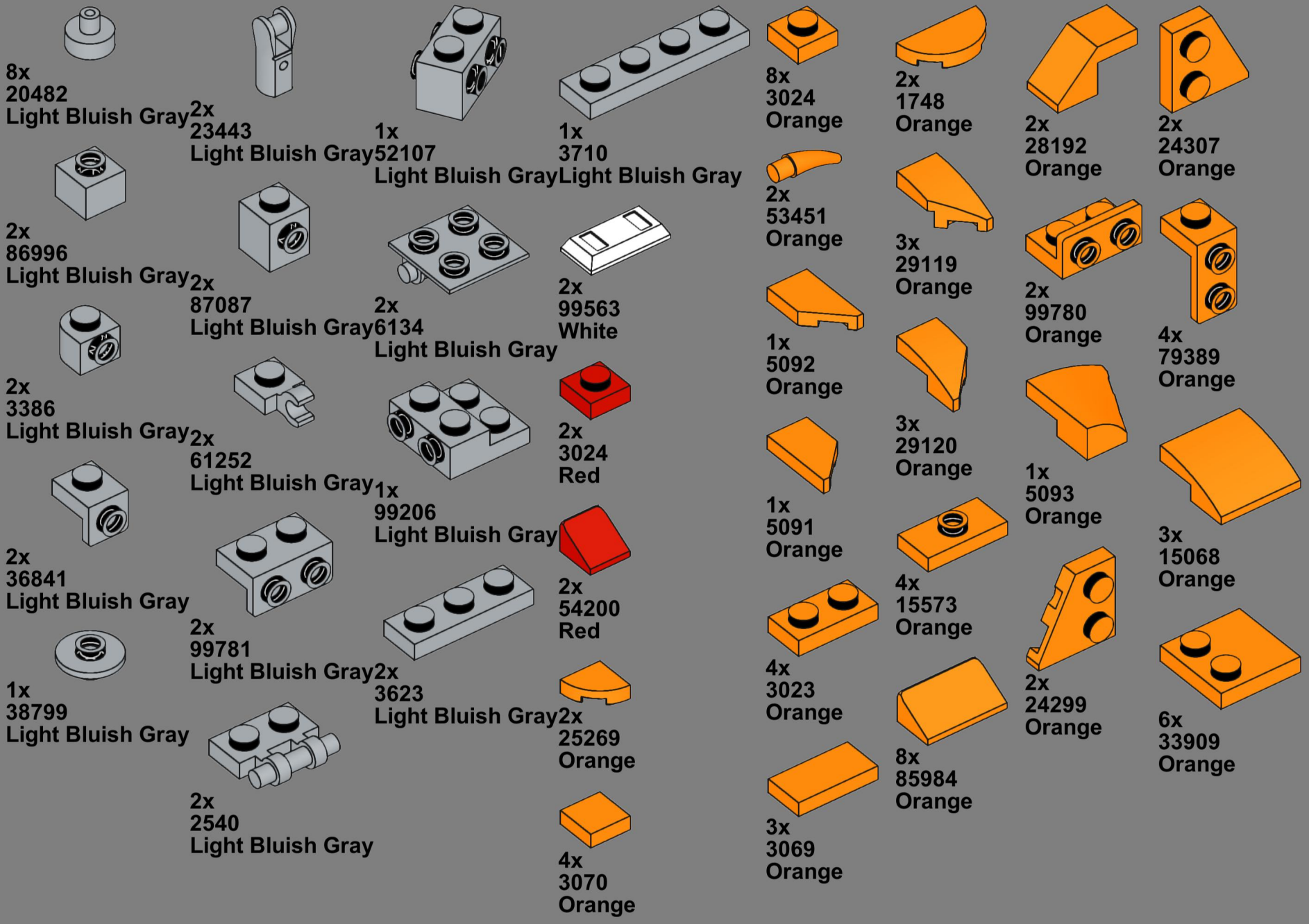
8x
20482
Light Bluish Gray
2x
23443
Light Bluish Gray
1x
52107
Light Bluish Gray
1x
3710
Light Bluish Gray
8x
3024
Orange
2x
1748
Orange
2x
28192
Orange
2x
24307
Orange
2x
86996
Light Bluish Gray
2x
87087
Light Bluish Gray
2x
6134
Light Bluish Gray
2x
99563
White
2x
53451
Orange
3x
29119
Orange
2x
99780
Orange
4x
79389
Orange
2x
3386
Light Bluish Gray
2x
61252
Light Bluish Gray
1x
99206
Light Bluish Gray
2x
3024
Red
1x
5092
Orange
3x
29120
Orange
1x
5093
Orange
2x
36841
Light Bluish Gray
2x
99781
Light Bluish Gray
2x
54200
Red
1x
5091
Orange
4x
15573
Orange
3x
15068
Orange
1x
38799
Light Bluish Gray
2x
3623
Light Bluish Gray
2x
25269
Orange
4x
3023
Orange
2x
24299
Orange
6x
33909
Orange
2x
2540
Light Bluish Gray
4x
3070
Orange
3x
3069
Orange
8x
85984
Orange

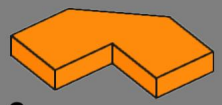

2x
27263
Orange

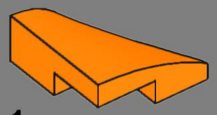

1x
5095
Orange

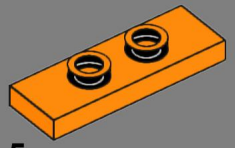

5x
34103
Orange

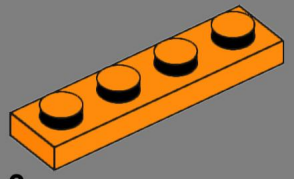

3x
3710
Orange

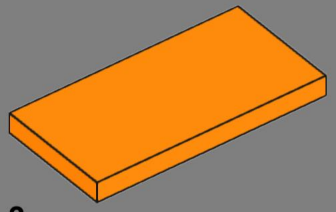

3x
87079
Orange

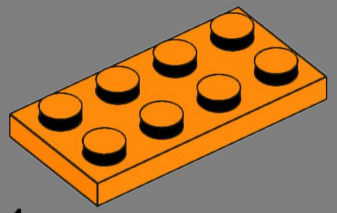

1x
3020
Orange

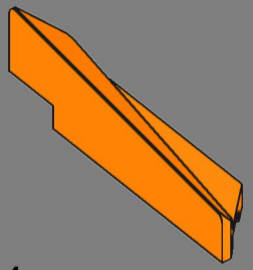

1x
3388
Orange

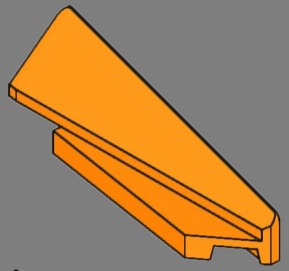

1x
3389
Orange

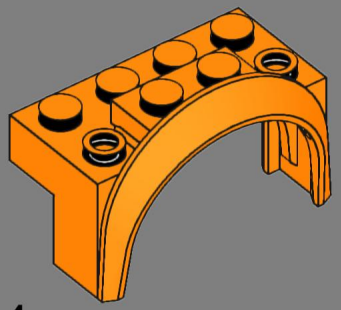

4x
3387
Orange

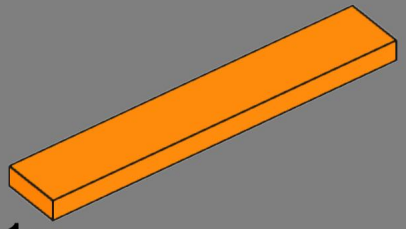

1x
6636
Orange

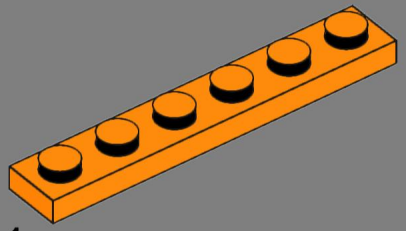

1x
3666
Orange

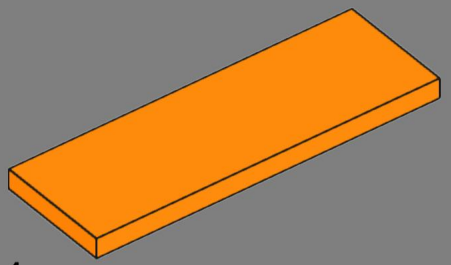

1x
69729
Orange

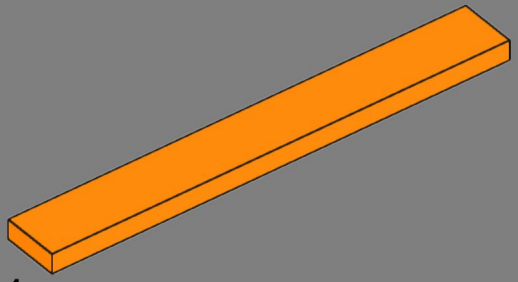

1x
4162
Orange

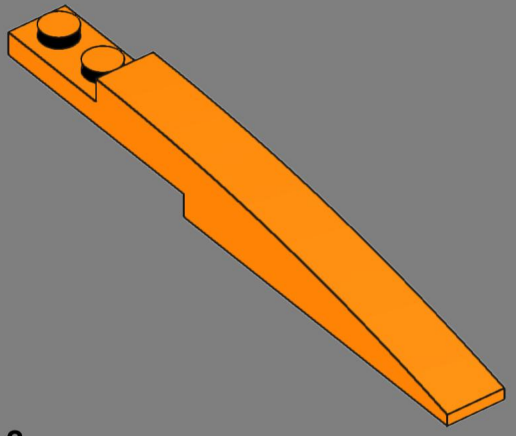

2x
85970
Orange



4x
35480
Dark Tan

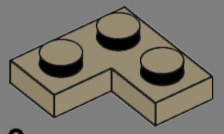

2x
2420
Dark Tan



2x
26604
Tan

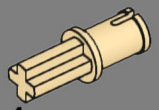

4x
3749
Tan

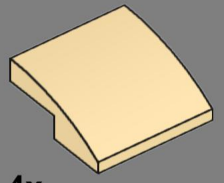

4x
15068
Tan

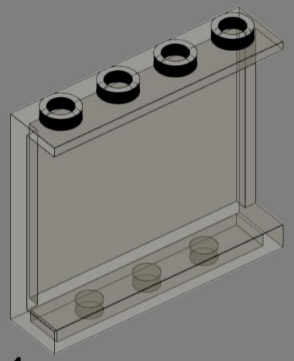

1x
60581
Trans-Brown



4x
6825a
Flat Silver



4x
72206pb01
Flat Silver

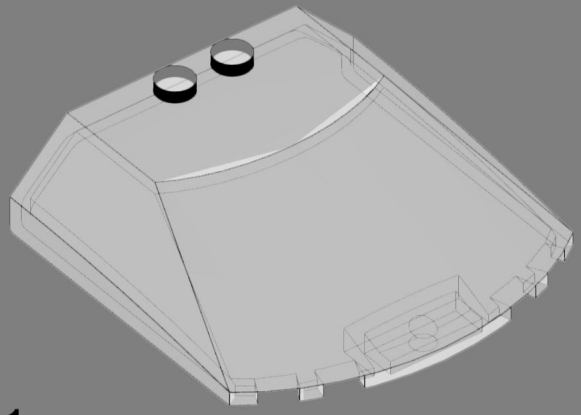

1x
65633
Trans-Clear

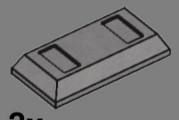

2x
99563
Flat Silver