1



2

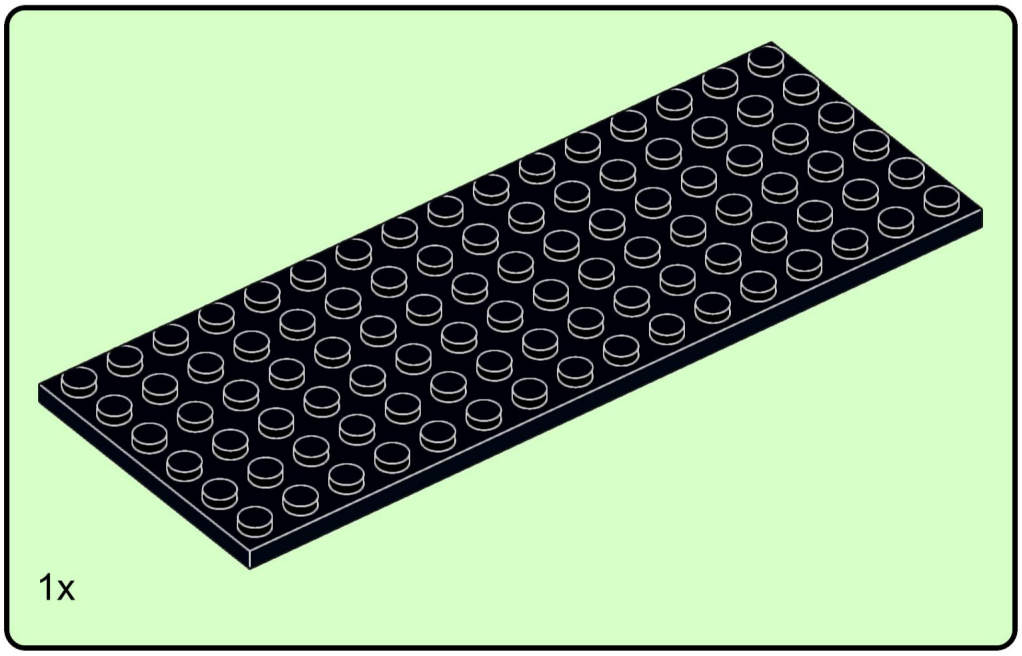

1x

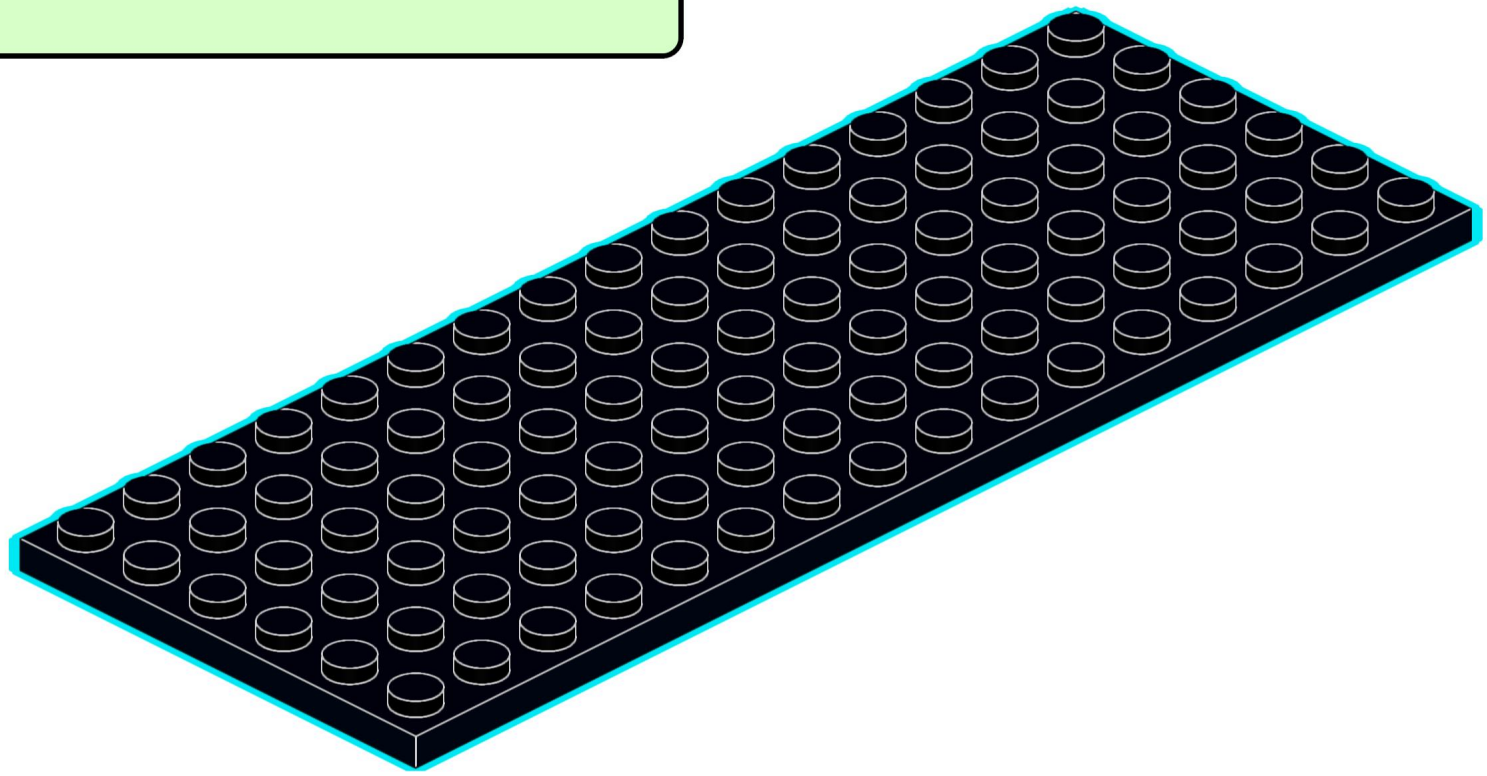

3

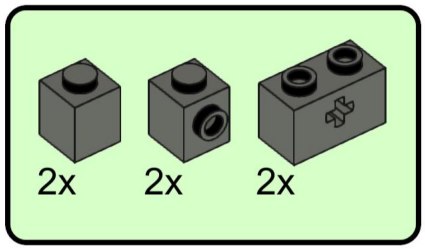

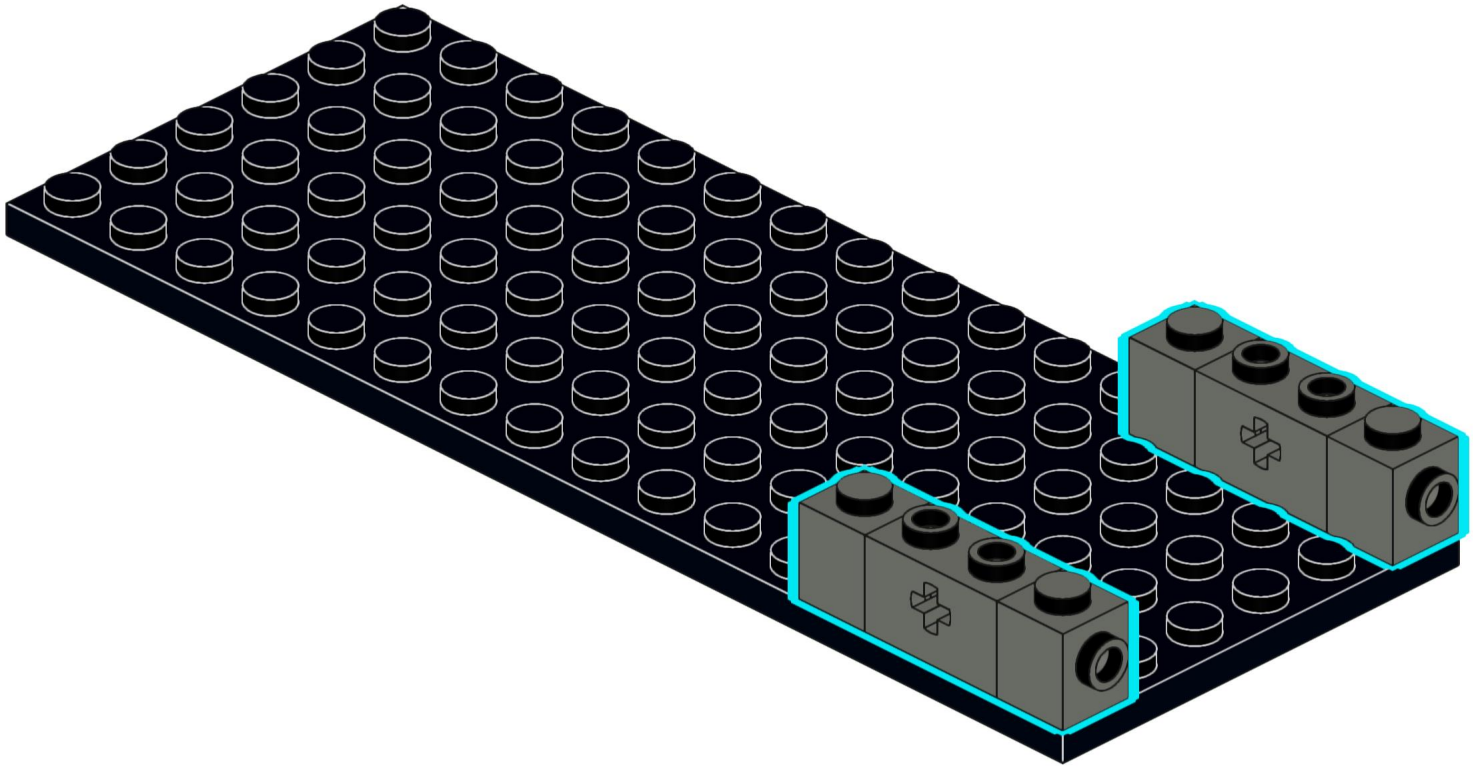

4

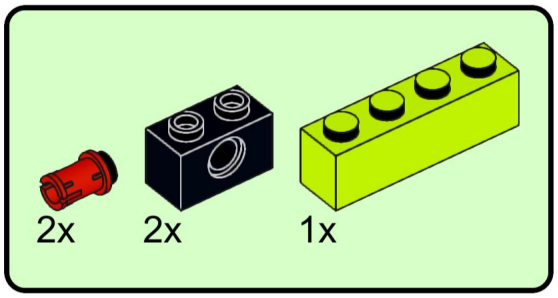

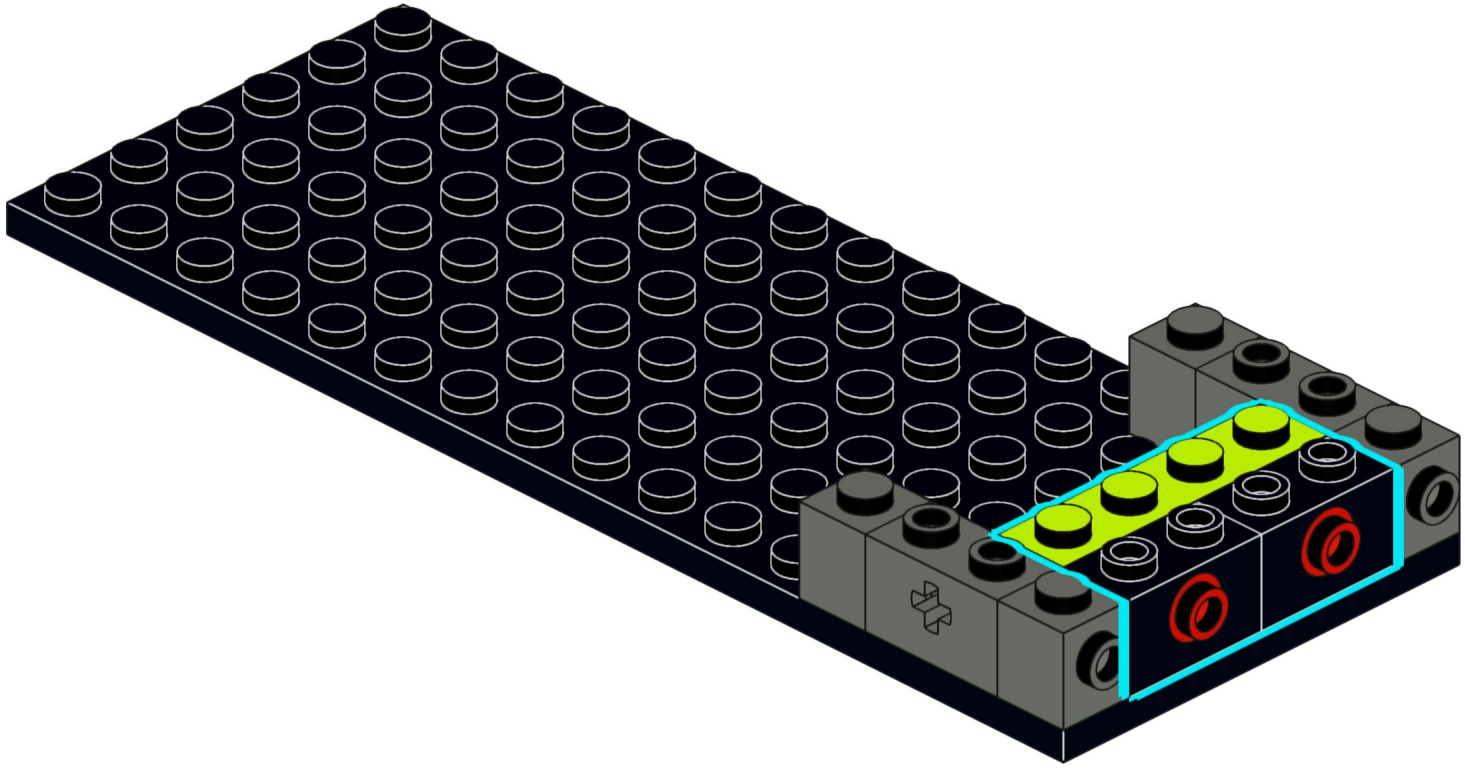

5

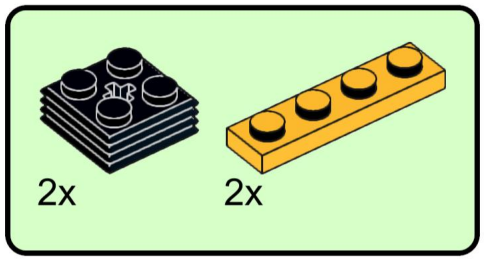

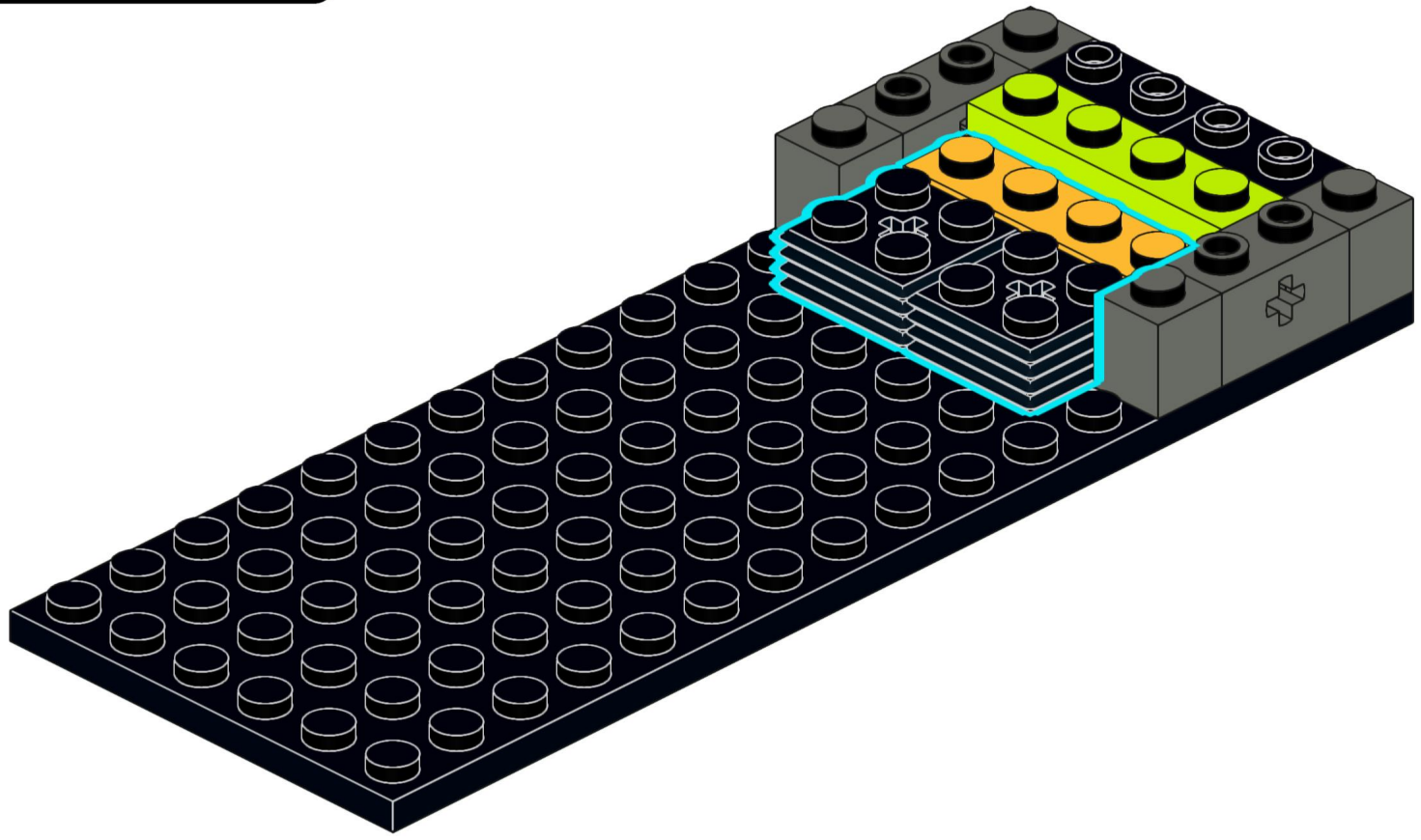

6

4x

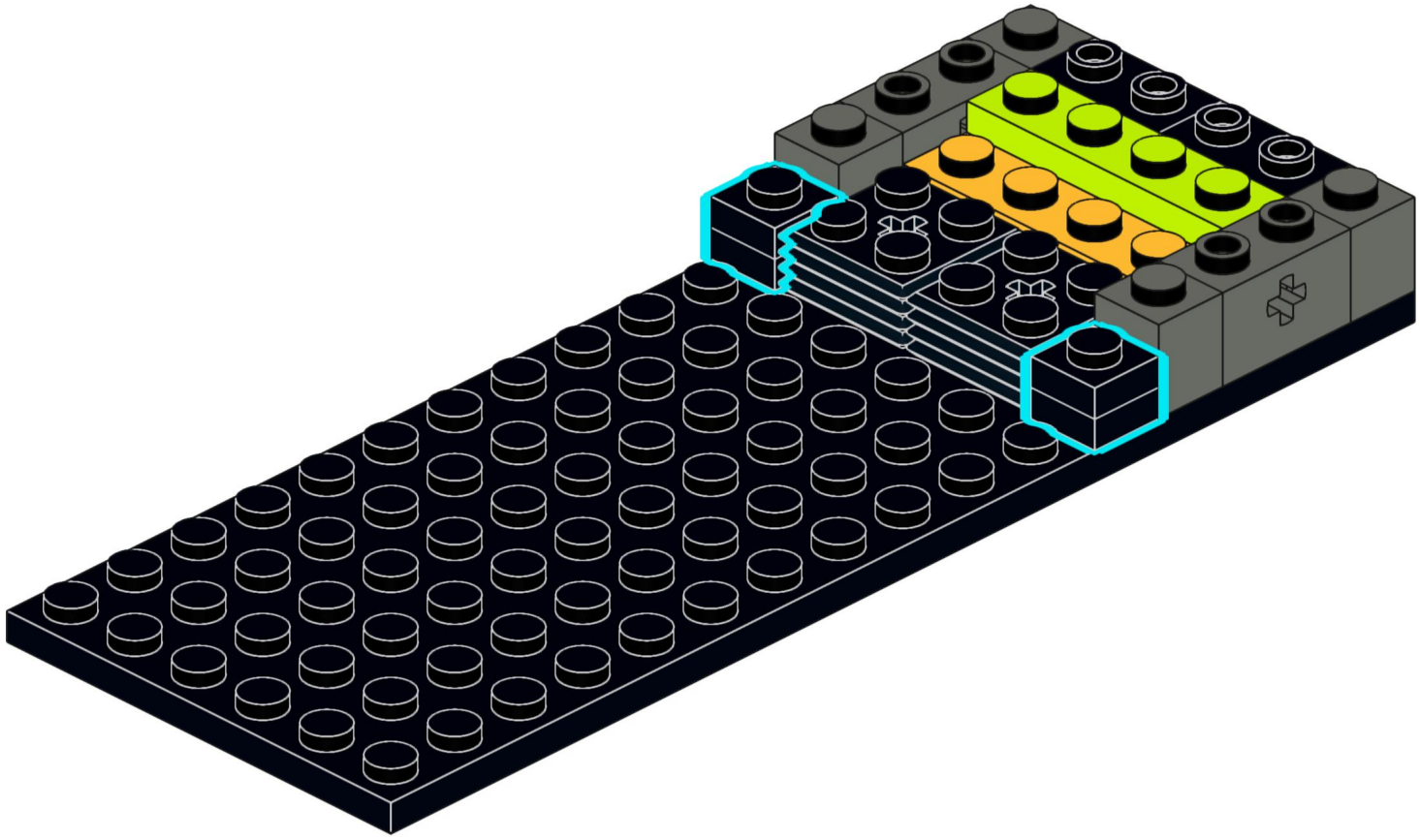

7

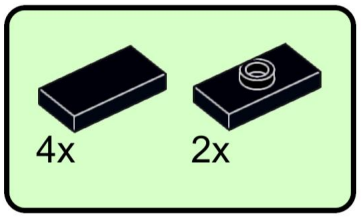

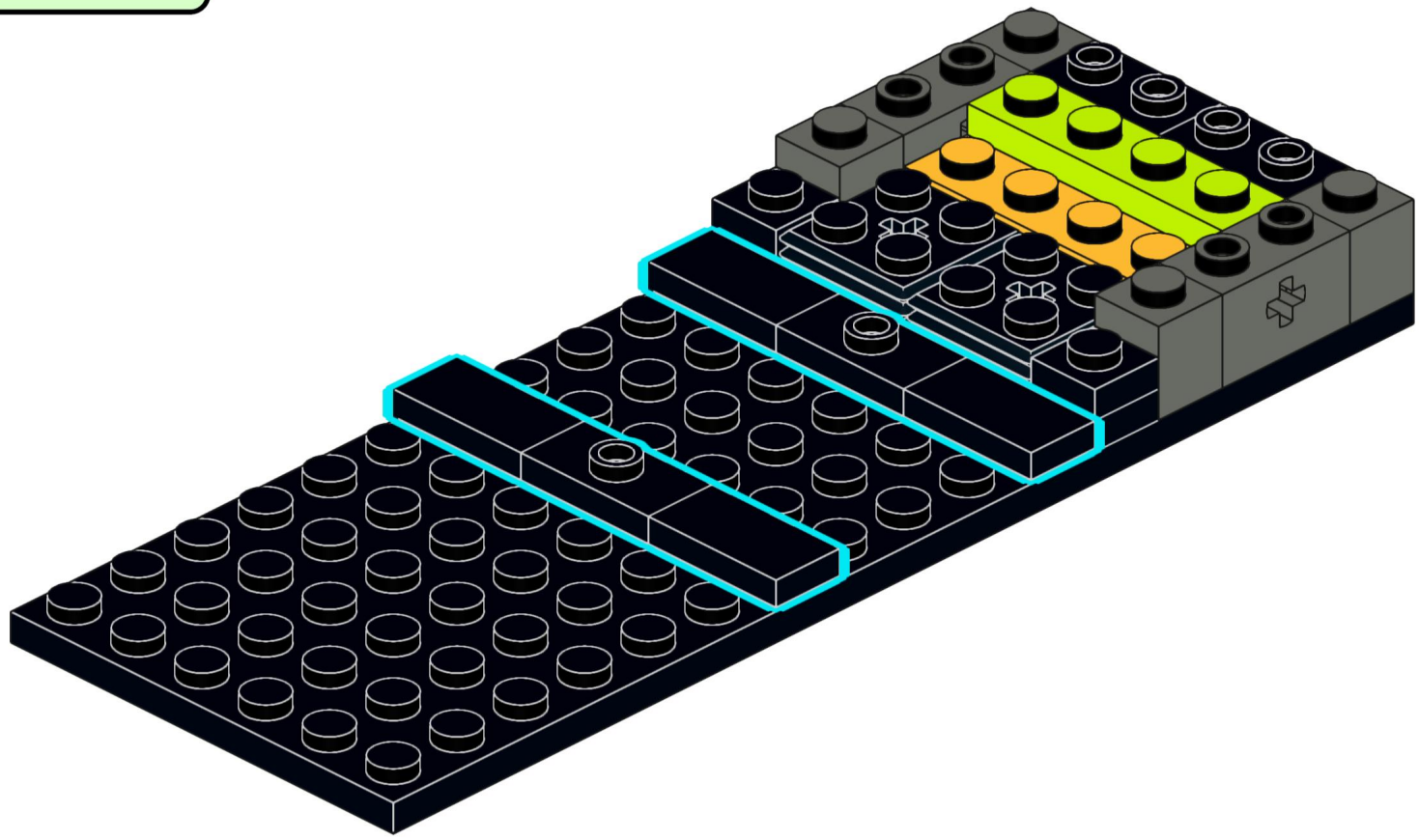

8

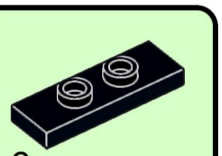

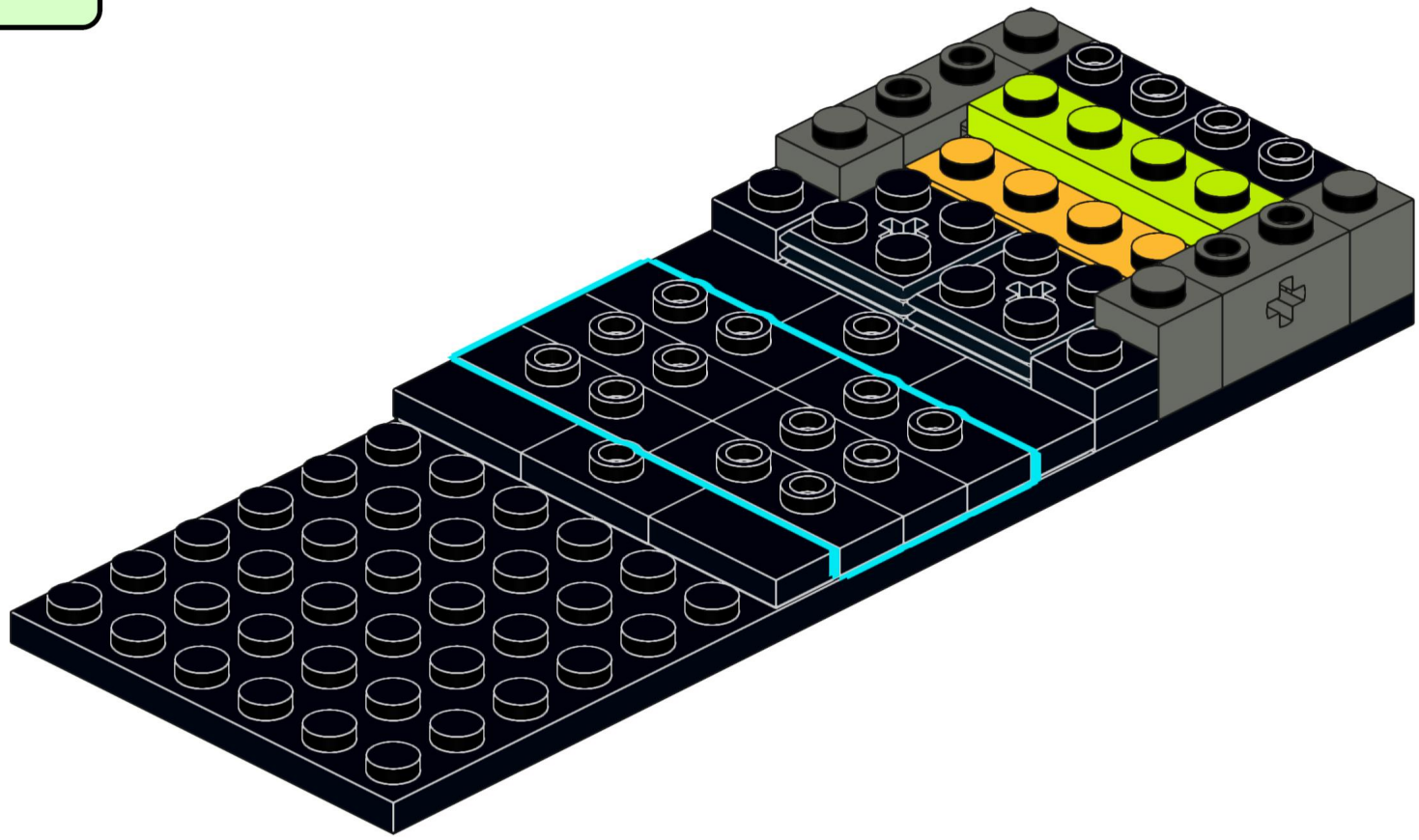

9

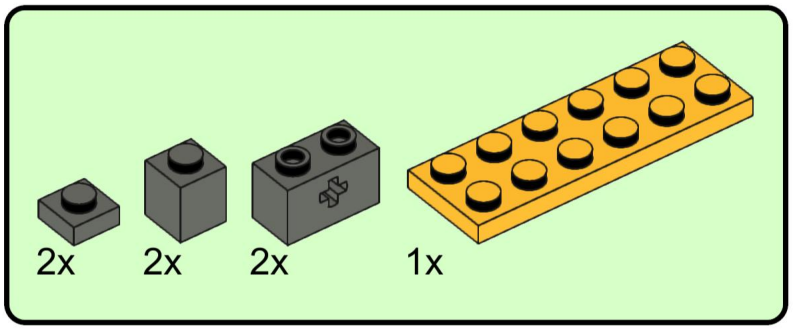

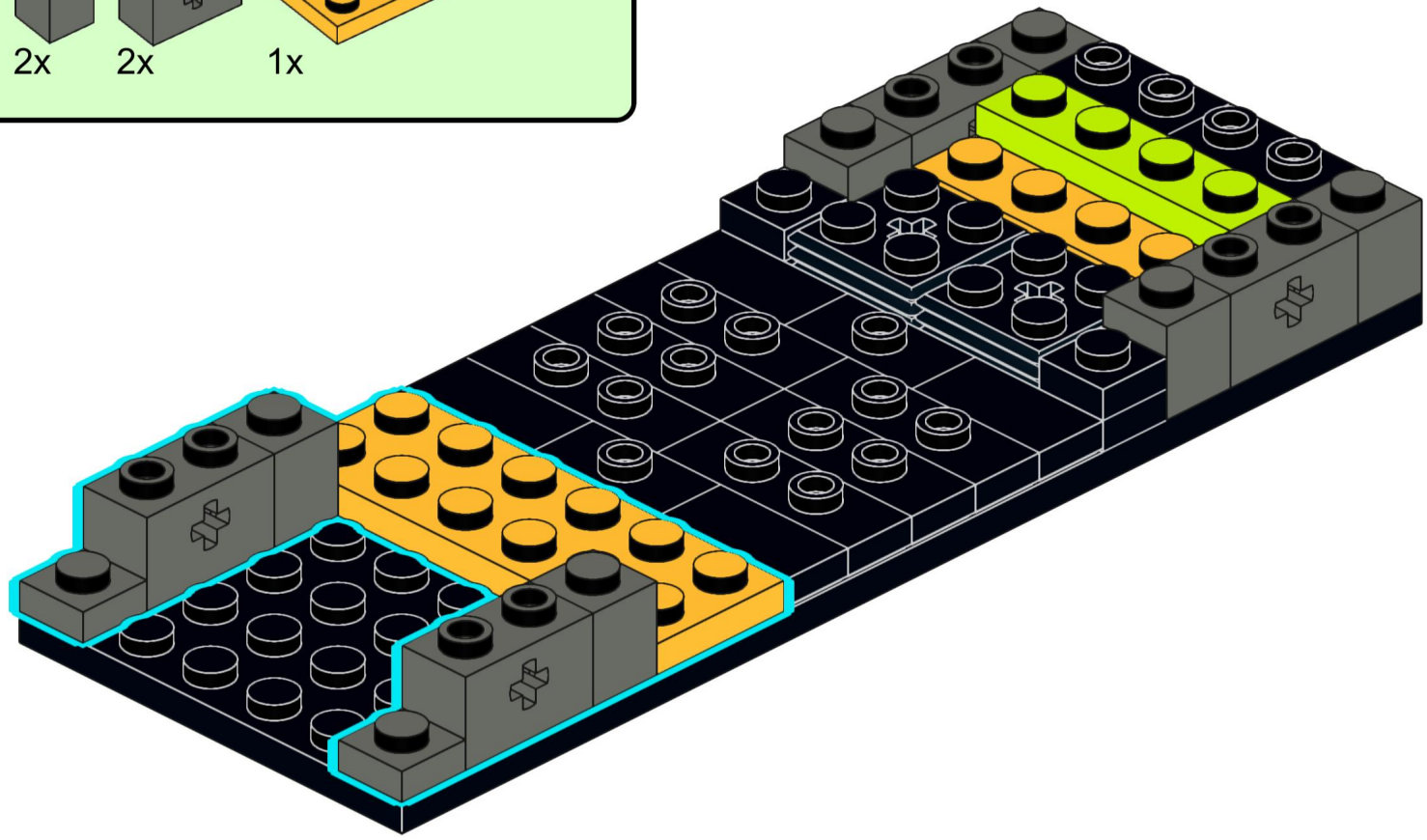

10

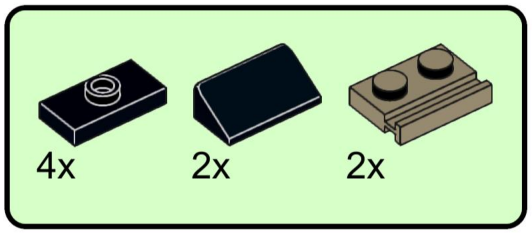

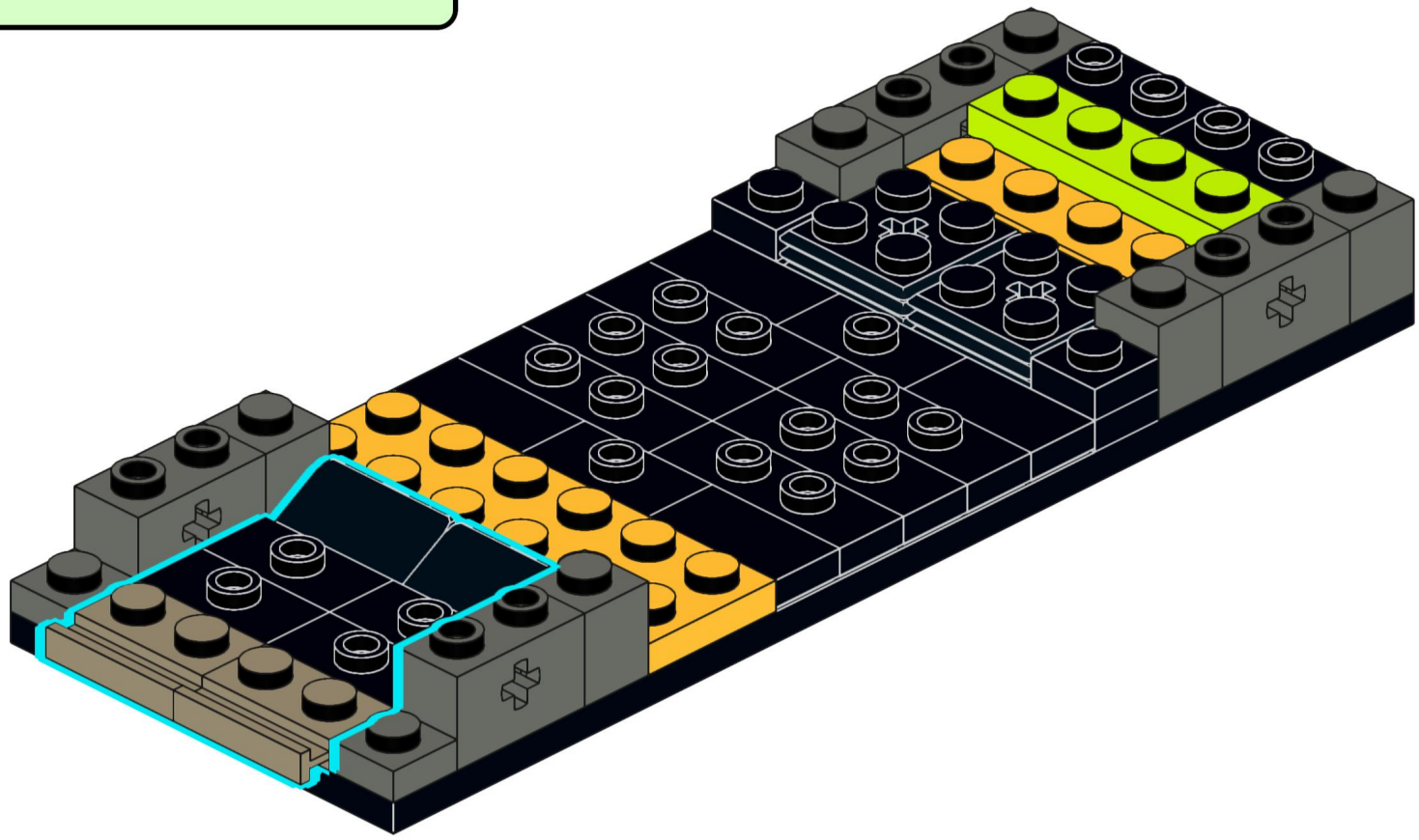

11

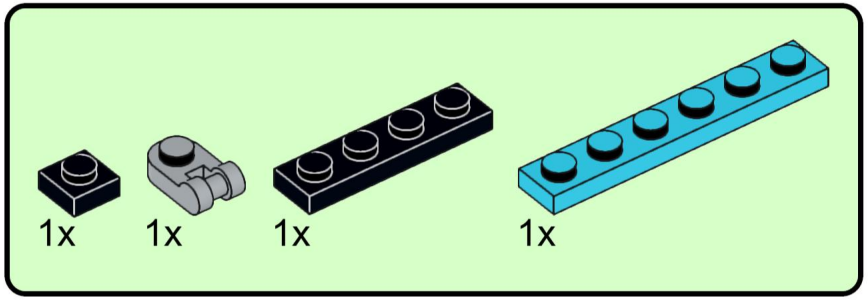

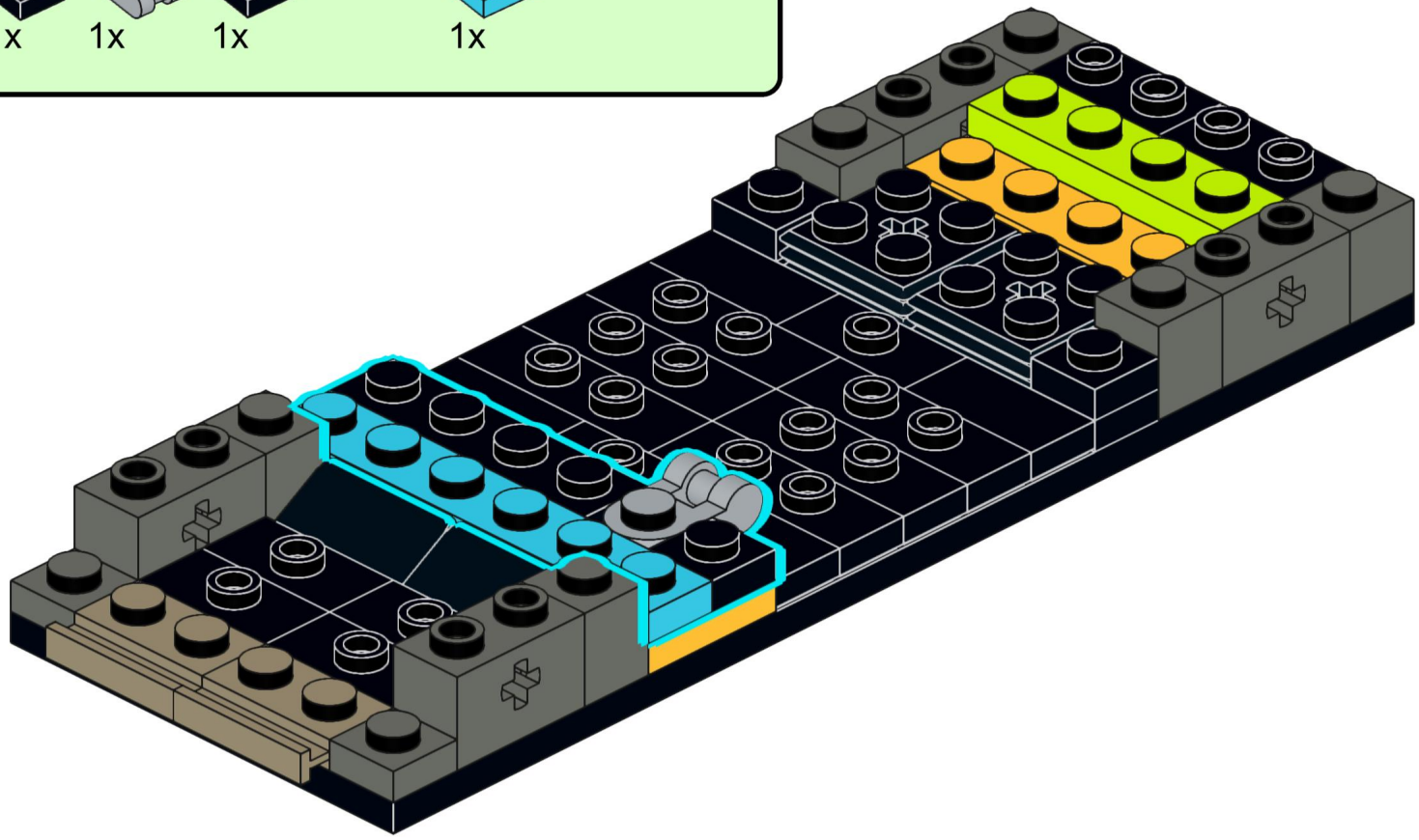

12

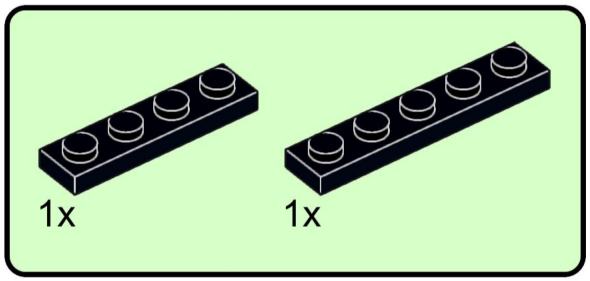

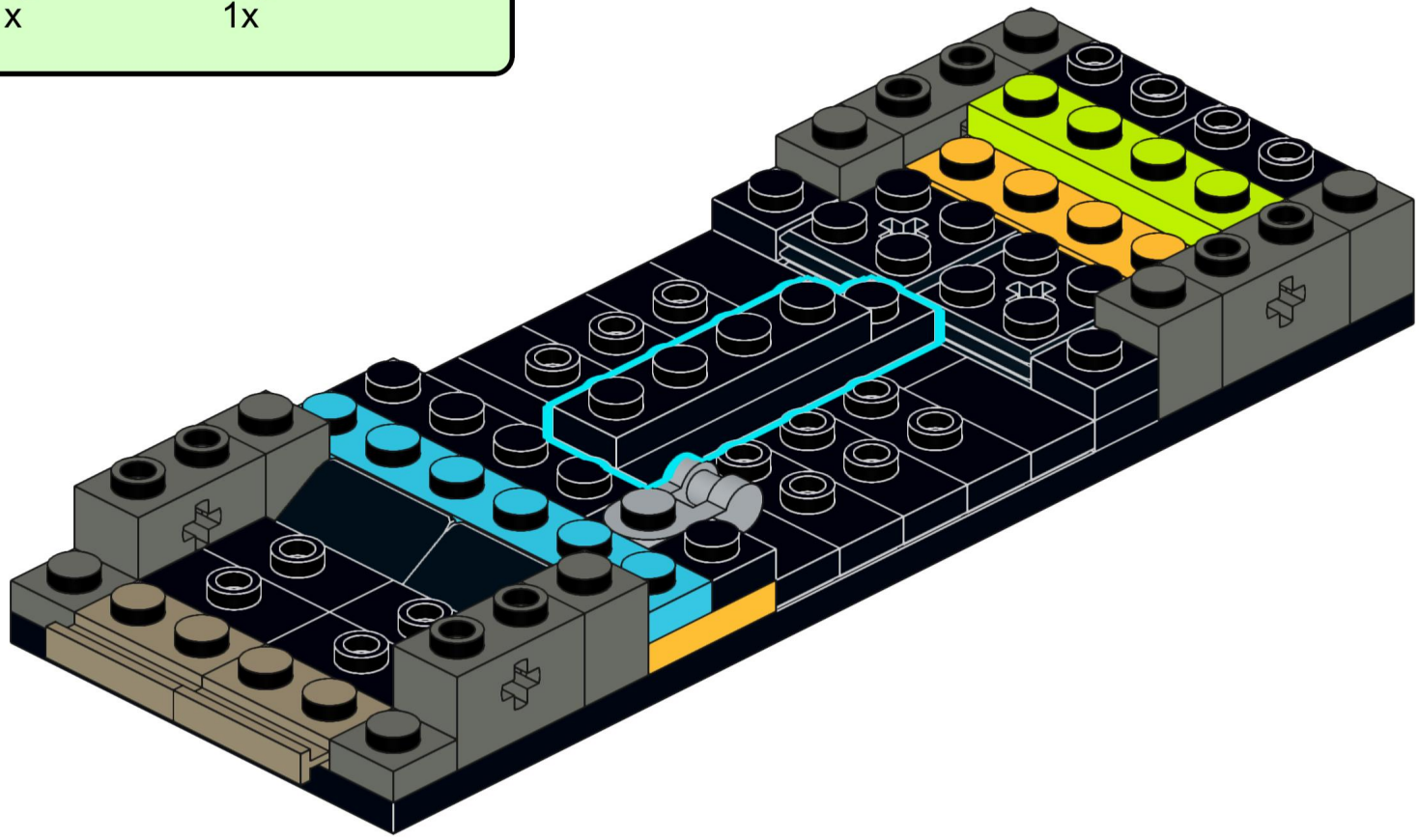

13

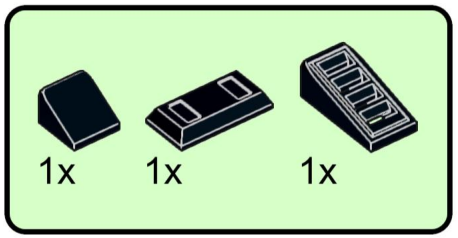

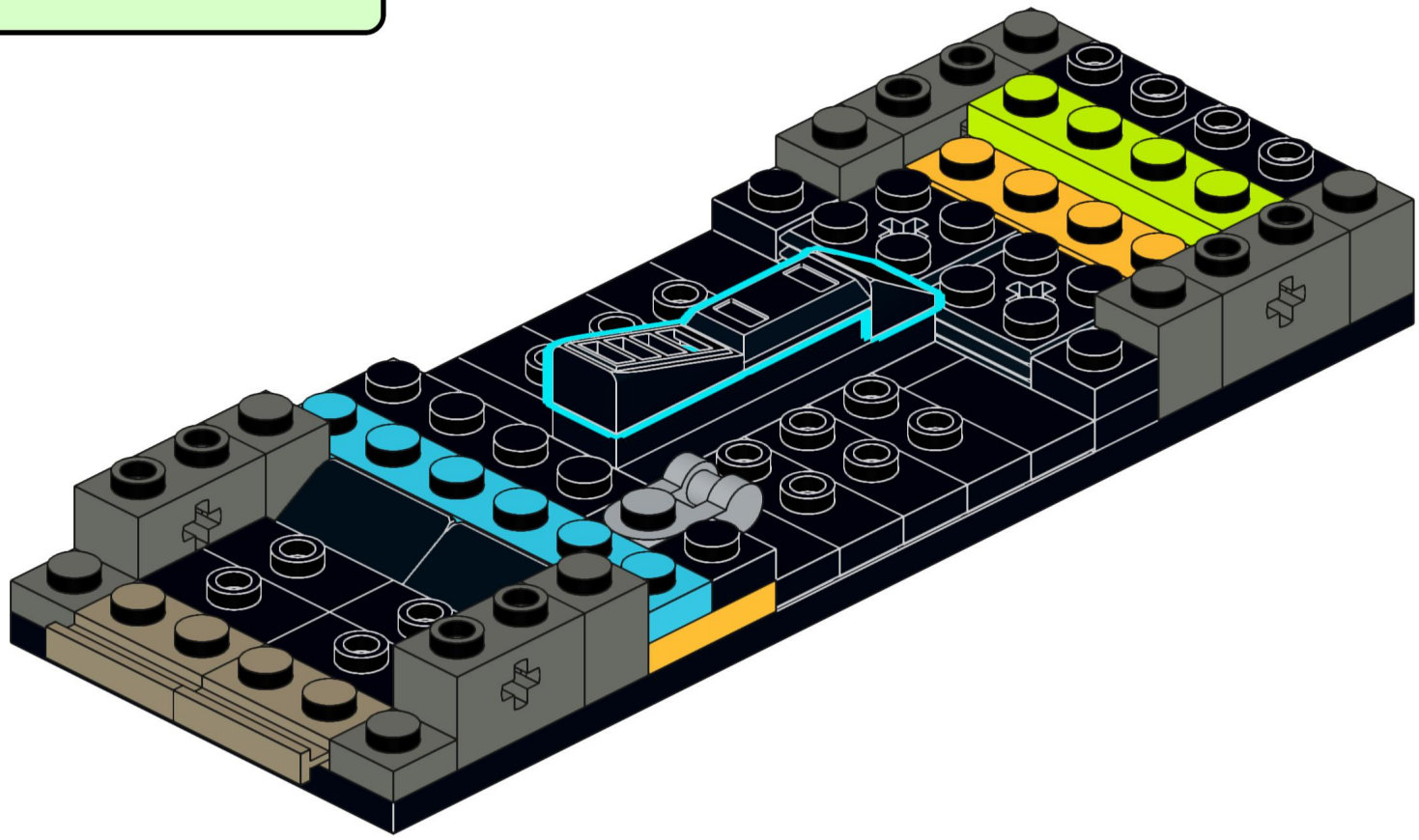

14

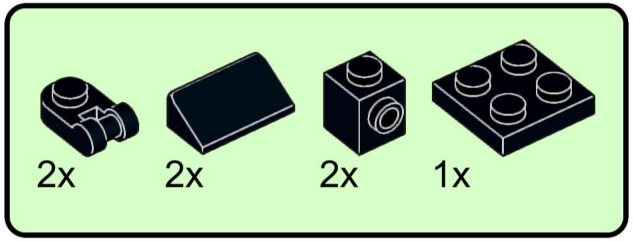

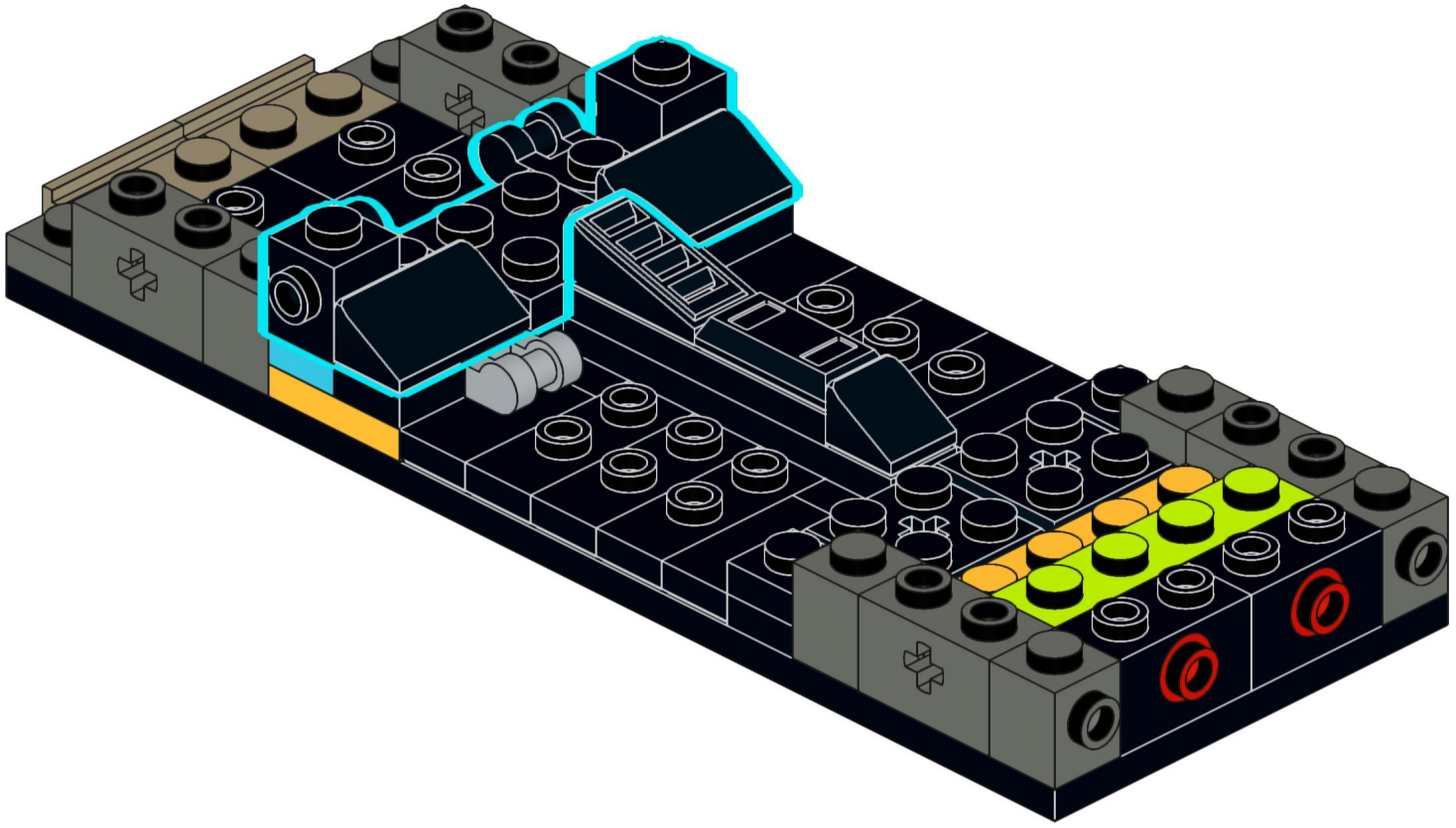

15

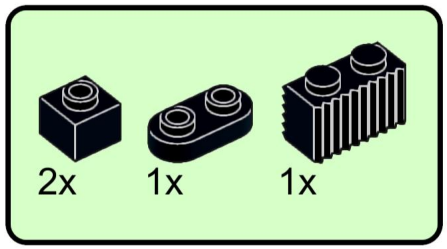

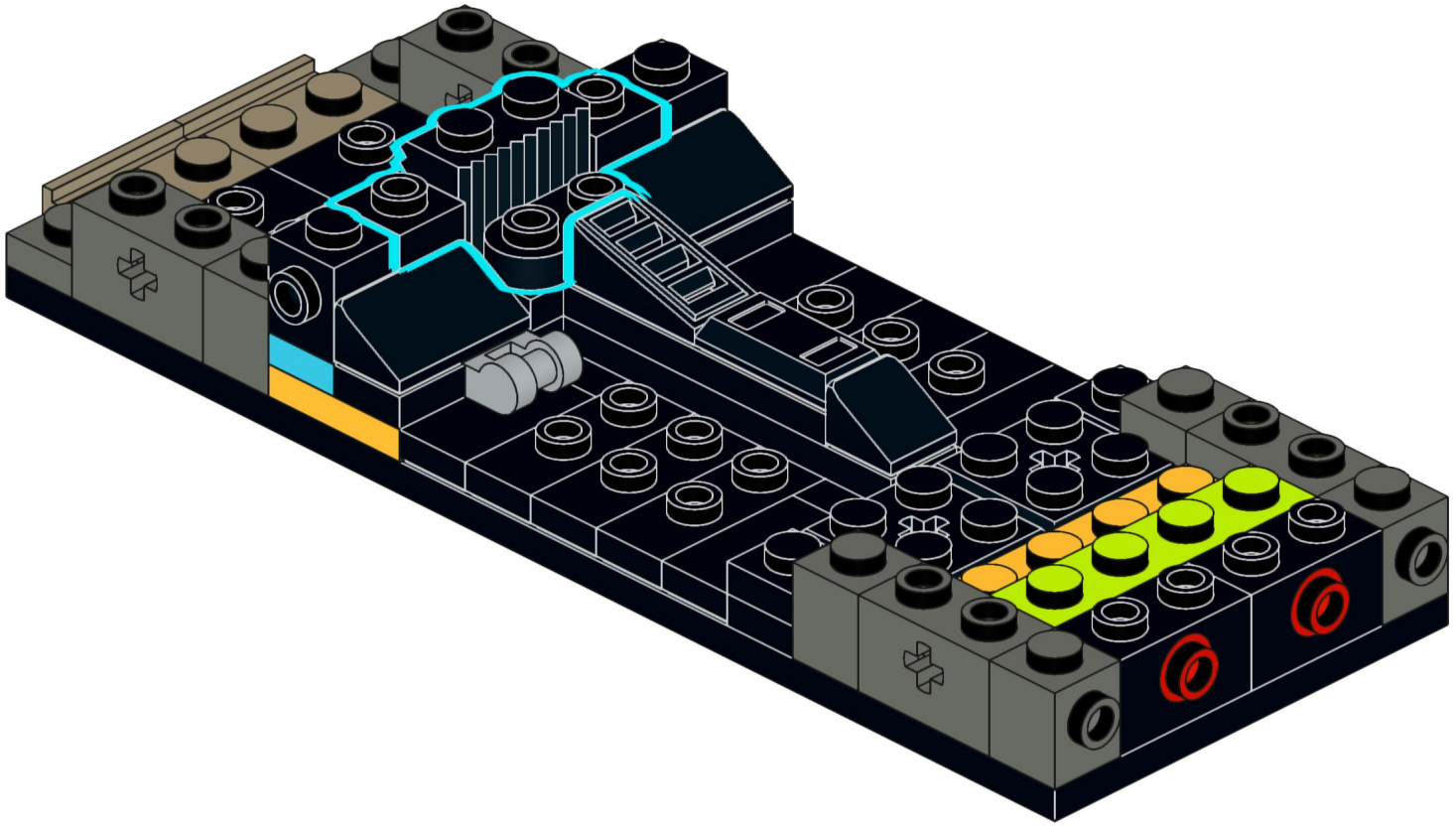

16

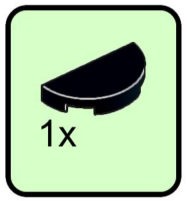

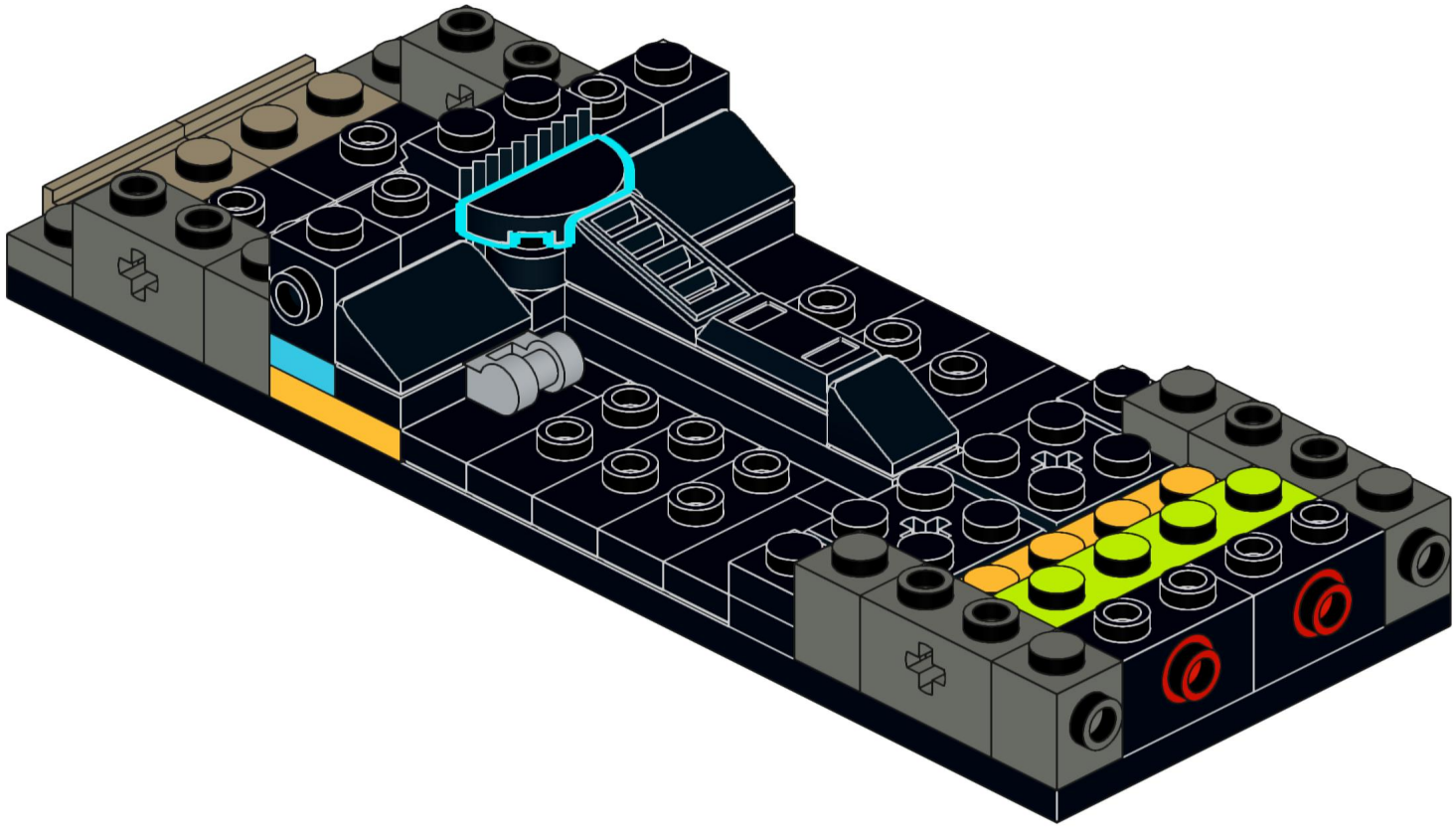

17

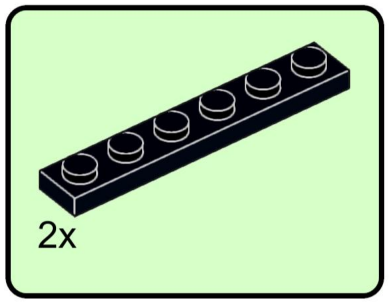

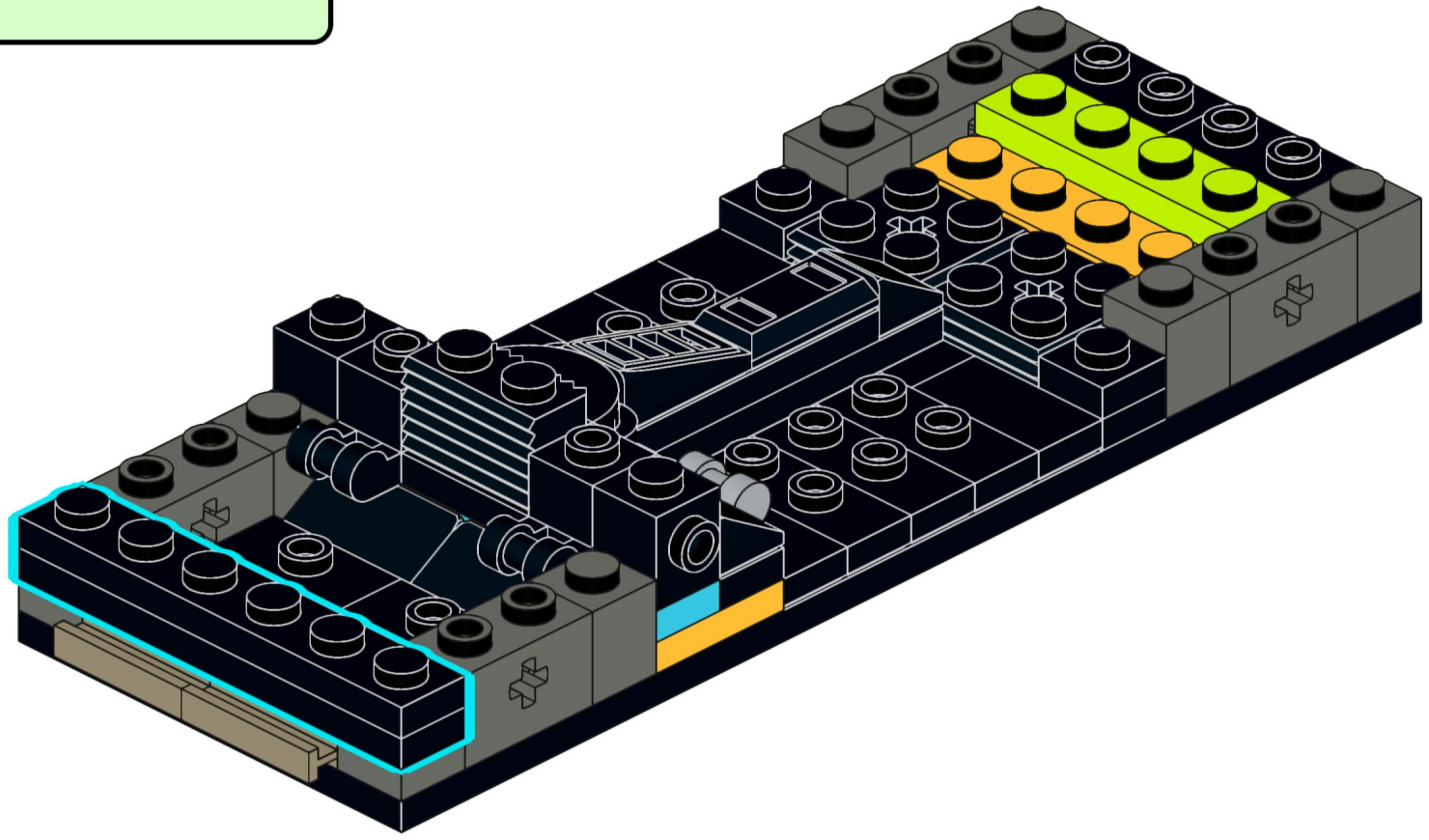

18

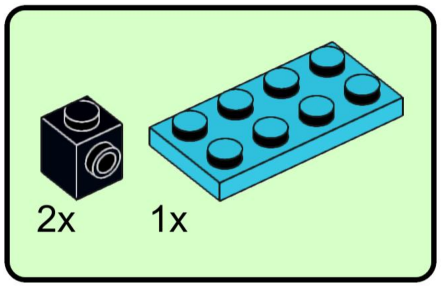

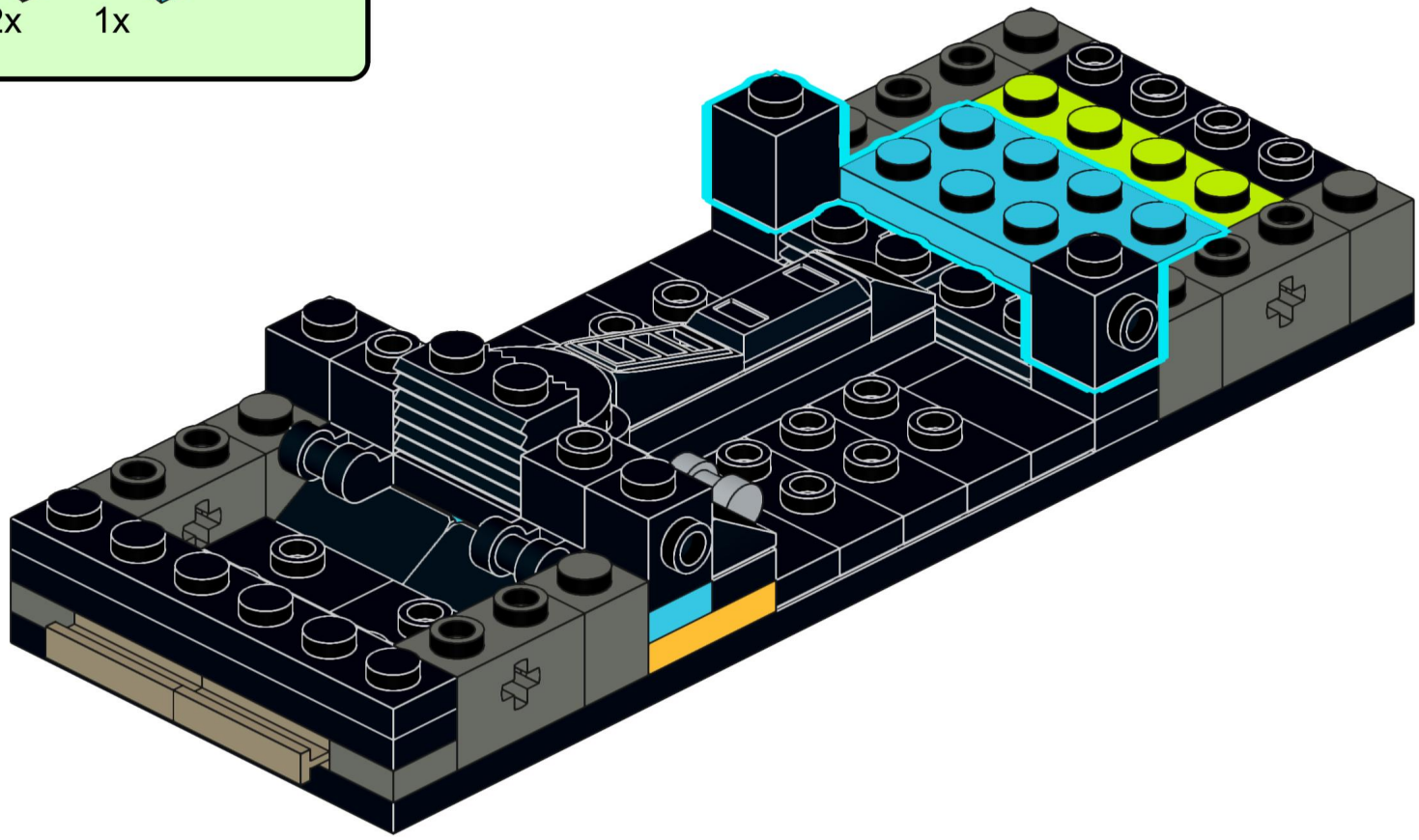

19

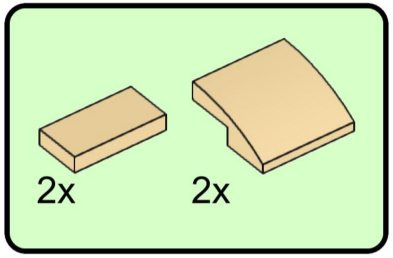

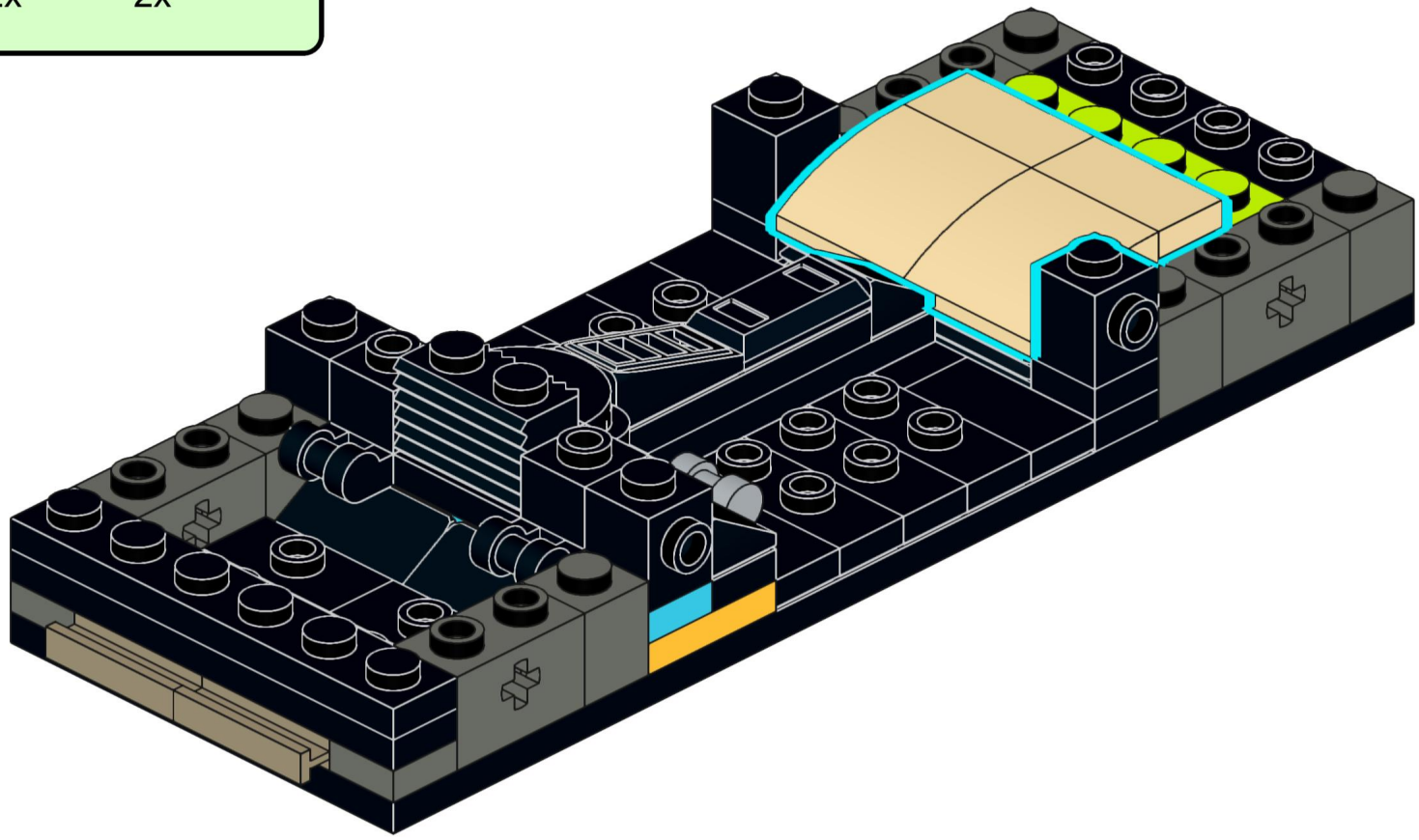

20

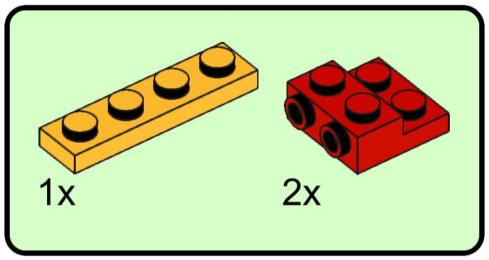

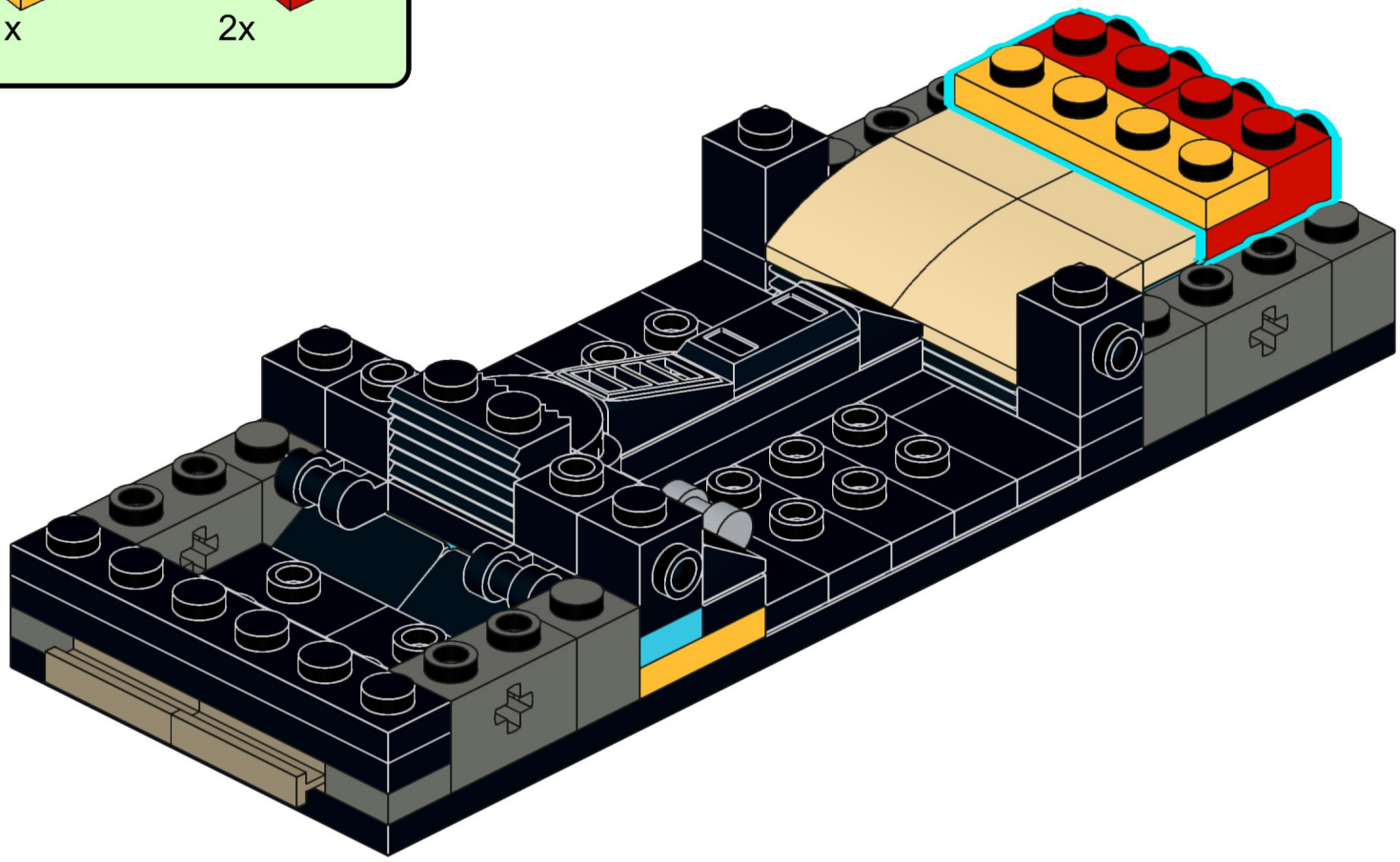

21

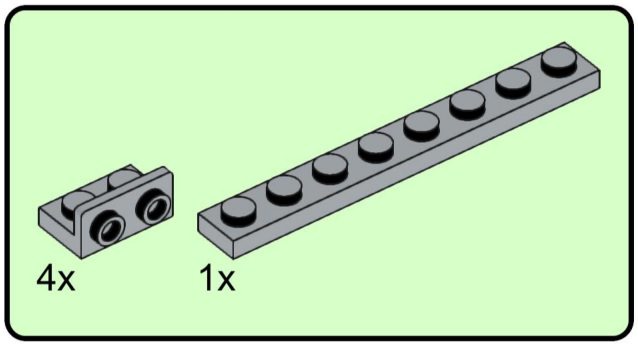

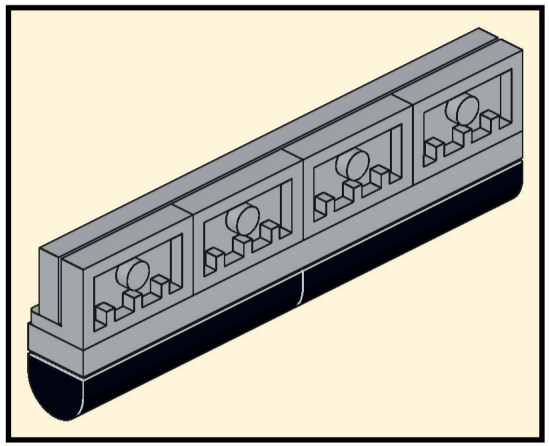

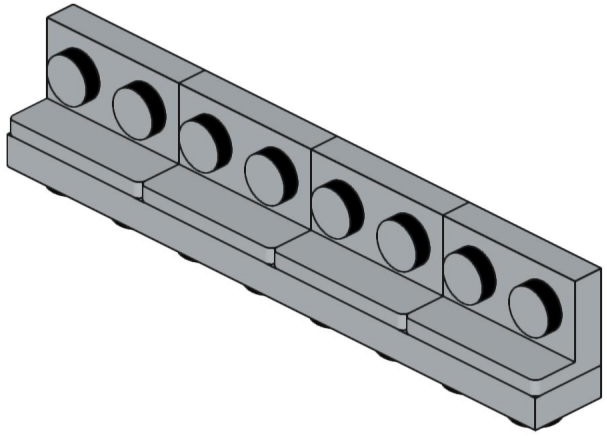

22

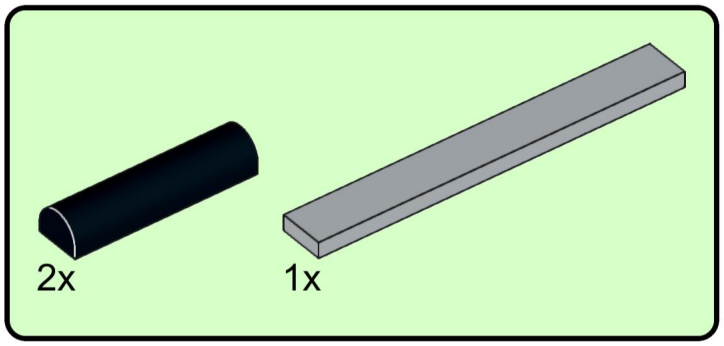

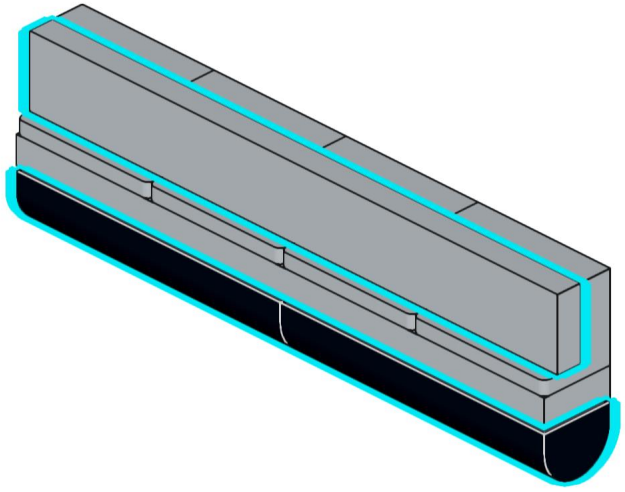

23

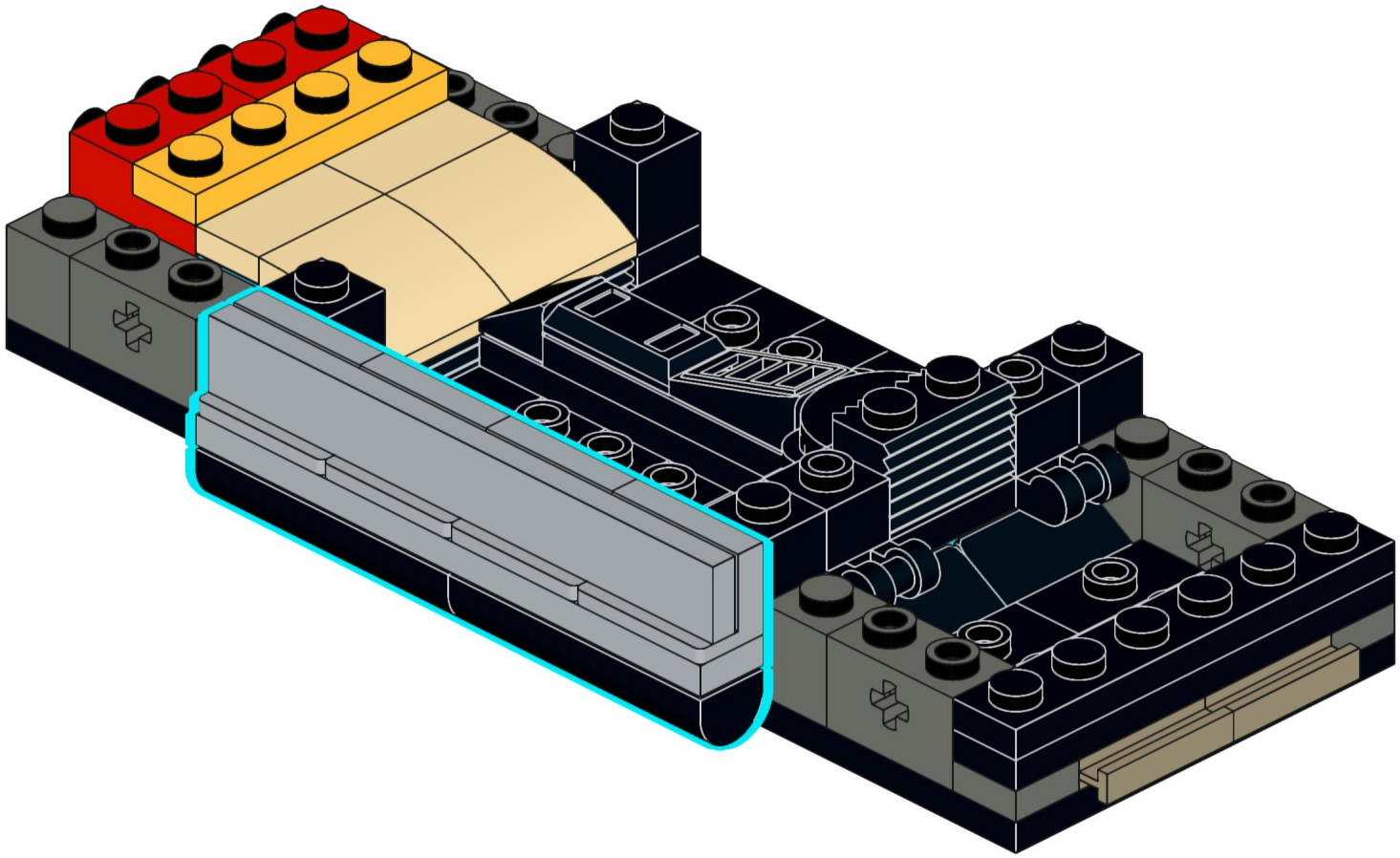

24

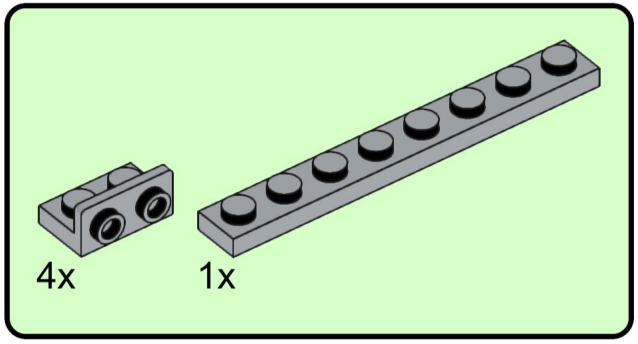

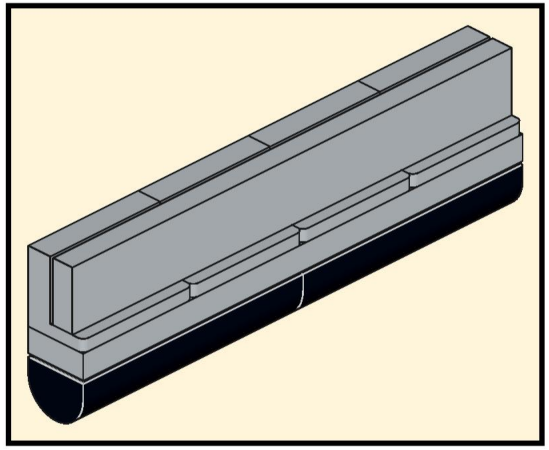

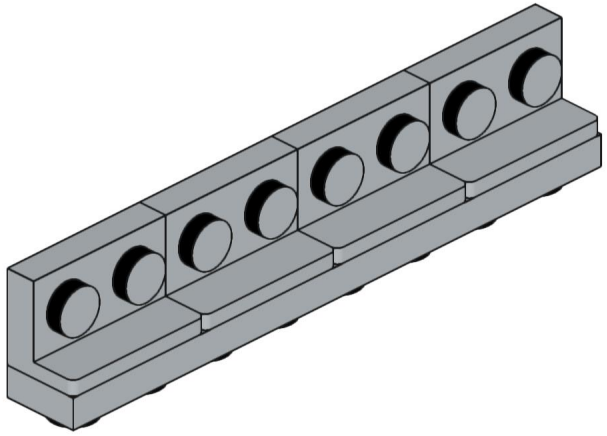

25

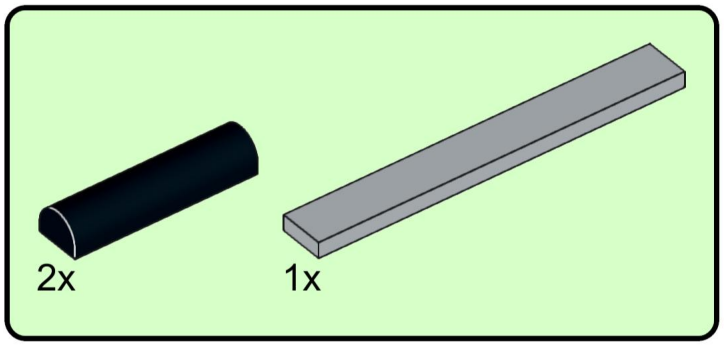

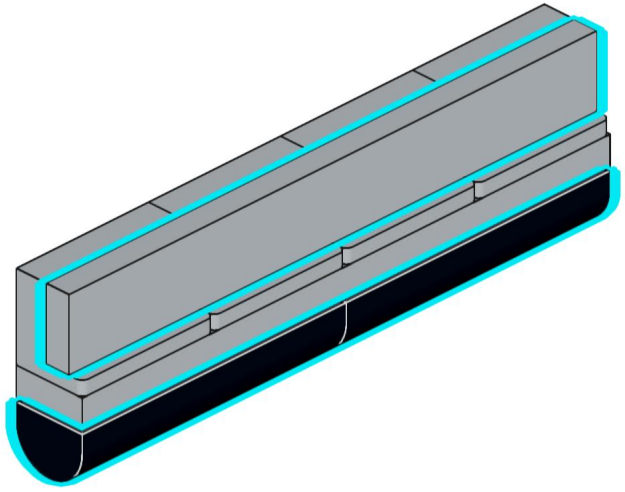

26

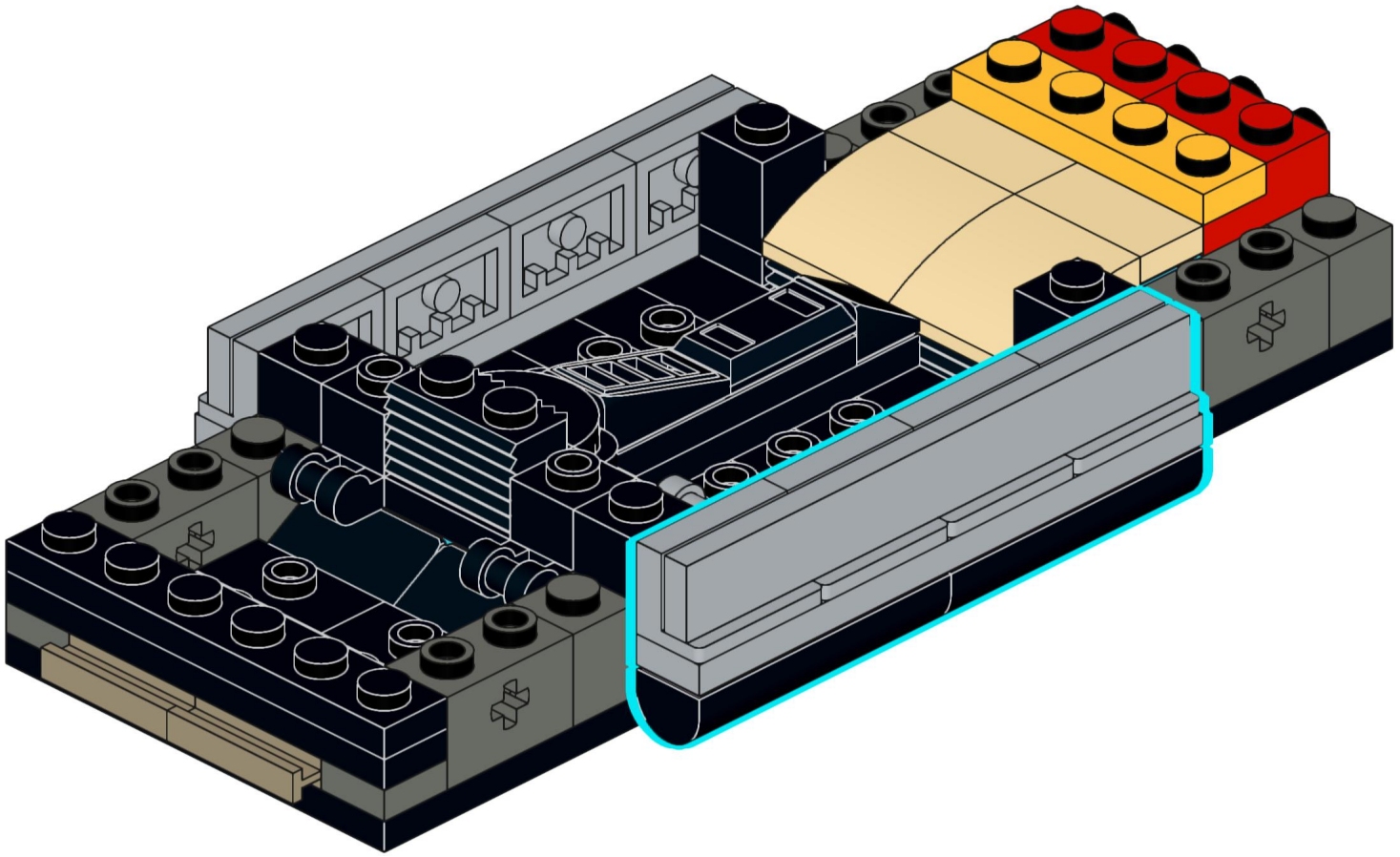

27

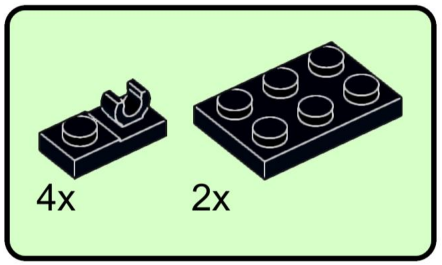

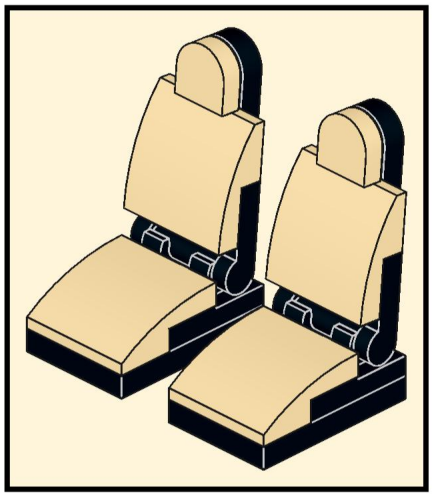

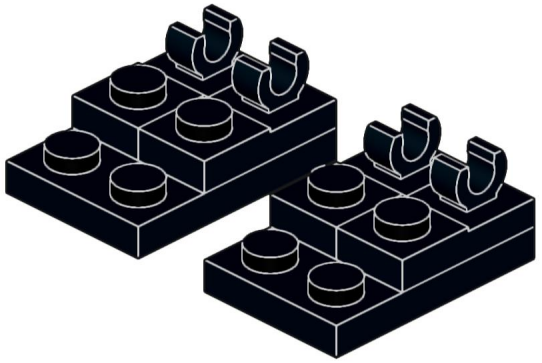

28

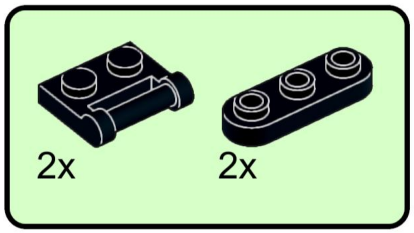

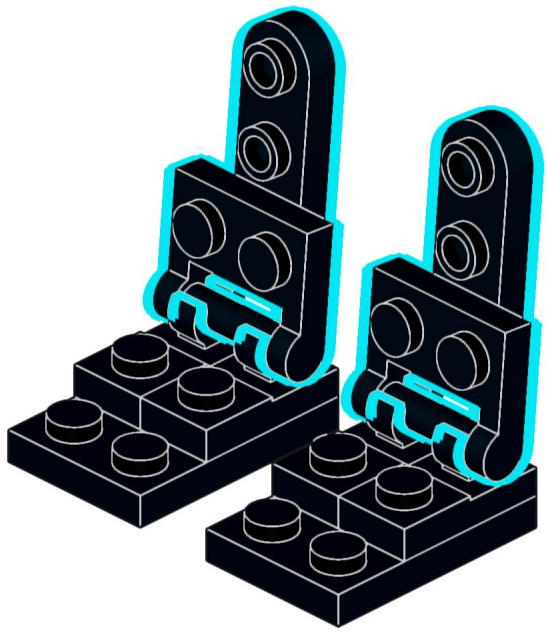

29

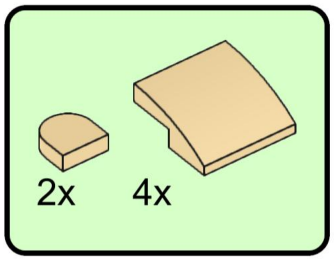



30

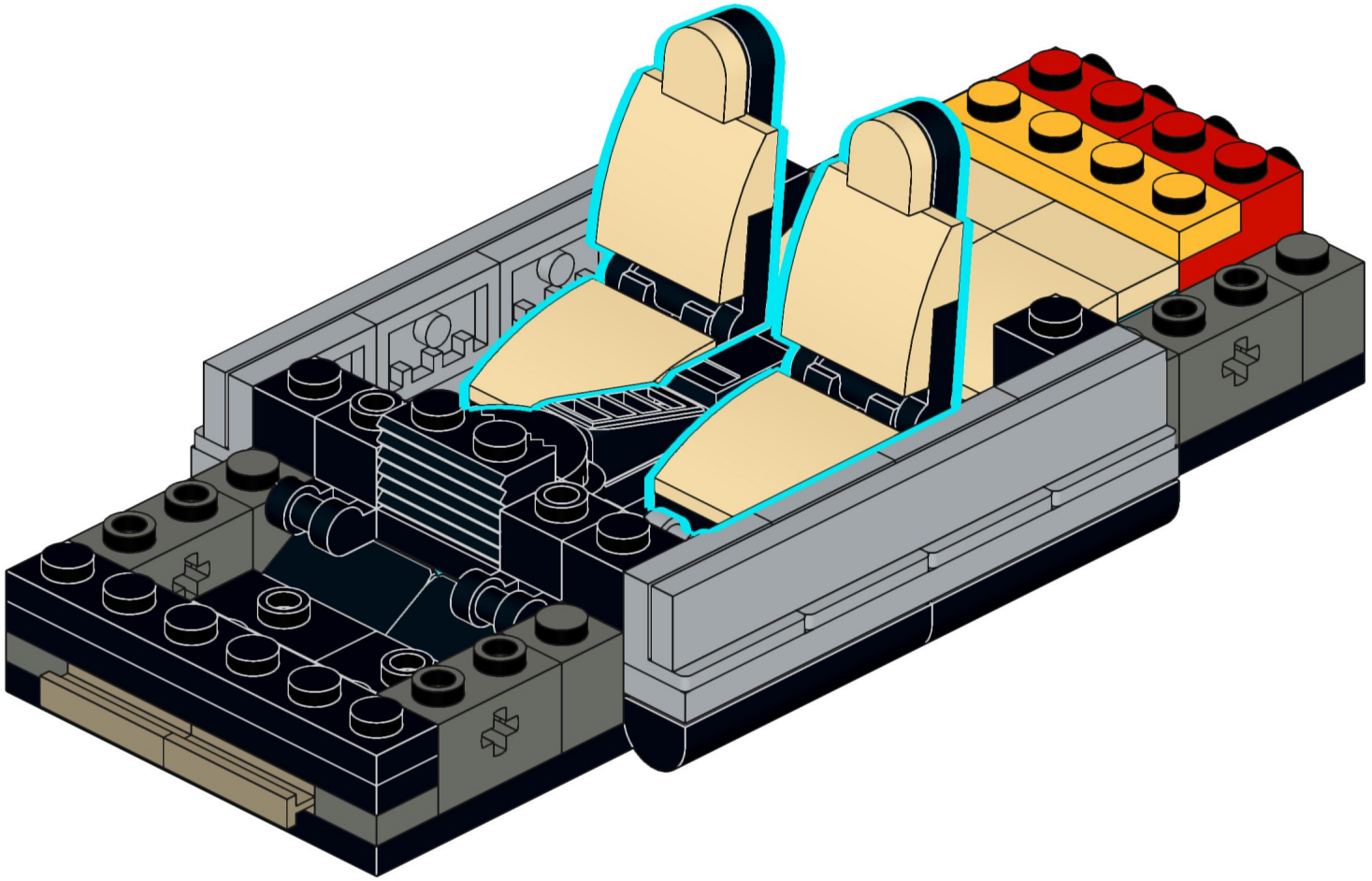

31

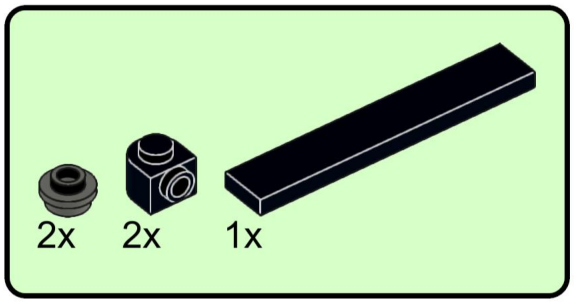

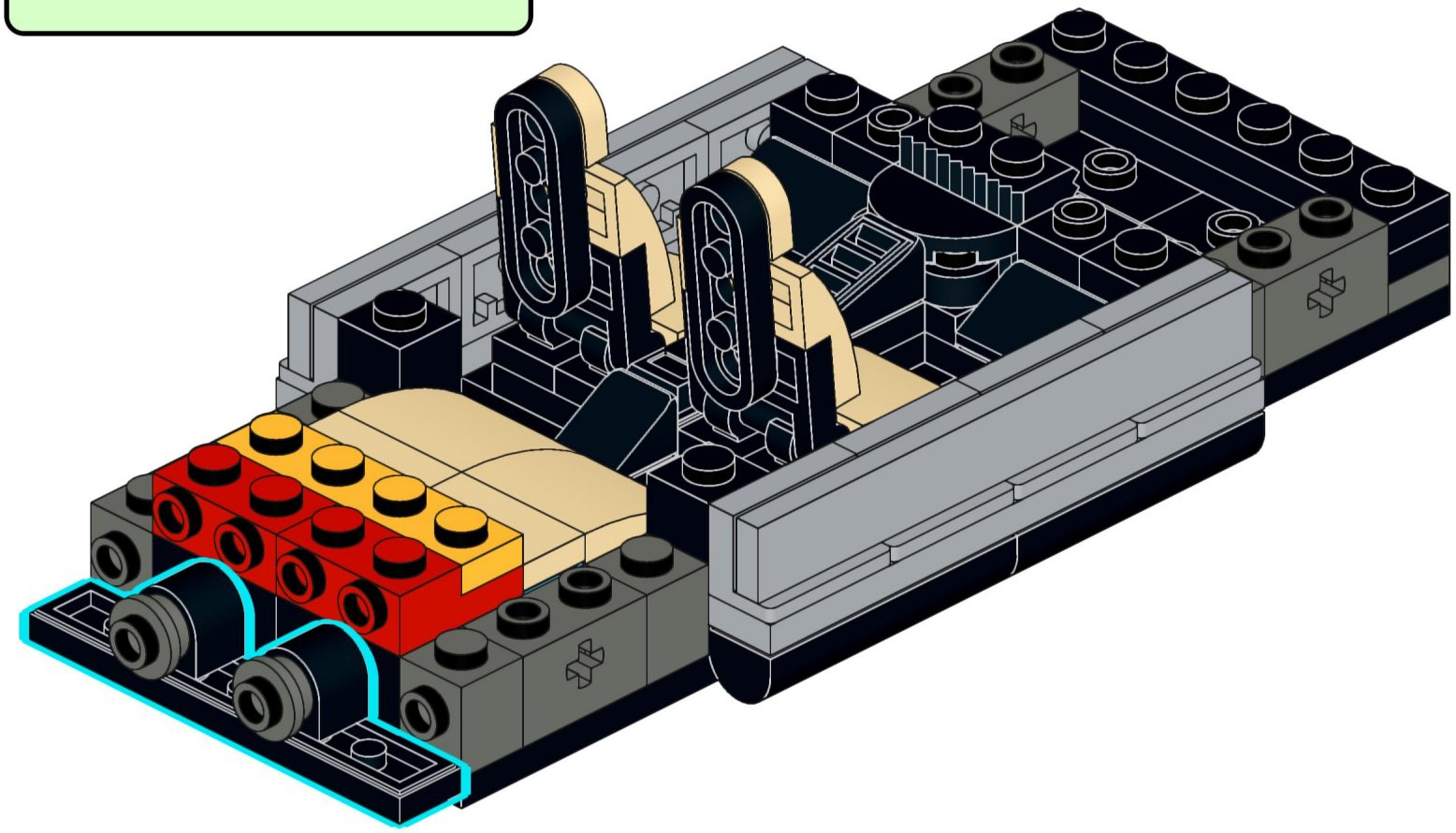

32



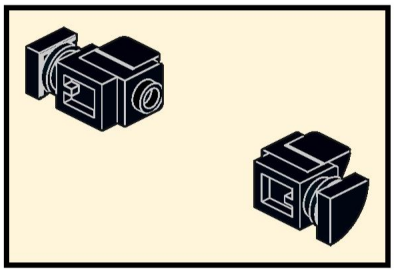





33

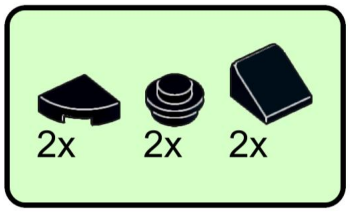

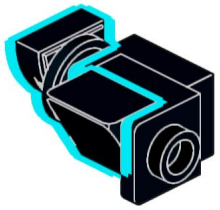

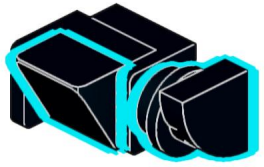

34

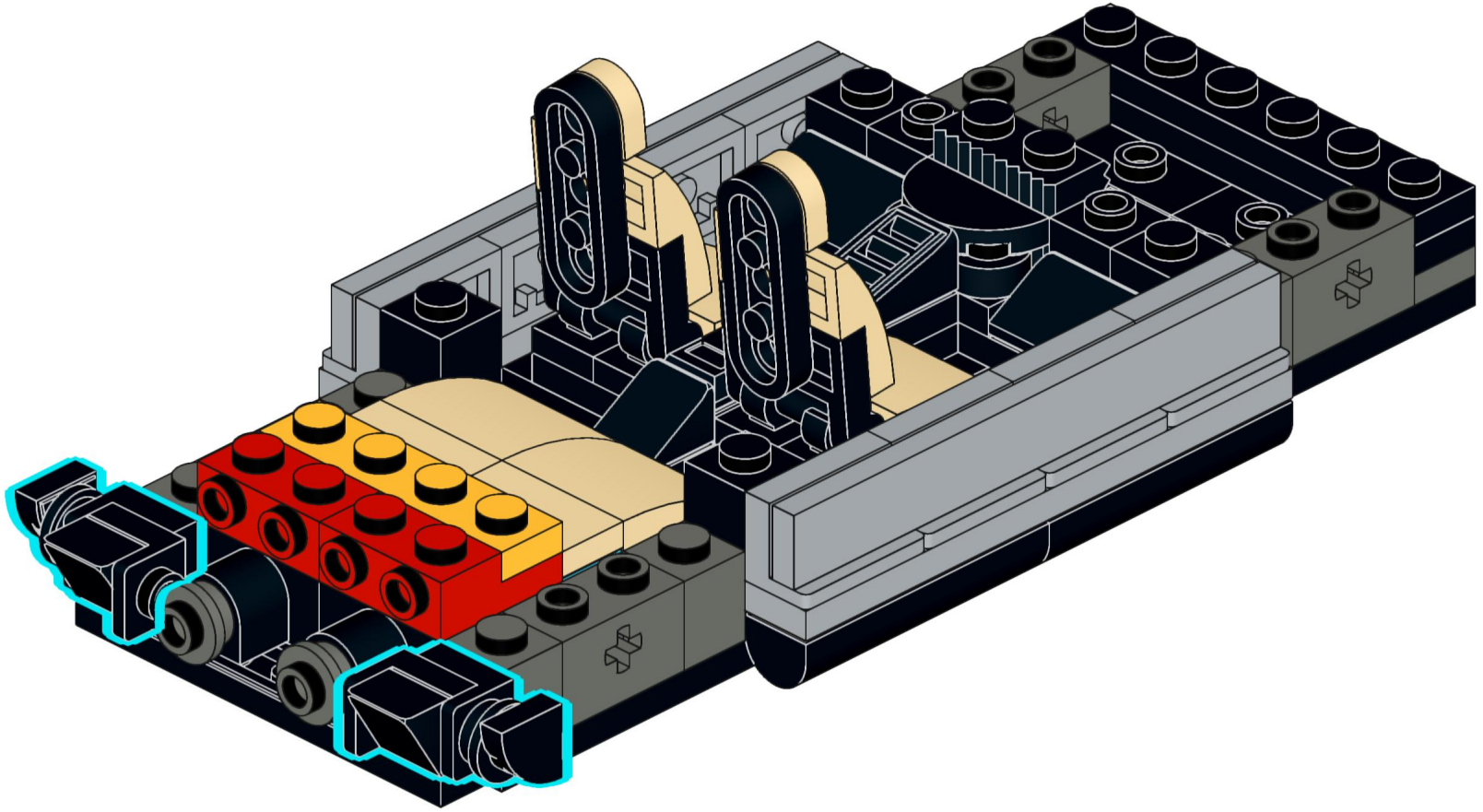

35

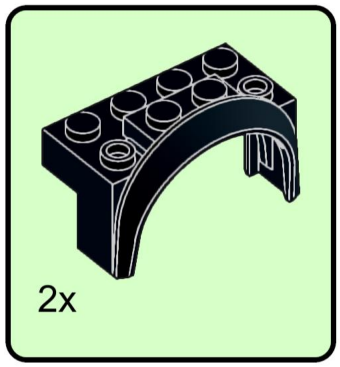

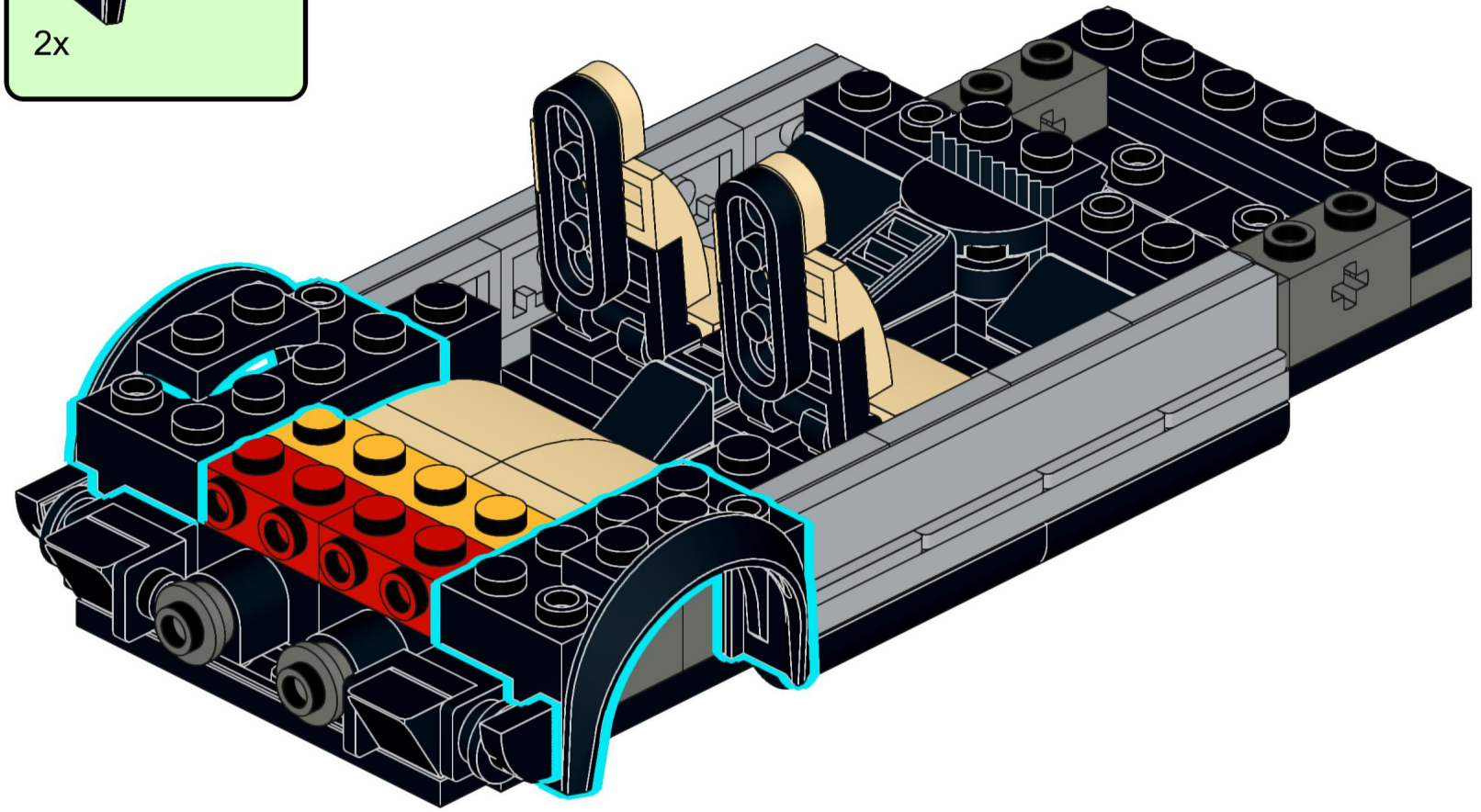

36

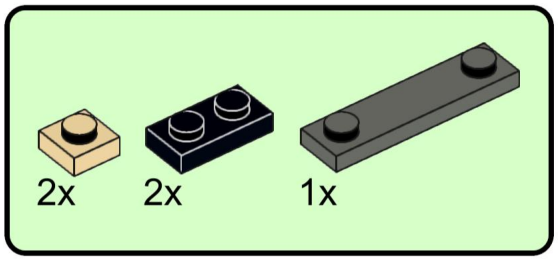

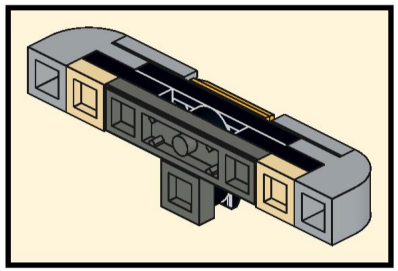

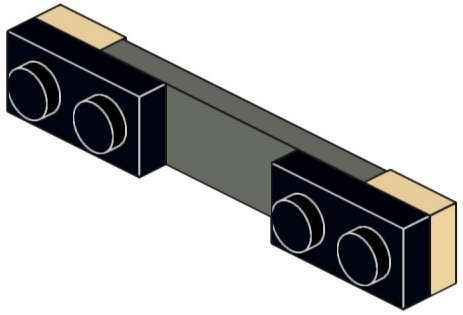

37

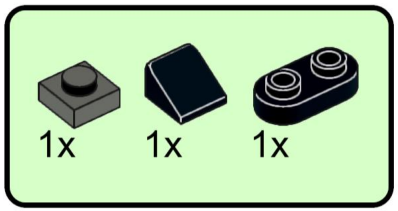

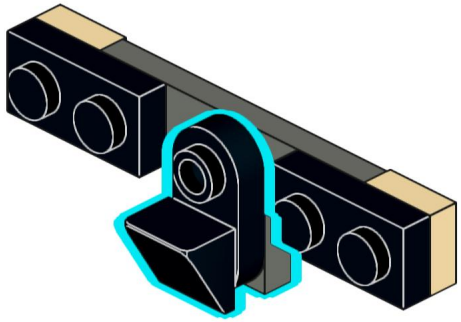

38

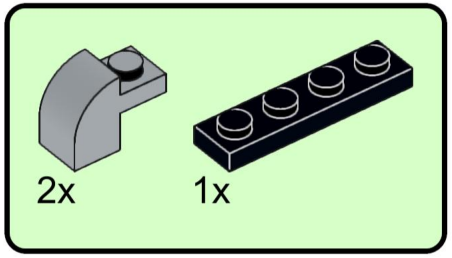

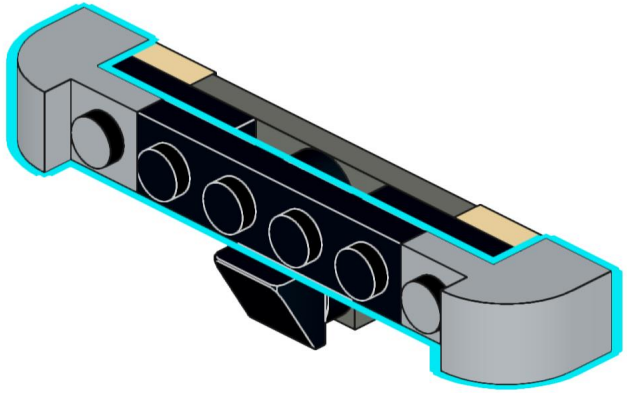

39

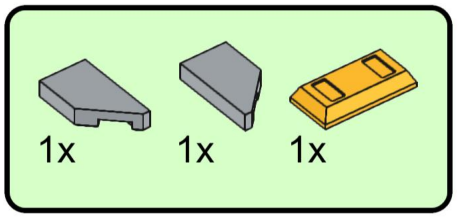

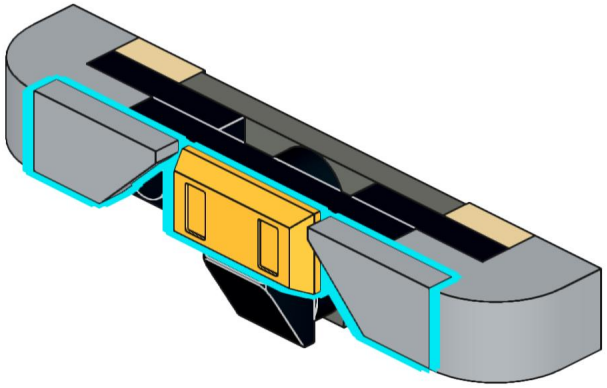

40

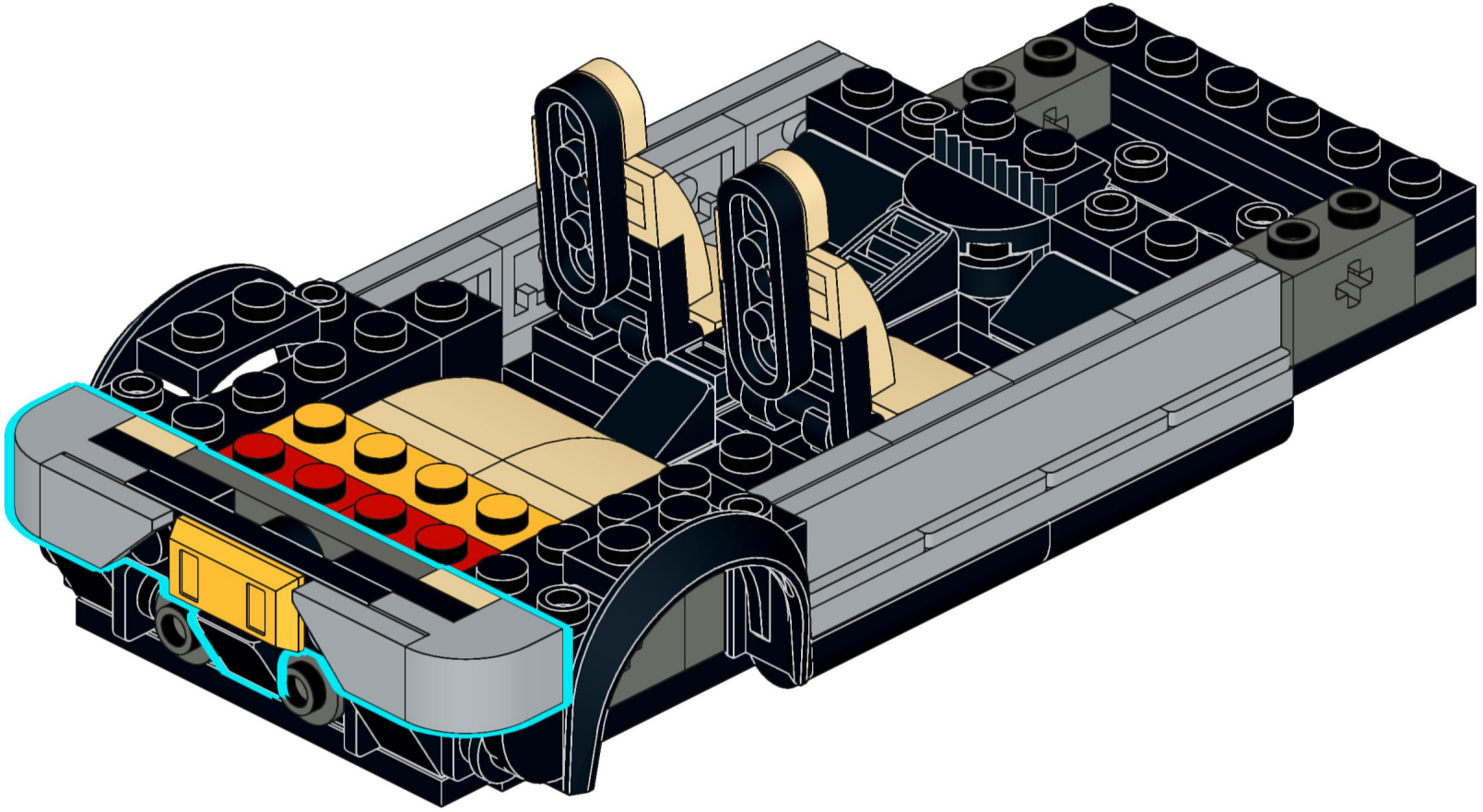

41

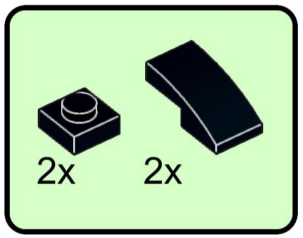

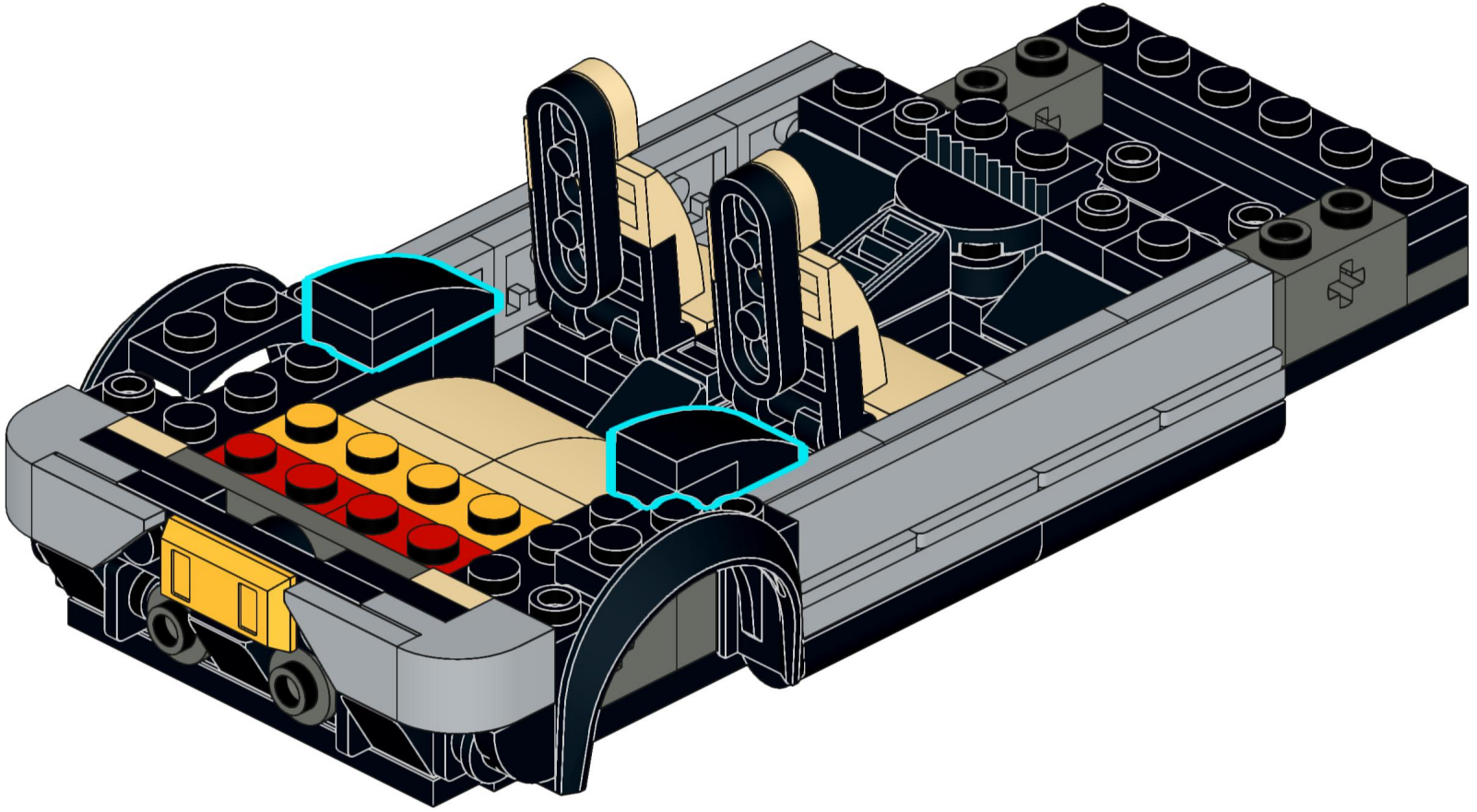

42

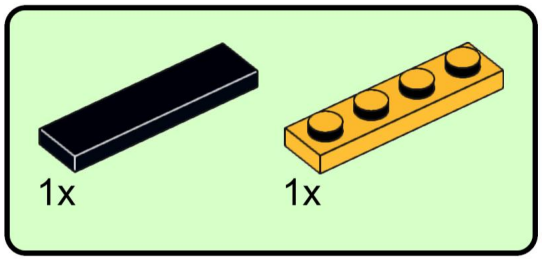

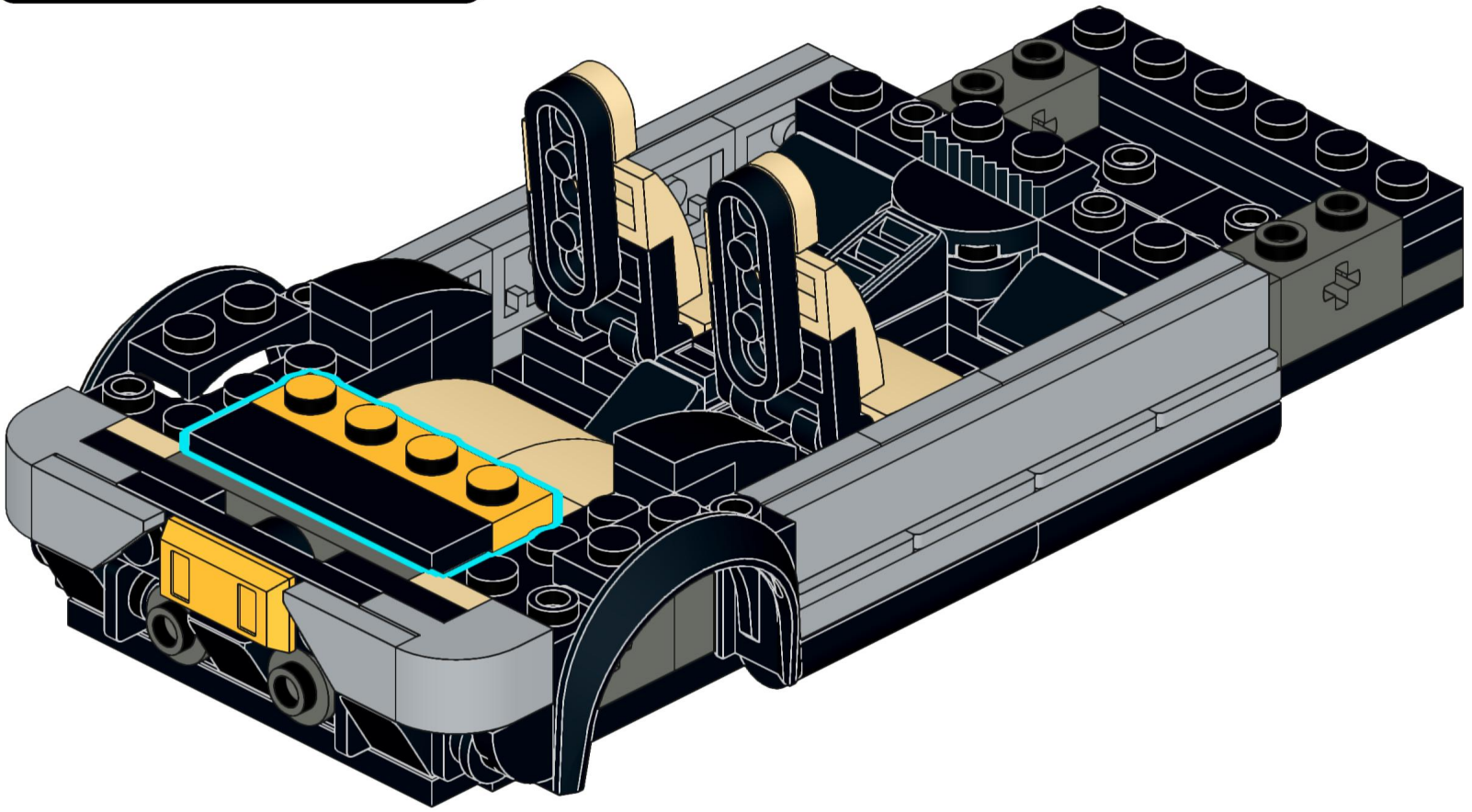

43

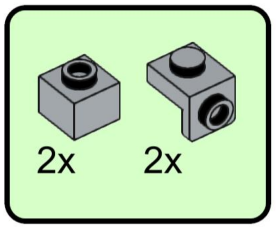

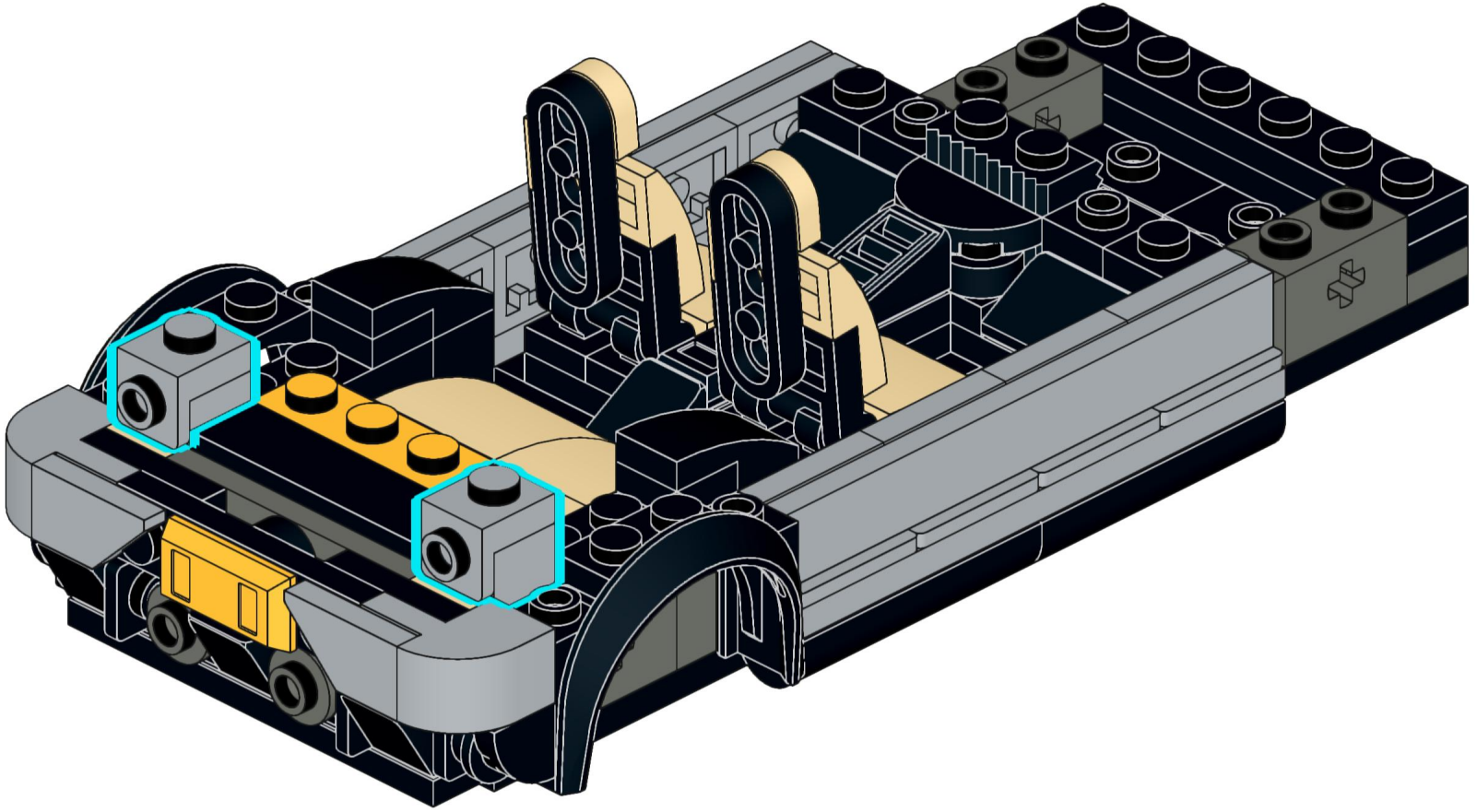

44

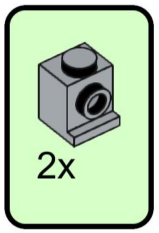

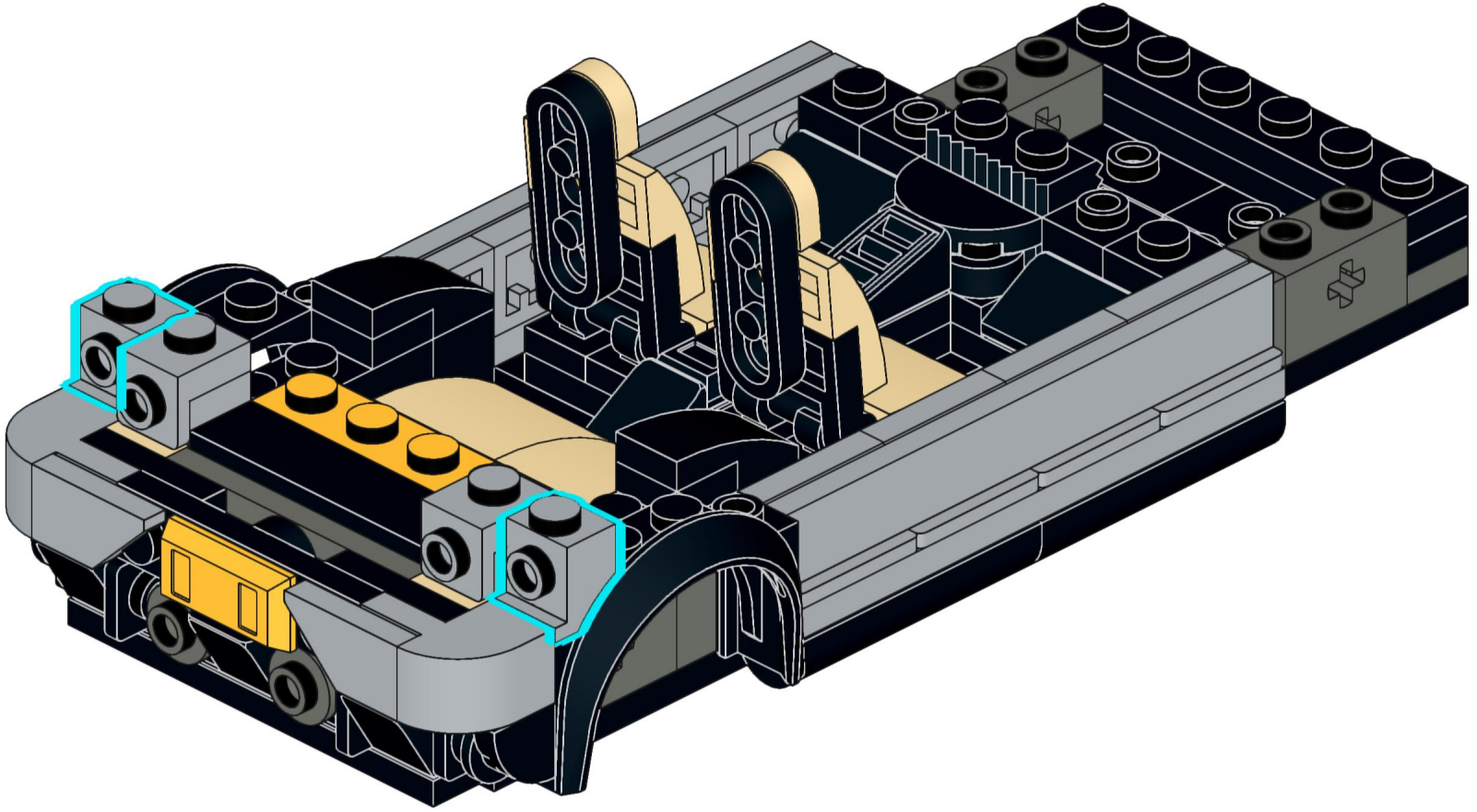

45

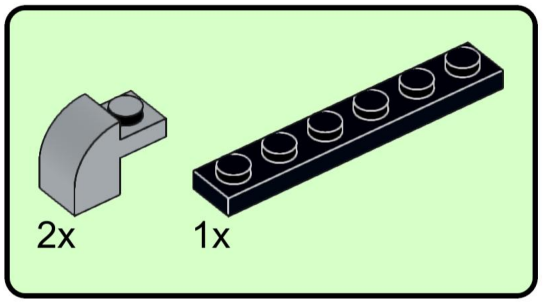

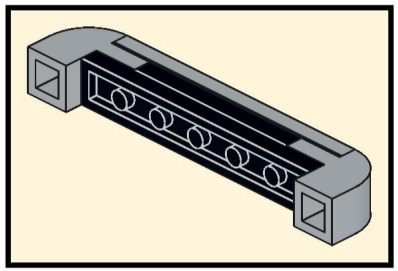

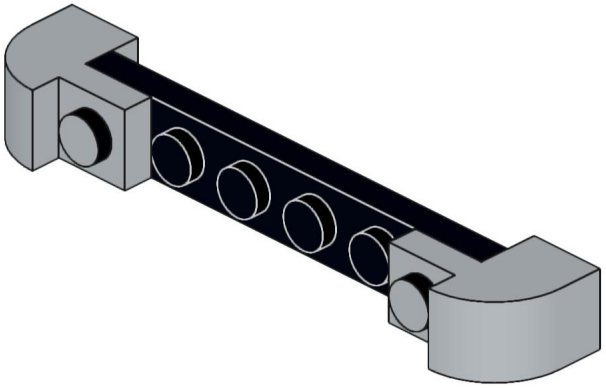

46

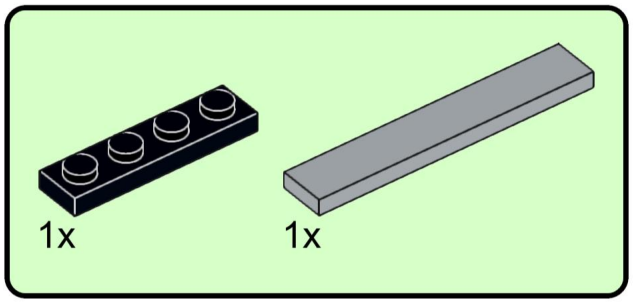

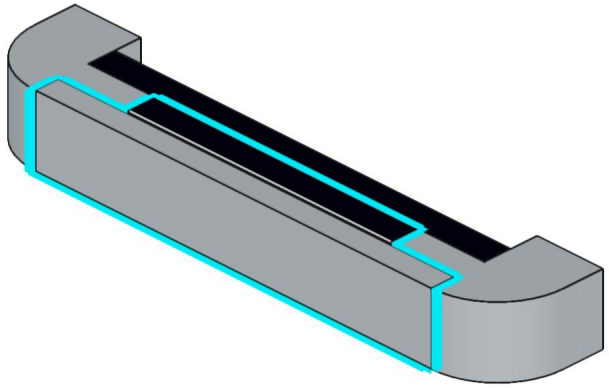

47

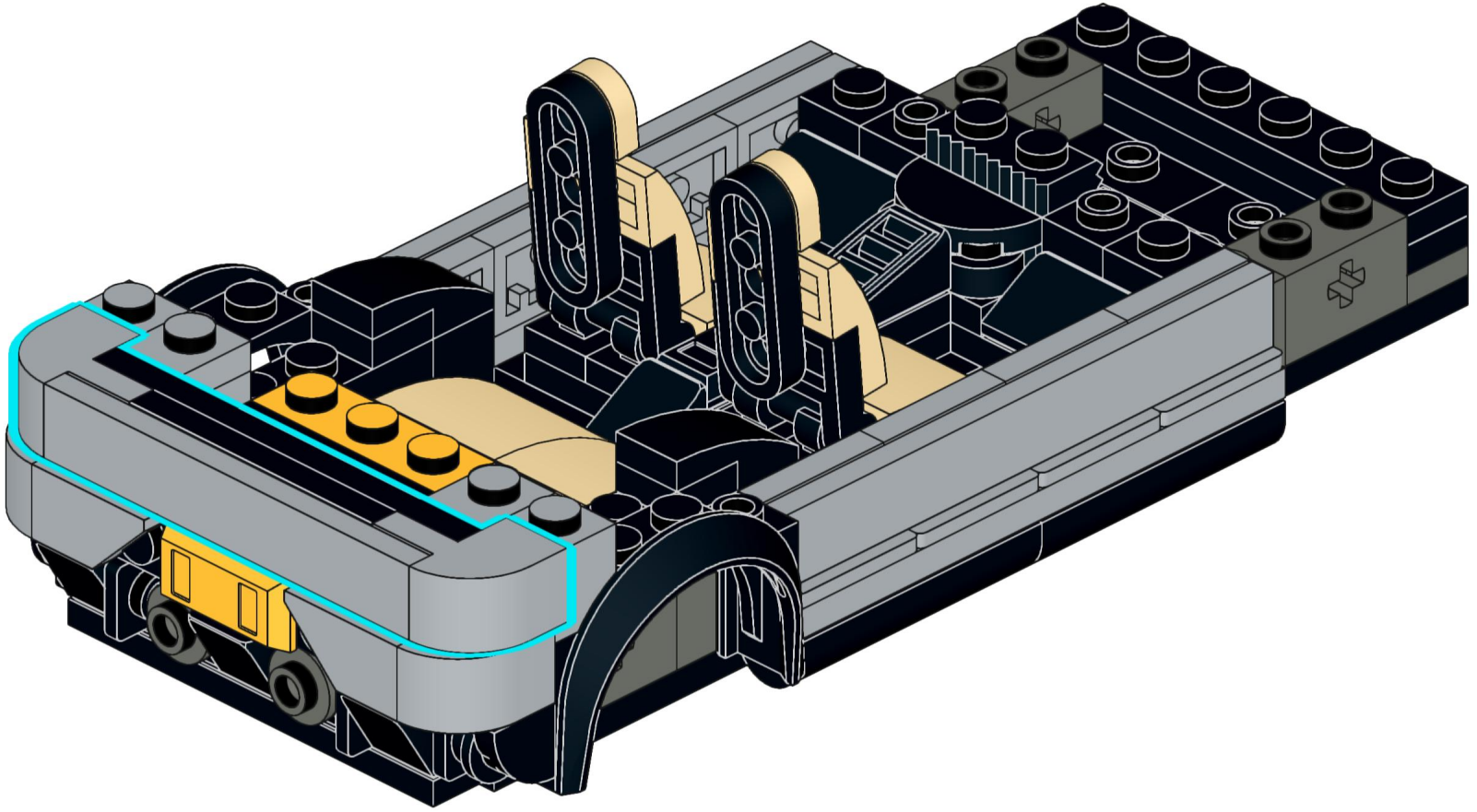

48

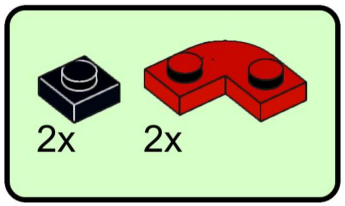

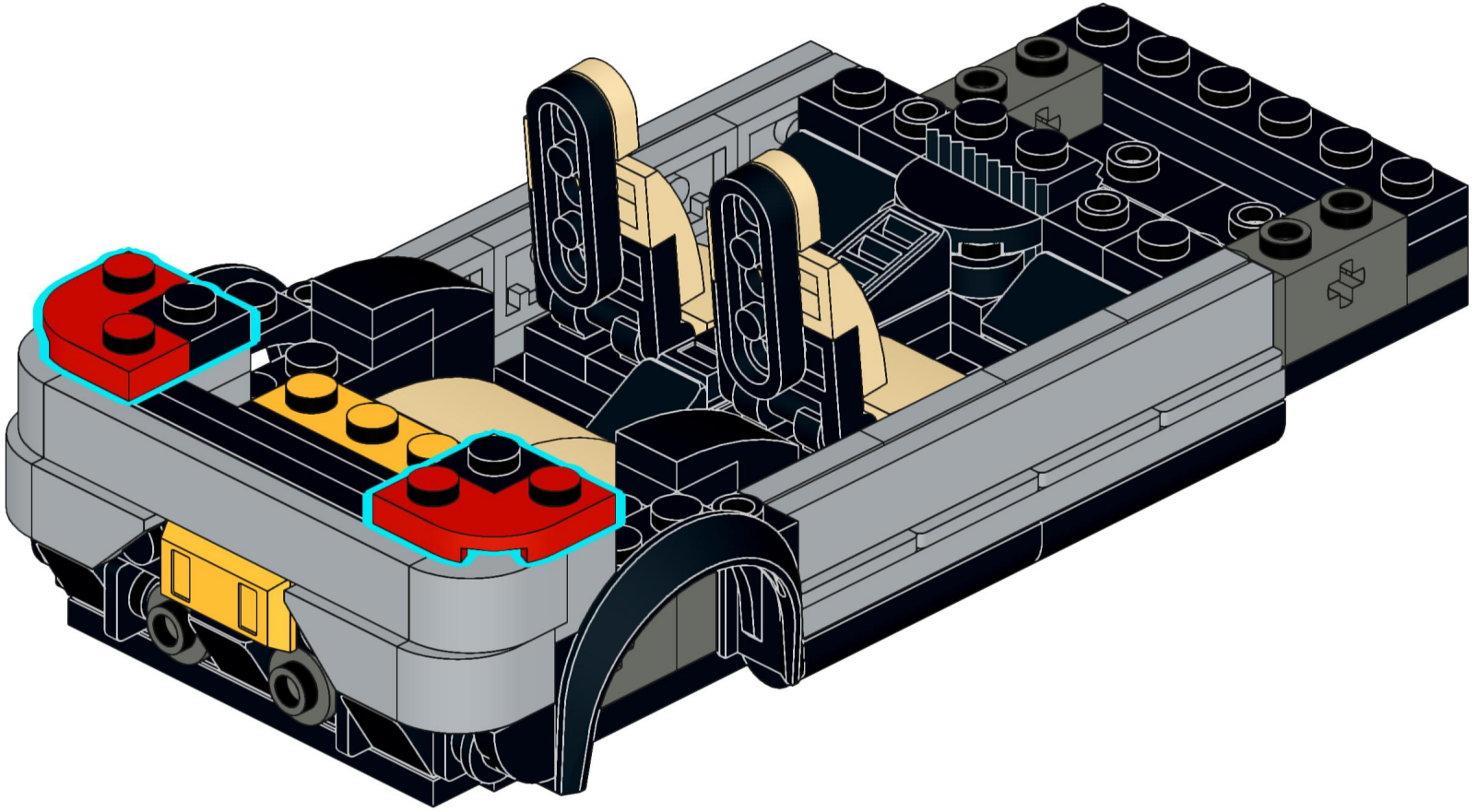

49

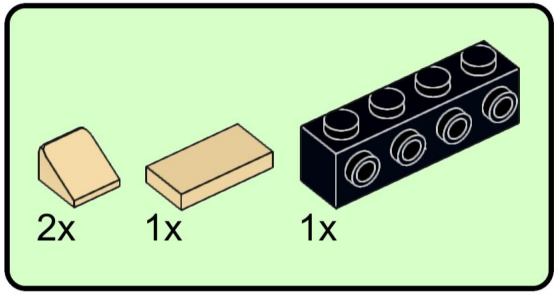

50

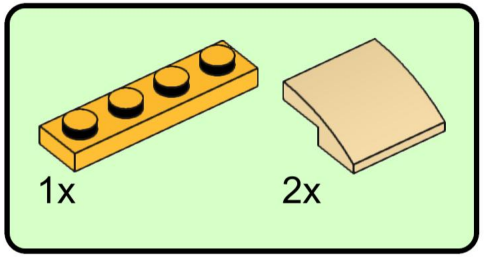

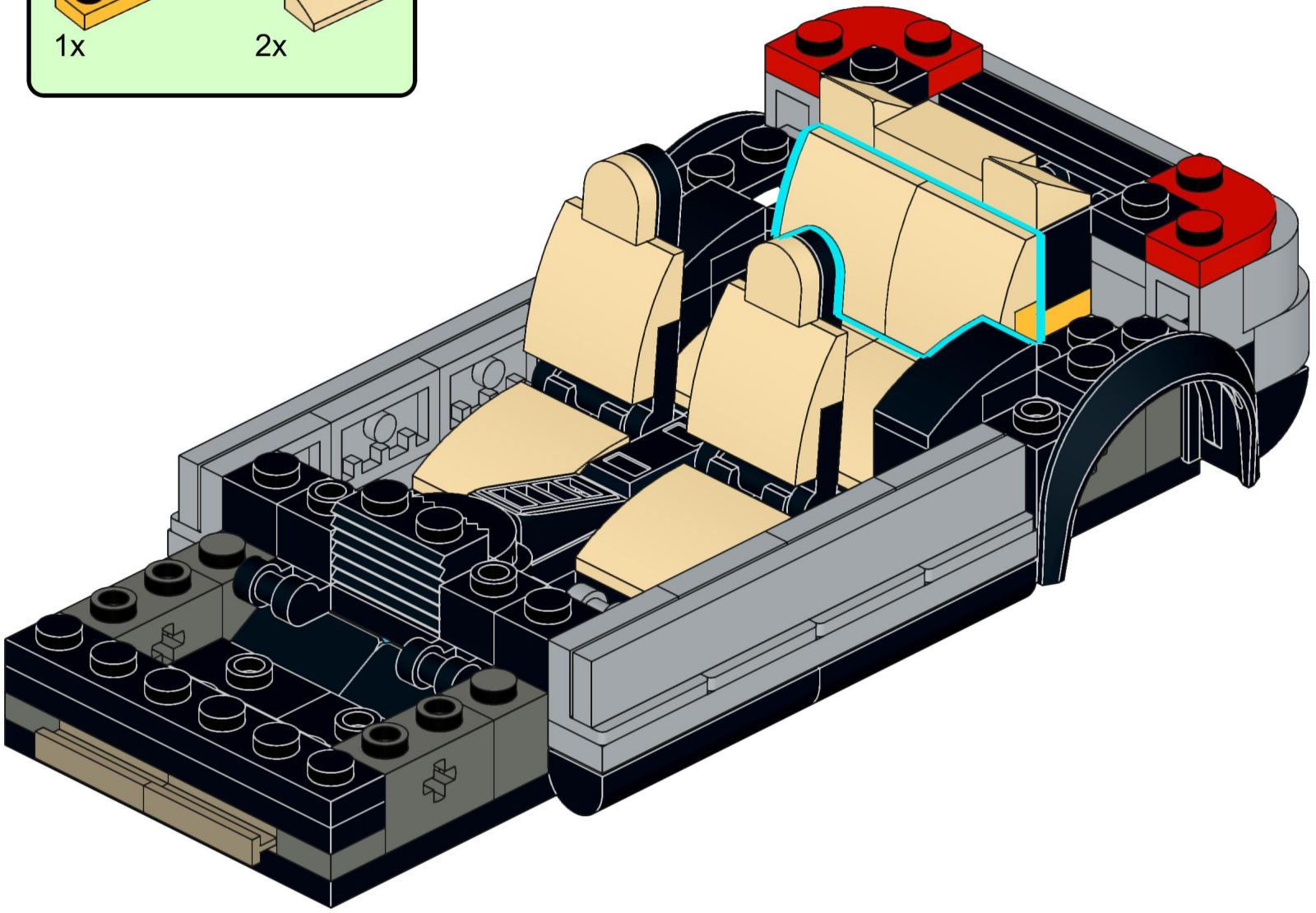

51

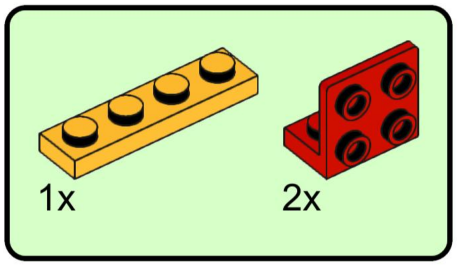

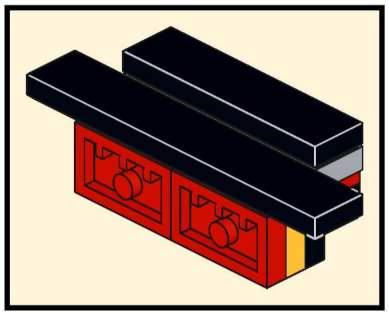

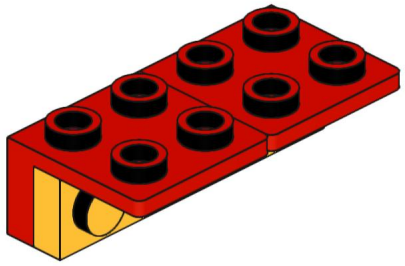

52

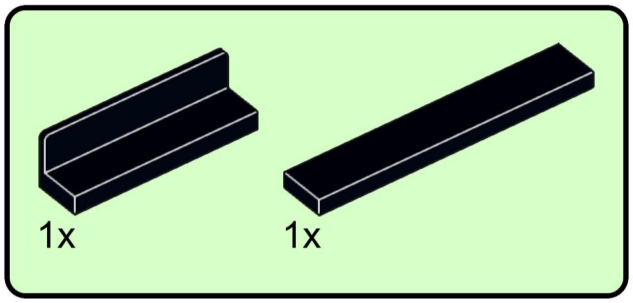

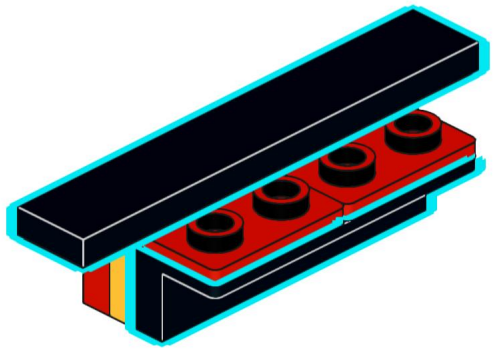

53

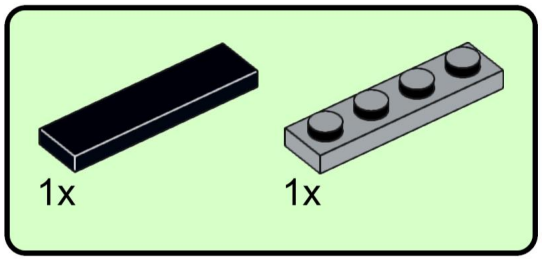

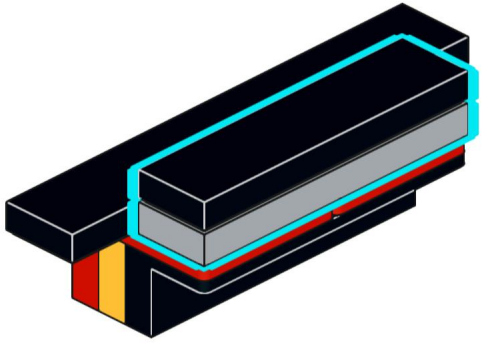

54

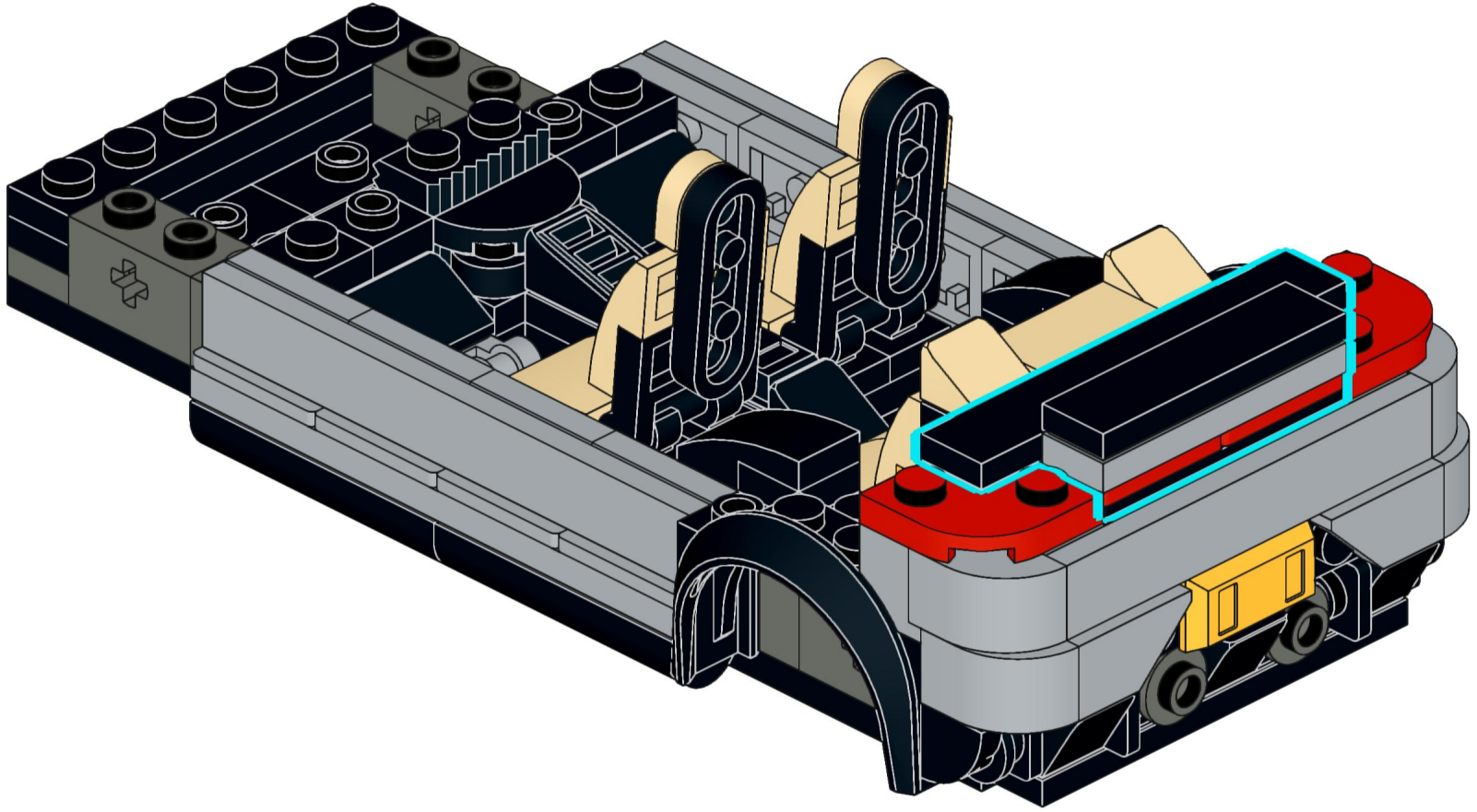

55

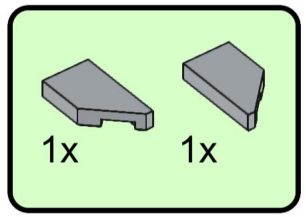

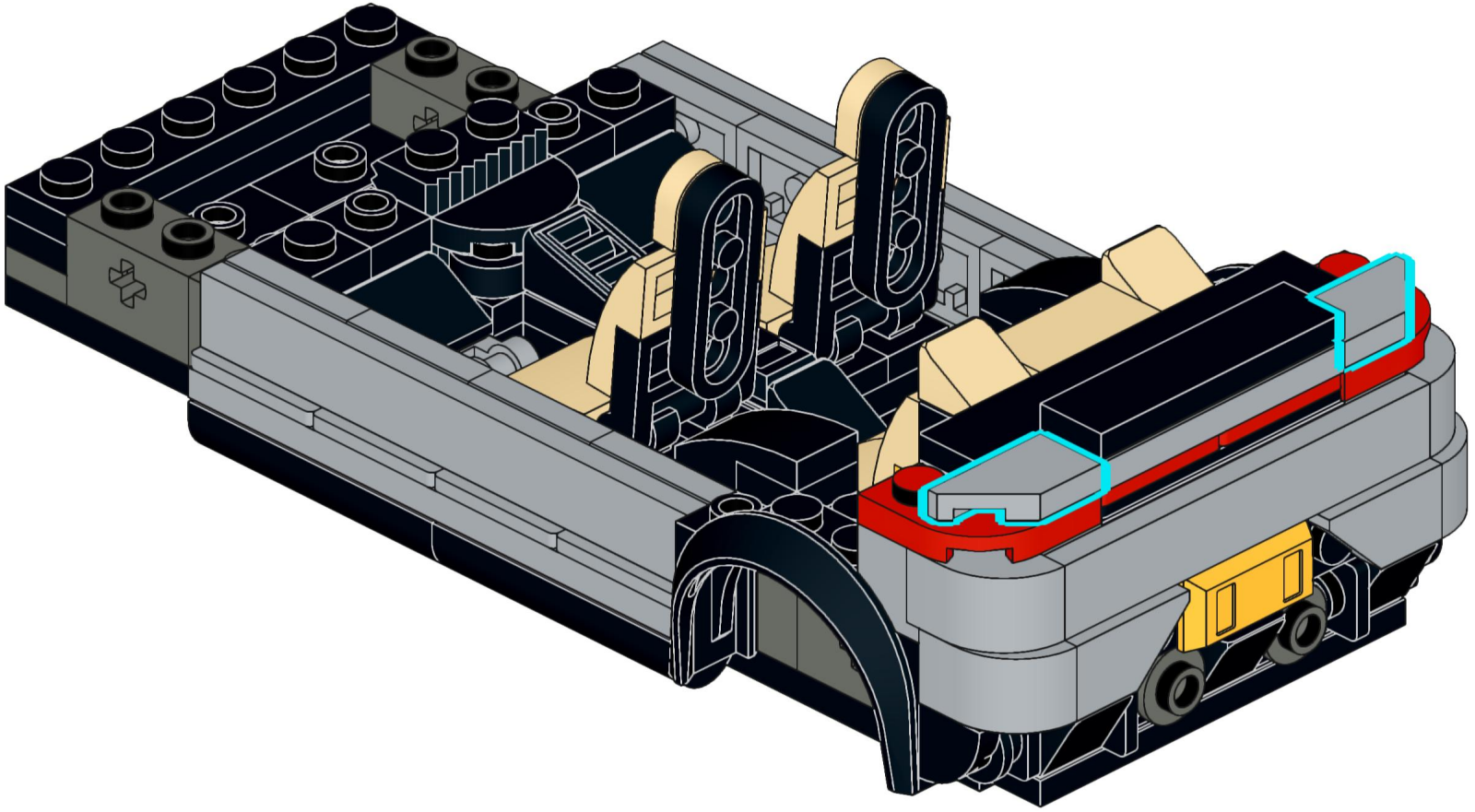

56

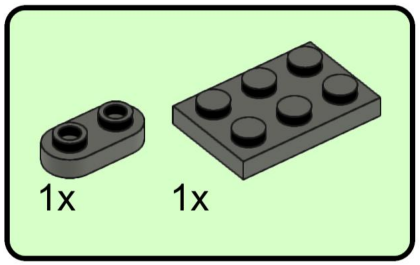

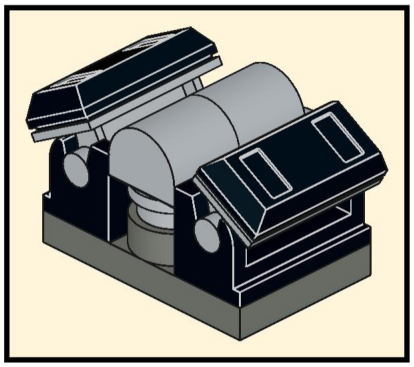

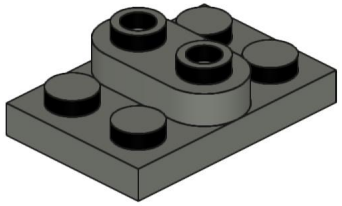

57

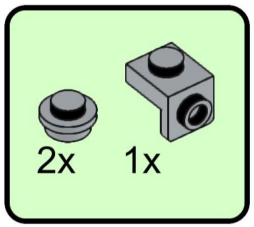

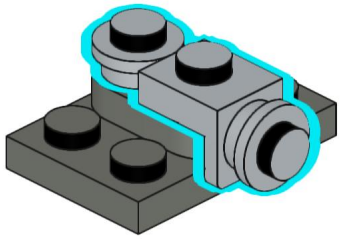

58

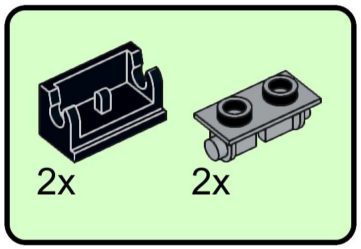

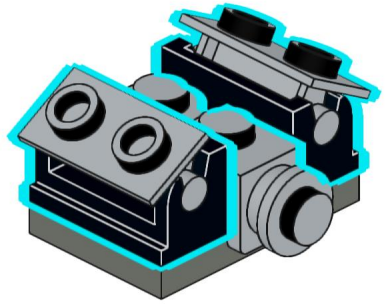

59

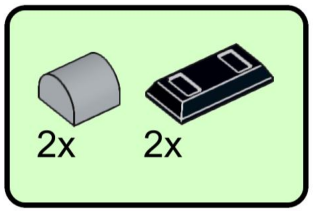

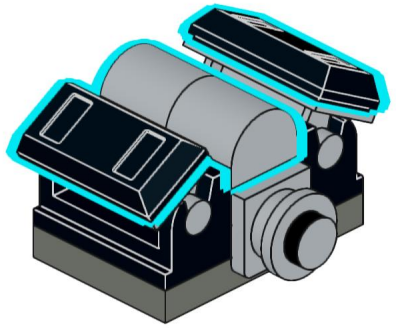

60

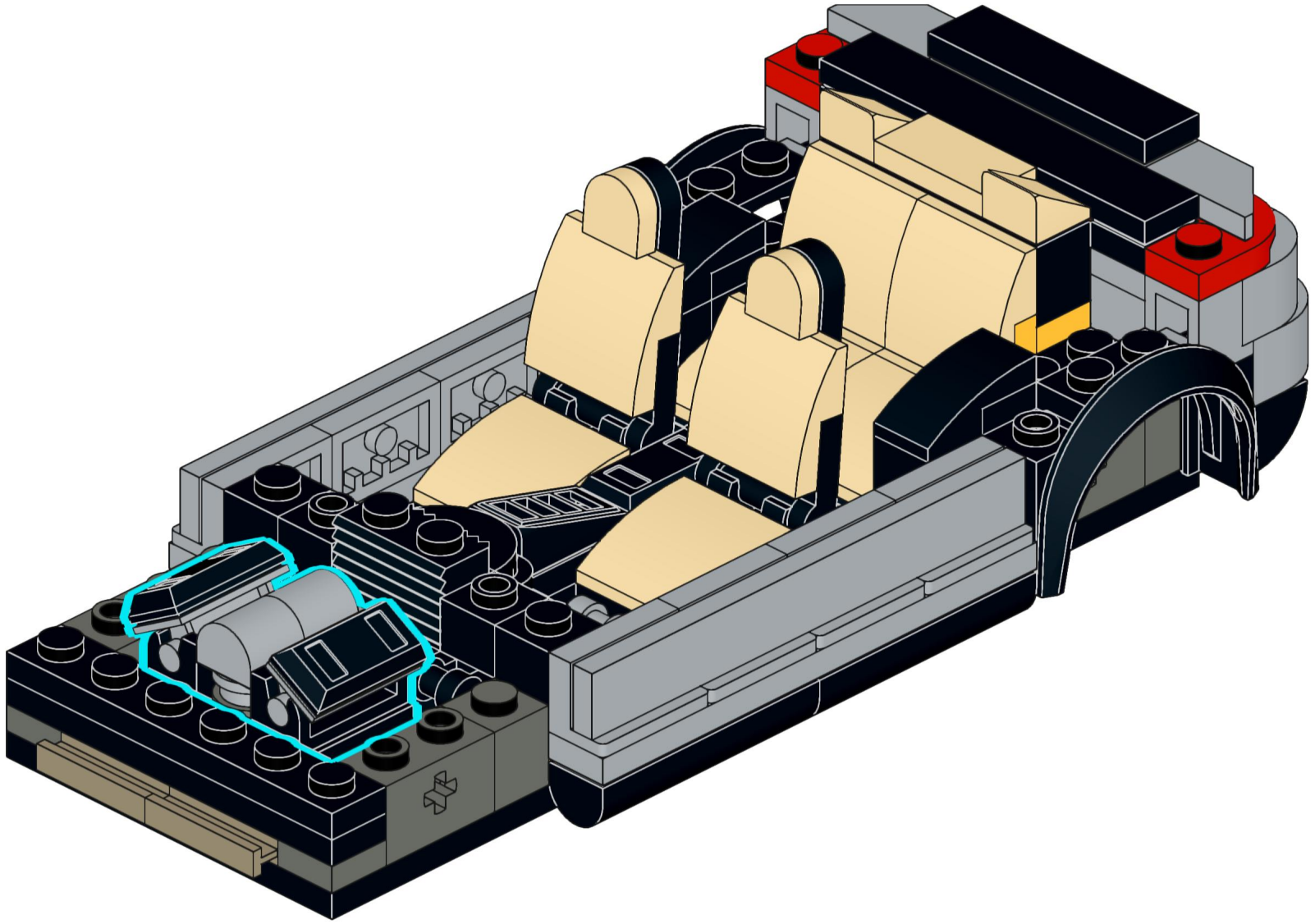

61

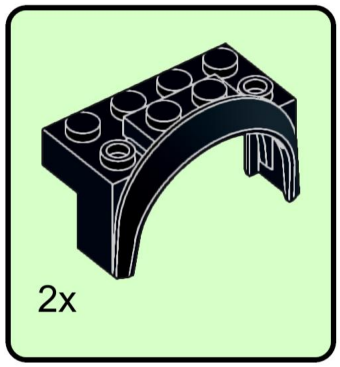

62

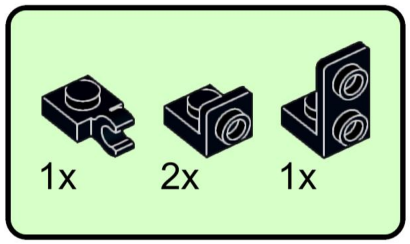

63

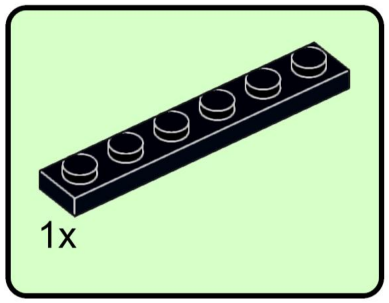

64

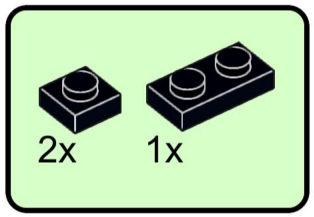

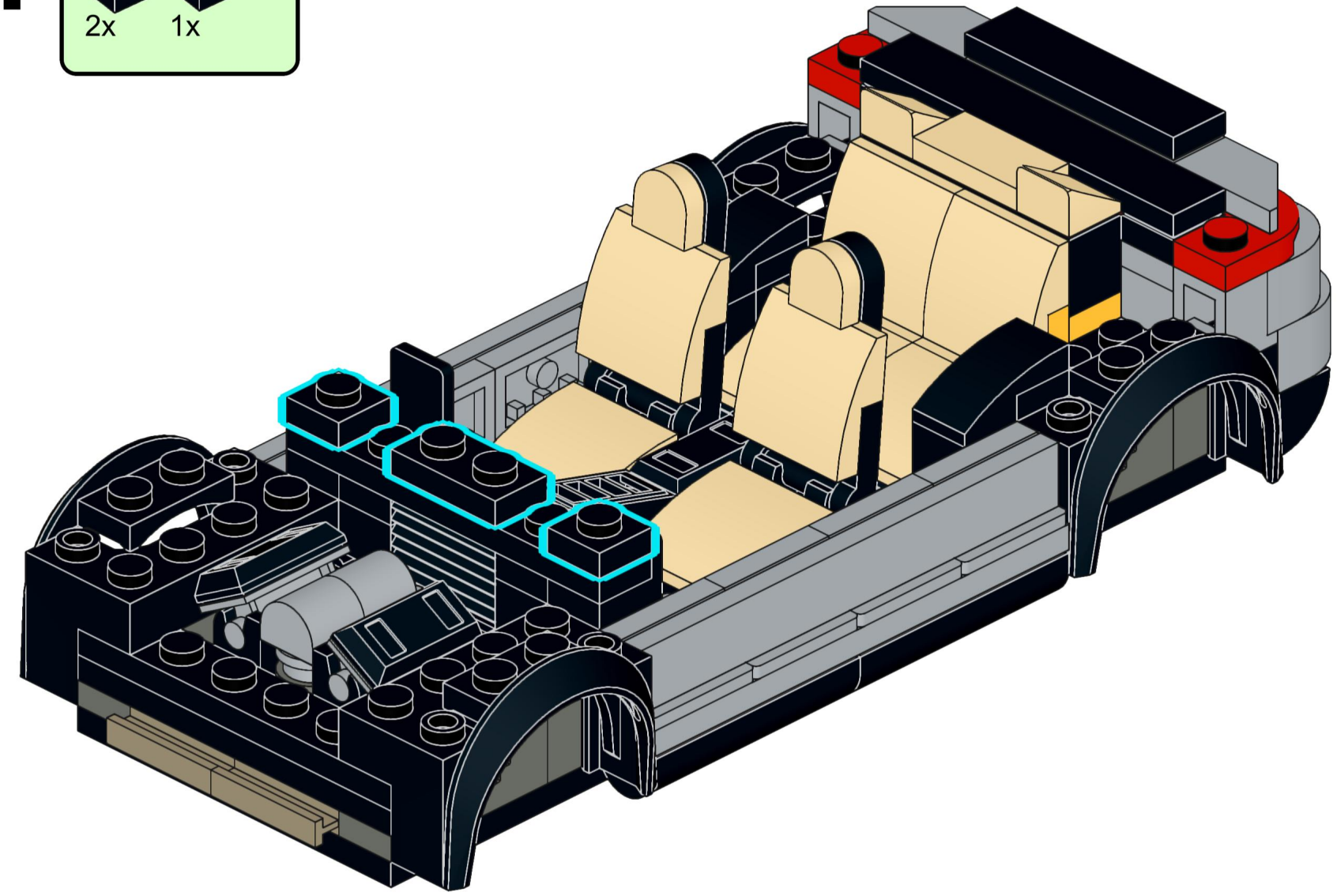

65

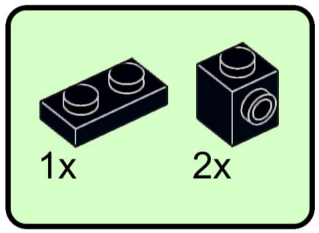

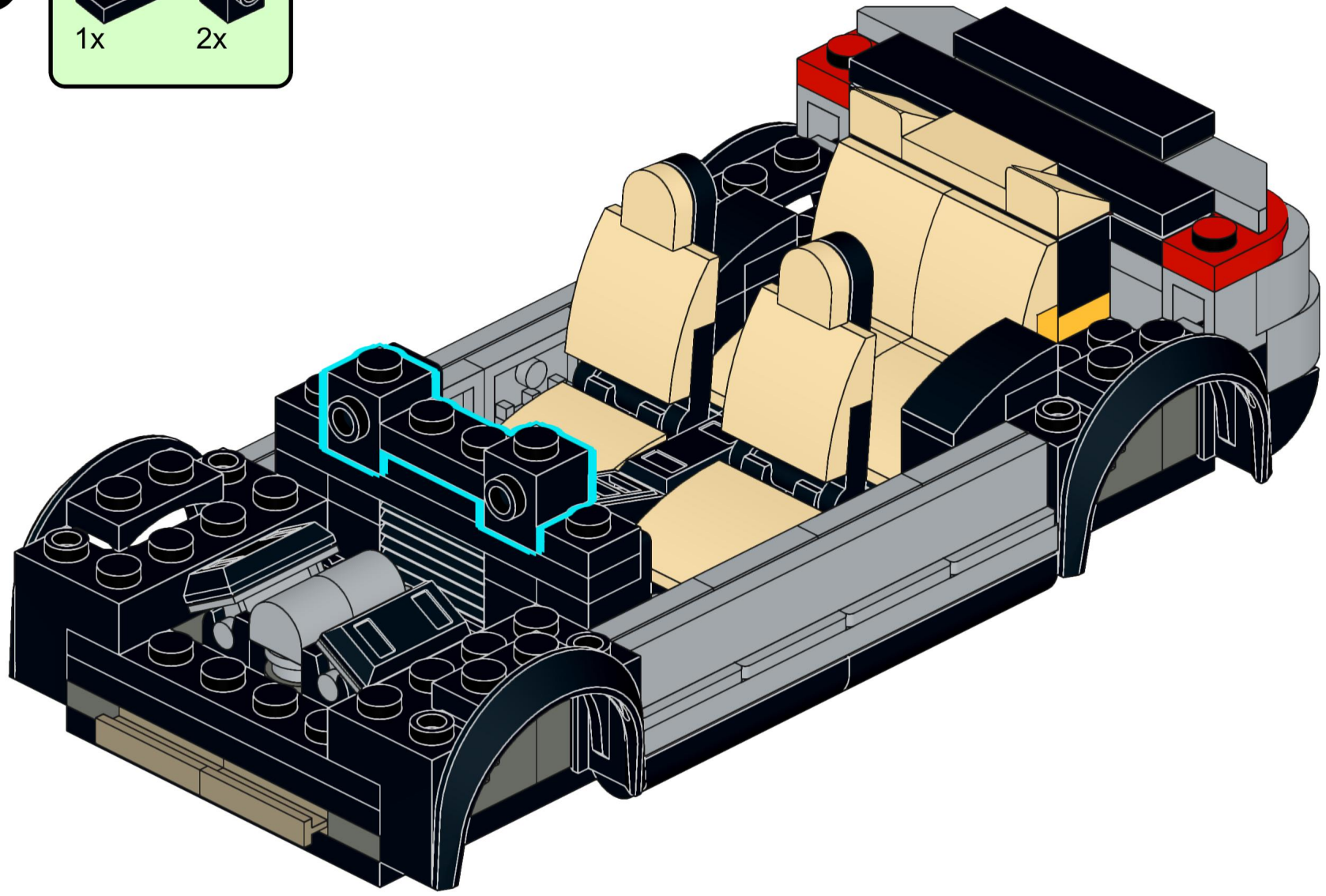

66

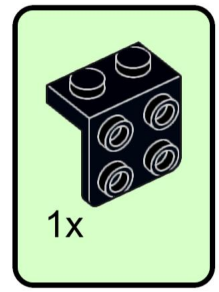

67

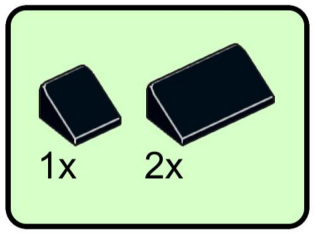

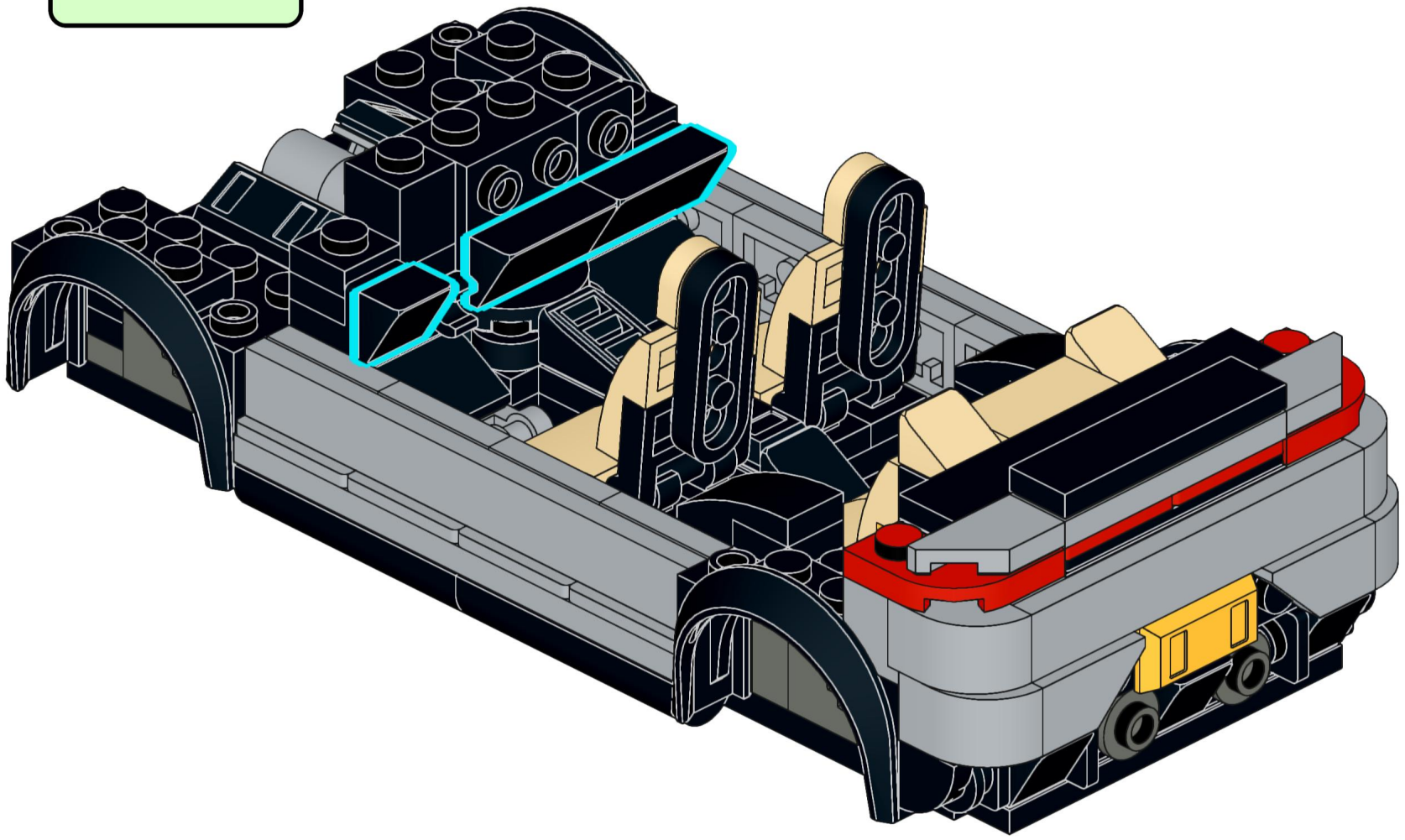

68

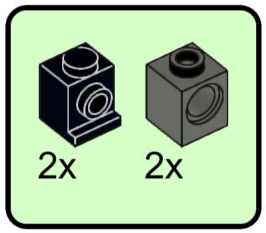

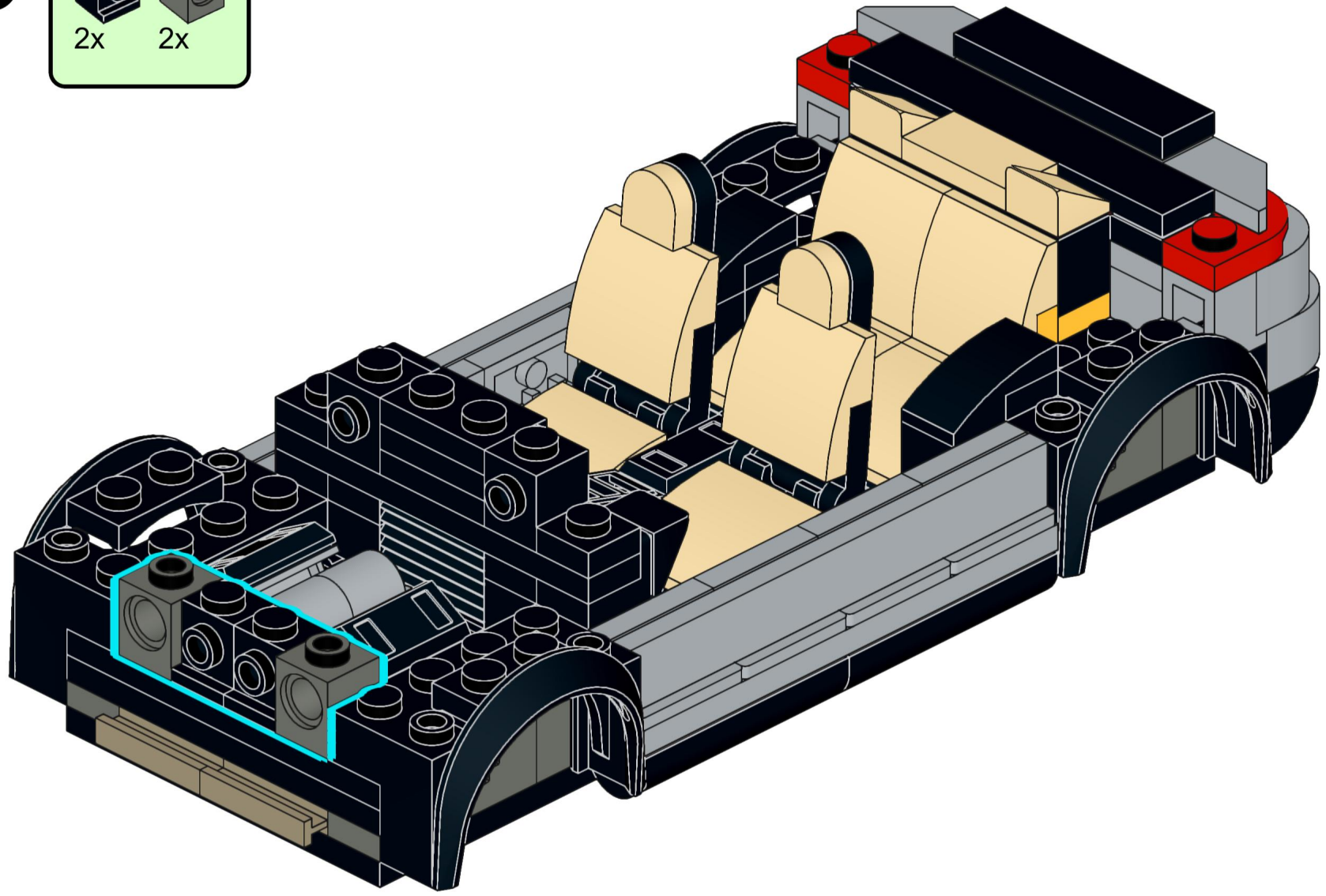

69

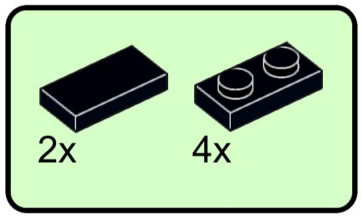

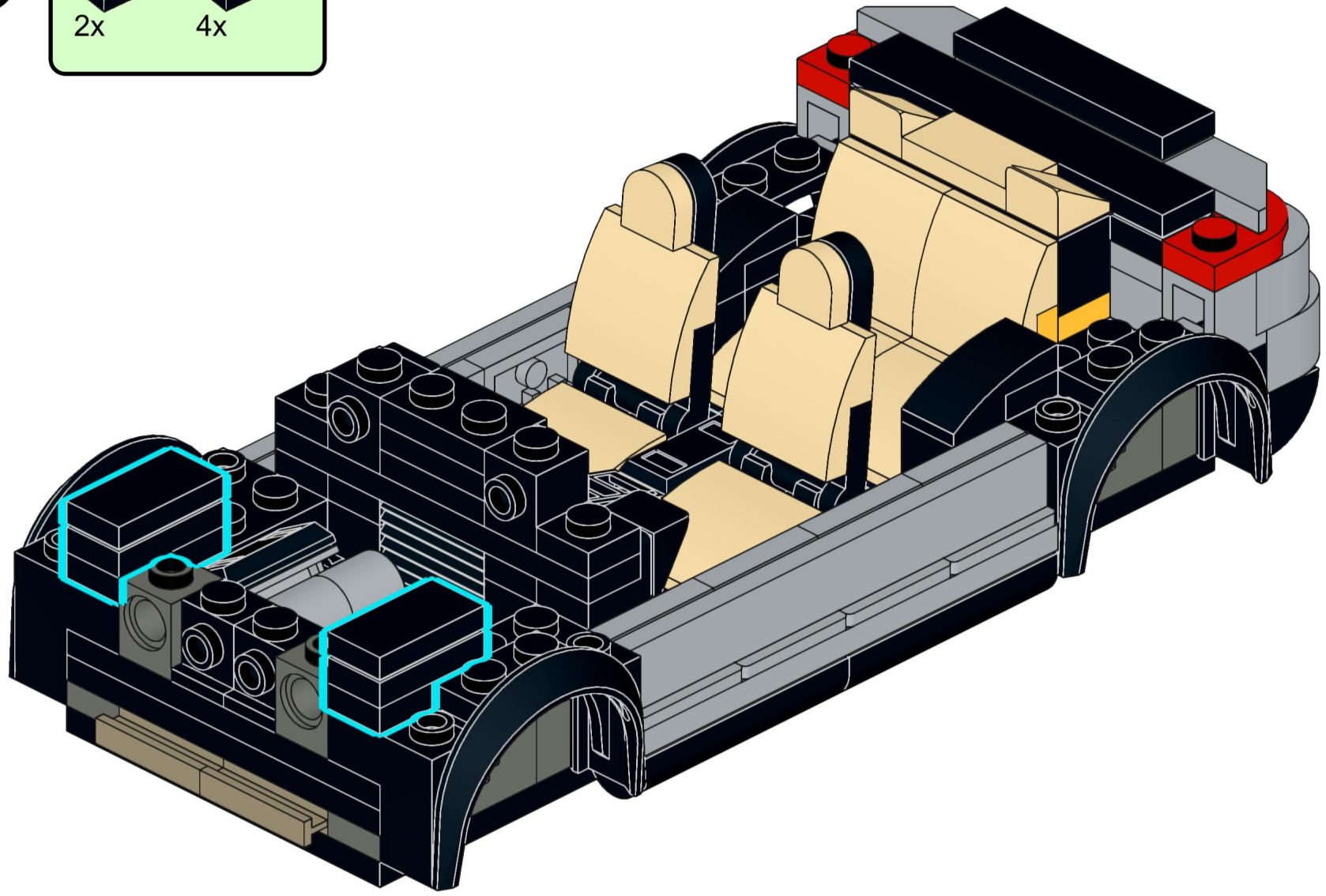

70

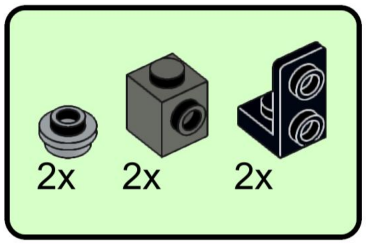

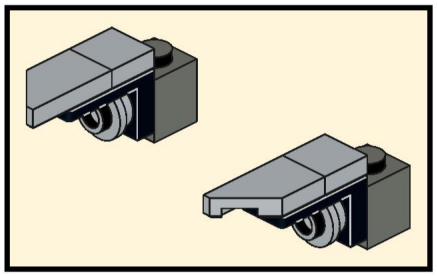

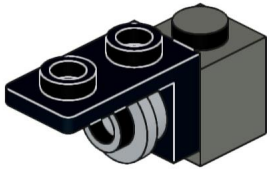

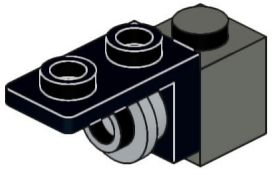

71

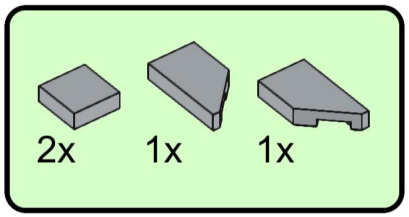

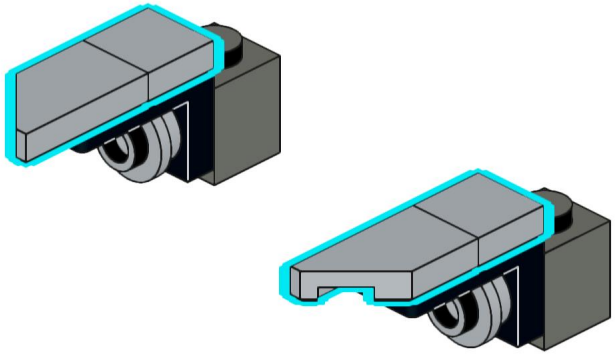

72

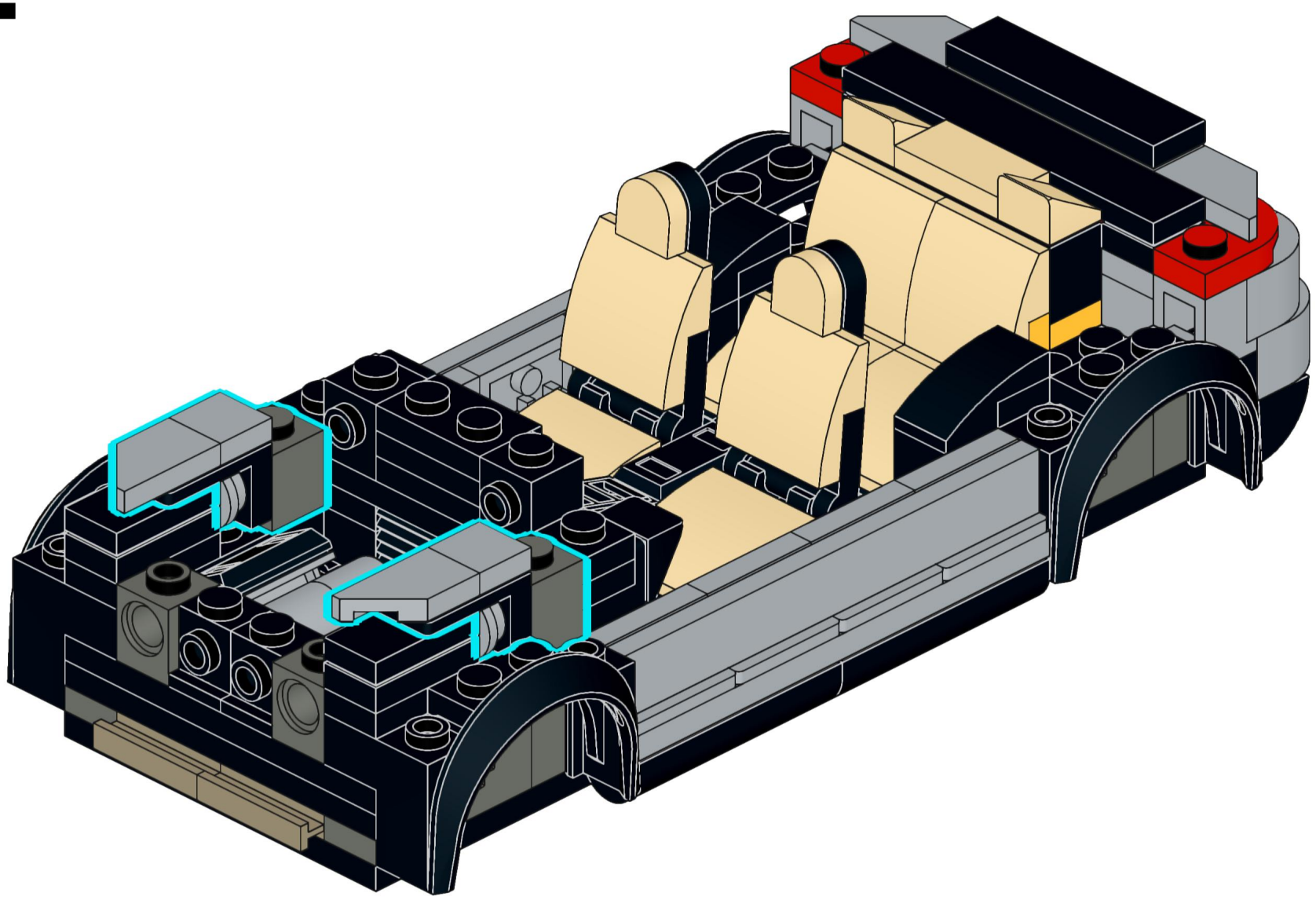

73

2x

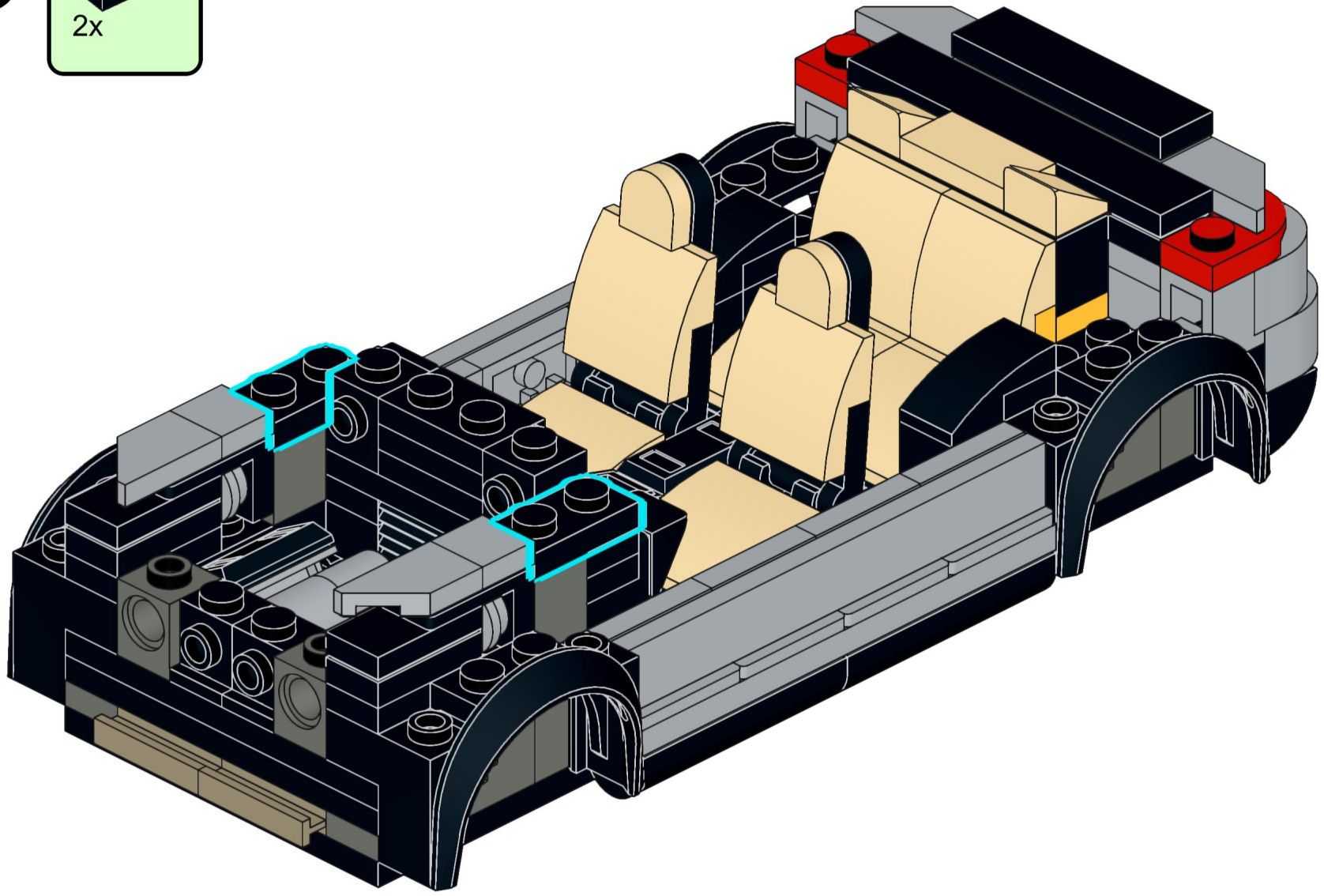

74

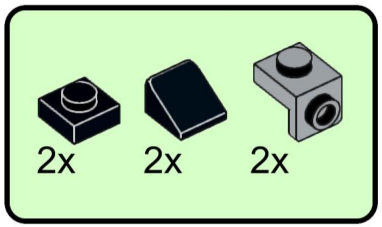

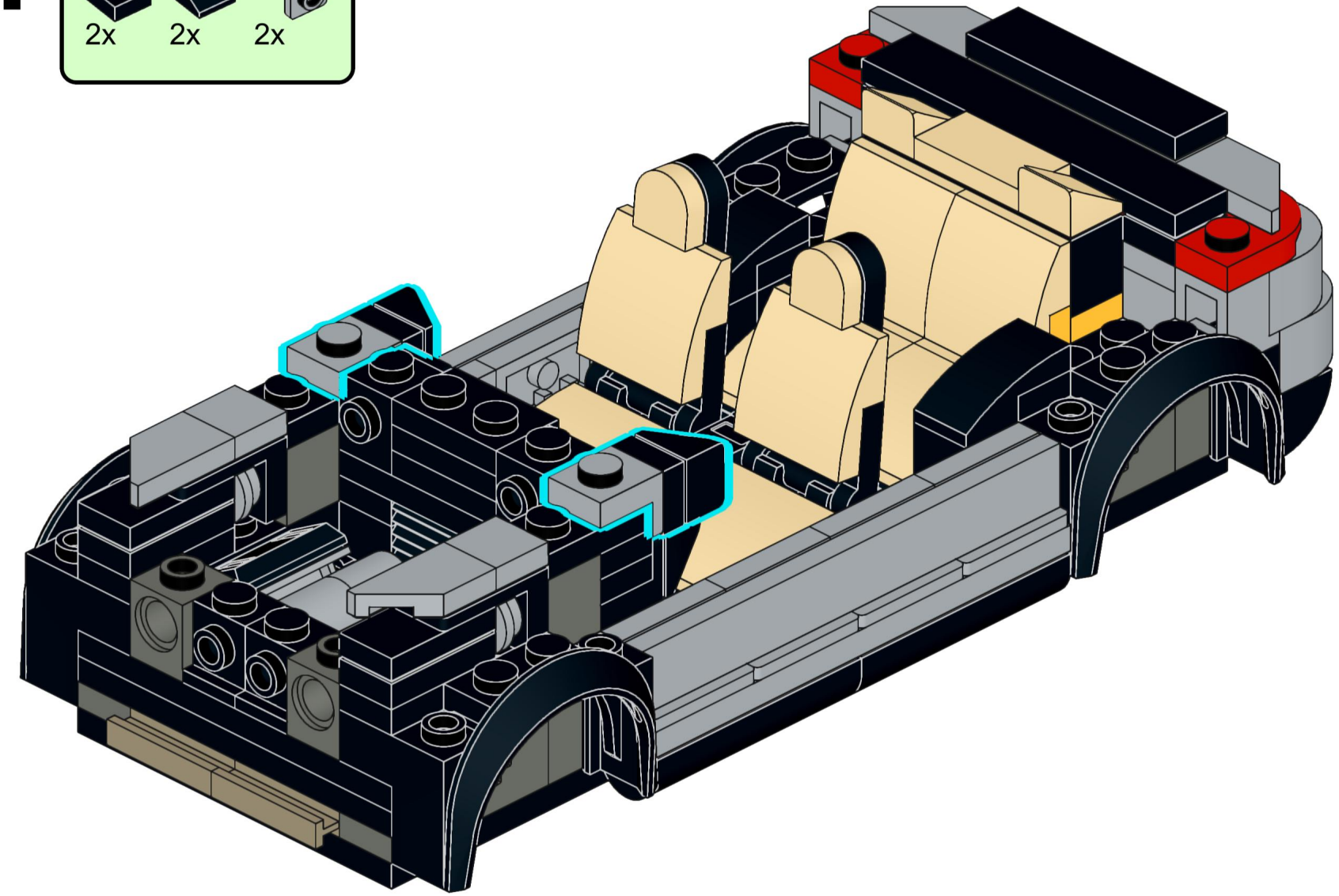

75

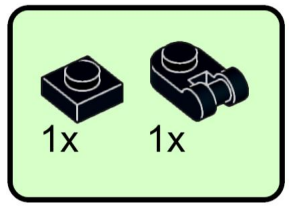

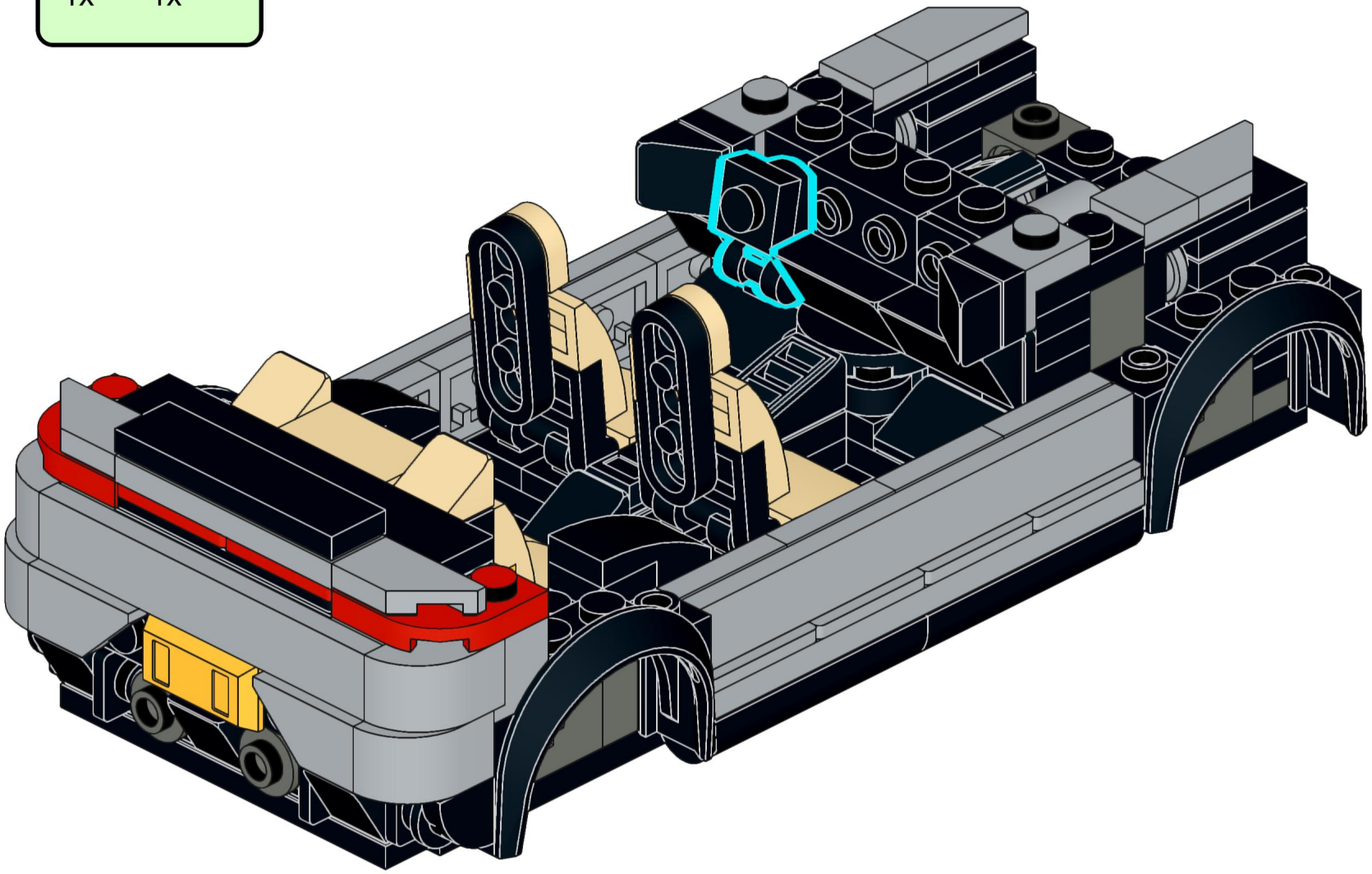

76

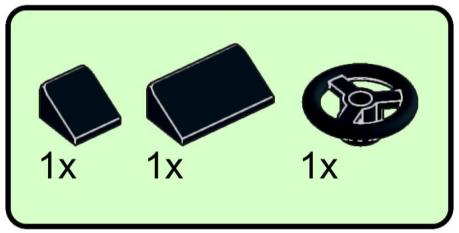

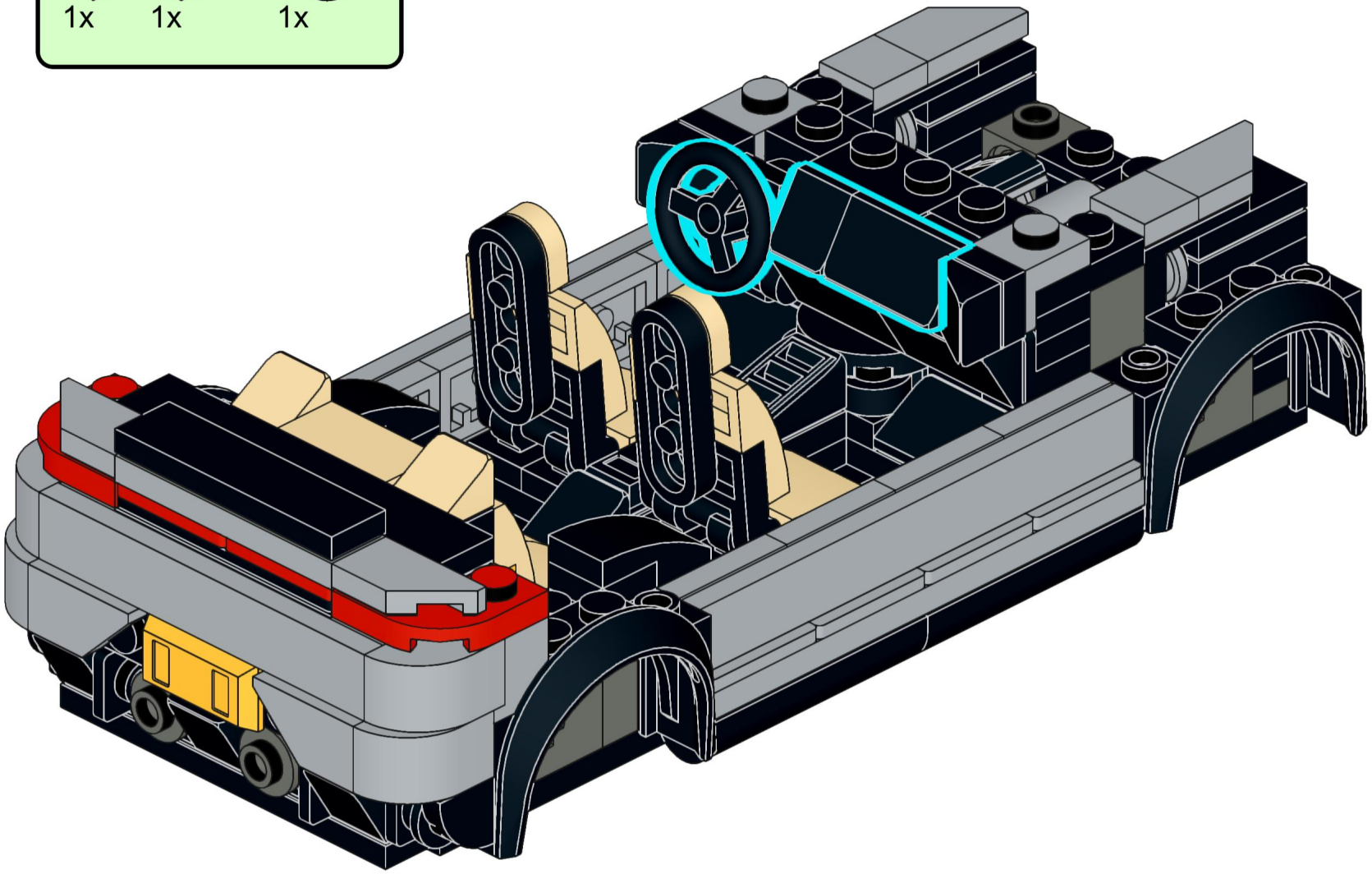

77

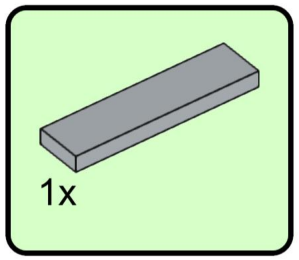

78

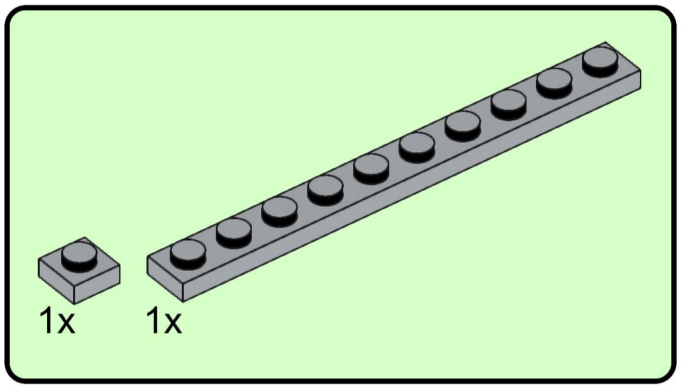

79

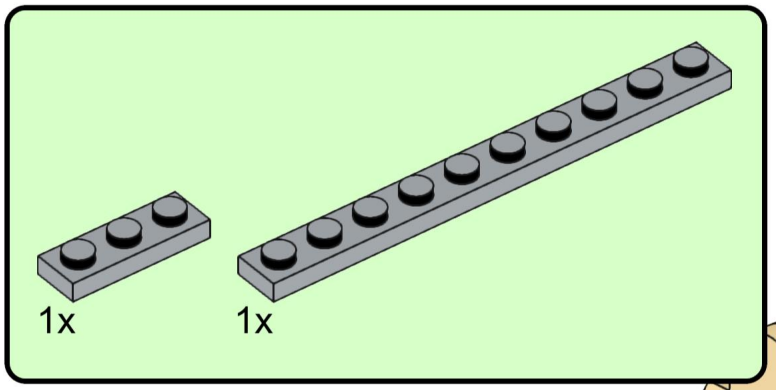

80

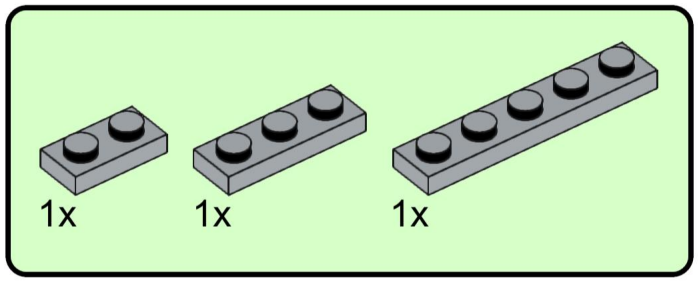

81



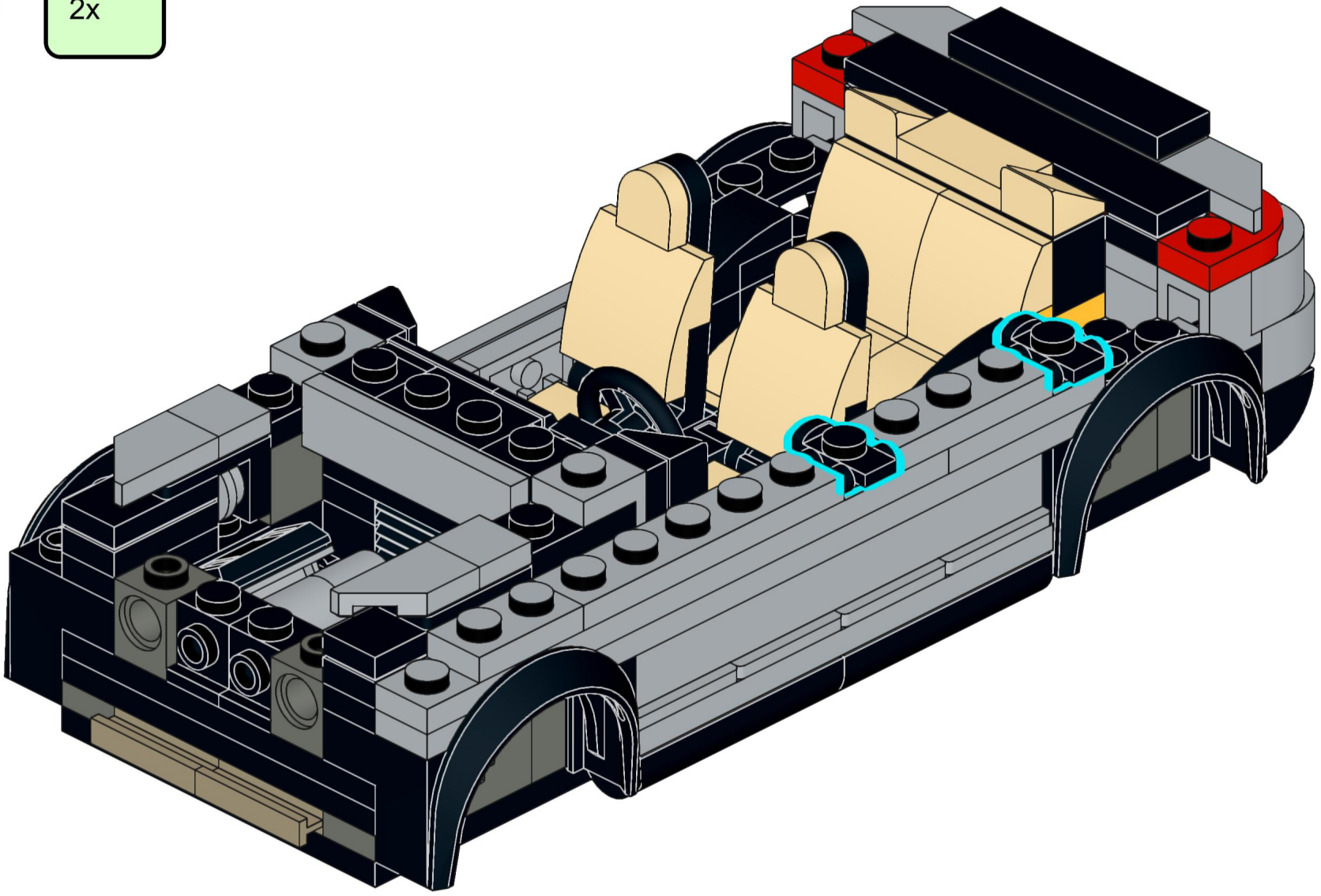

82

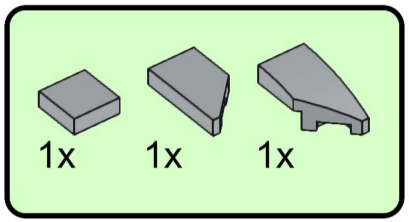

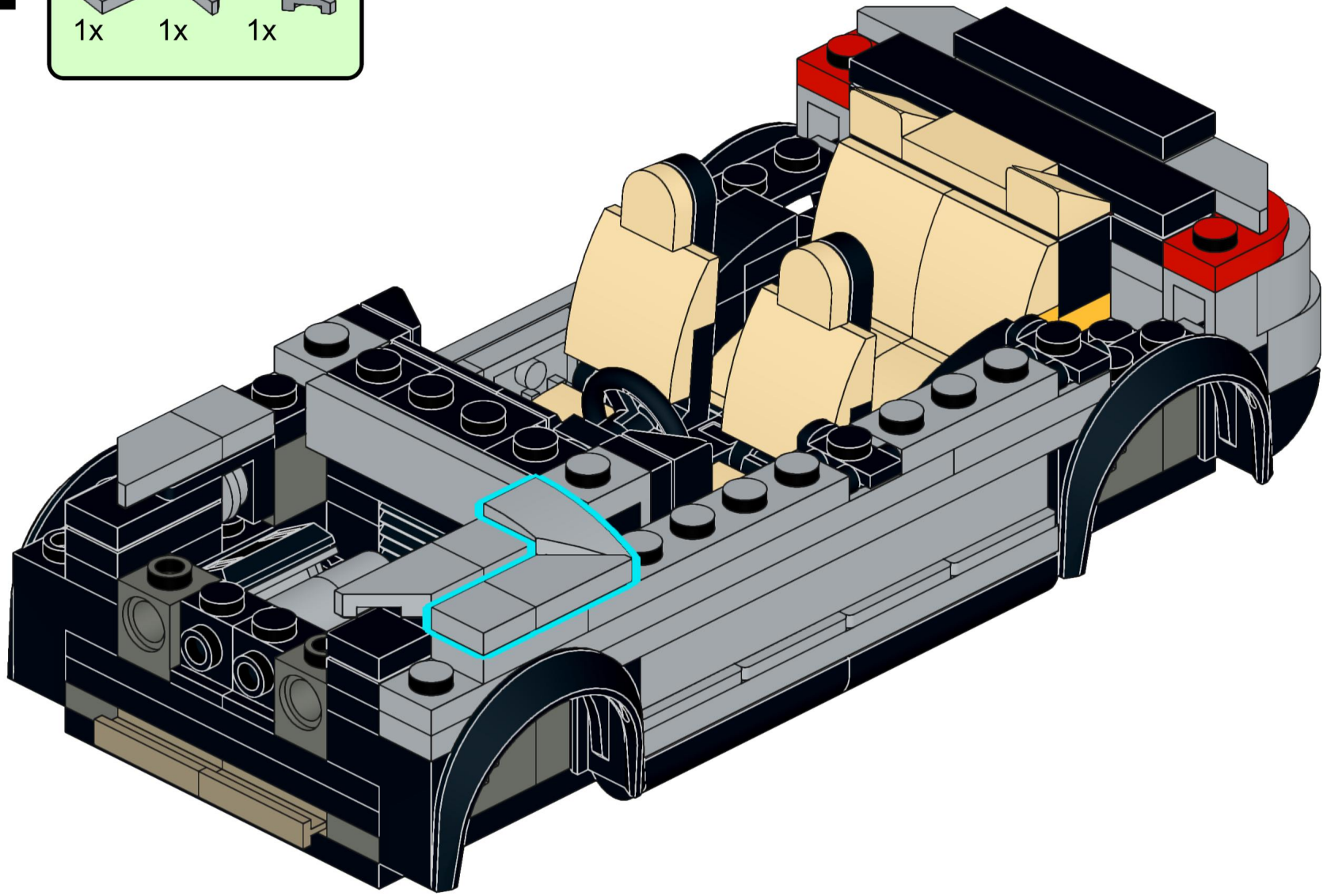

83

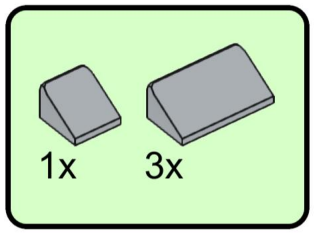

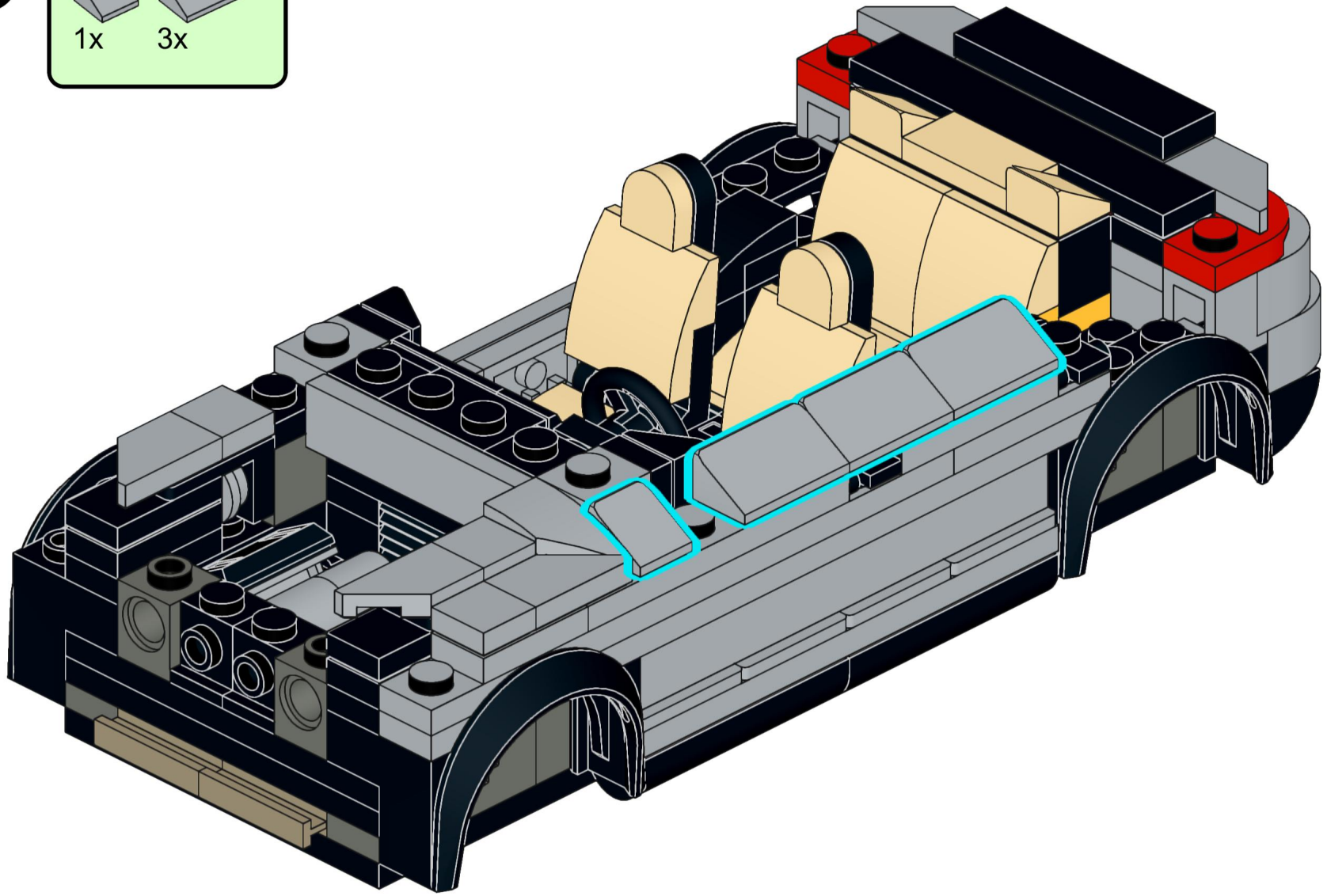

84

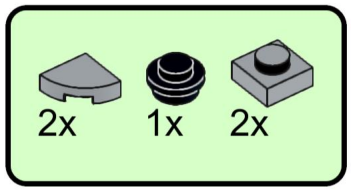

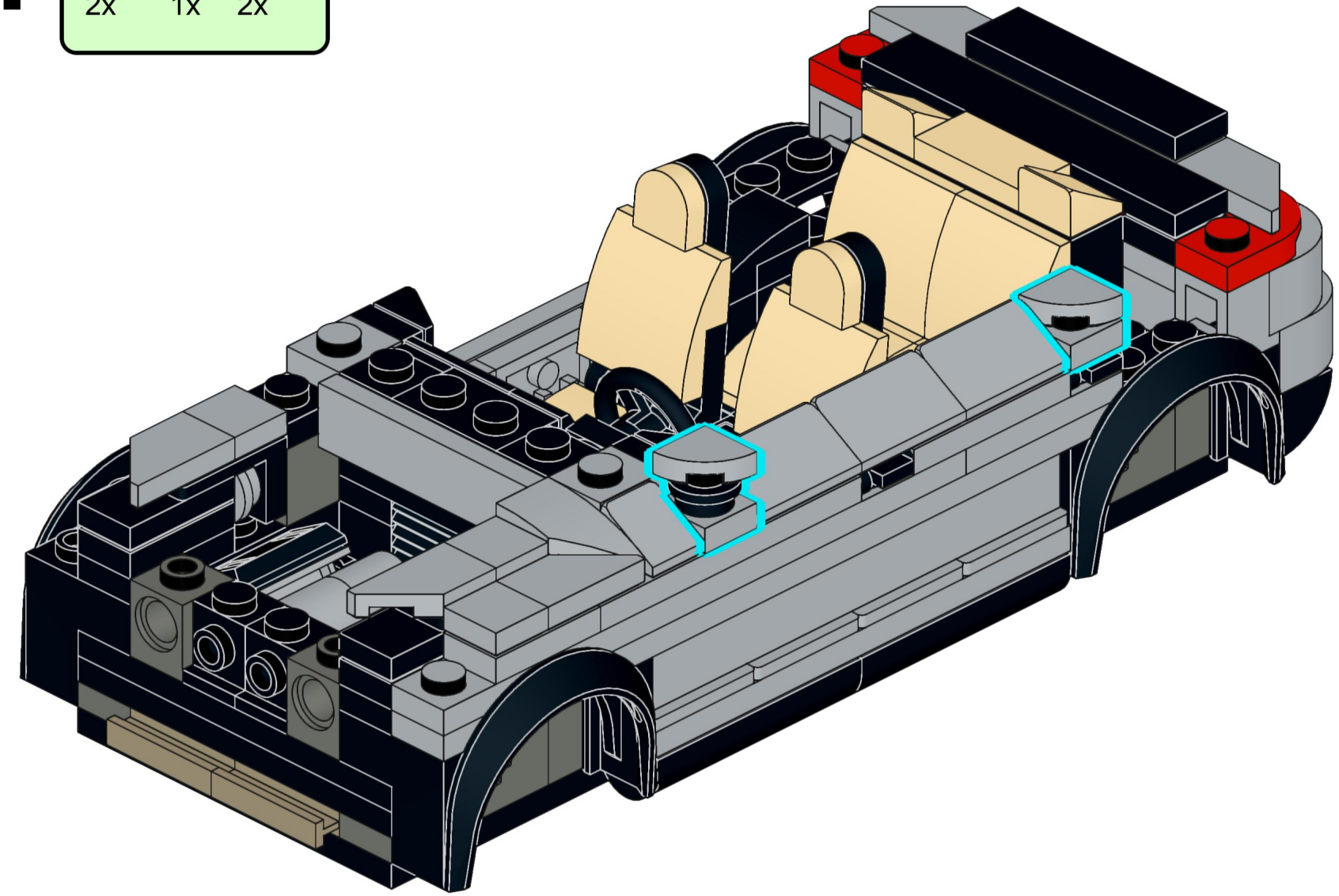

85

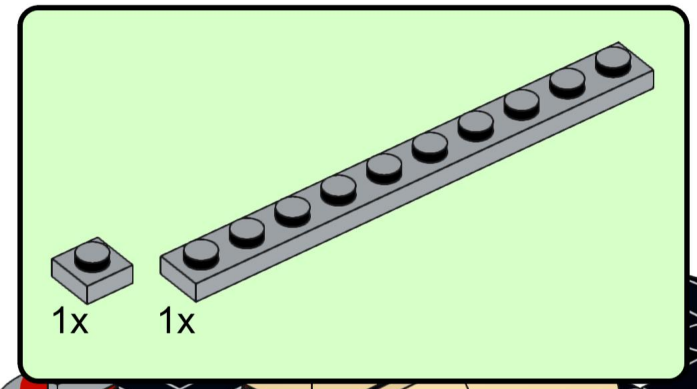

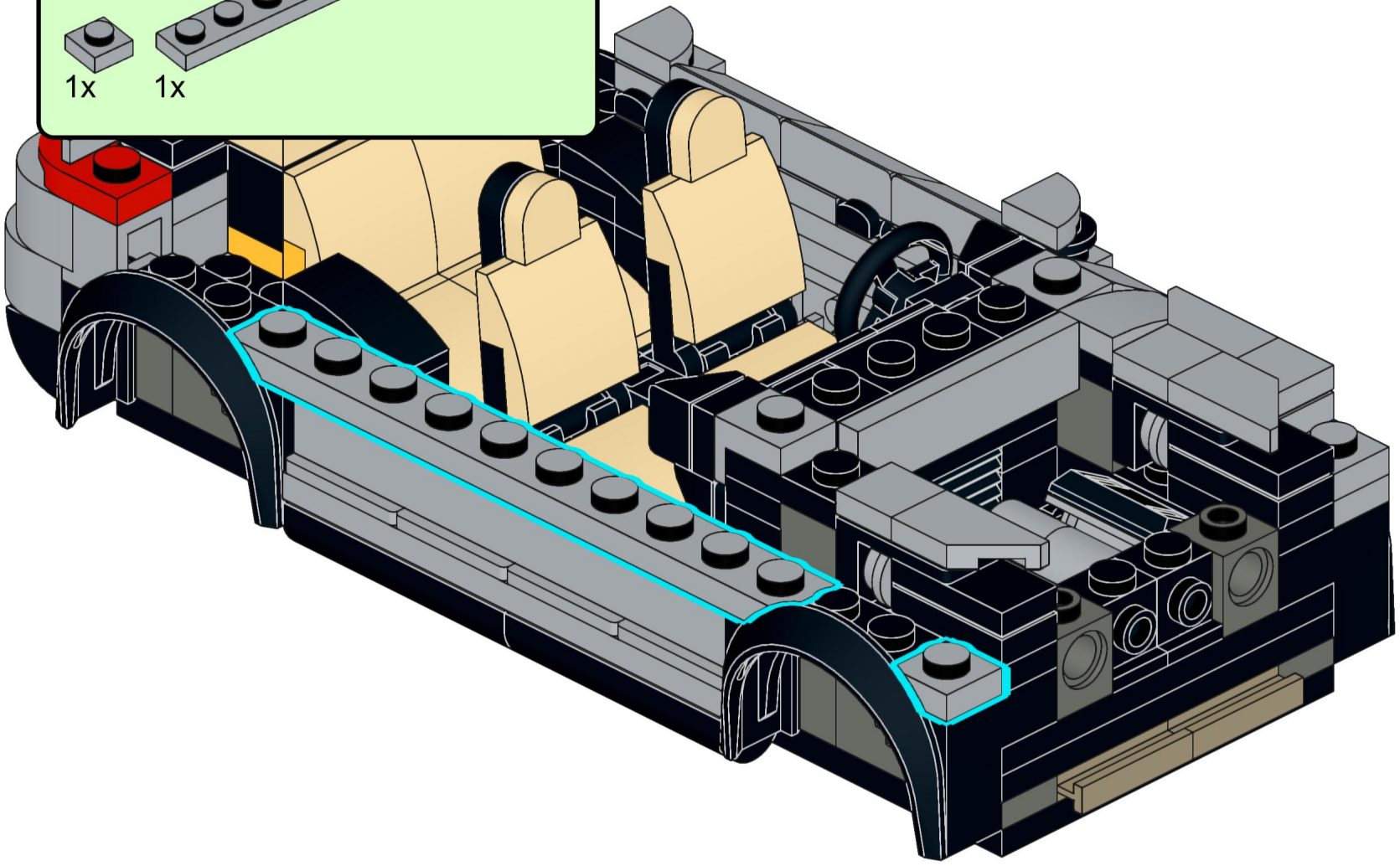

86

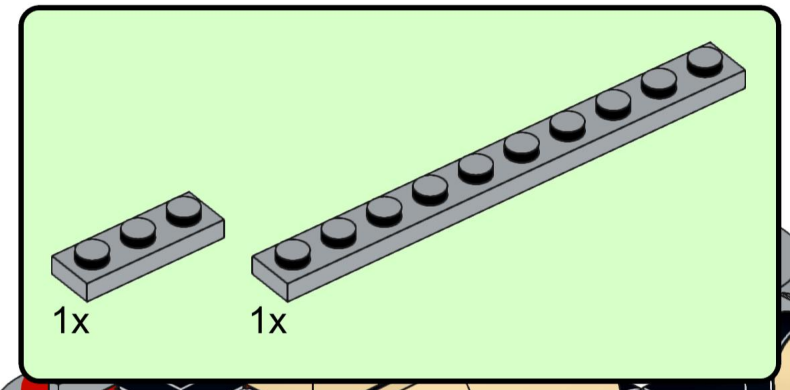

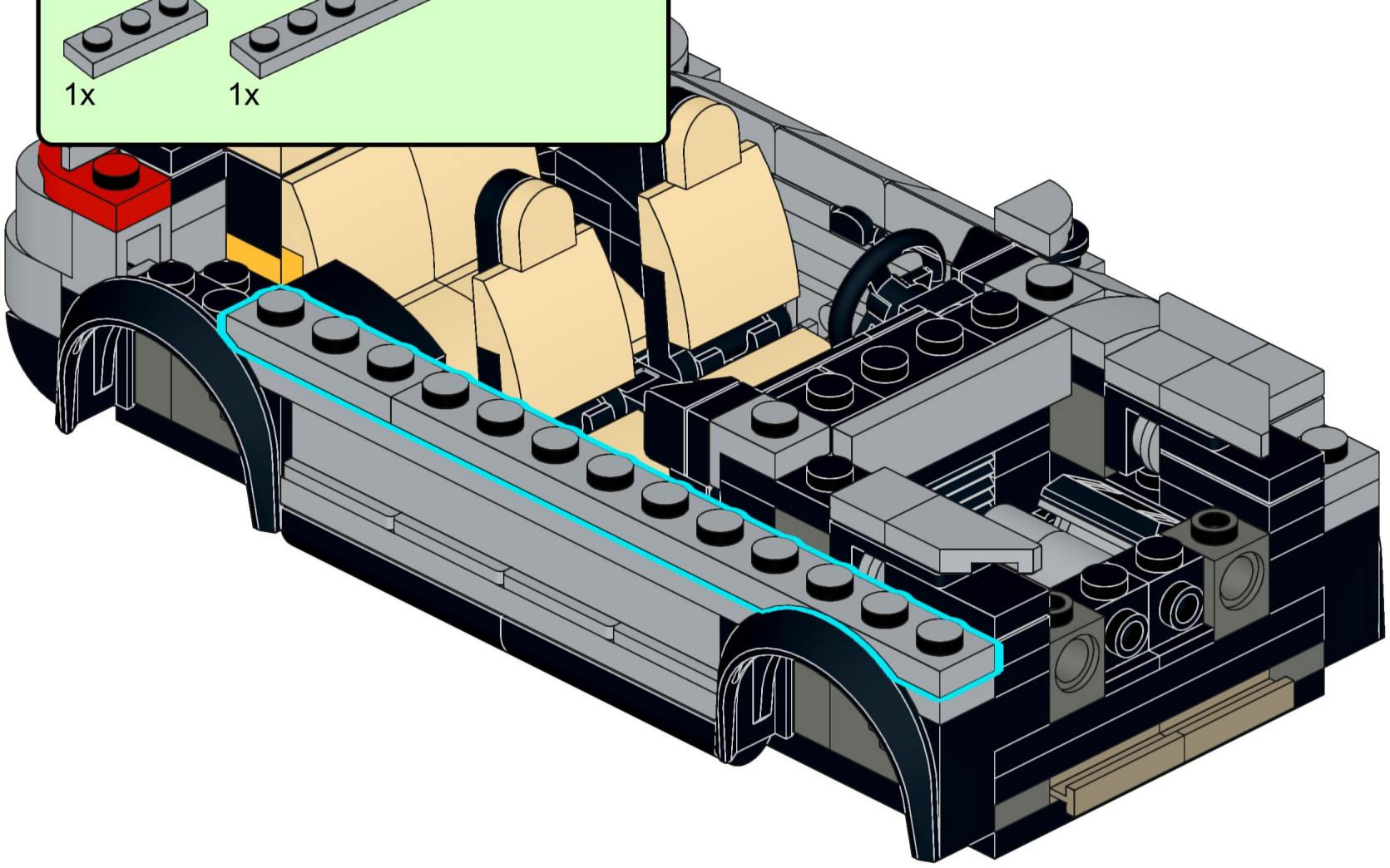

87

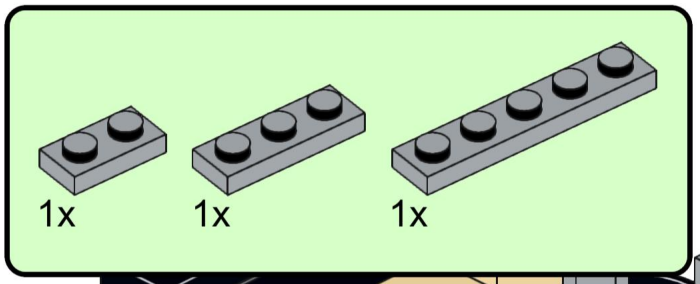

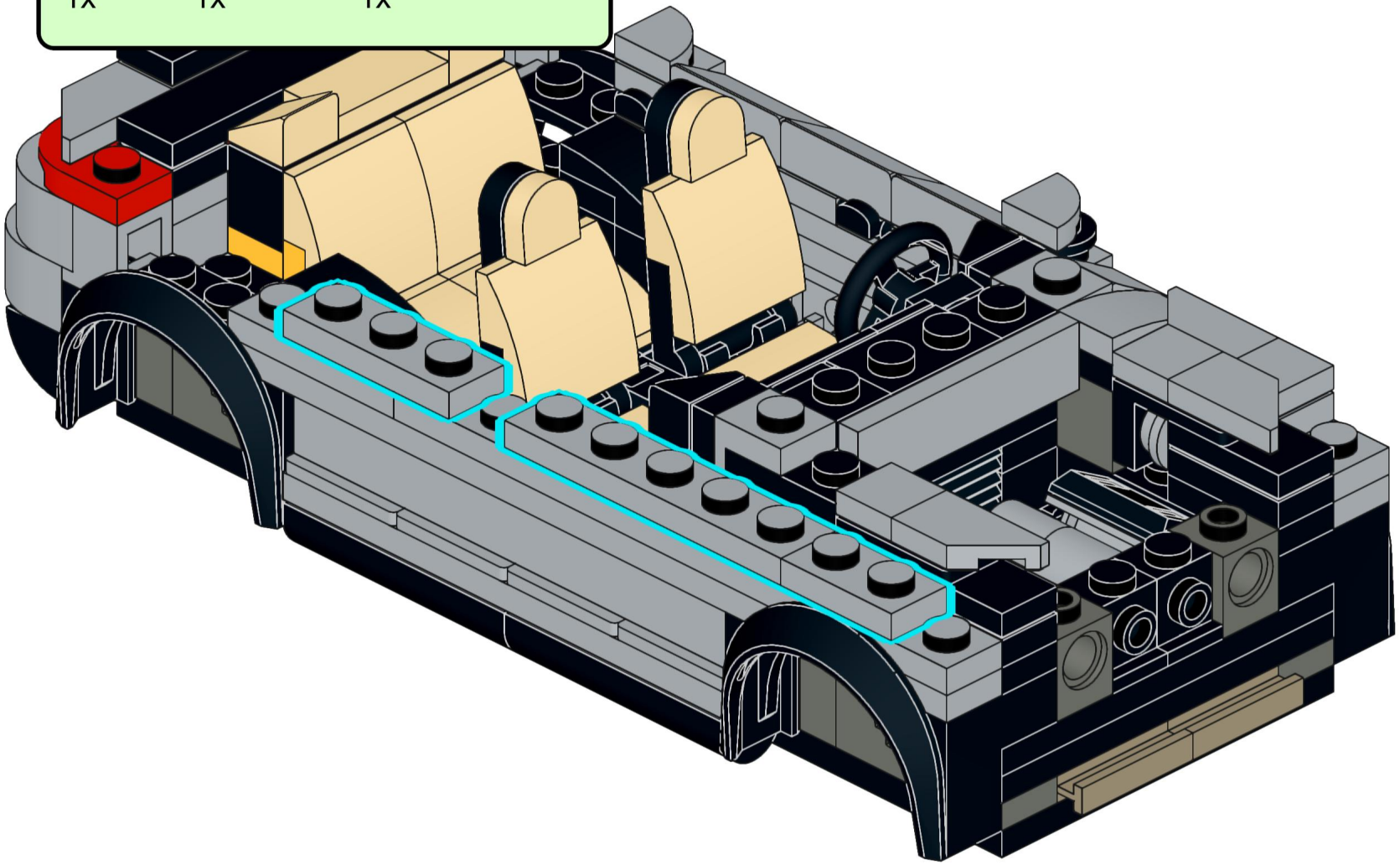

88

2x

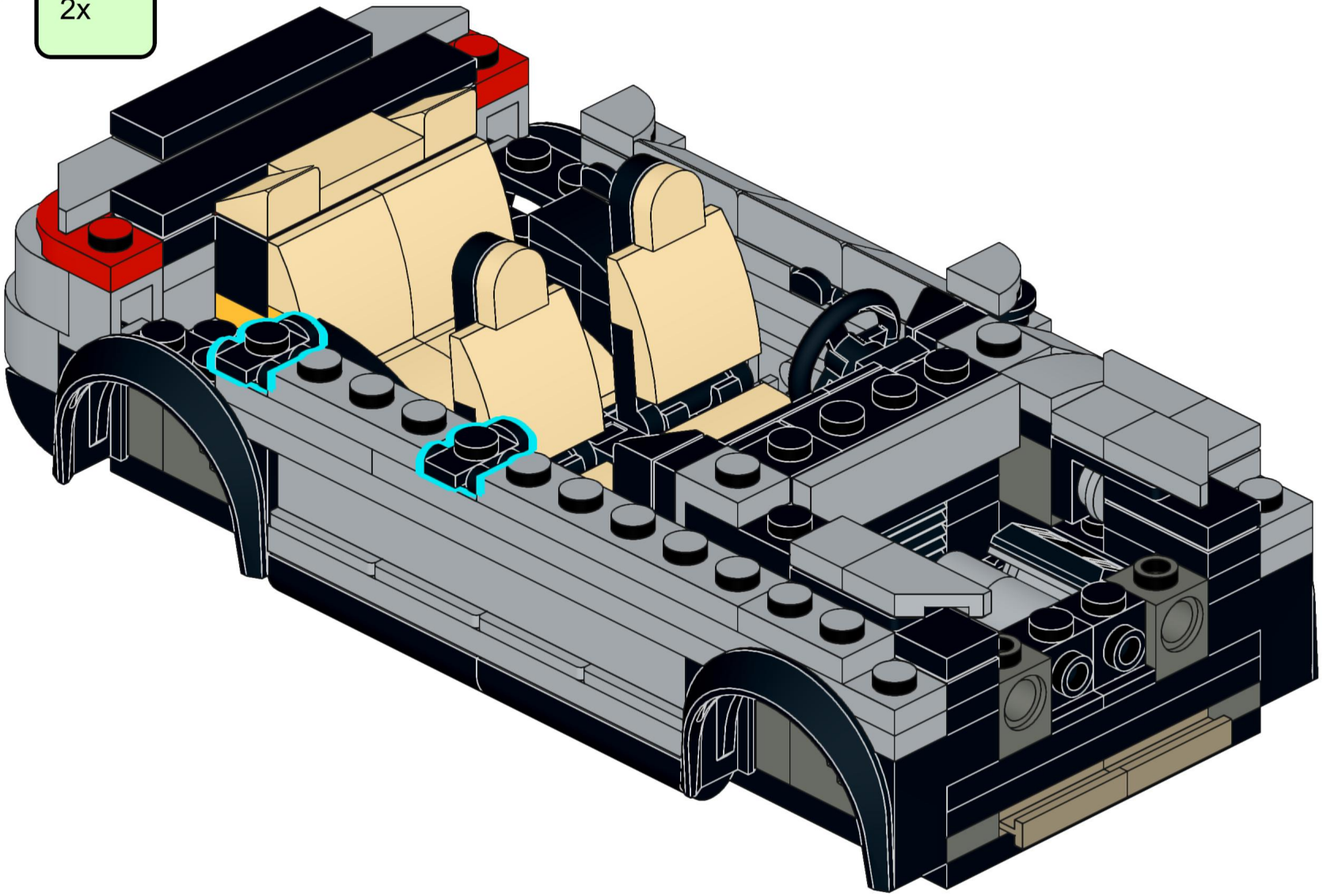

89

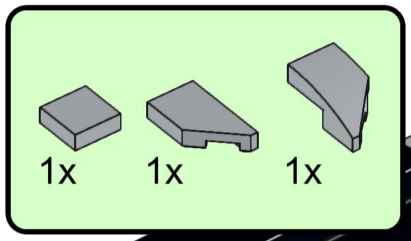

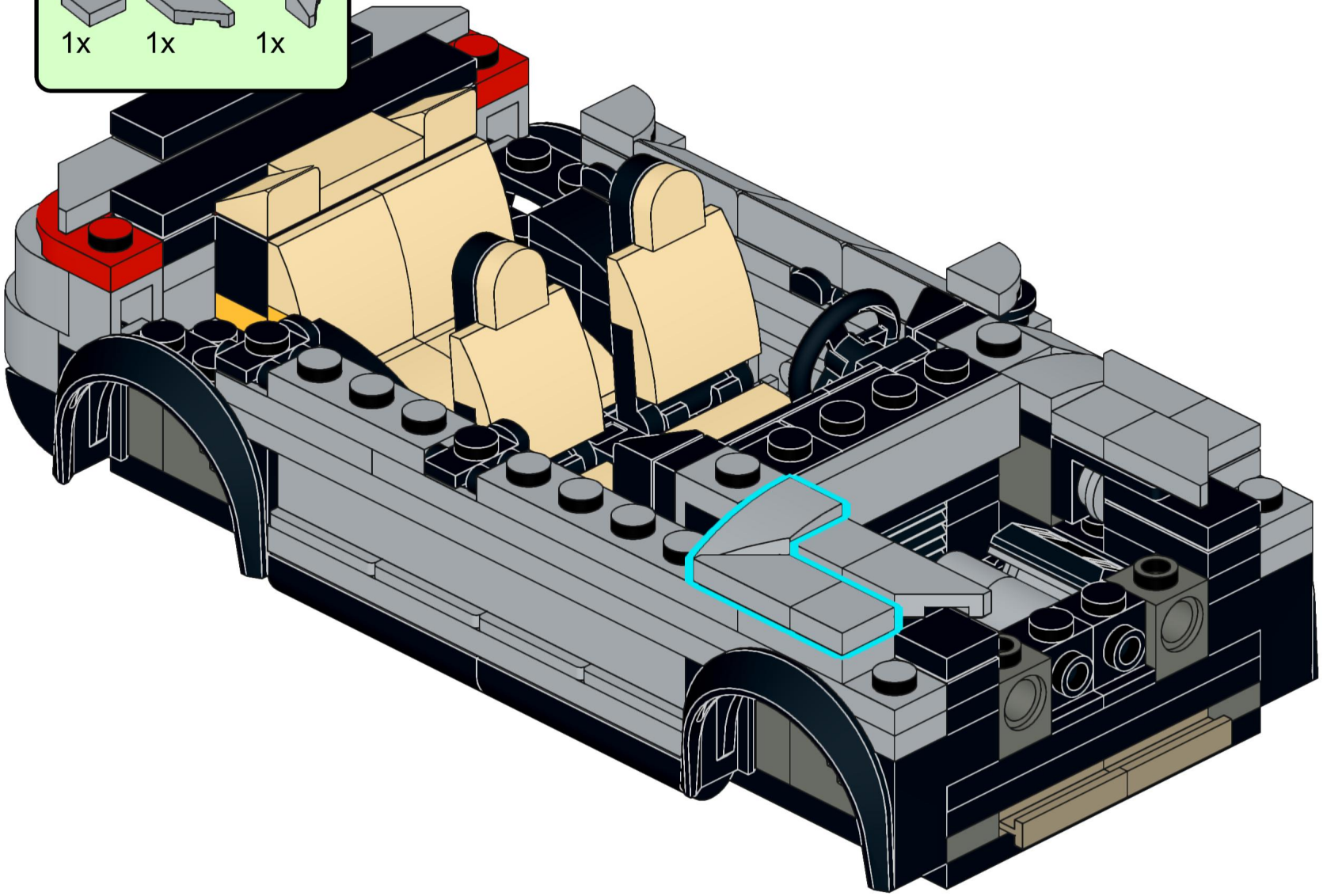

90

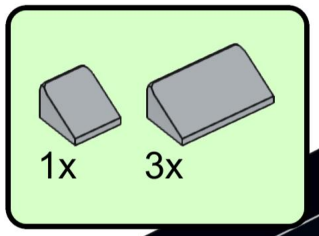

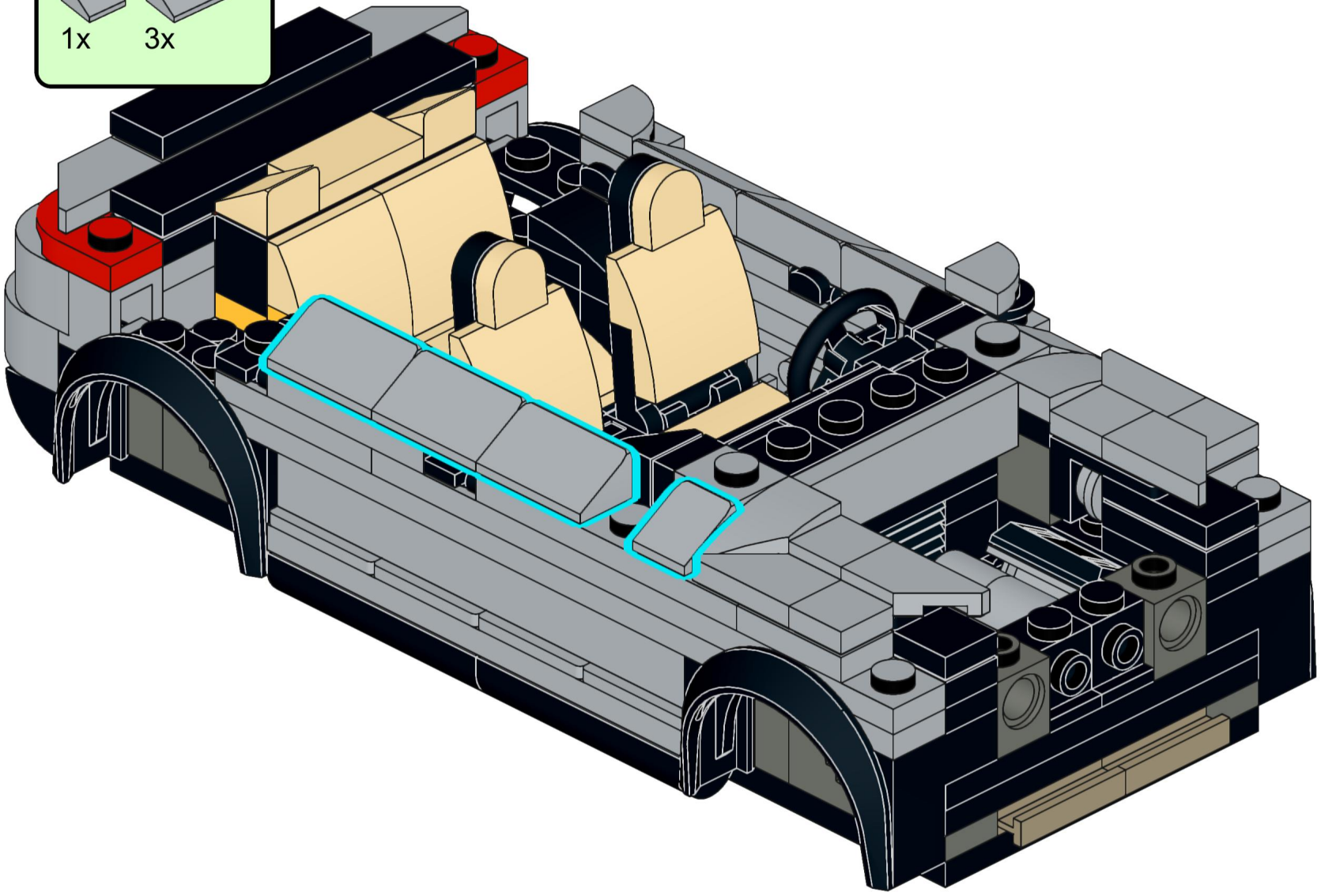

91

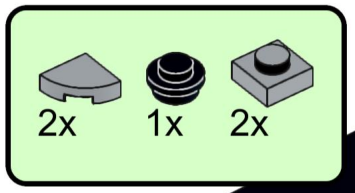

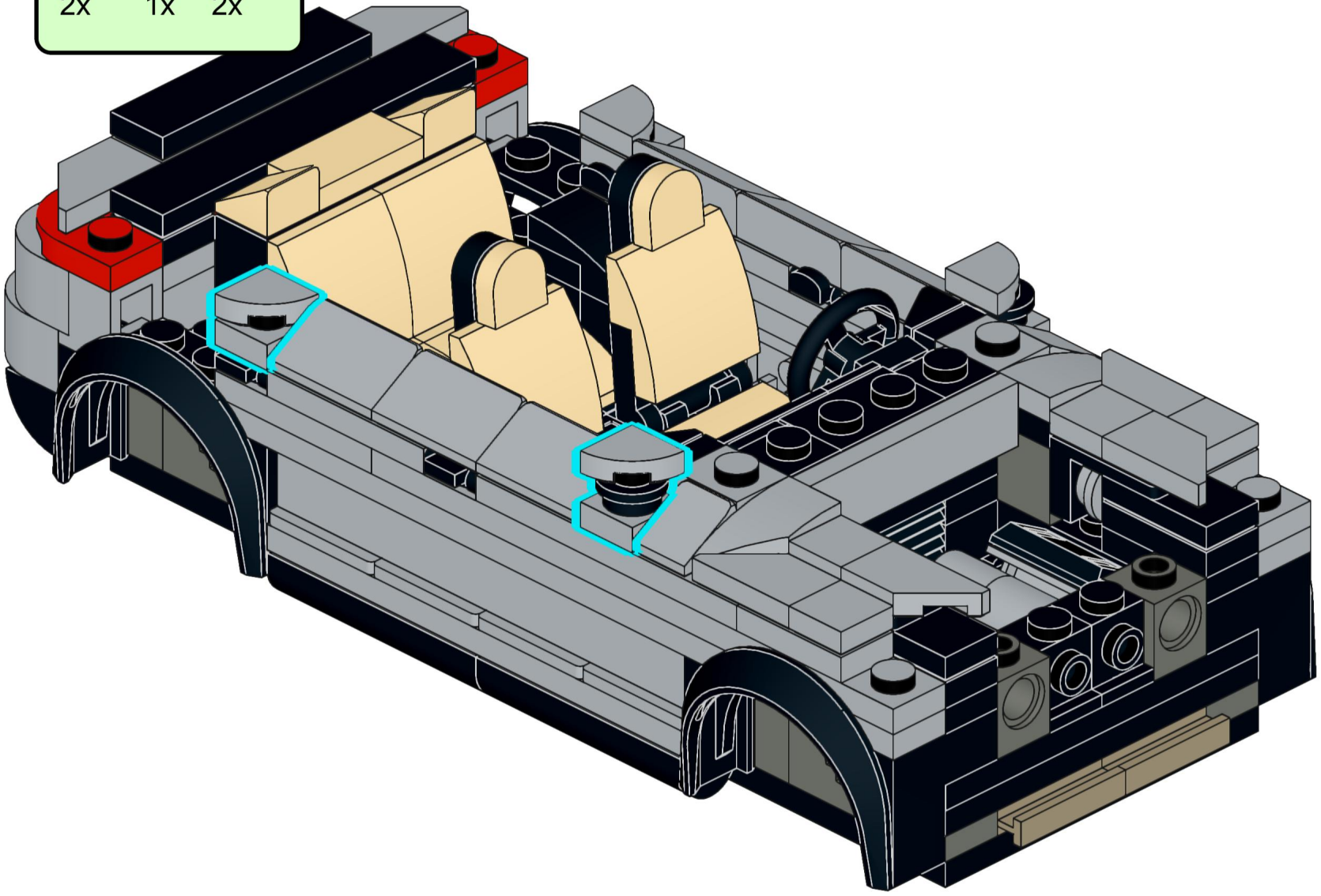

92

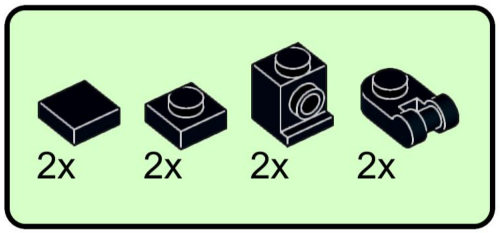

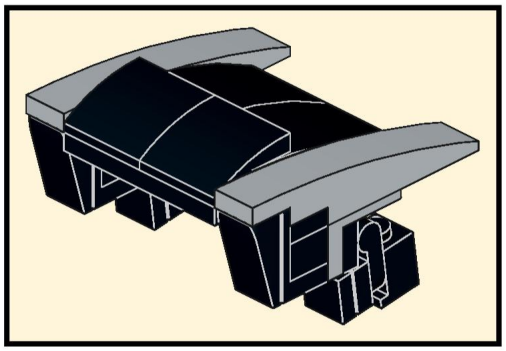

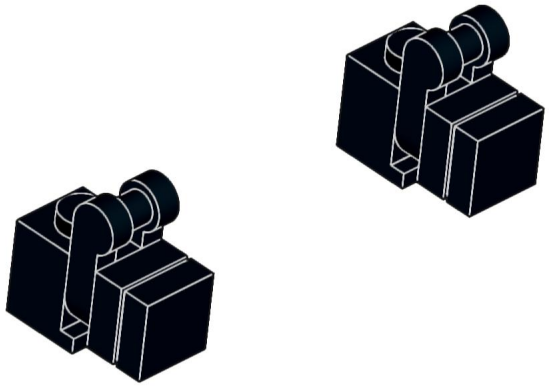

93

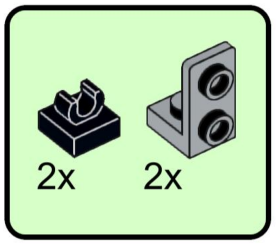

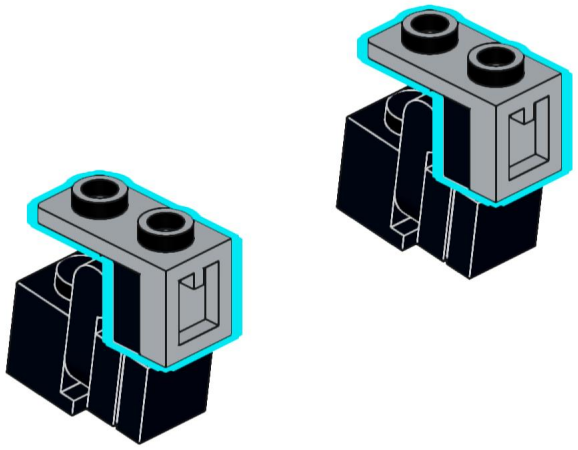

94

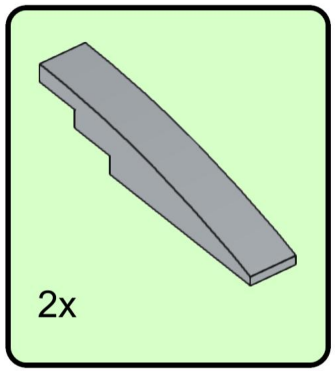

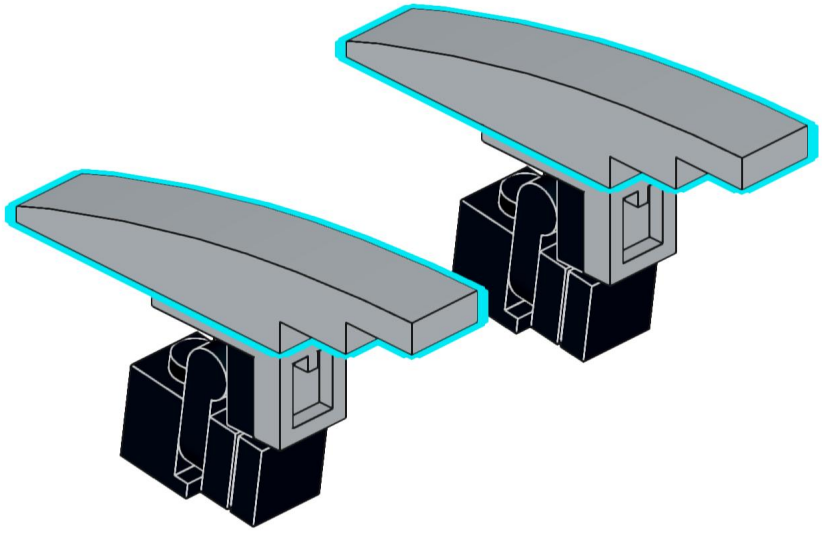

95

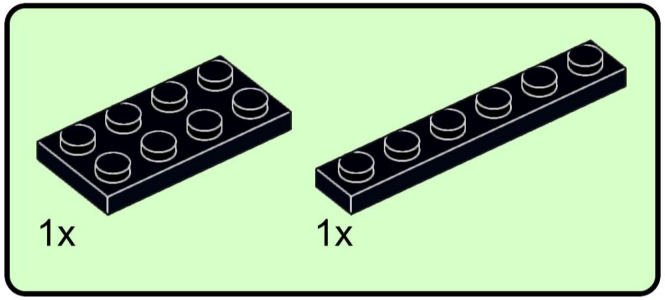

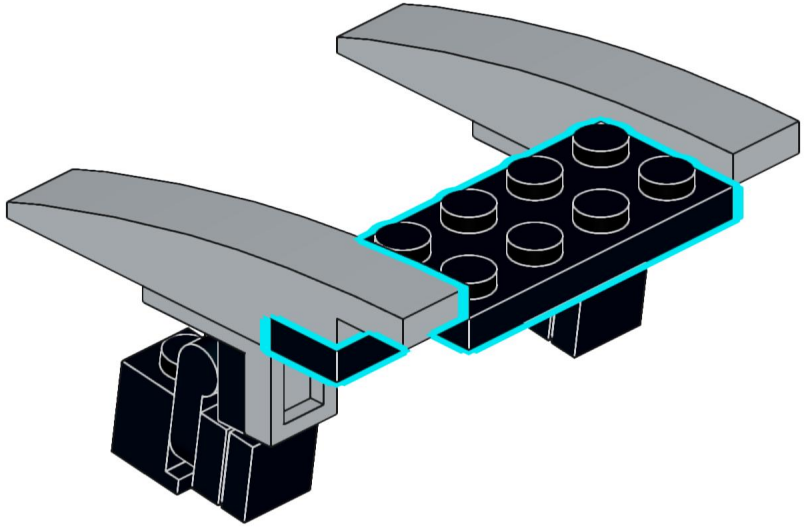

96

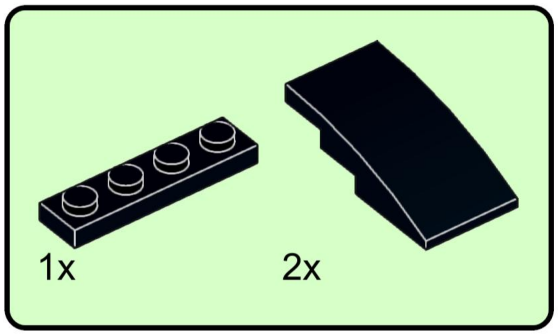

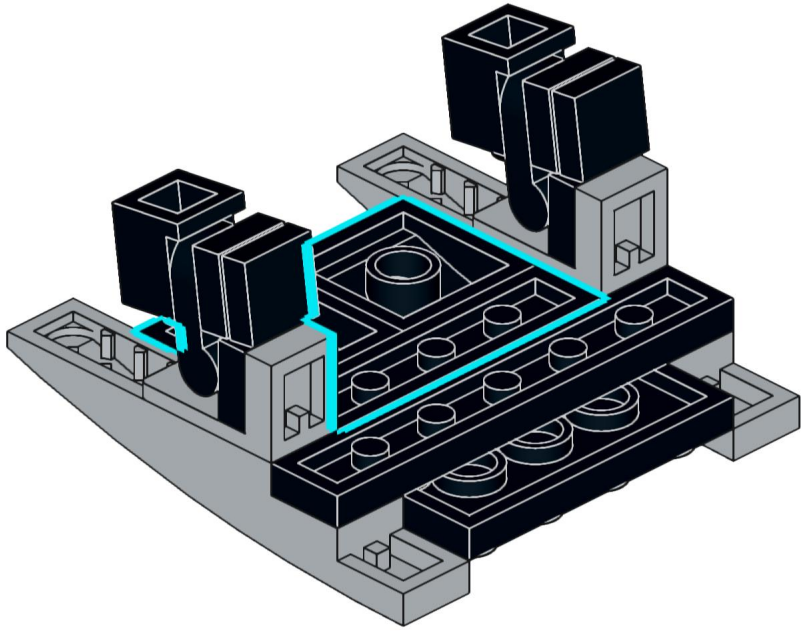

97

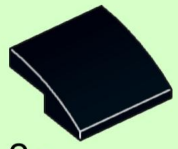

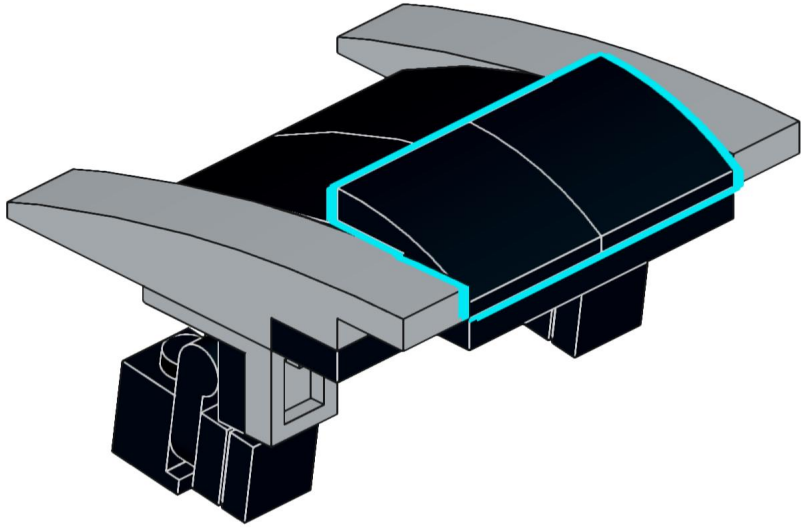

98

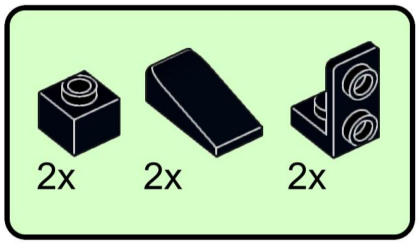

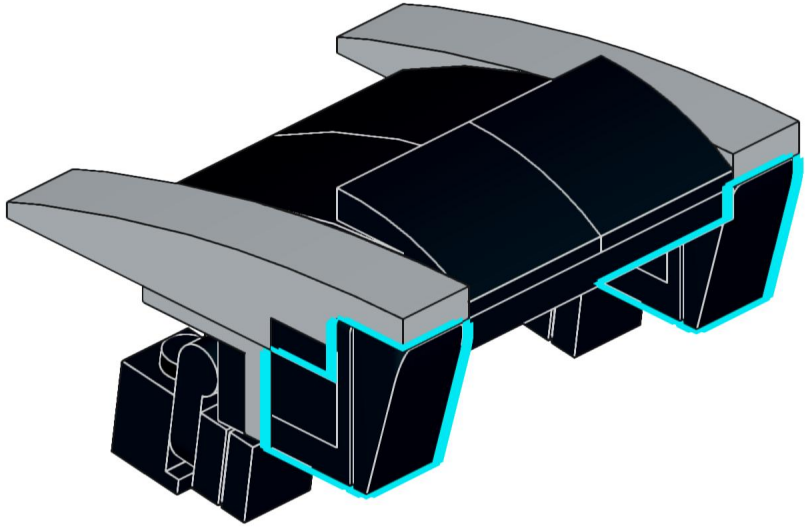

99

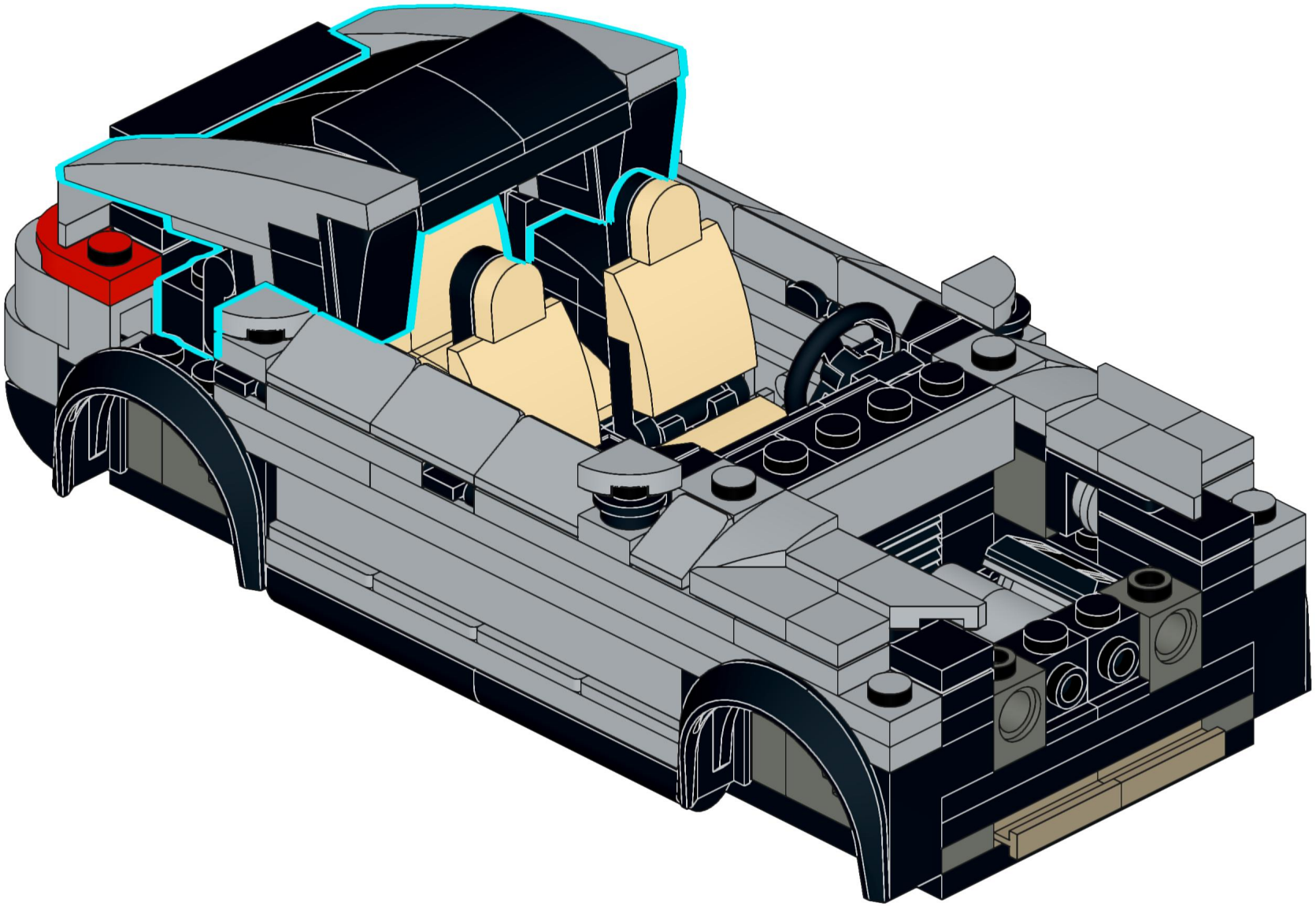

100

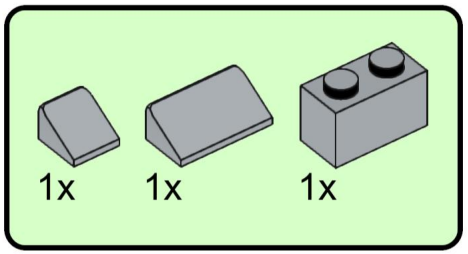

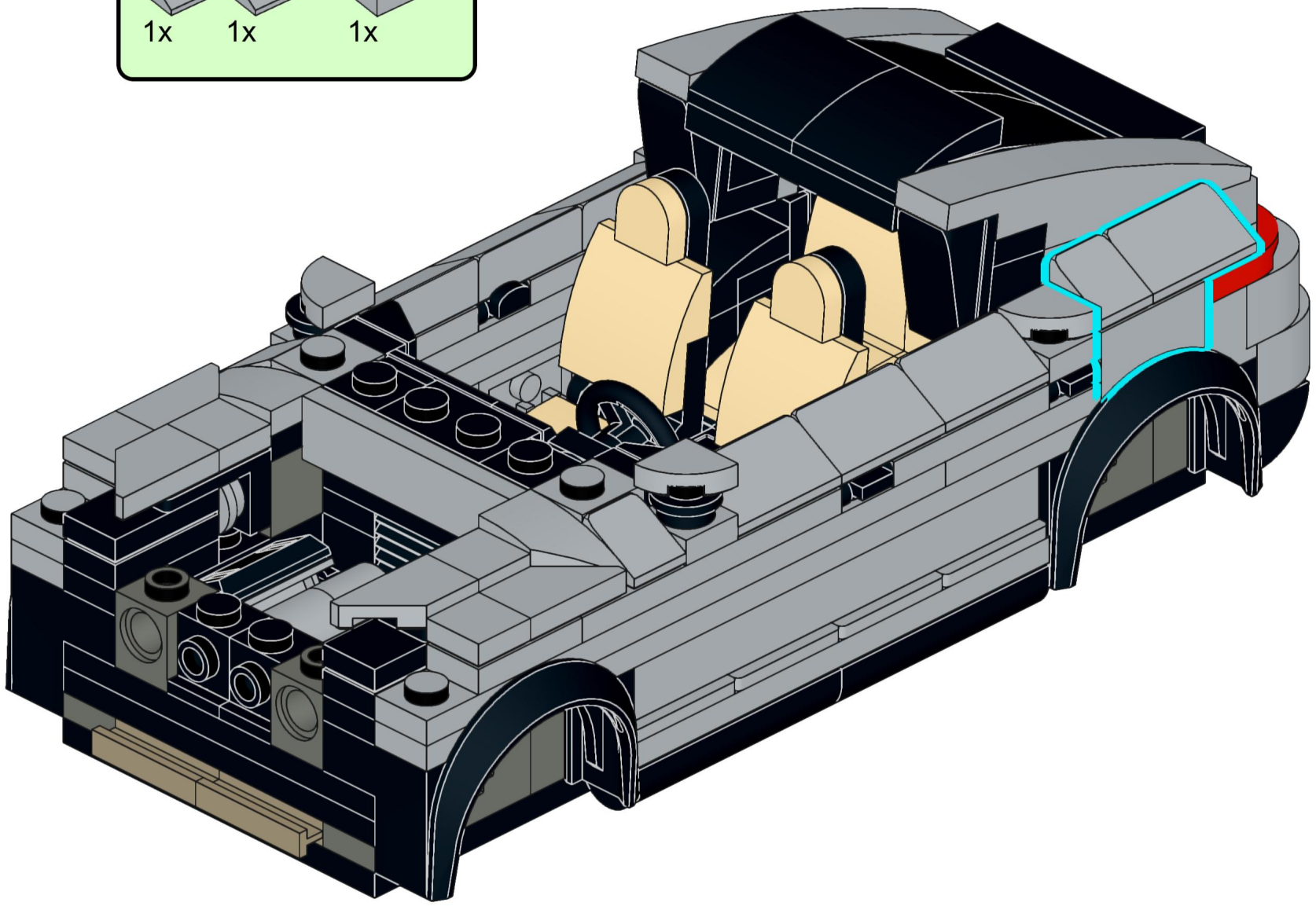

101

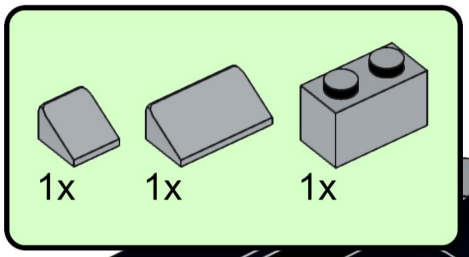

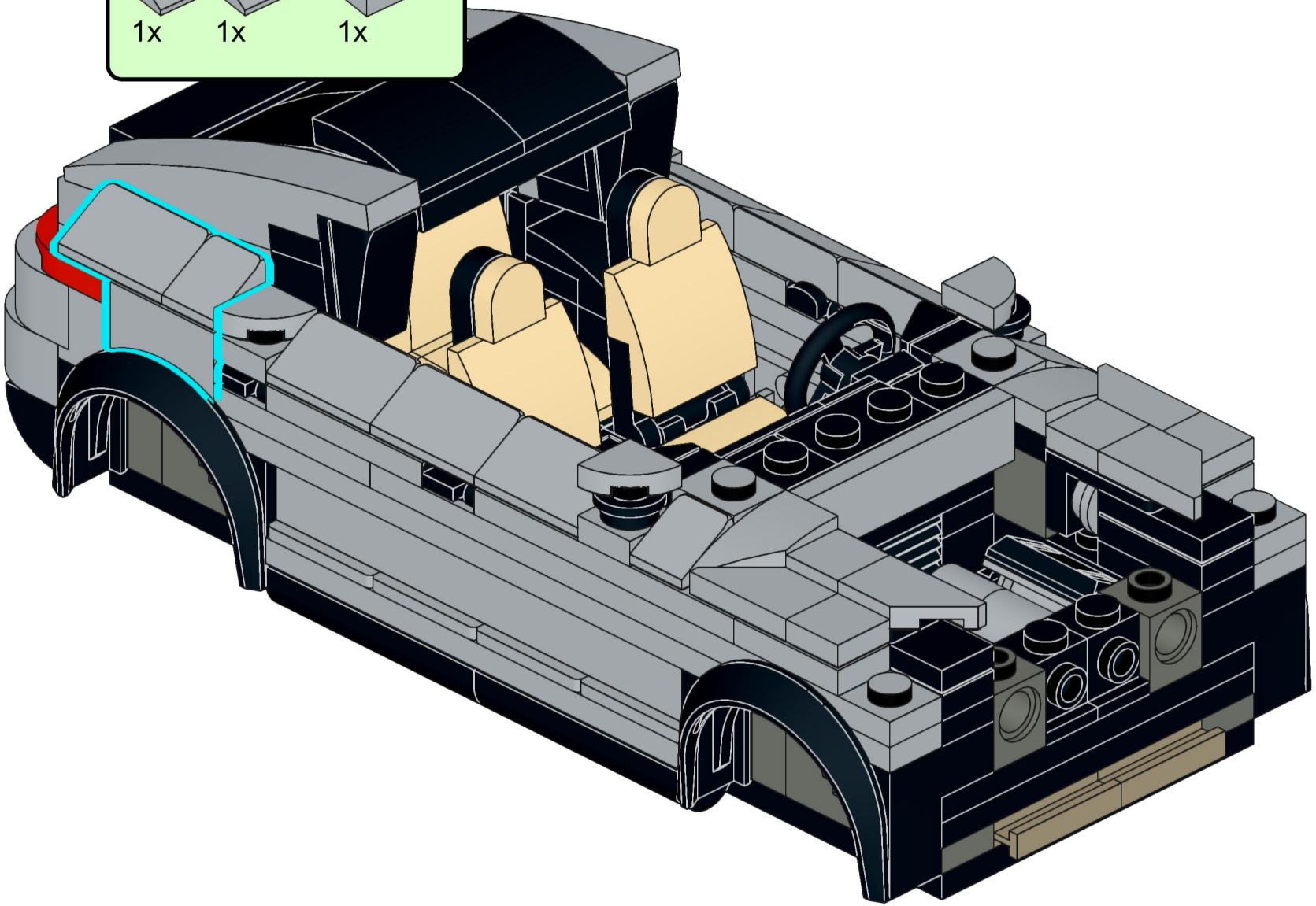

102

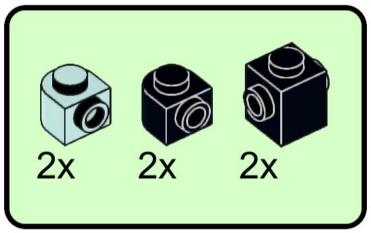

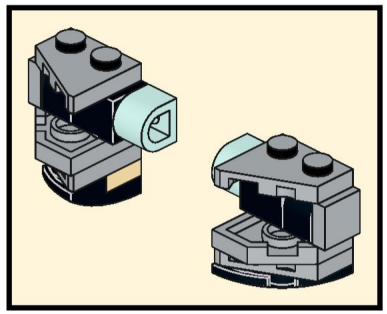

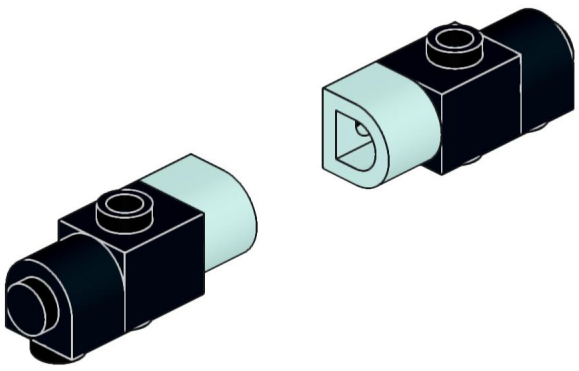

103

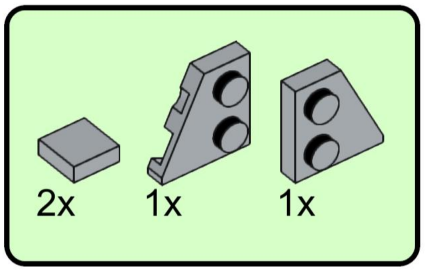

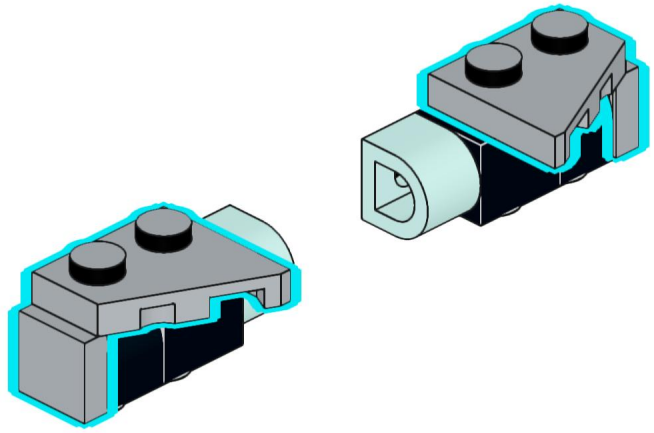

104

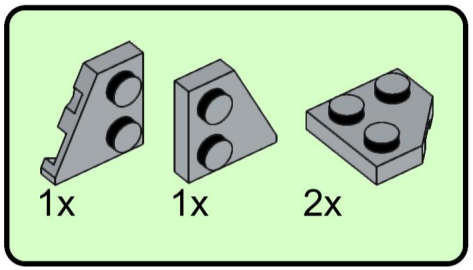

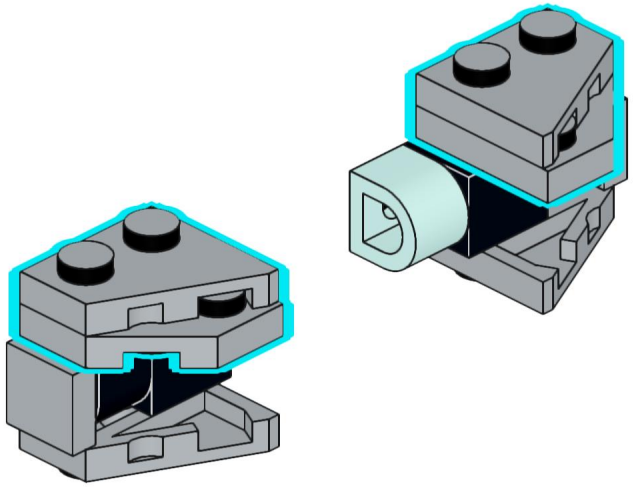

105

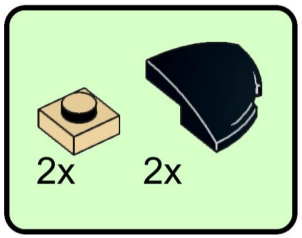

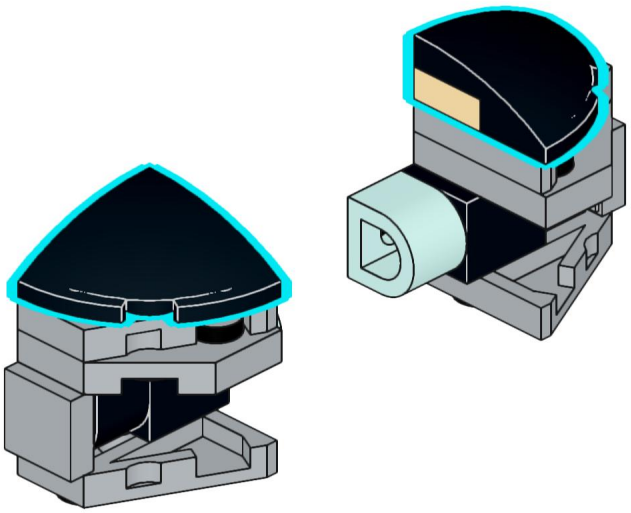

106

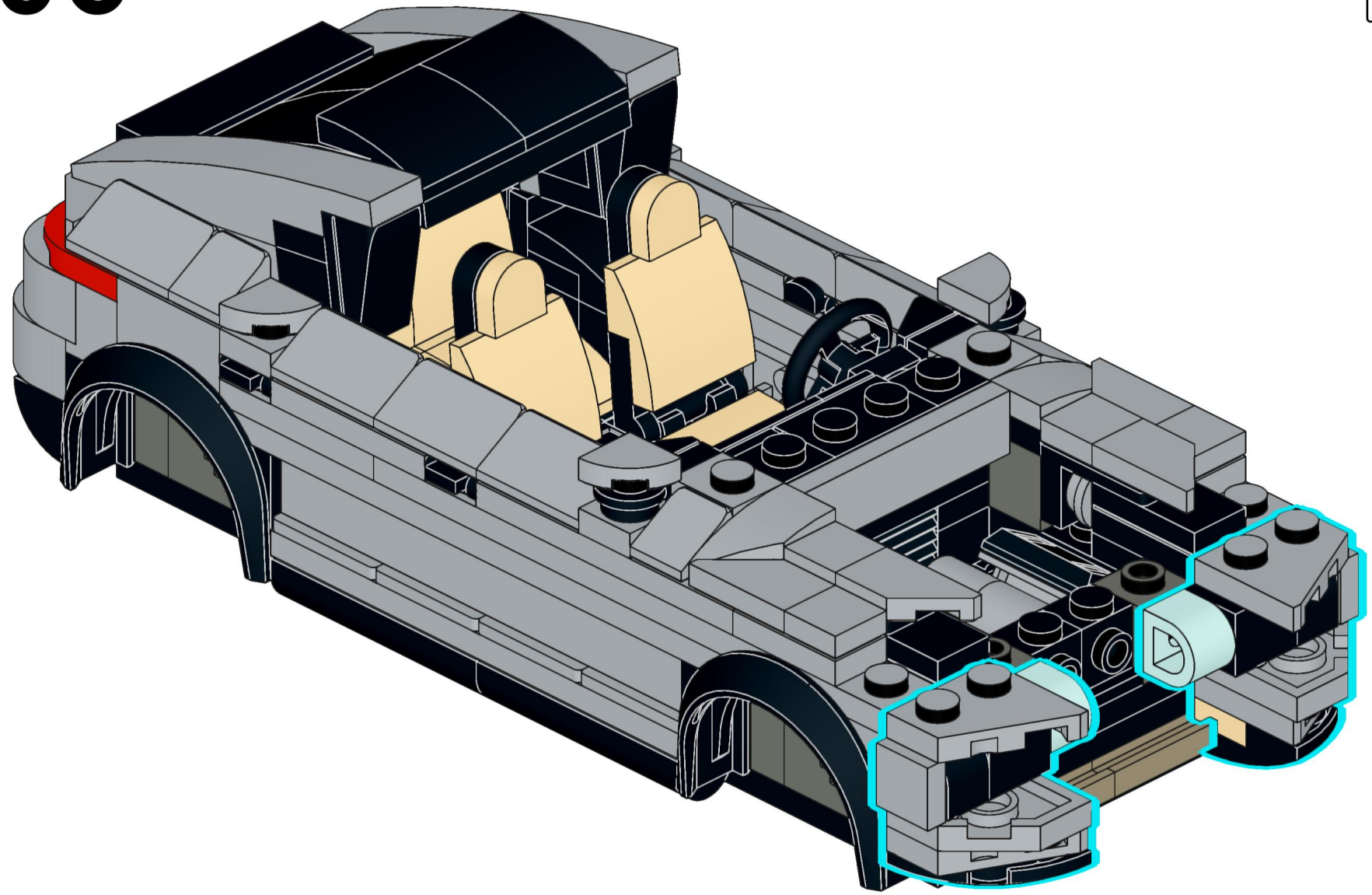

107

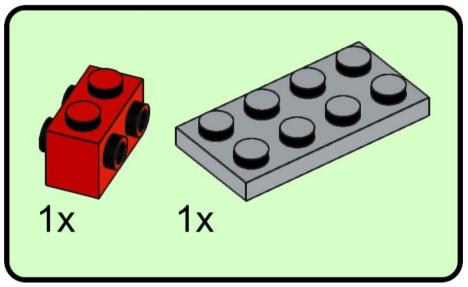

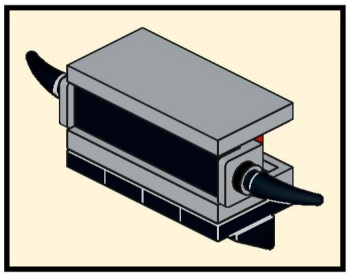

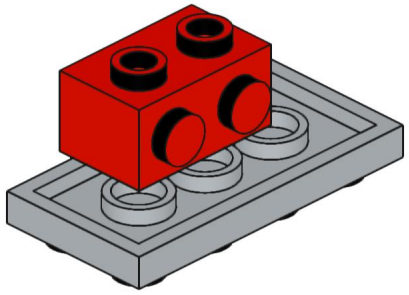

108

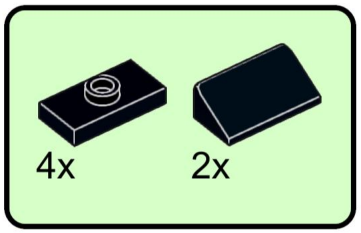

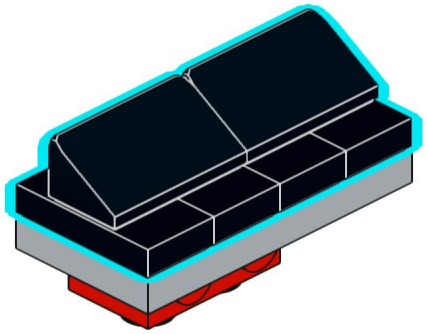

109

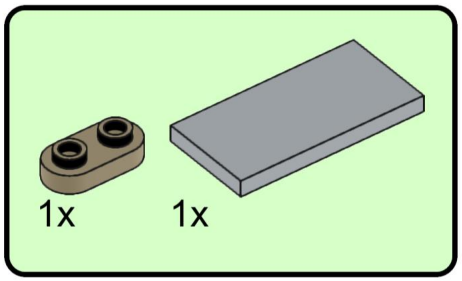

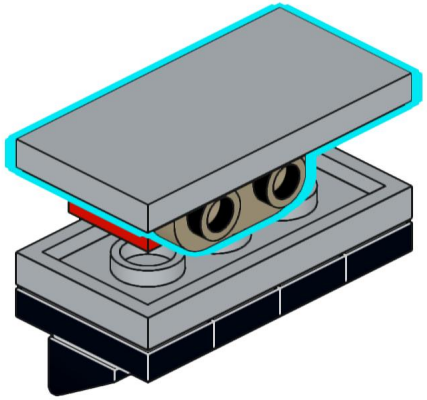

110

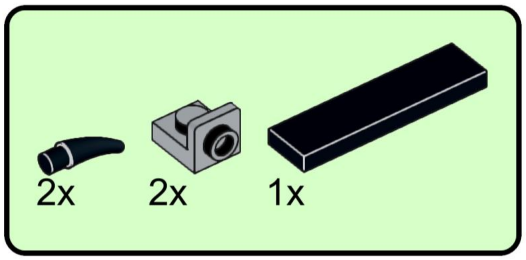

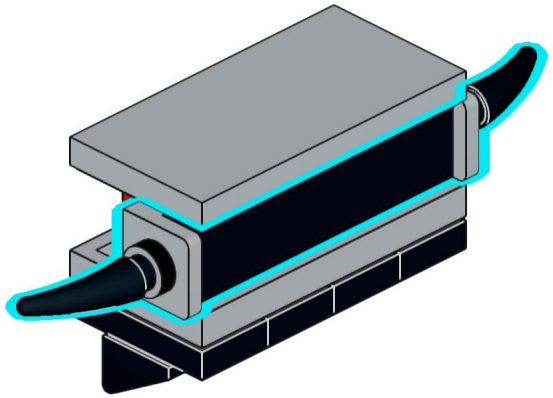

111

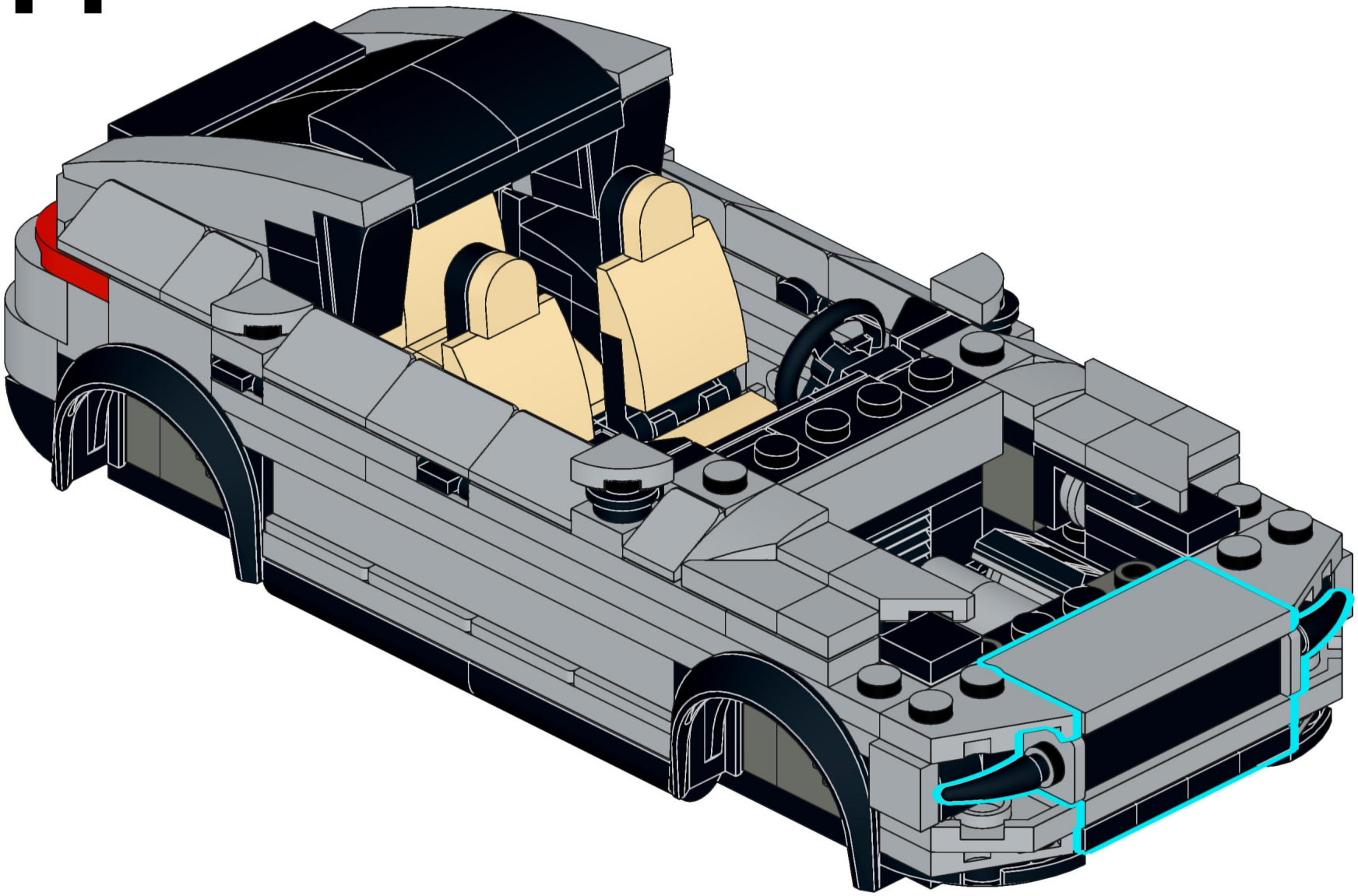

112

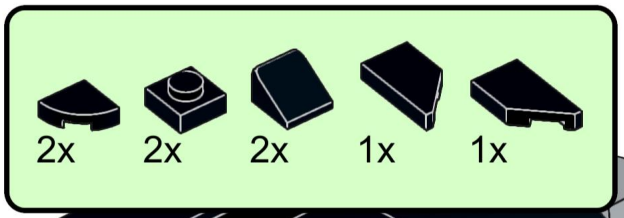

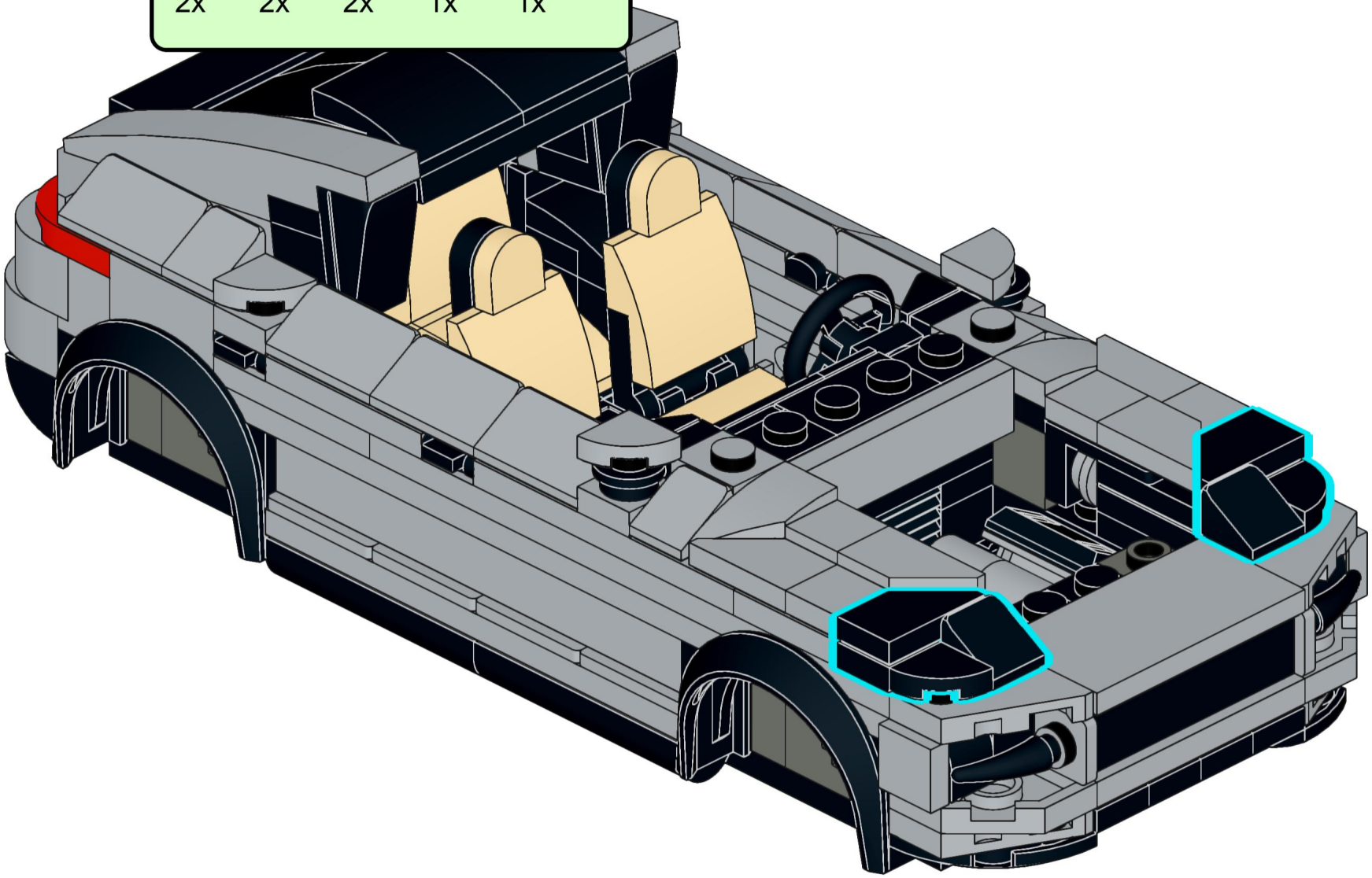

113

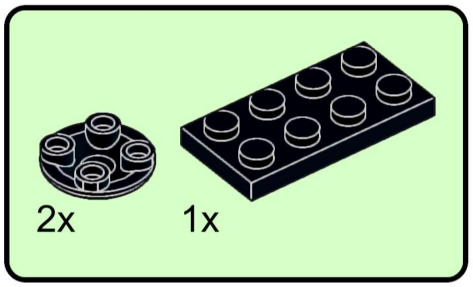

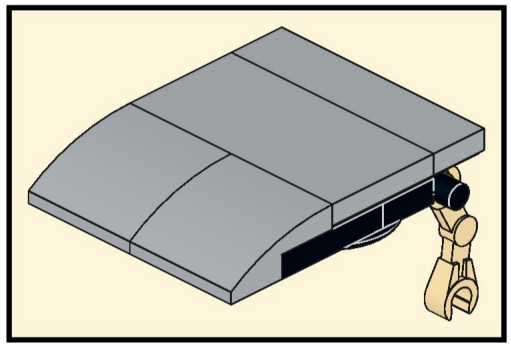

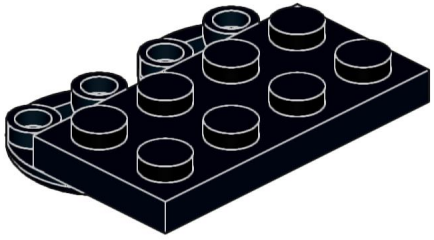

114

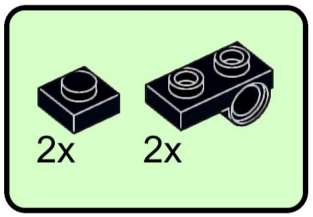

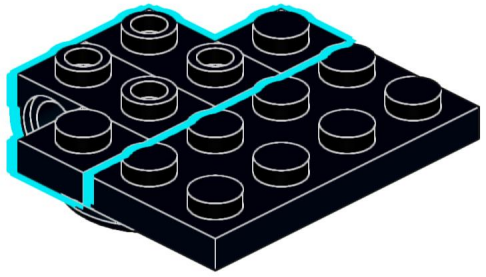

115

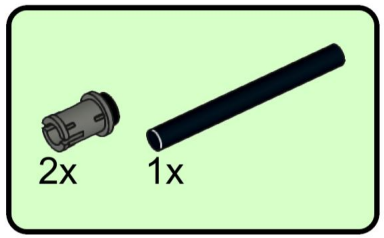

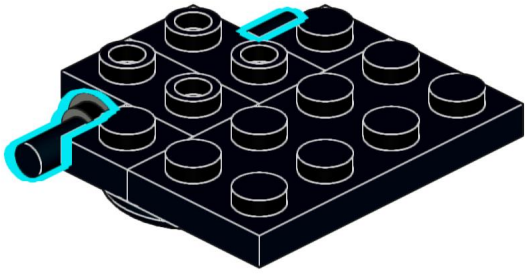

116

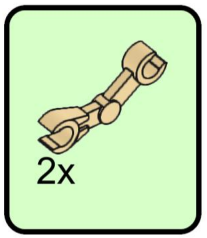



117

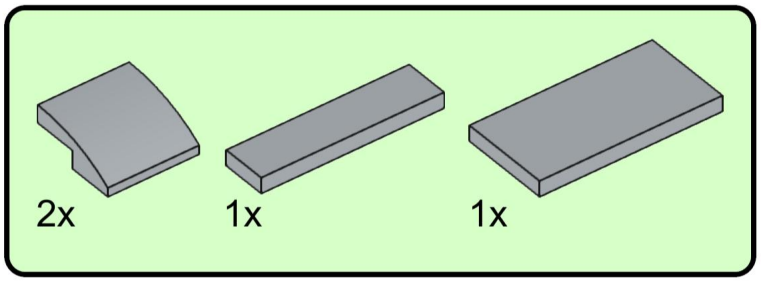

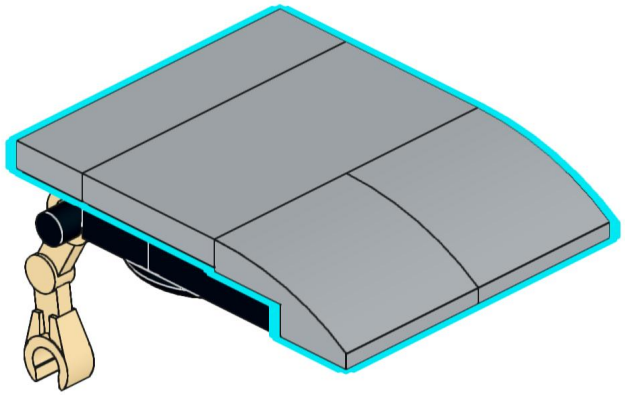

118

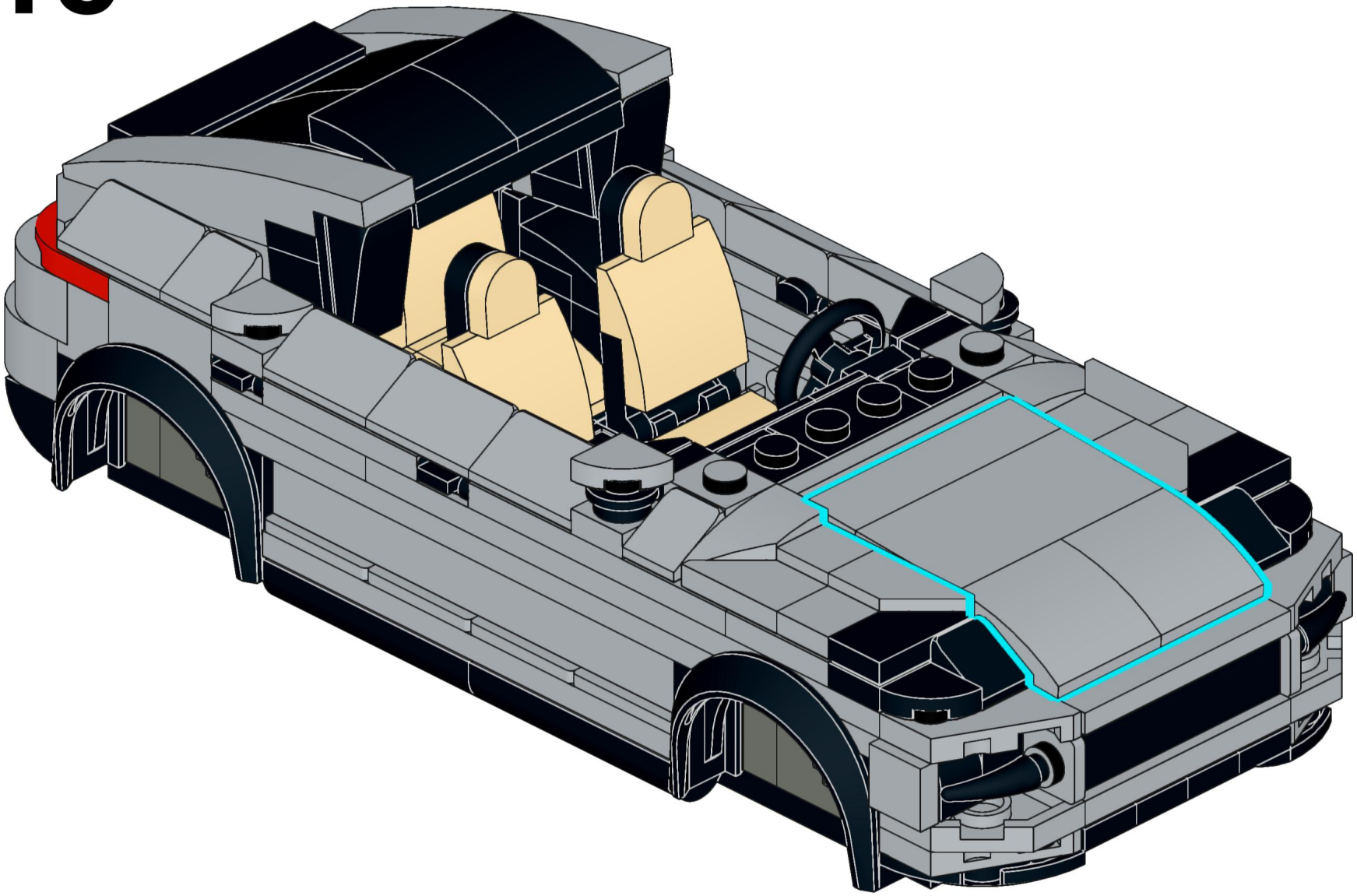

119

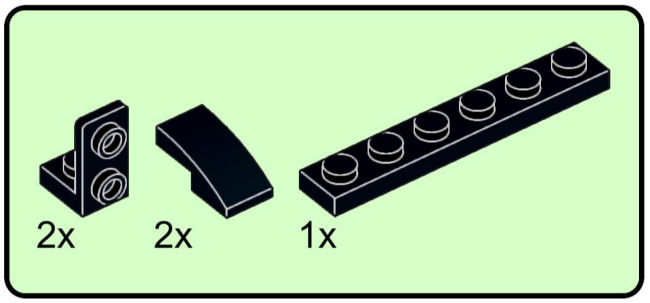

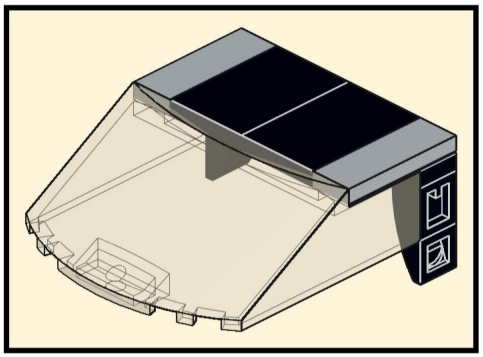

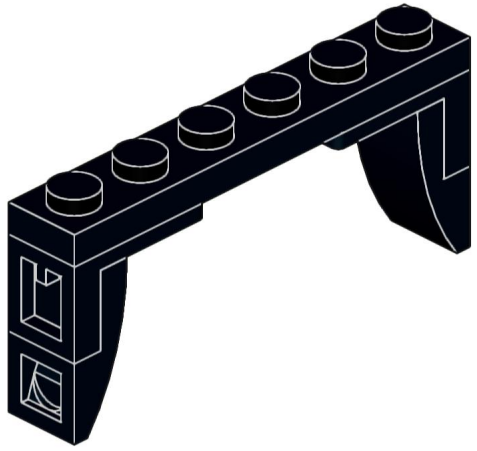

120

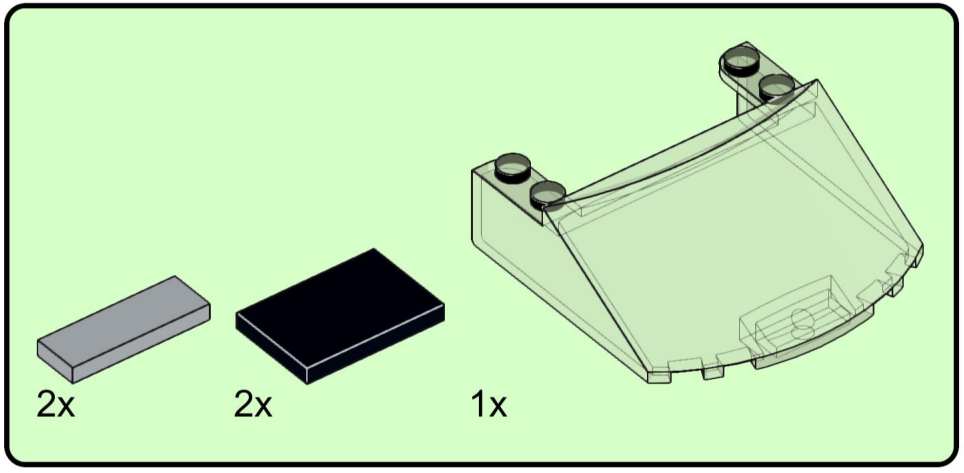

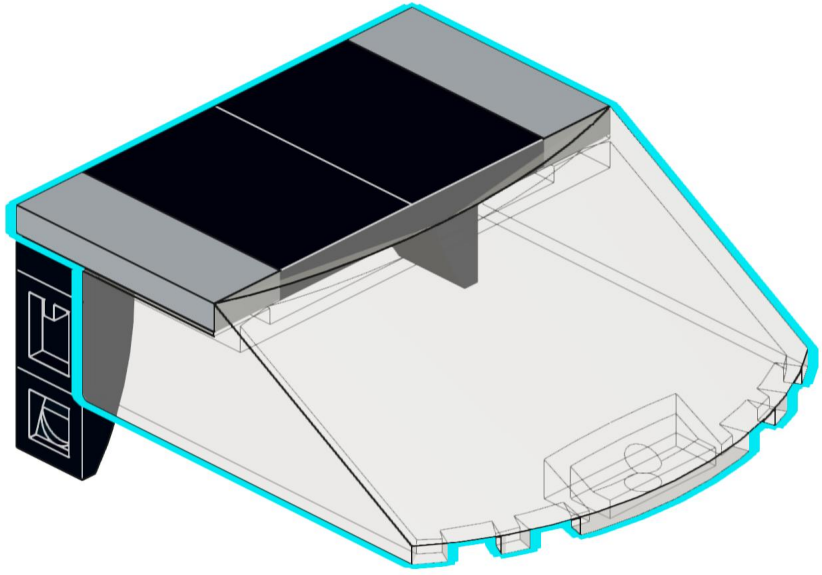

121

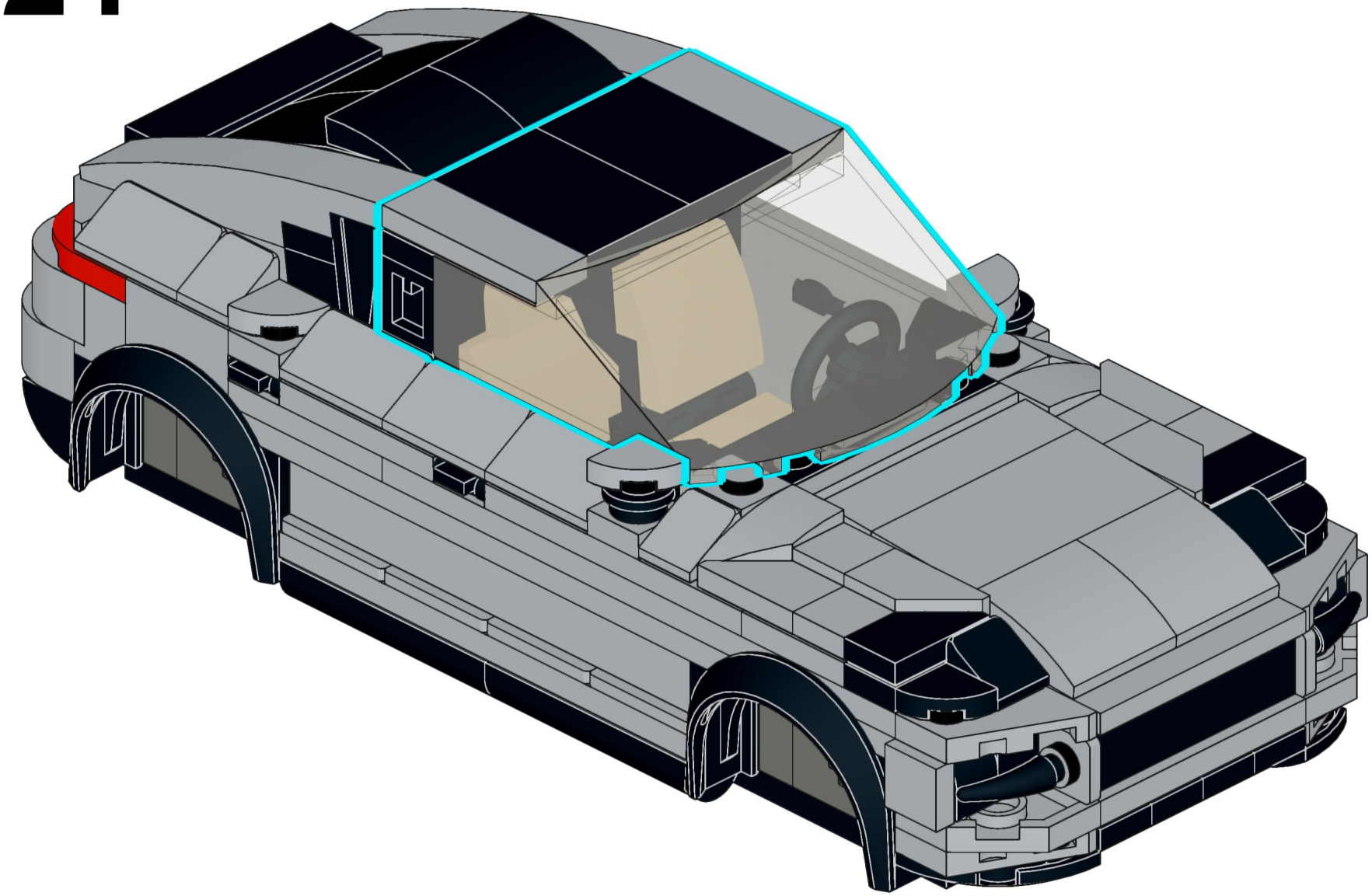

122

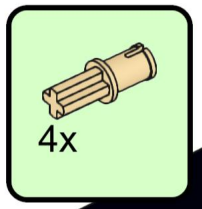

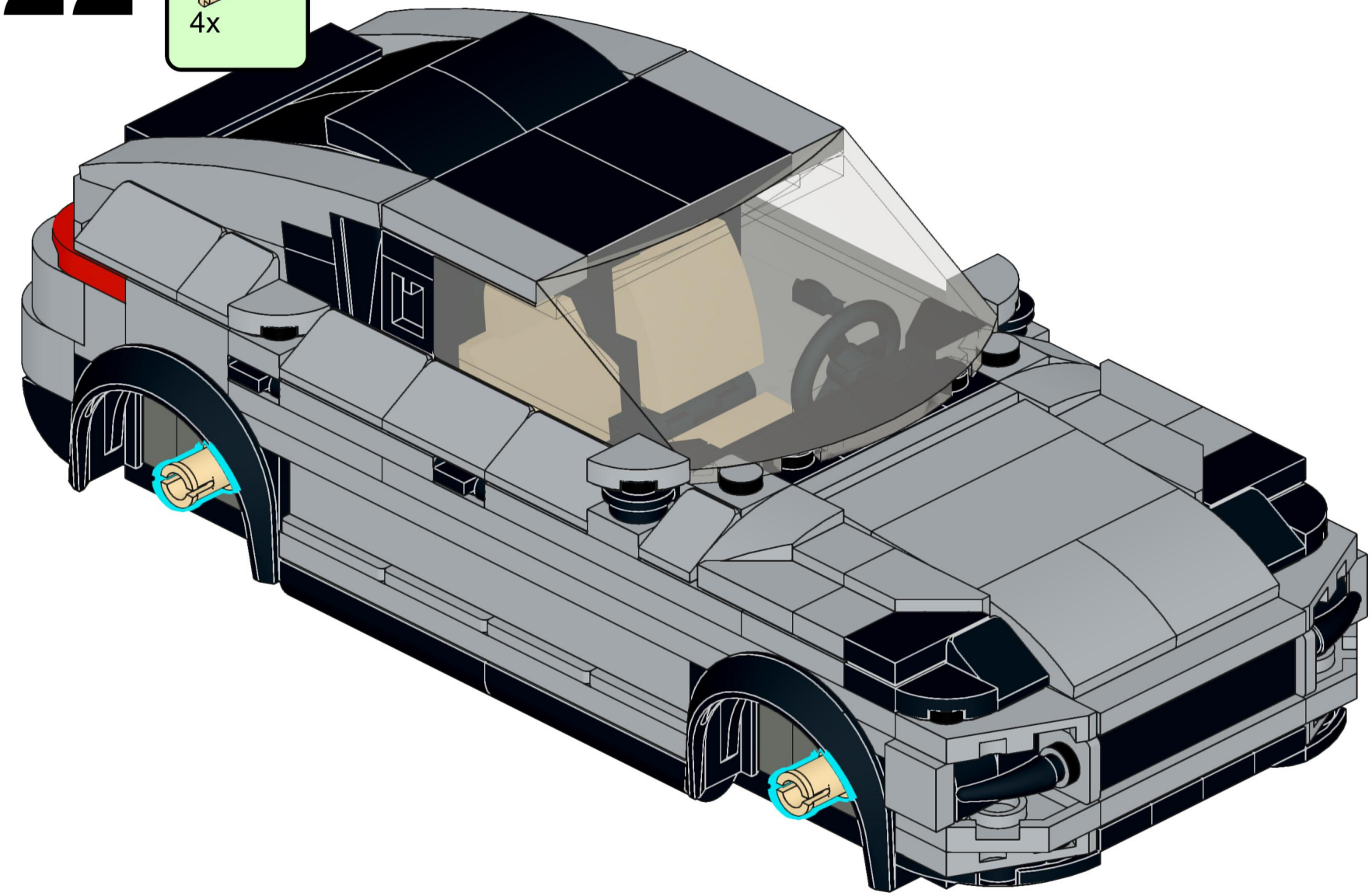

123

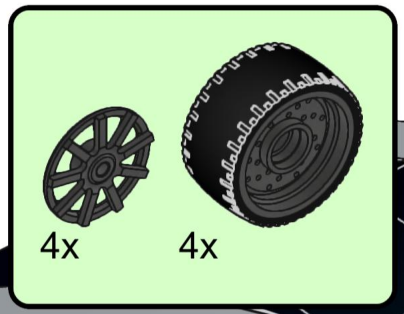

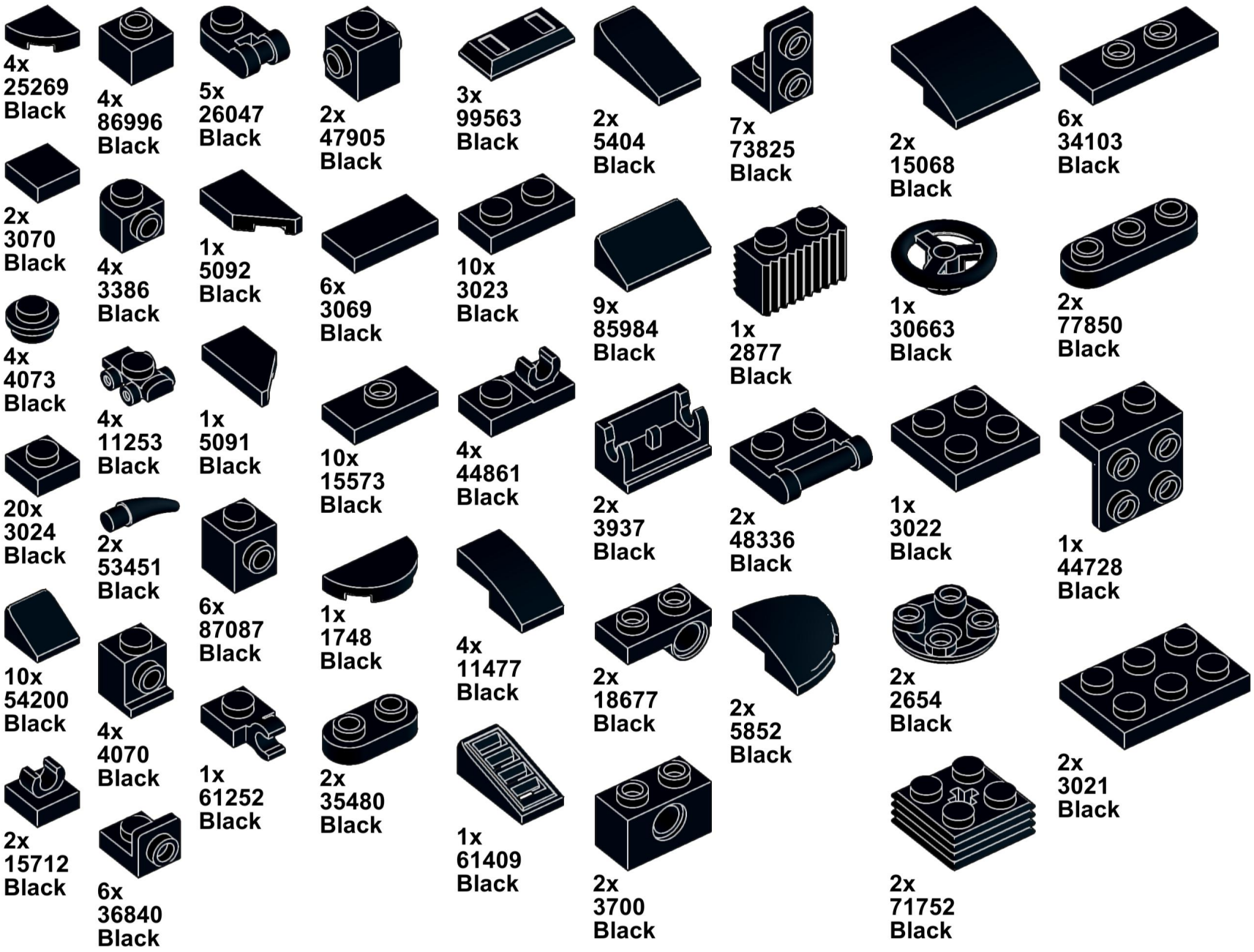
4x
25269
Black
4x
86996
Black
5x
26047
Black
2x
47905
Black
3x
99563
Black
2x
5404
Black
7x
73825
Black
2x
15068
Black
6x
34103
Black
2x
3070
Black
4x
3386
Black
1x
5092
Black
6x
3069
Black
10x
3023
Black
9x
85984
Black
1x
2877
Black
1x
30663
Black
2x
77850
Black
4x
4073
Black
4x
11253
Black
1x
5091
Black
10x
15573
Black
4x
44861
Black
2x
3937
Black
2x
48336
Black
1x
3022
Black
1x
44728
Black
20x
3024
Black
2x
53451
Black
6x
87087
Black
1x
1748
Black
4x
11477
Black
2x
18677
Black
2x
5852
Black
2x
2654
Black
2x
3021
Black
10x
54200
Black
4x
4070
Black
1x
61252
Black
2x
35480
Black
1x
61409
Black
2x
3700
Black
2x
71752
Black
2x
15712
Black
6x
36840
Black



2x
26603
Black



1x
30374
Black



3x
2431
Black



4x
79756
Black



5x
3710
Black

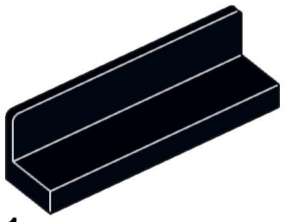

1x
30413
Black

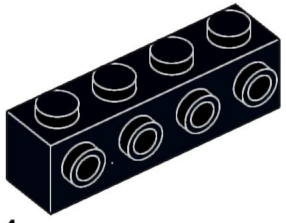

1x
30414
Black



2x
3020
Black

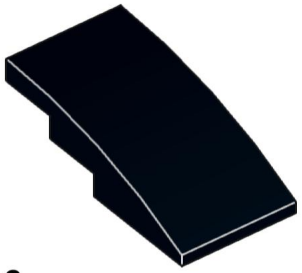

2x
93606
Black



1x
78329
Black

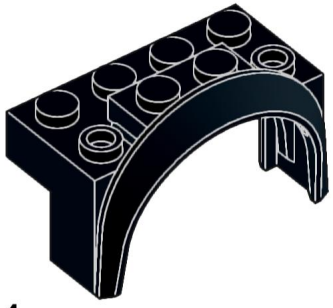

4x
3387
Black



2x
6636
Black



6x
3666
Black

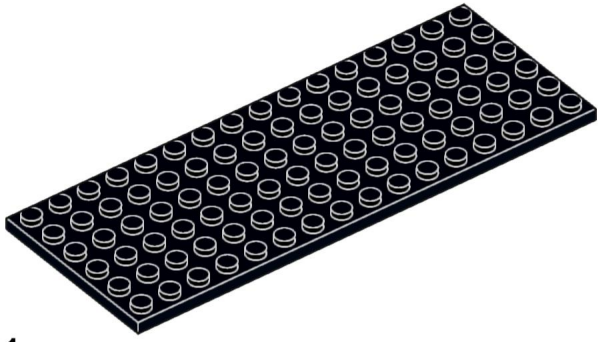

1x
3027
Black



2x
85861
Dark Bluish Gray

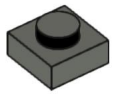

3x
3024
Dark Bluish Gray



2x
89678
Dark Bluish Gray



2x
6541
Dark Bluish Gray

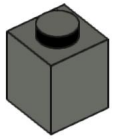

4x
3005
Dark Bluish Gray



4x
87087
Dark Bluish Gray



1x
35480
Dark Bluish Gray

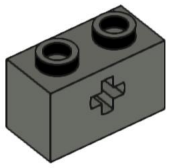

4x
32064
Dark Bluish Gray

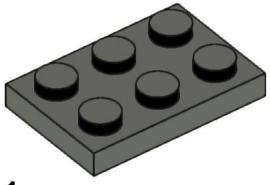

1x
3021
Dark Bluish Gray

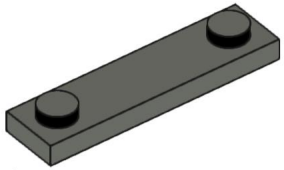

1x
41740
Dark Bluish Gray

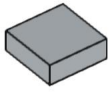

6x
3070
Light Bluish Gray



4x
25269
Light Bluish Gray



2x
85861
Light Bluish Gray

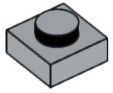

6x
3024
Light Bluish Gray



2x
4073
Light Bluish Gray

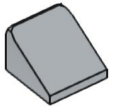

4x
54200
Light Bluish Gray

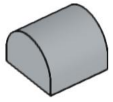

2x
49307
Light Bluish Gray

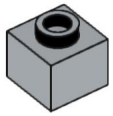

2x
86996
Light Bluish Gray

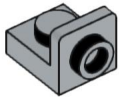

2x
36840
Light Bluish Gray

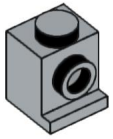

2x
4070
Light Bluish Gray

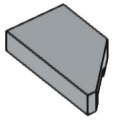

4x
5091
Light Bluish Gray

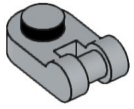

1x
26047
Light Bluish Gray

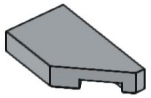

4x
5092
Light Bluish Gray

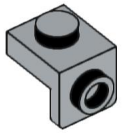

5x
36841
Light Bluish Gray

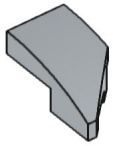

1x
29120
Light Bluish Gray

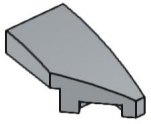

1x
29119
Light Bluish Gray

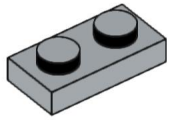

2x
3023
Light Bluish Gray

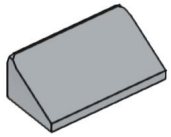

8x
85984
Light Bluish Gray

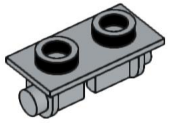

2x
3938
Light Bluish Gray

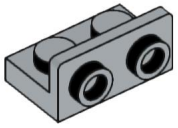

8x
99780
Light Bluish Gray

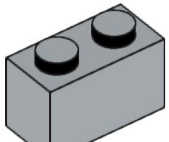

2x
3004
Light Bluish Gray

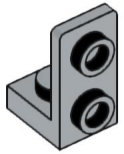

2x
73825
Light Bluish Gray

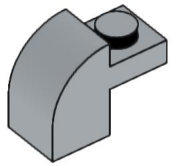

4x
6091
Light Bluish Gray

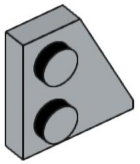

2x
24307
Light Bluish Gray

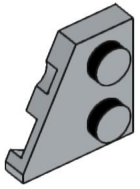

2x
24299
Light Bluish Gray

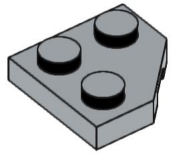

2x
26601
Light Bluish Gray

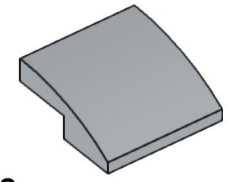

2x
15068
Light Bluish Gray

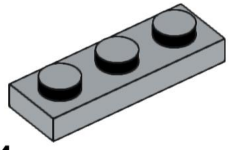

4x
3623
Light Bluish Gray

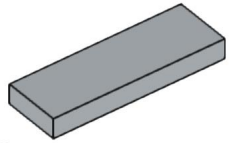

2x
63864
Light Bluish Gray

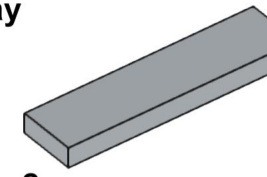

2x
2431
Light Bluish Gray

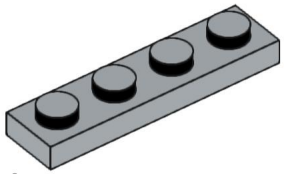

1x
3710
Light Bluish Gray

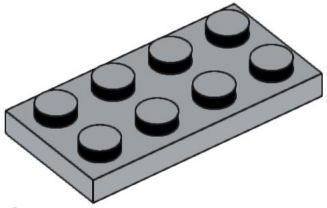

1x
3020
Light Bluish Gray

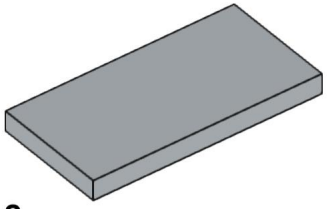

2x
87079
Light Bluish Gray

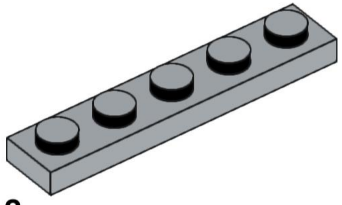

2x
78329
Light Bluish Gray

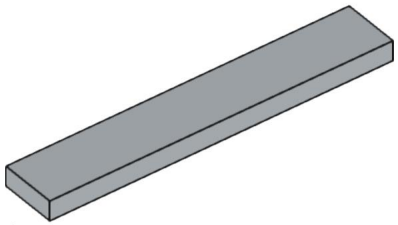

1x
6636
Light Bluish Gray

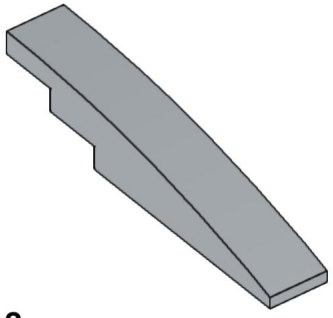

2x
6801
Light Bluish Gray

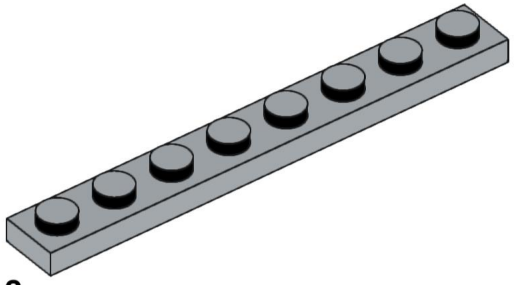

2x
3460
Light Bluish Gray

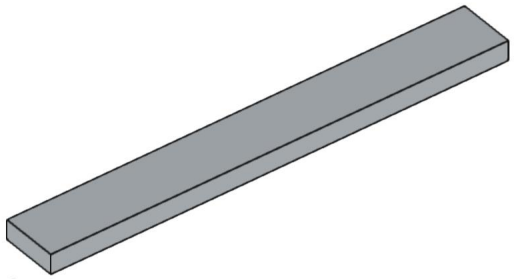

2x
4162
Light Bluish Gray

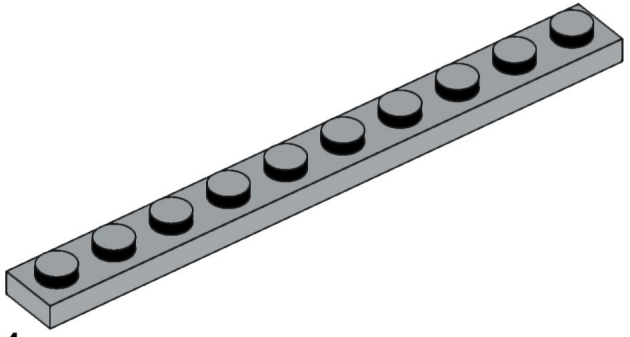

4x
4477
Light Bluish Gray



2x
89678
Red

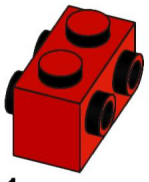

1x
52107
Red

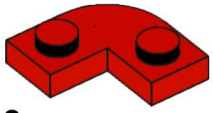

2x
79491
Red

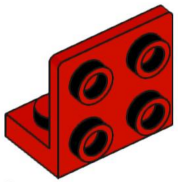

2x
99207
Red

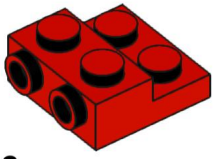

2x
99206
Red



1x
35480
Dark Tan

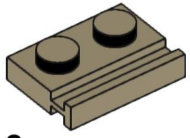

2x
32028
Dark Tan



2x
24246
Tan

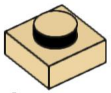

4x
3024
Tan



2x
54200
Tan

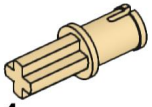

4x
3749
Tan

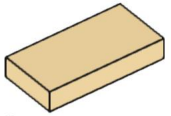

3x
3069
Tan



2x
30377
Tan

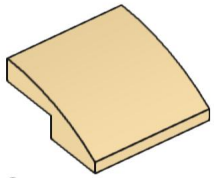

8x
15068
Tan

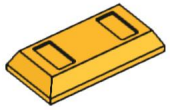

1x
99563
Bright Light Orange

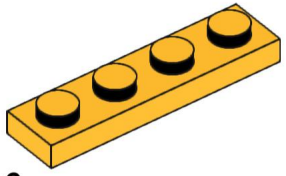

6x
3710
Bright Light Orange

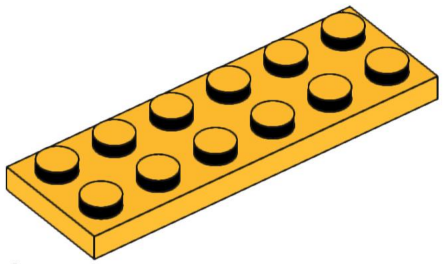

1x
3795
Bright Light Orange

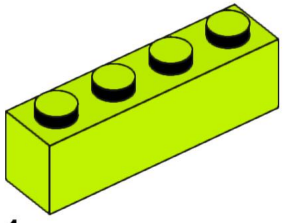

1x
3010
Lime



2x
3386
Light Aqua

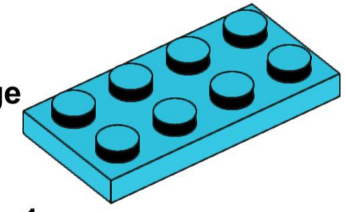

1x
3020
Medium Azure

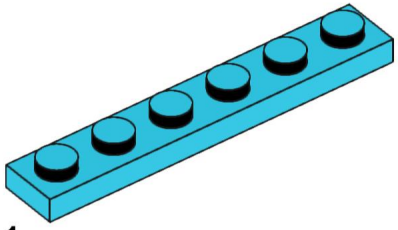

1x
3666
Medium Azure

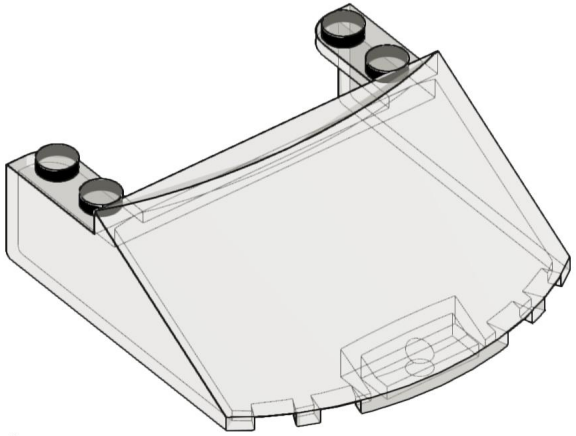

1x
65632
Trans-Brown



4x
72210b
Pearl Dark Gray



4x
72206pb01
Pearl Dark Gray