1



# 2

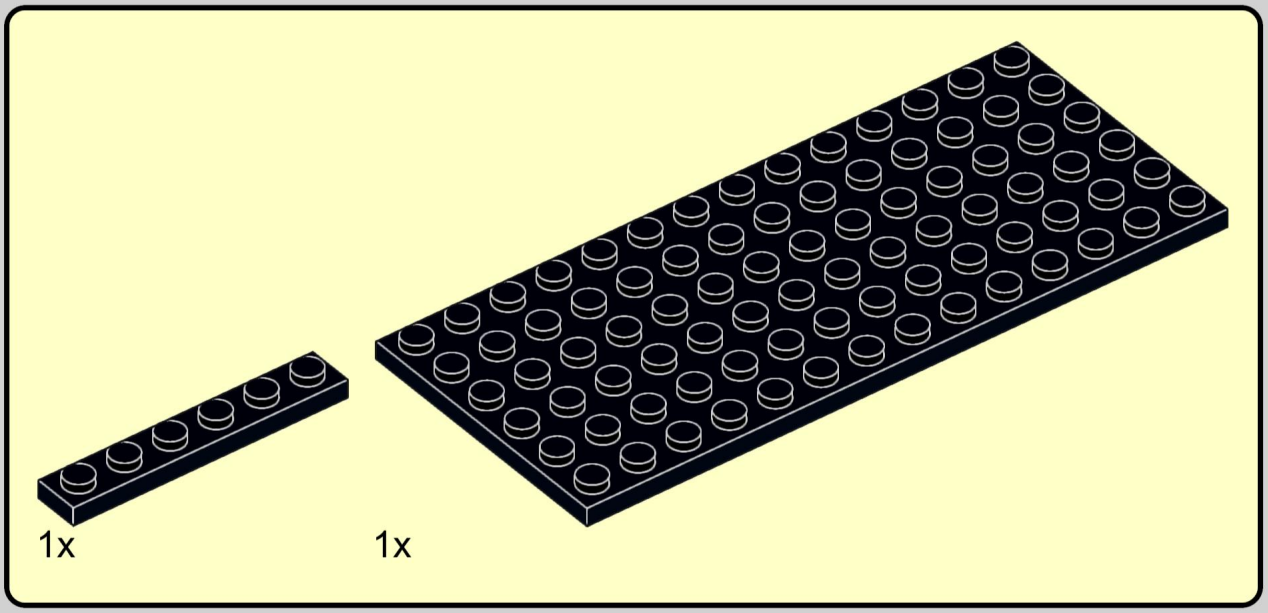


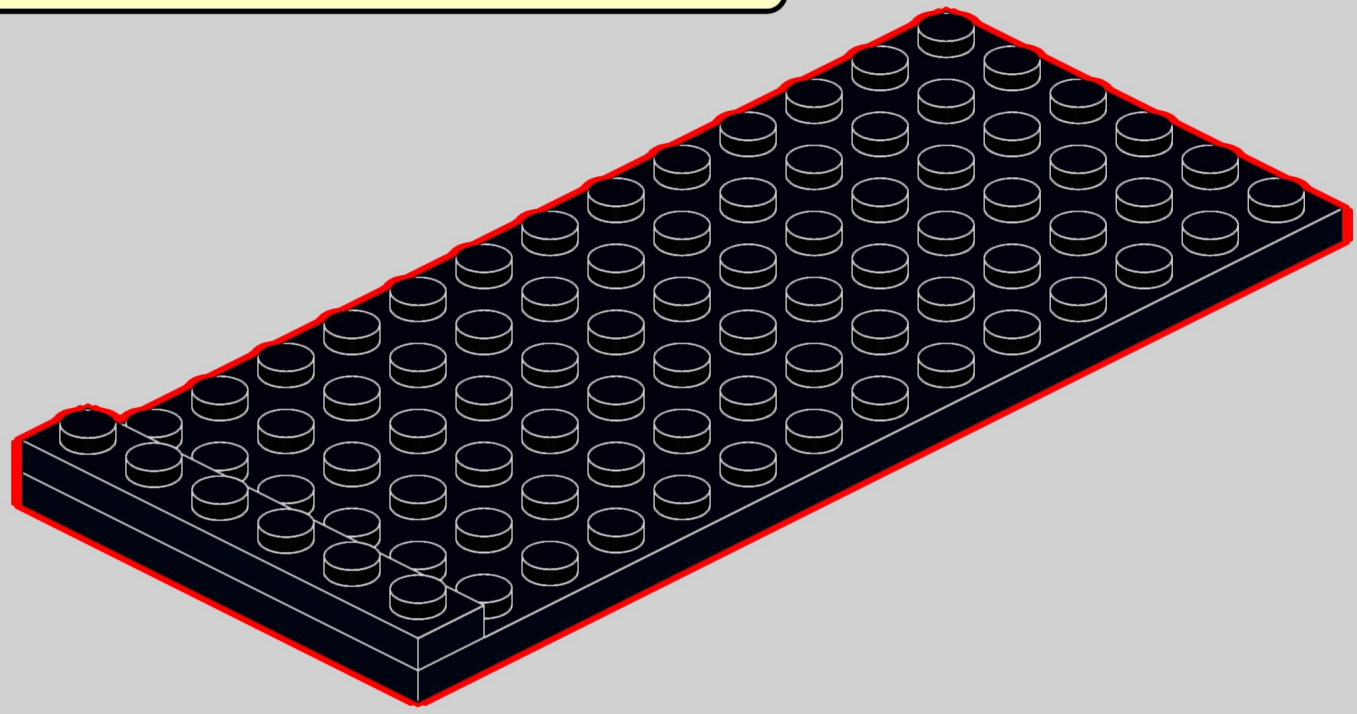

# 3

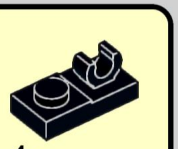


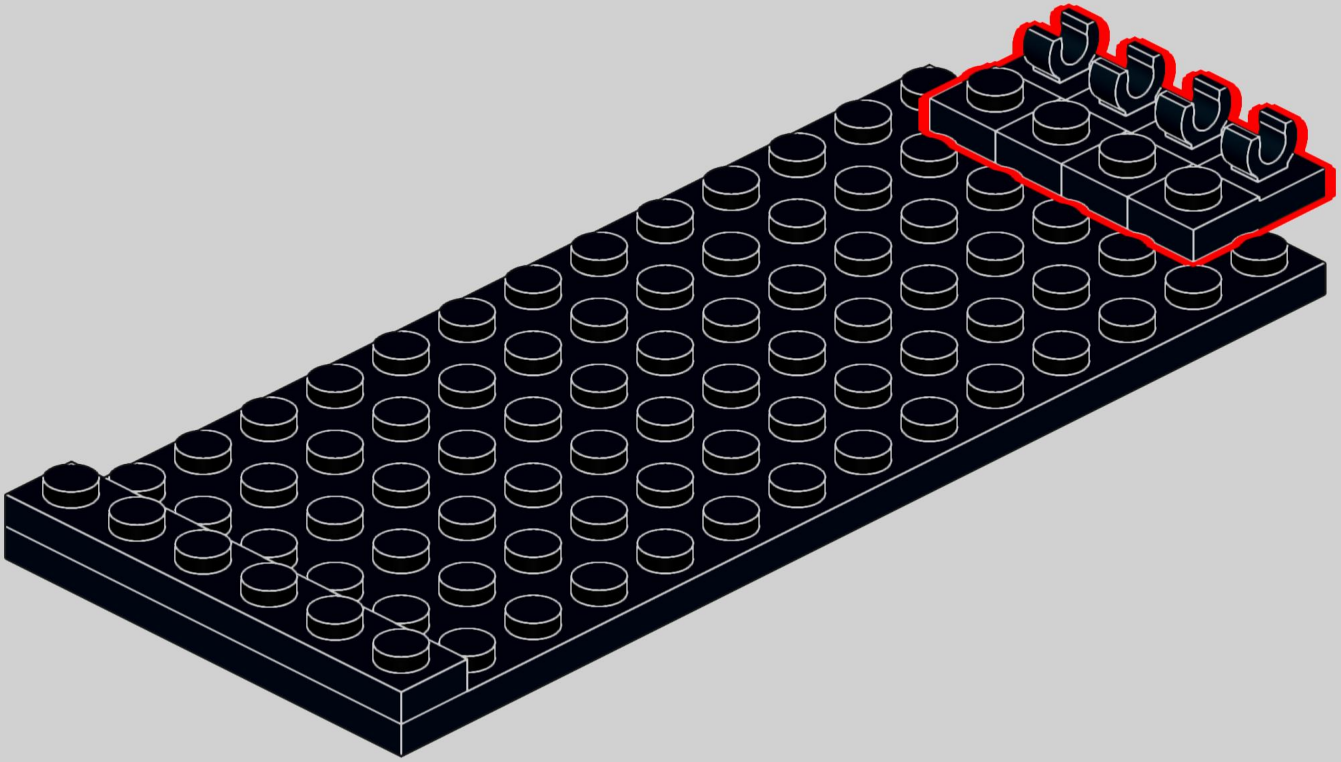

# 4

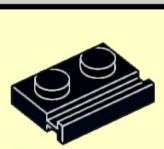


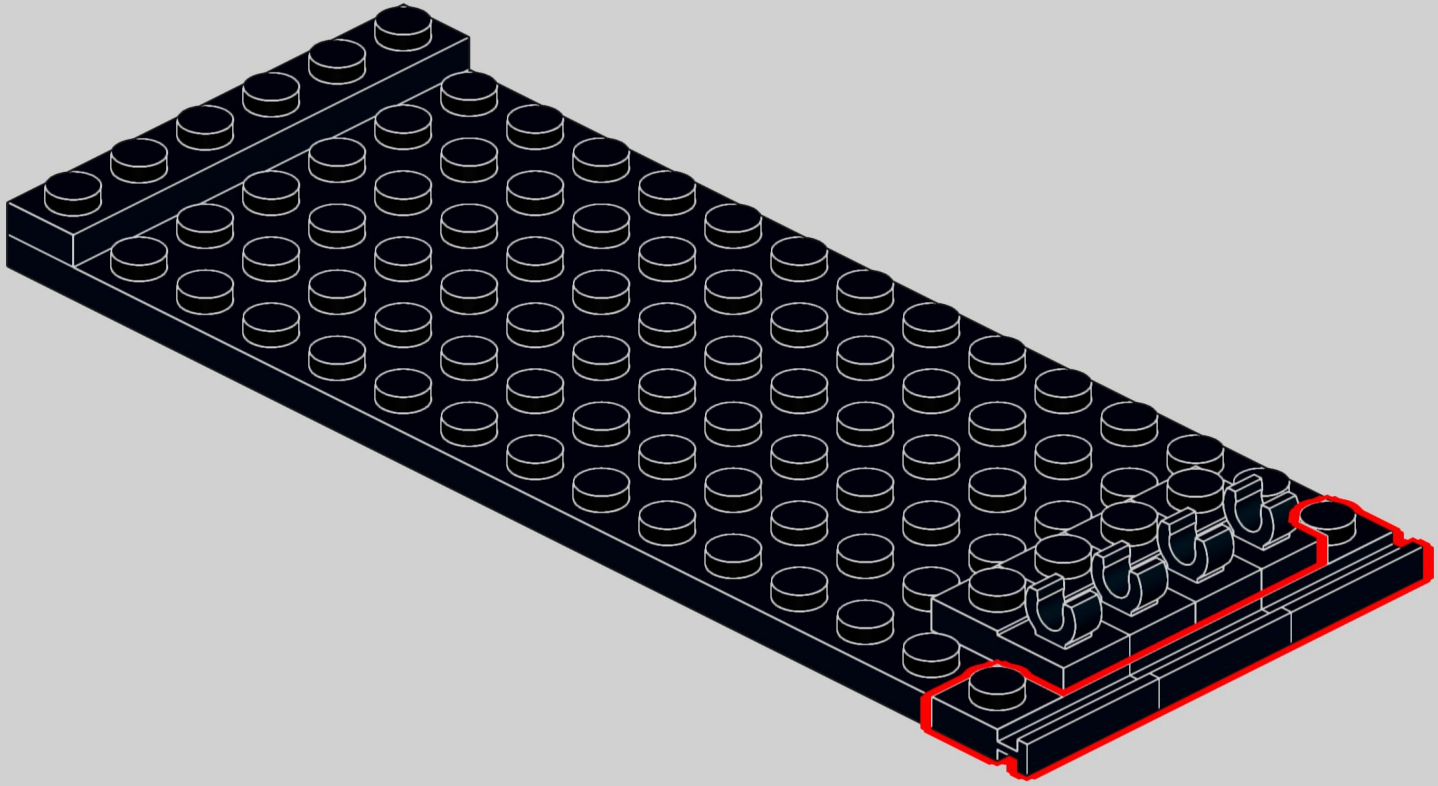

# 5

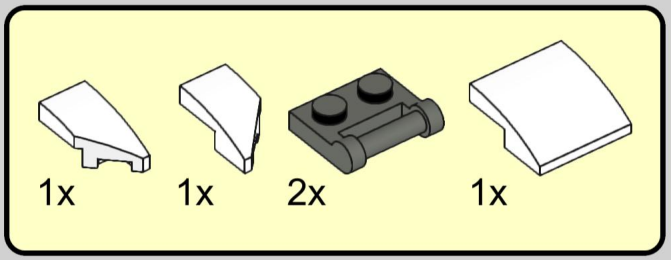


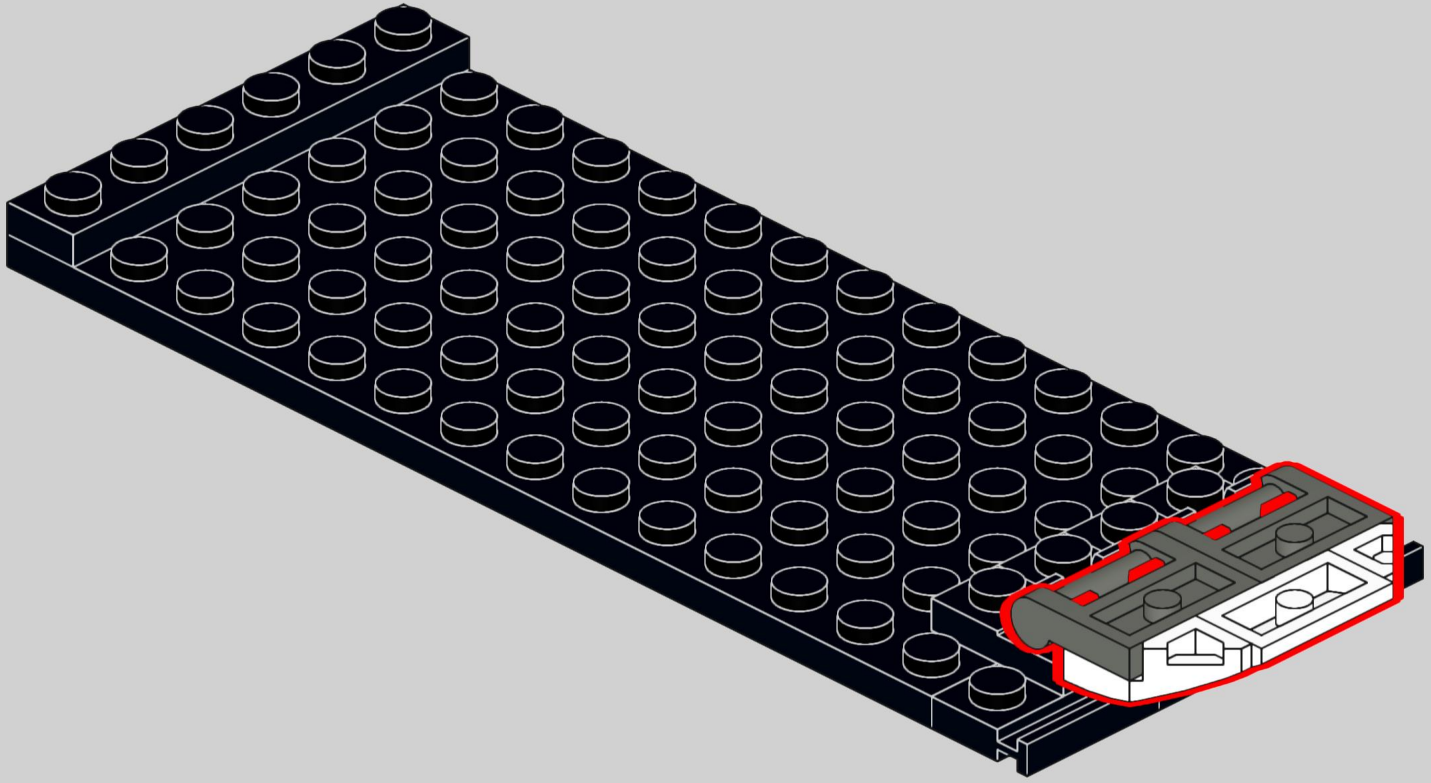

# 6

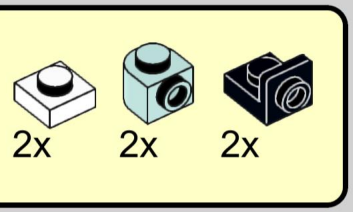


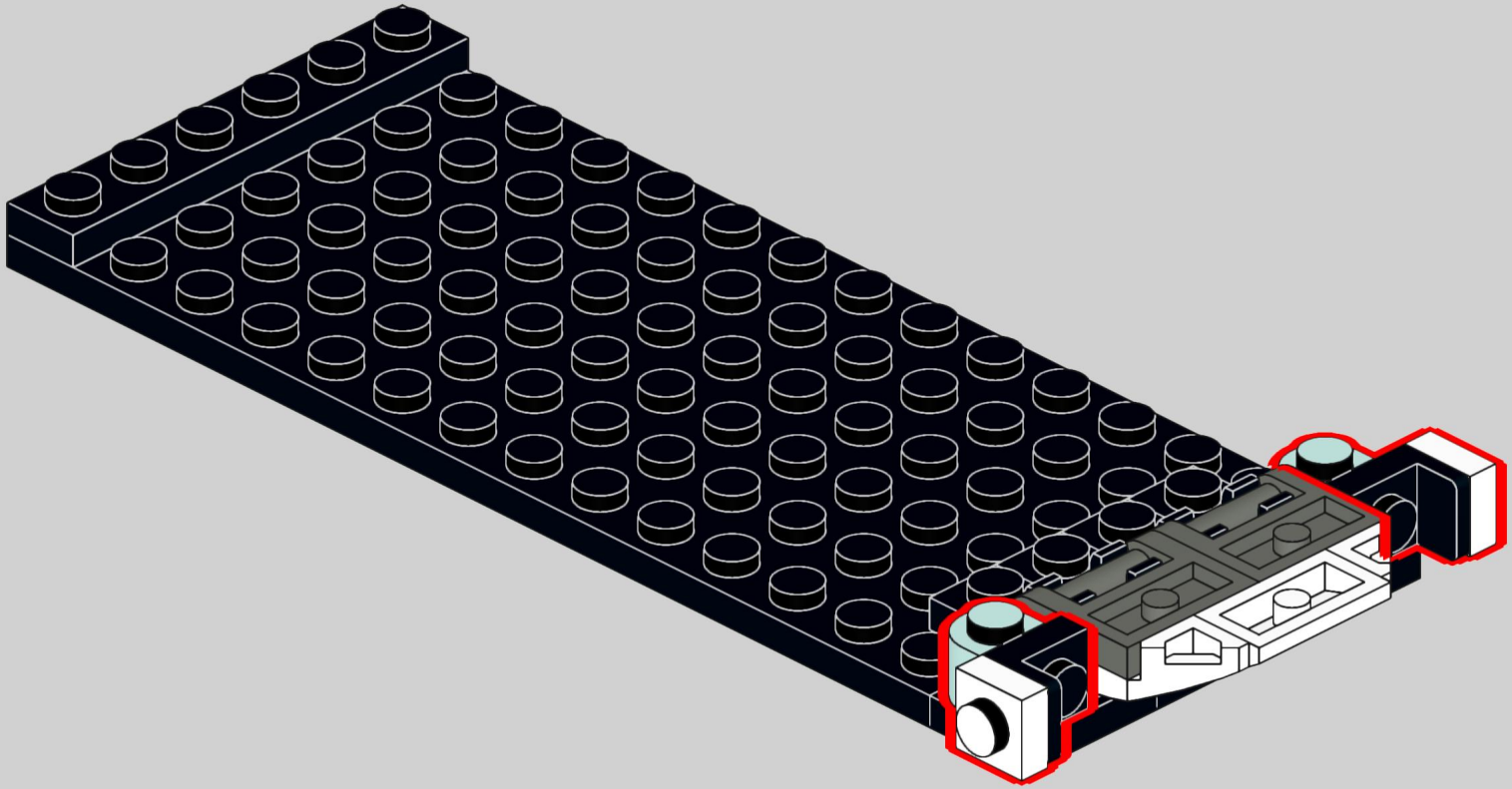

# 7

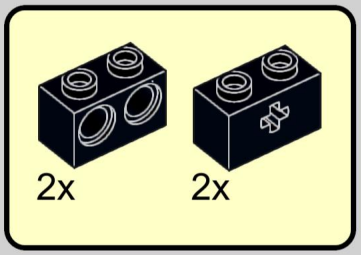


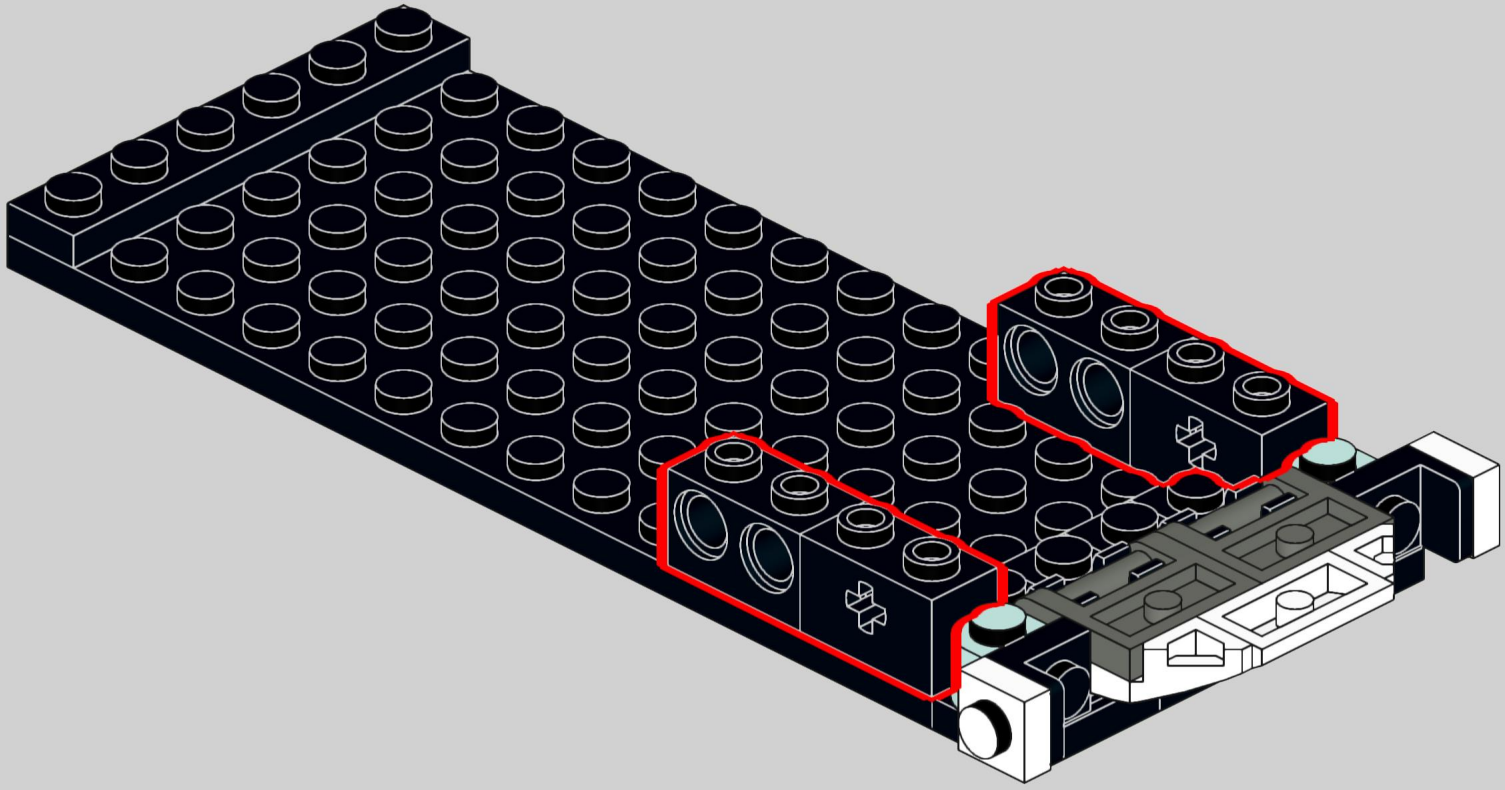

# 8

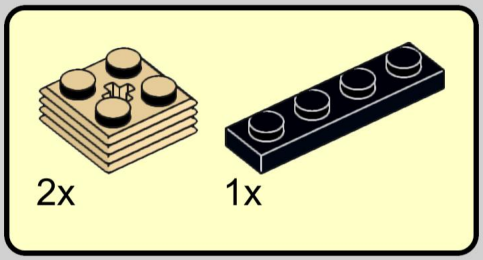


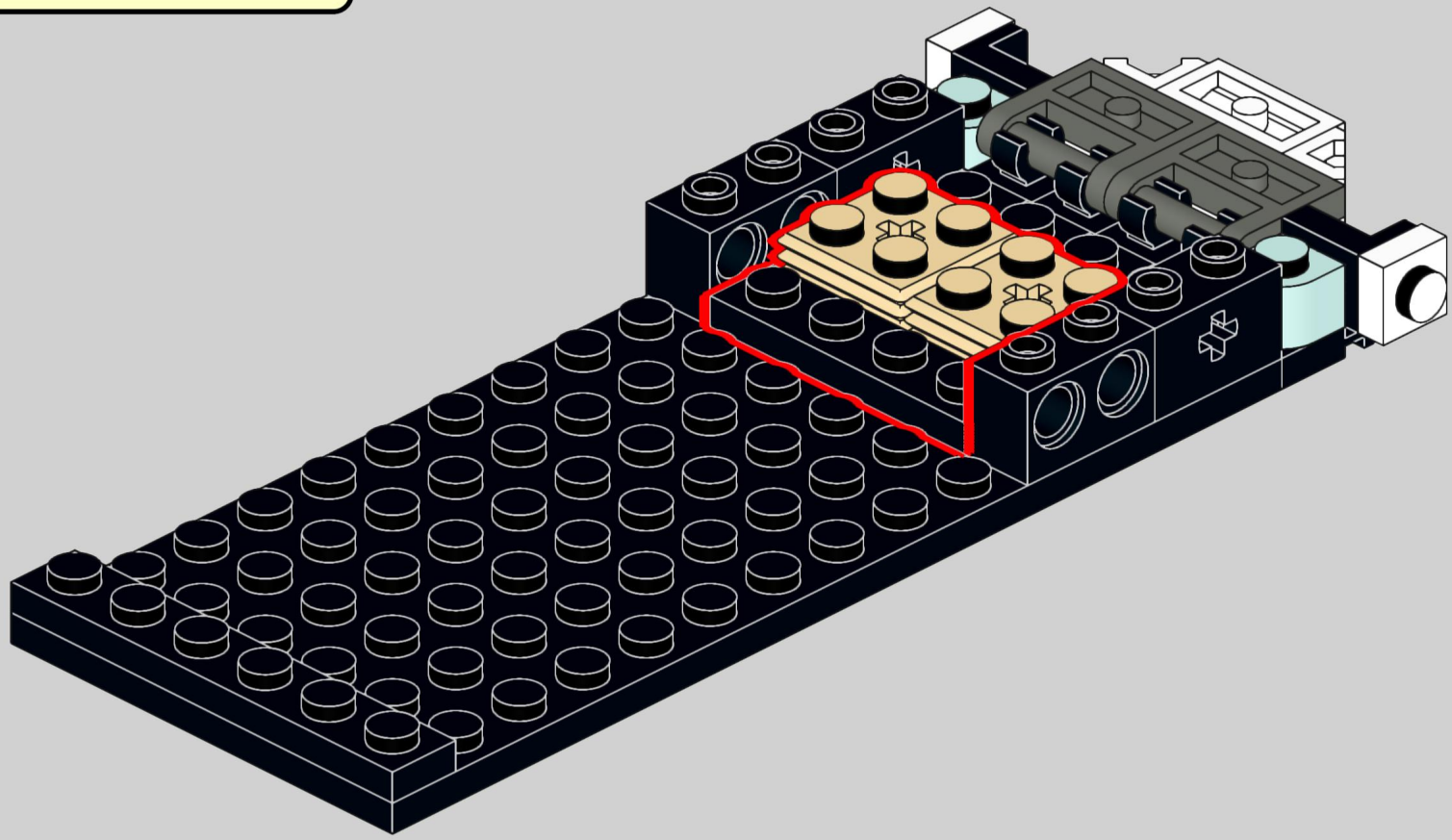

# 9




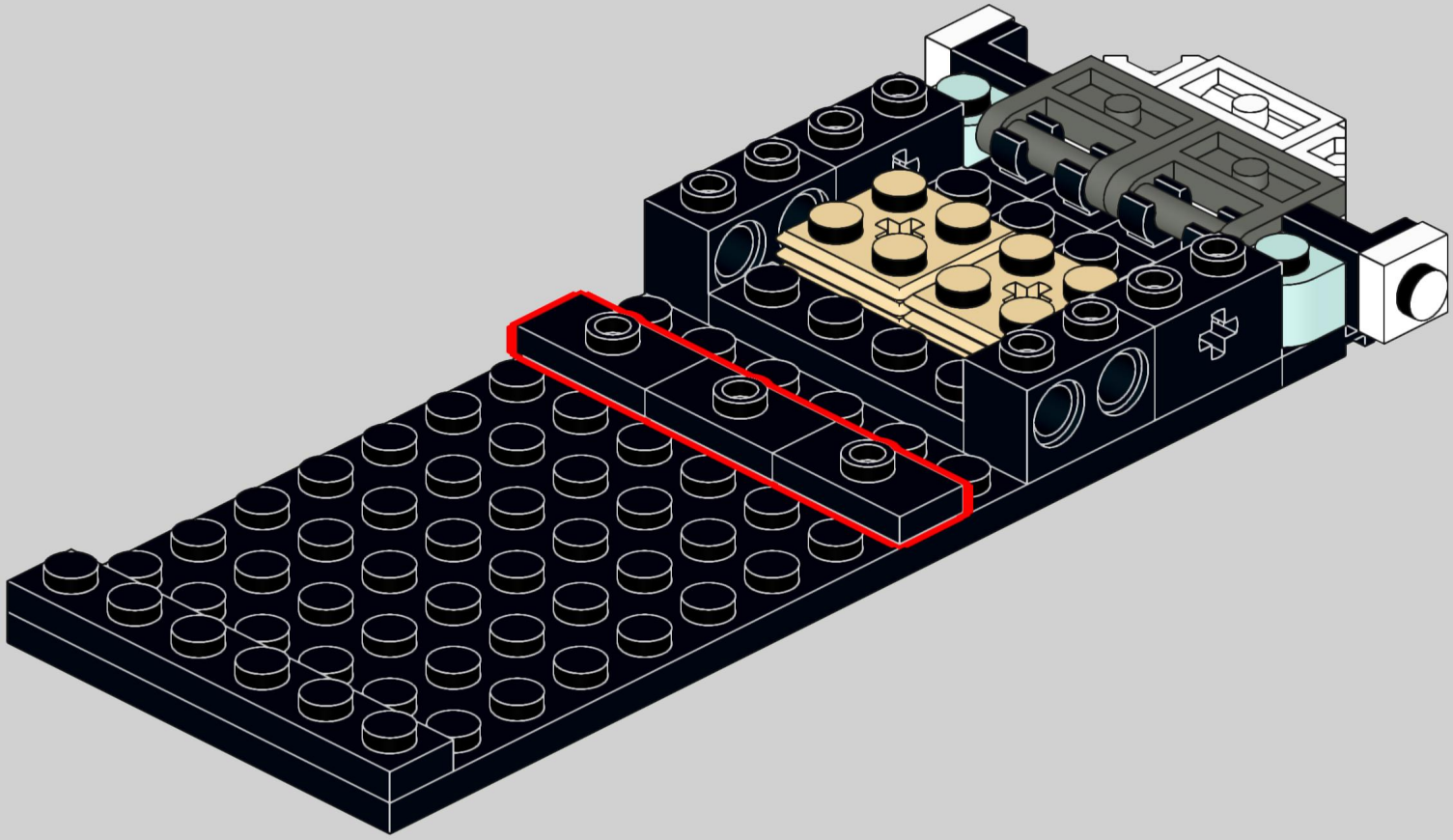

# 10

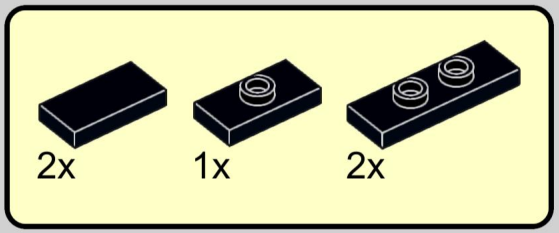


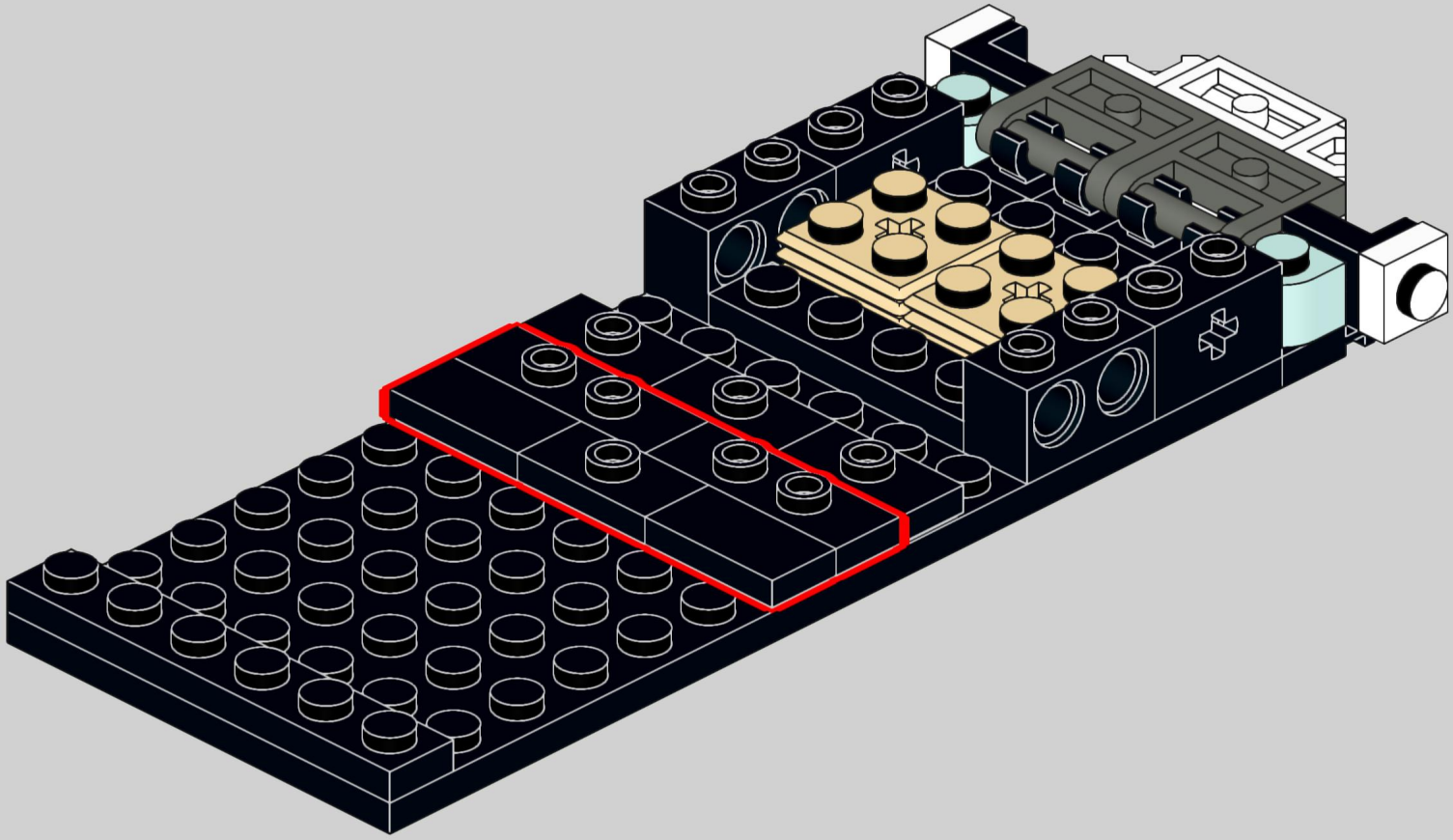

# 11

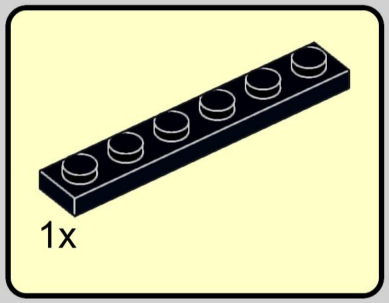


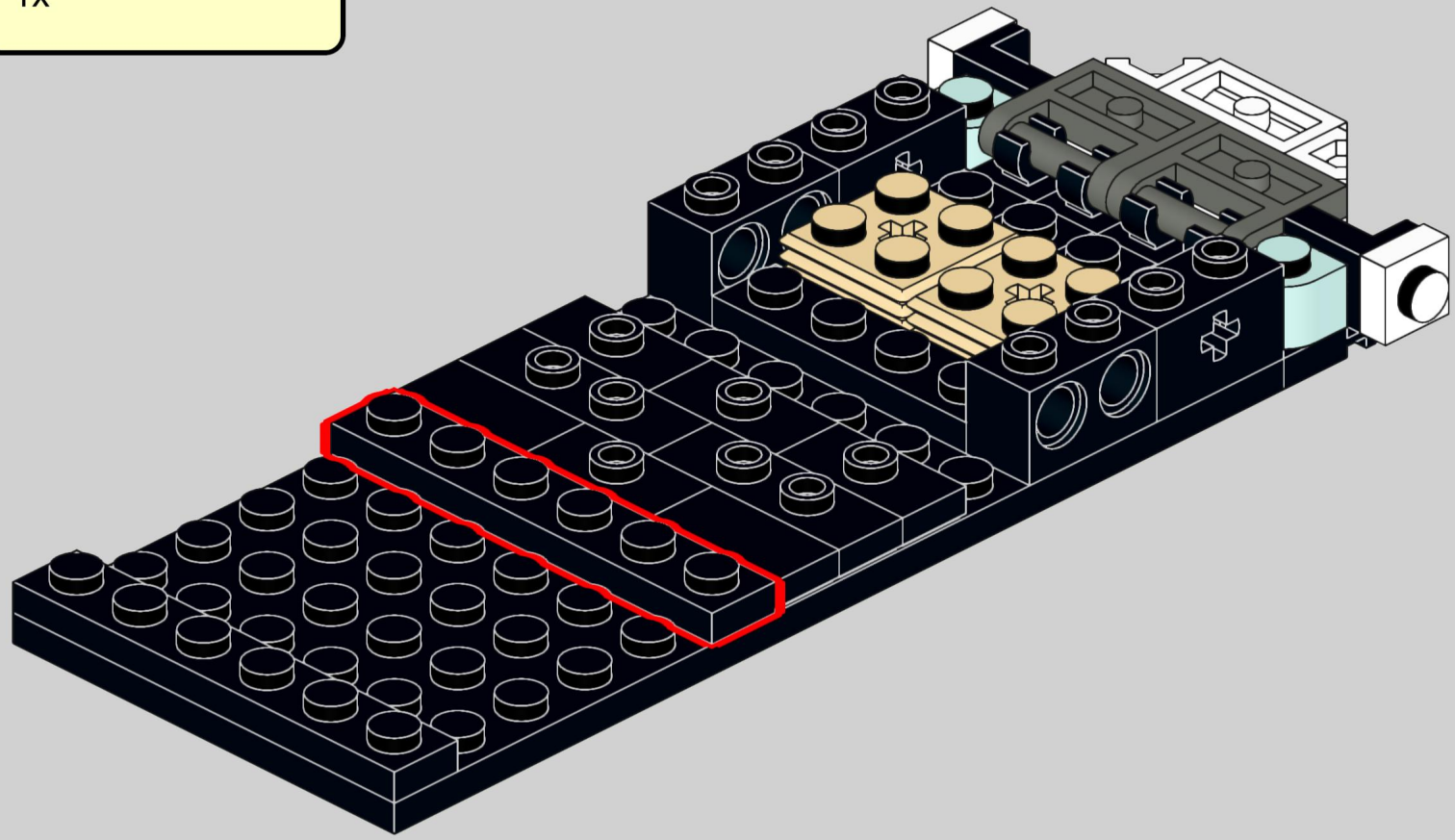

# 12

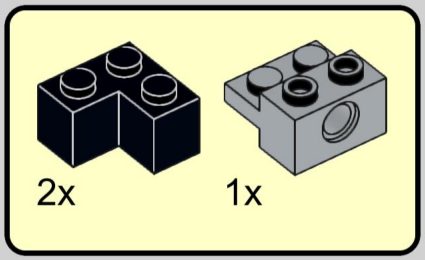


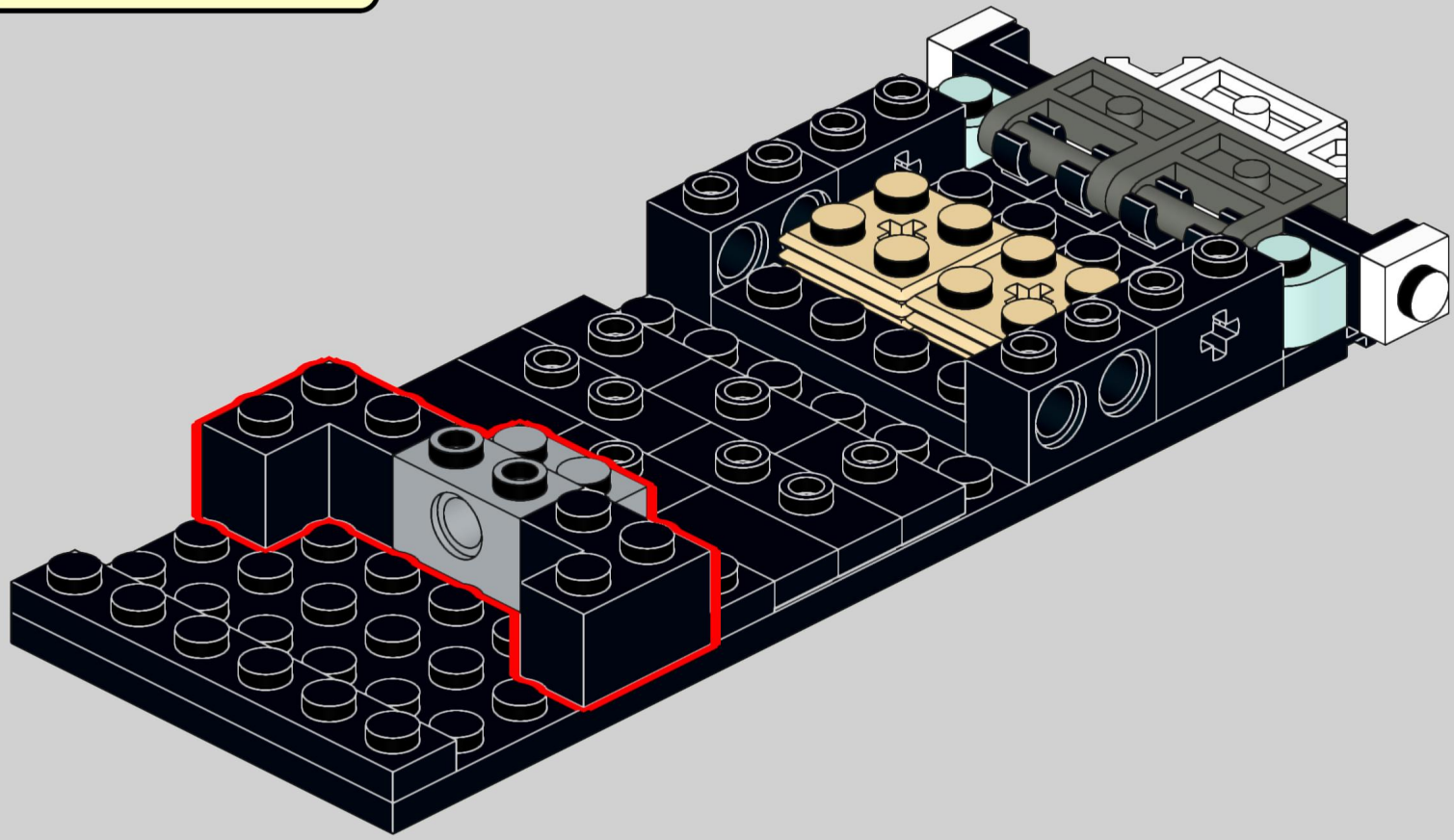

# 13

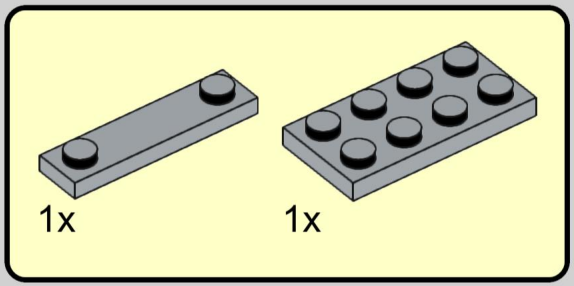


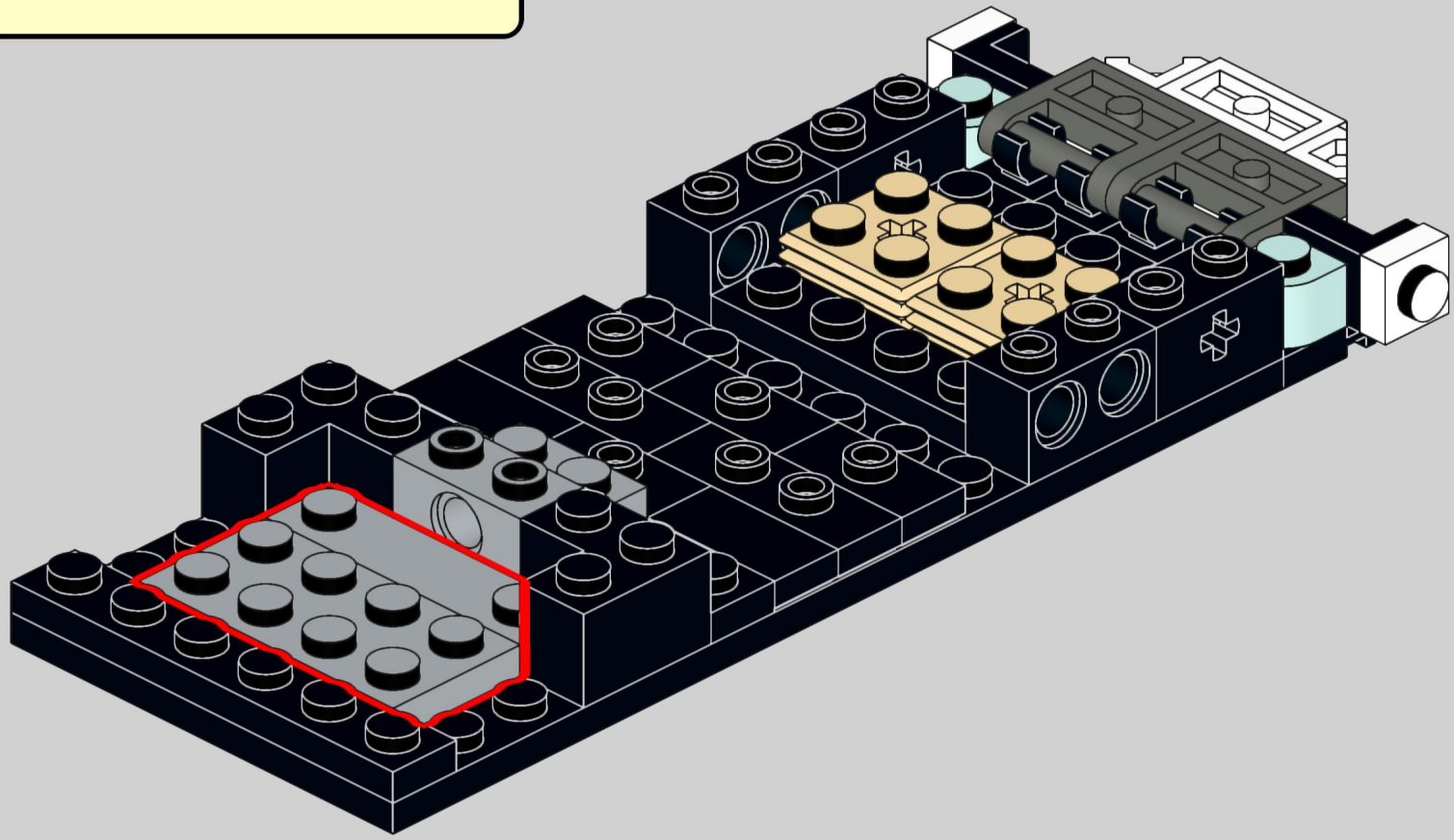

# 14

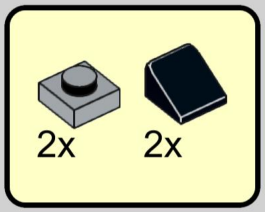


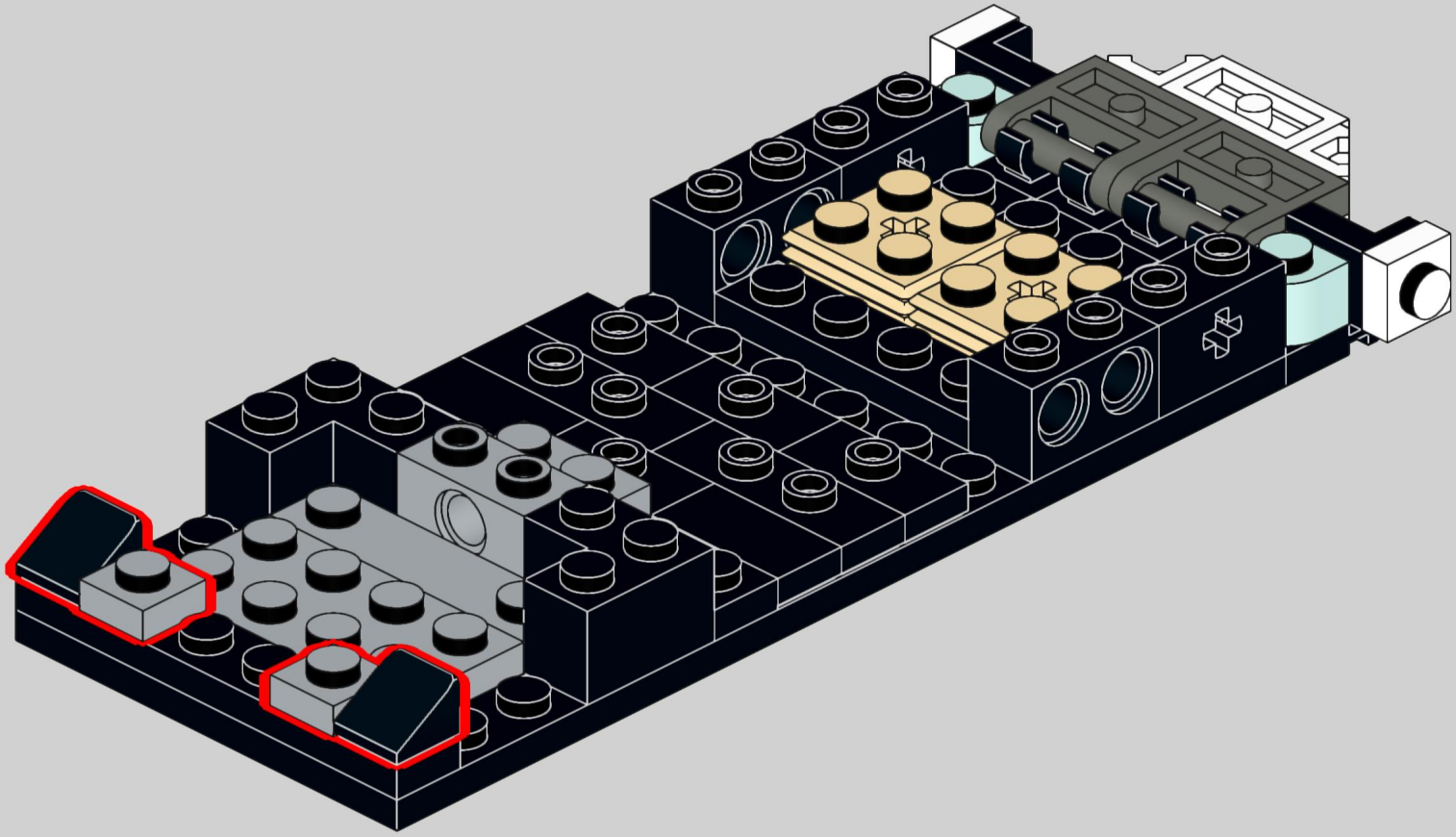

# 15

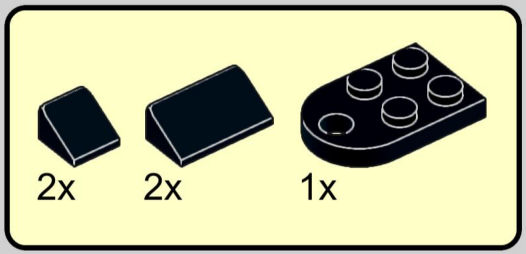


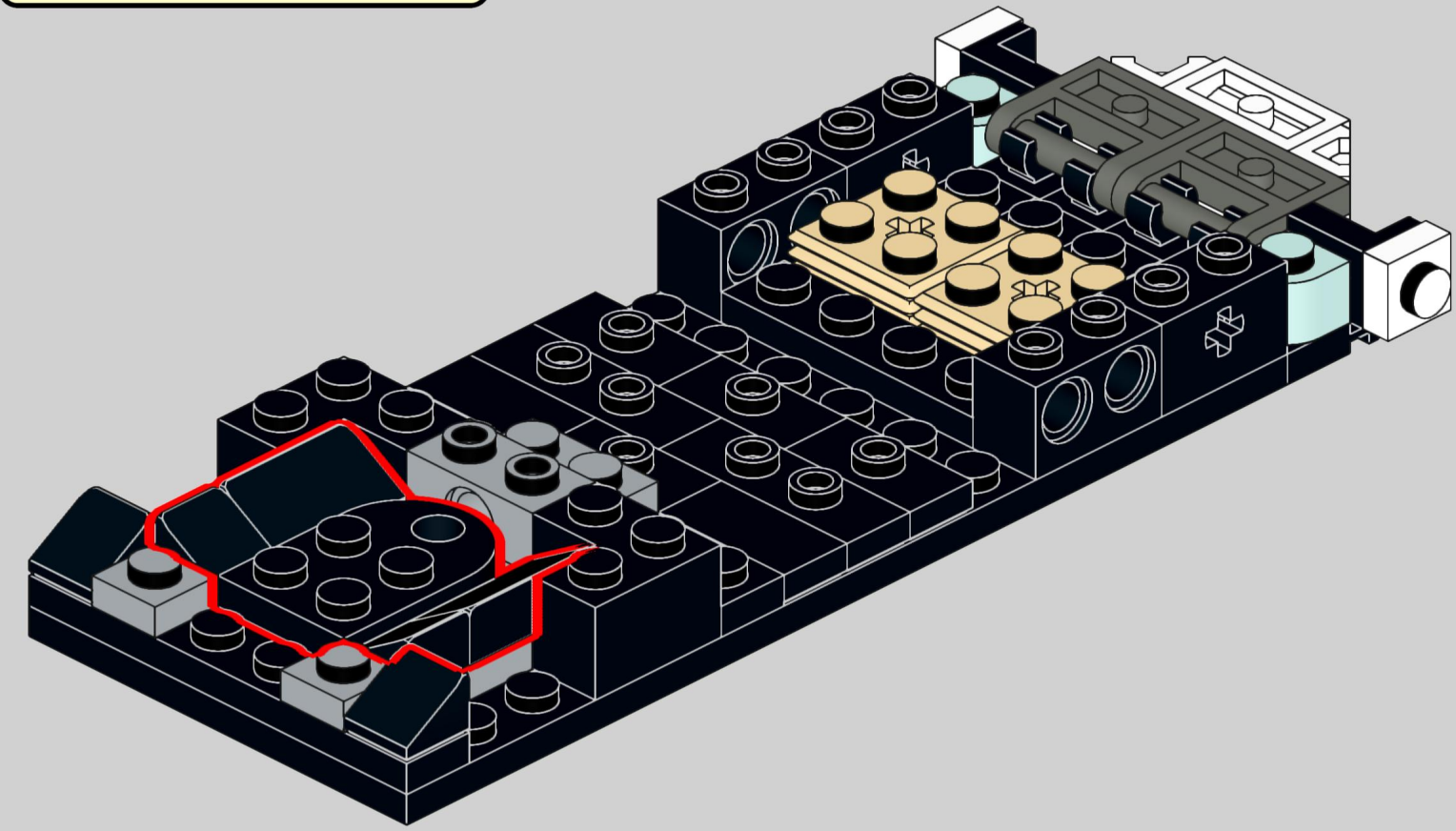

# 16

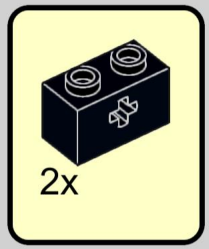


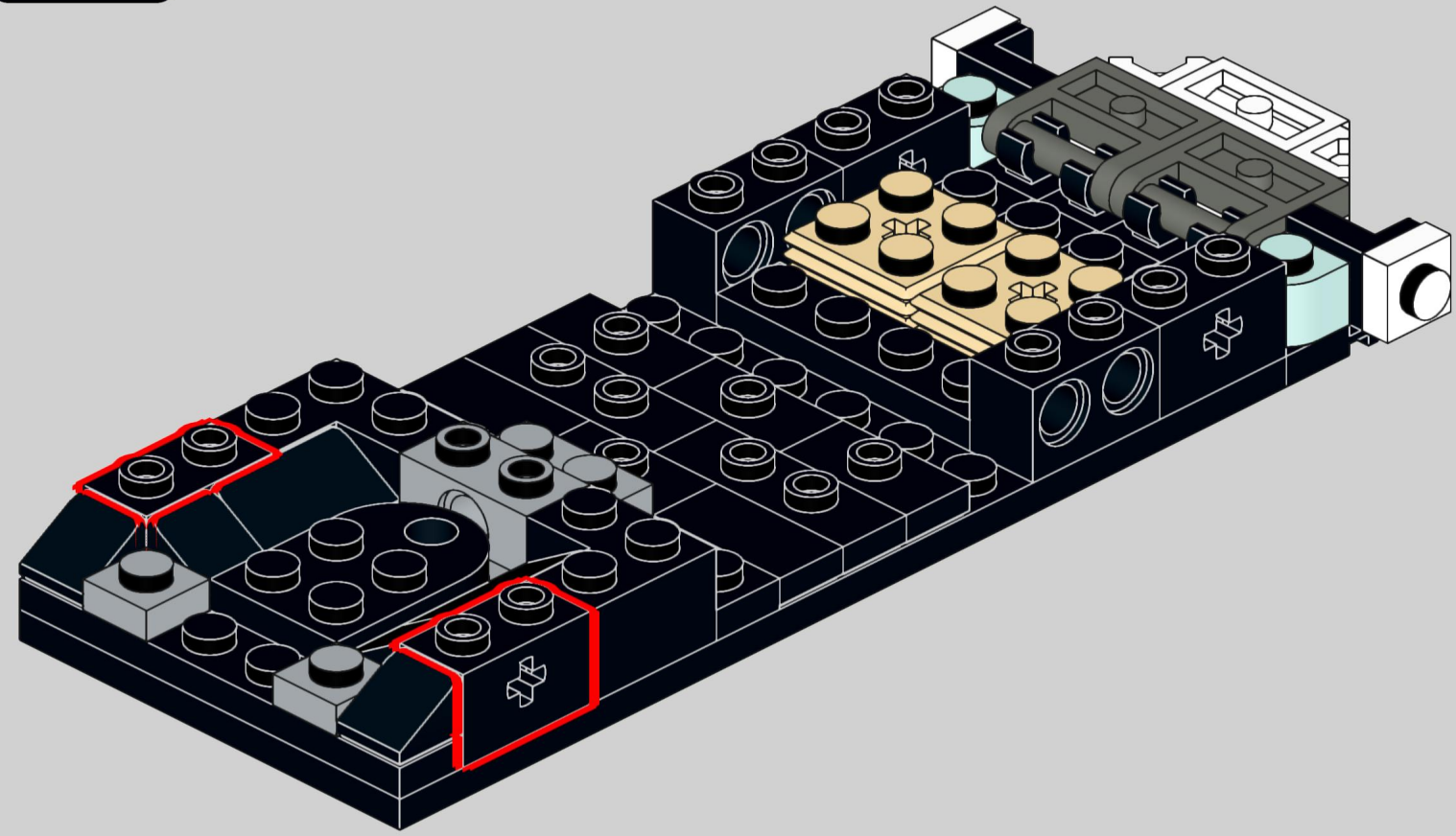

# 17

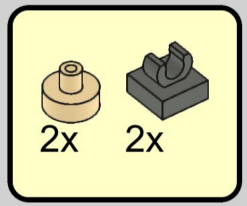


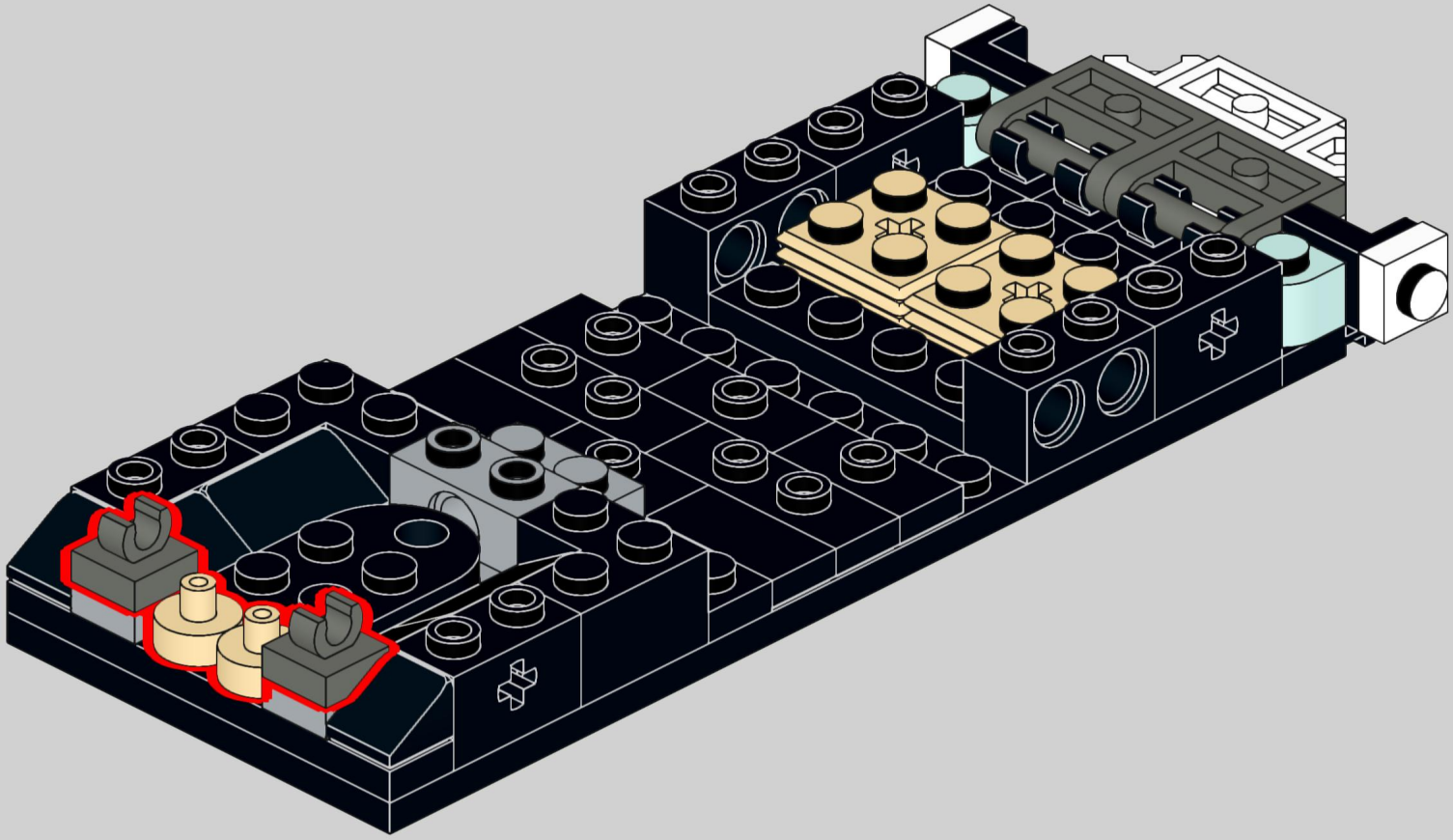

# 18

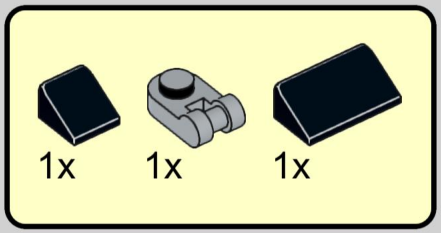


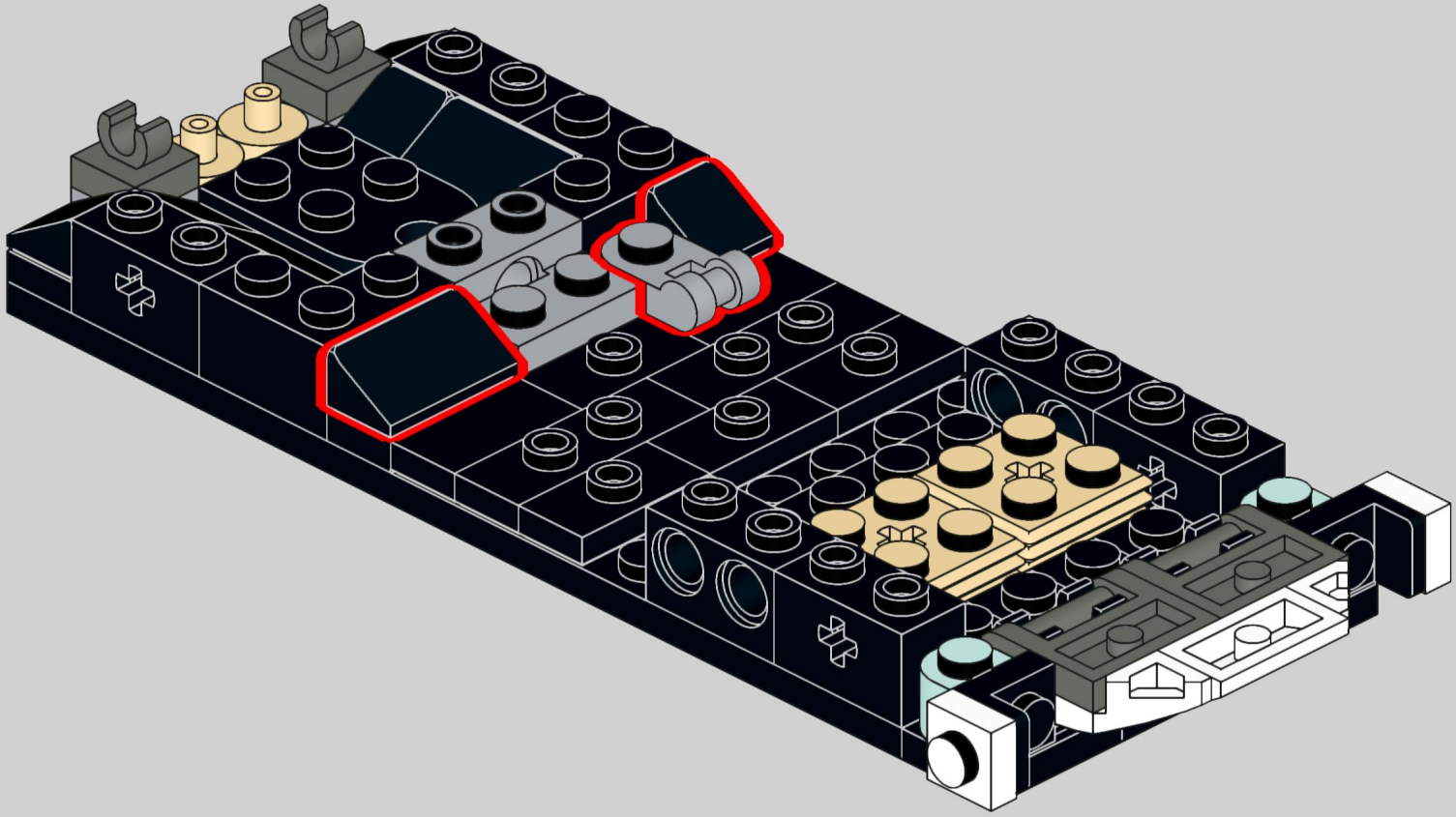

# 19

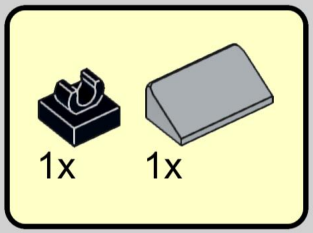


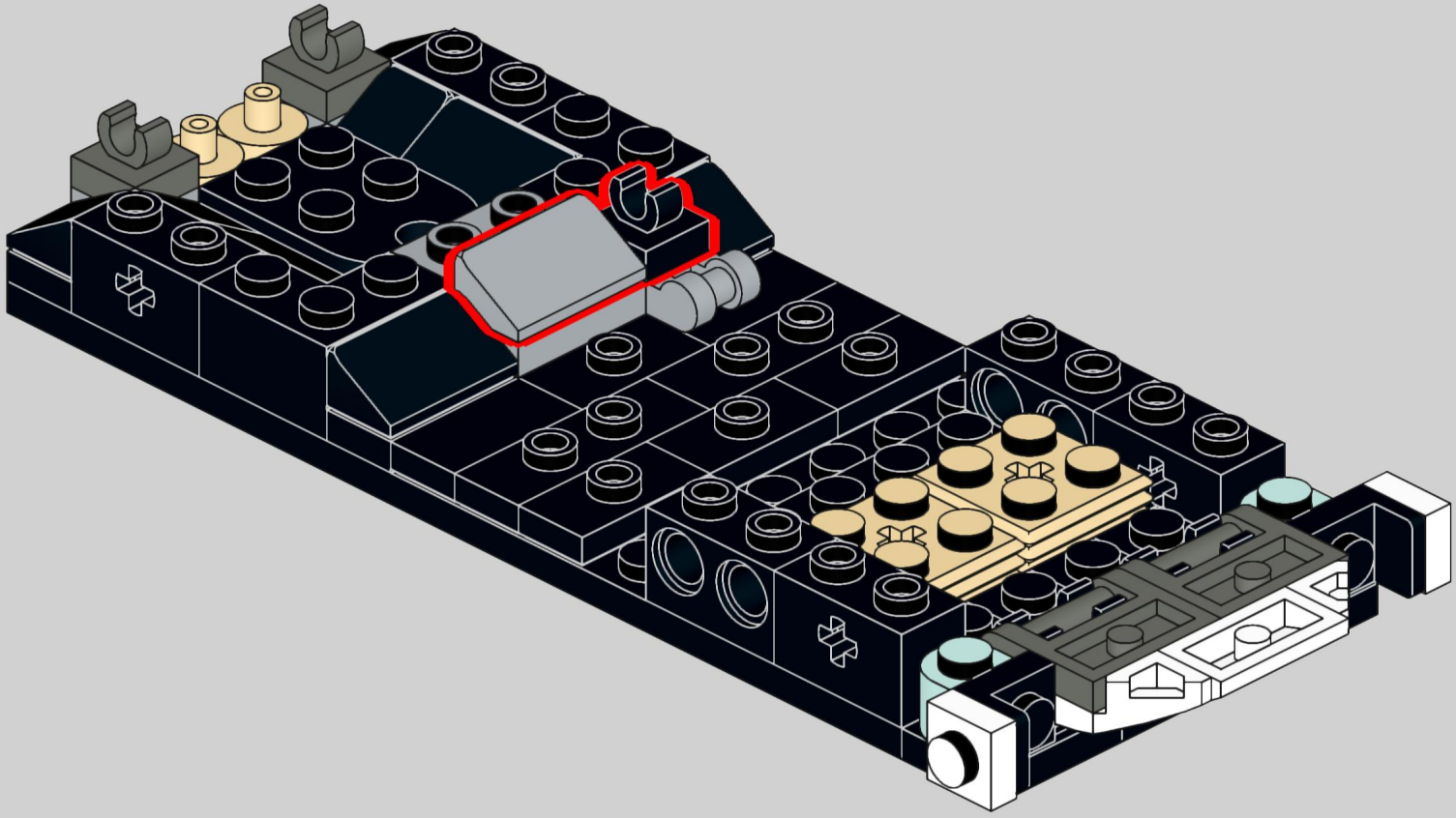

# 20

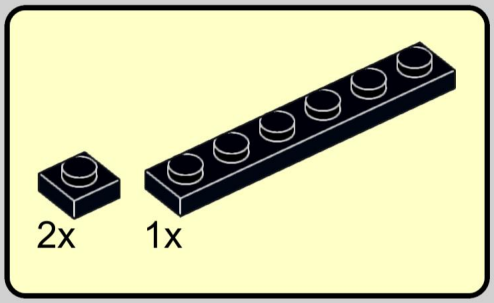


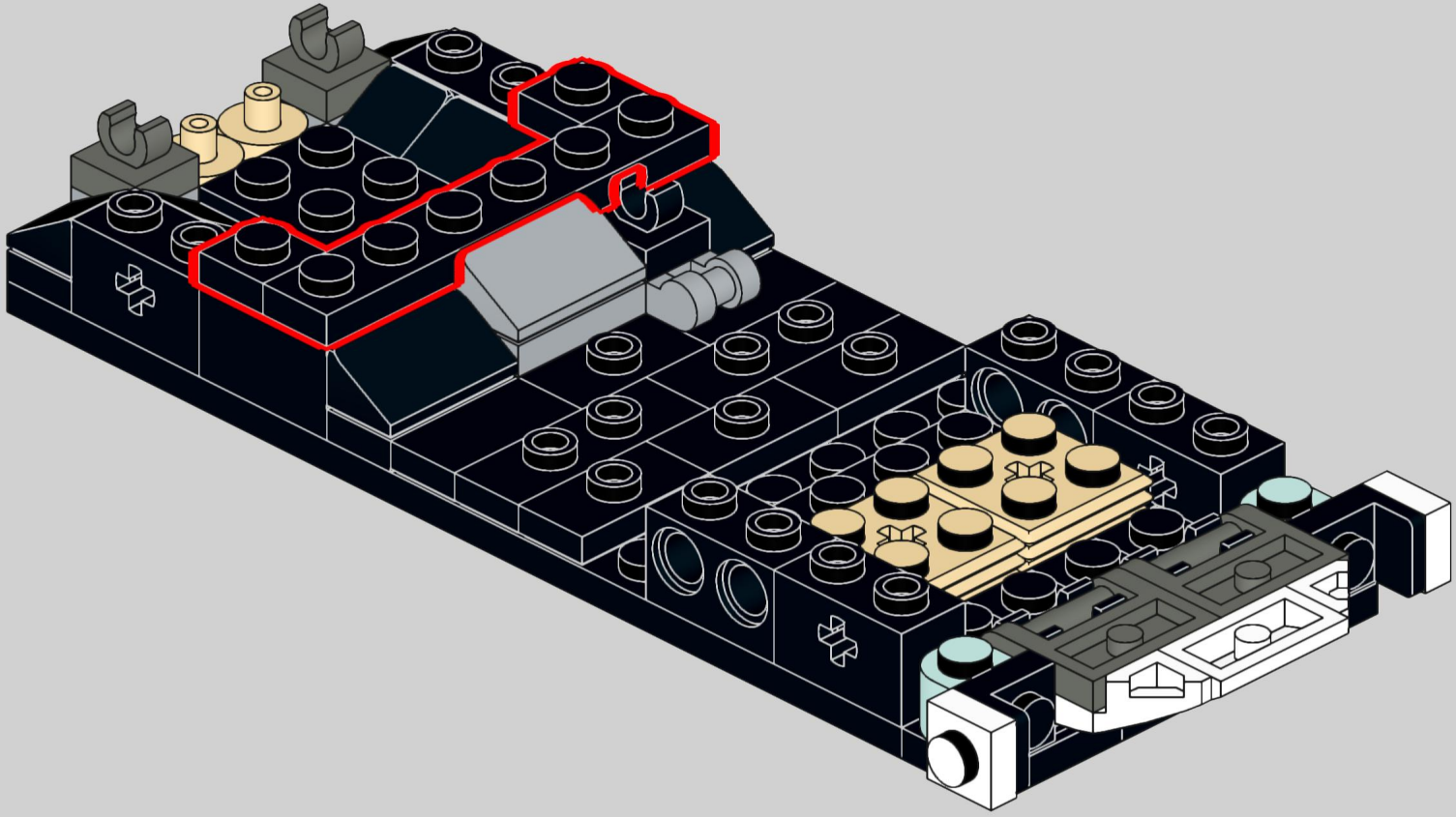

# 21

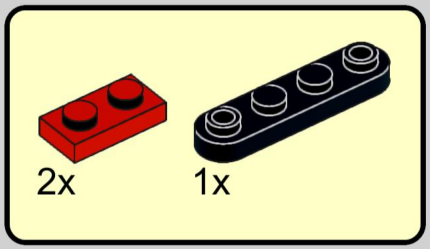


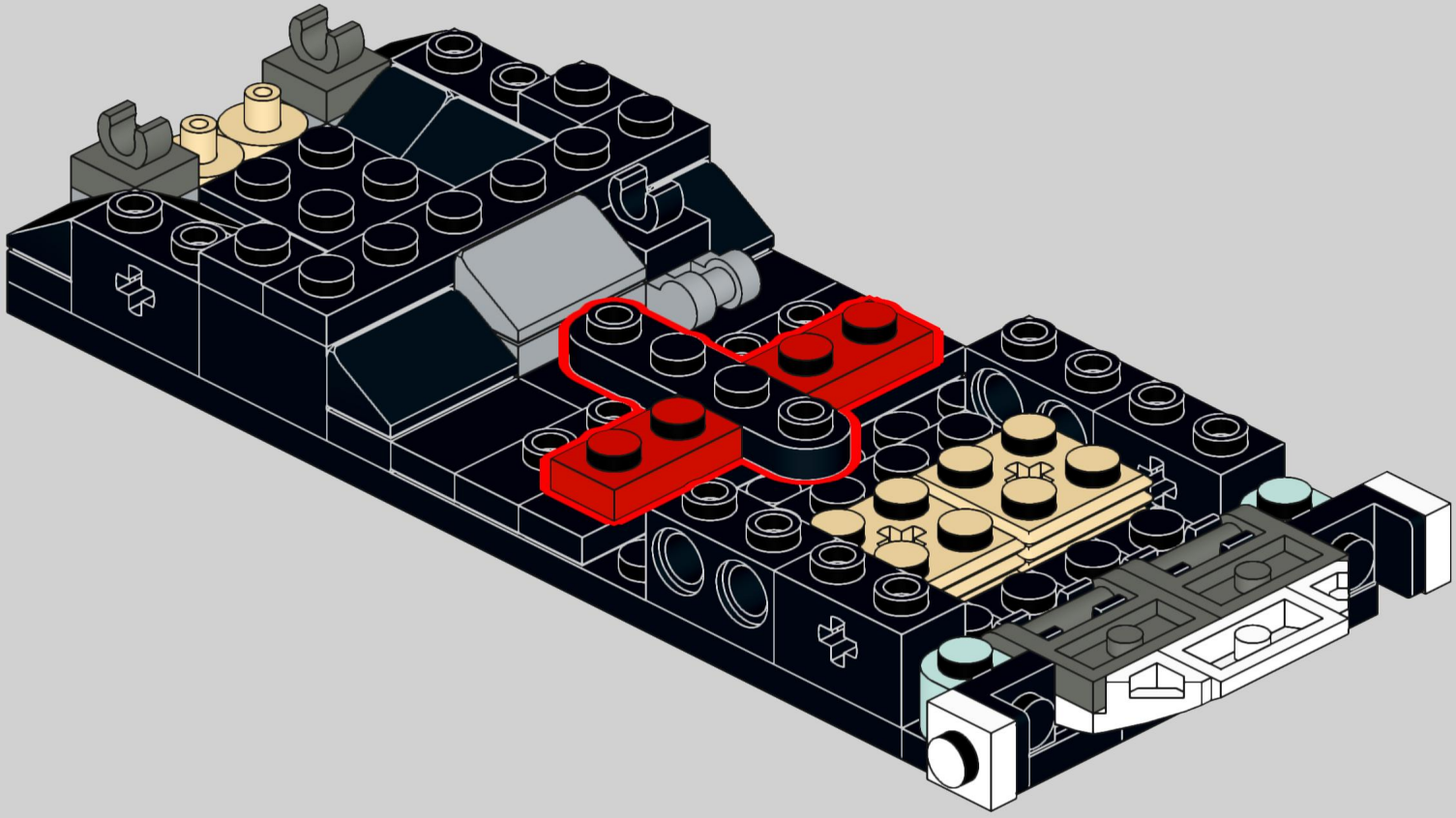

# 22

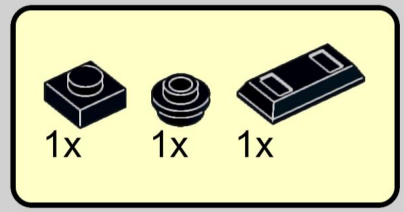


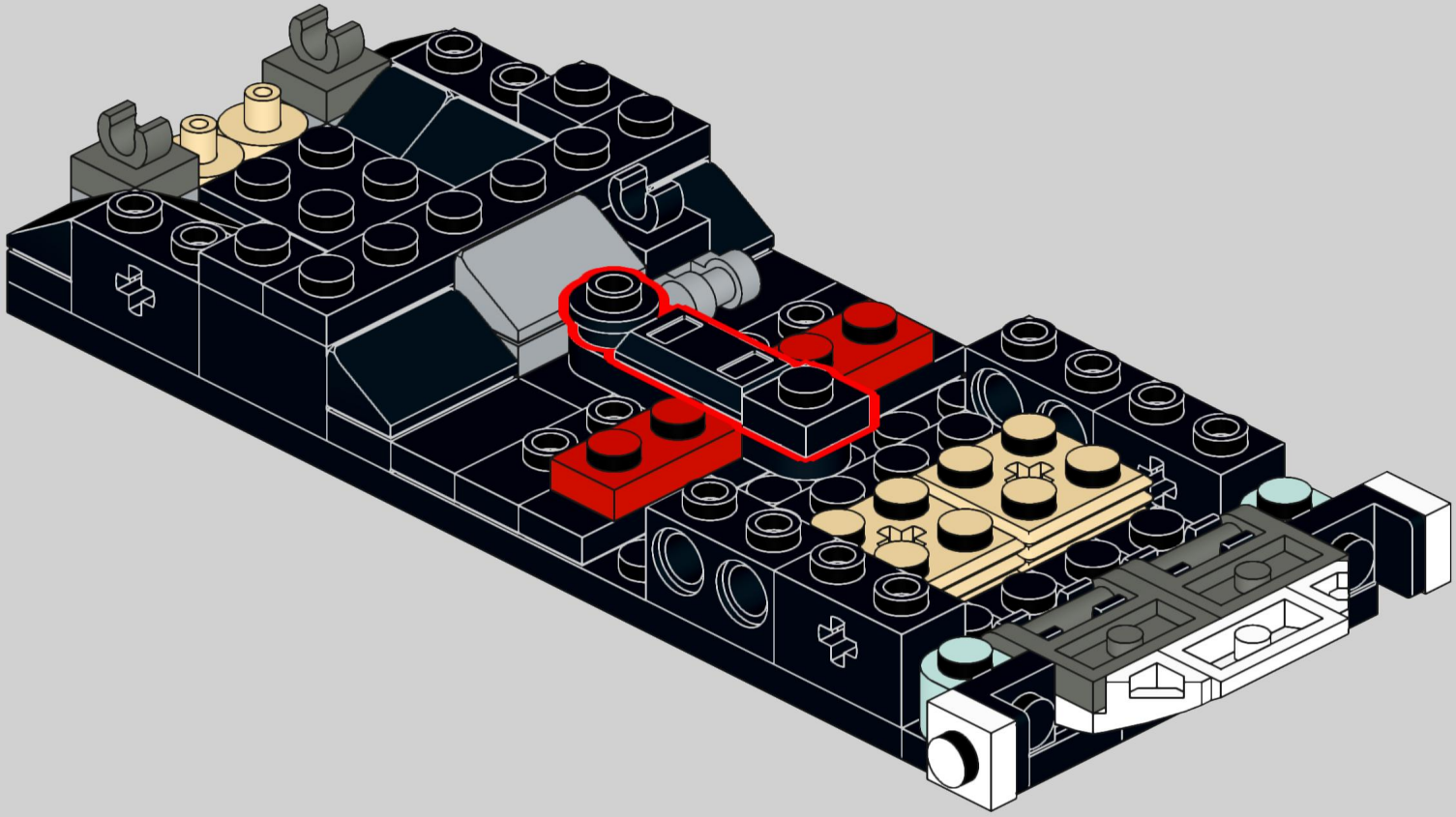

# 23

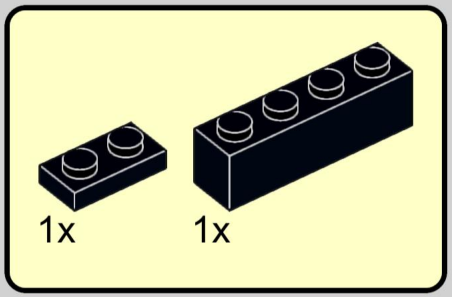


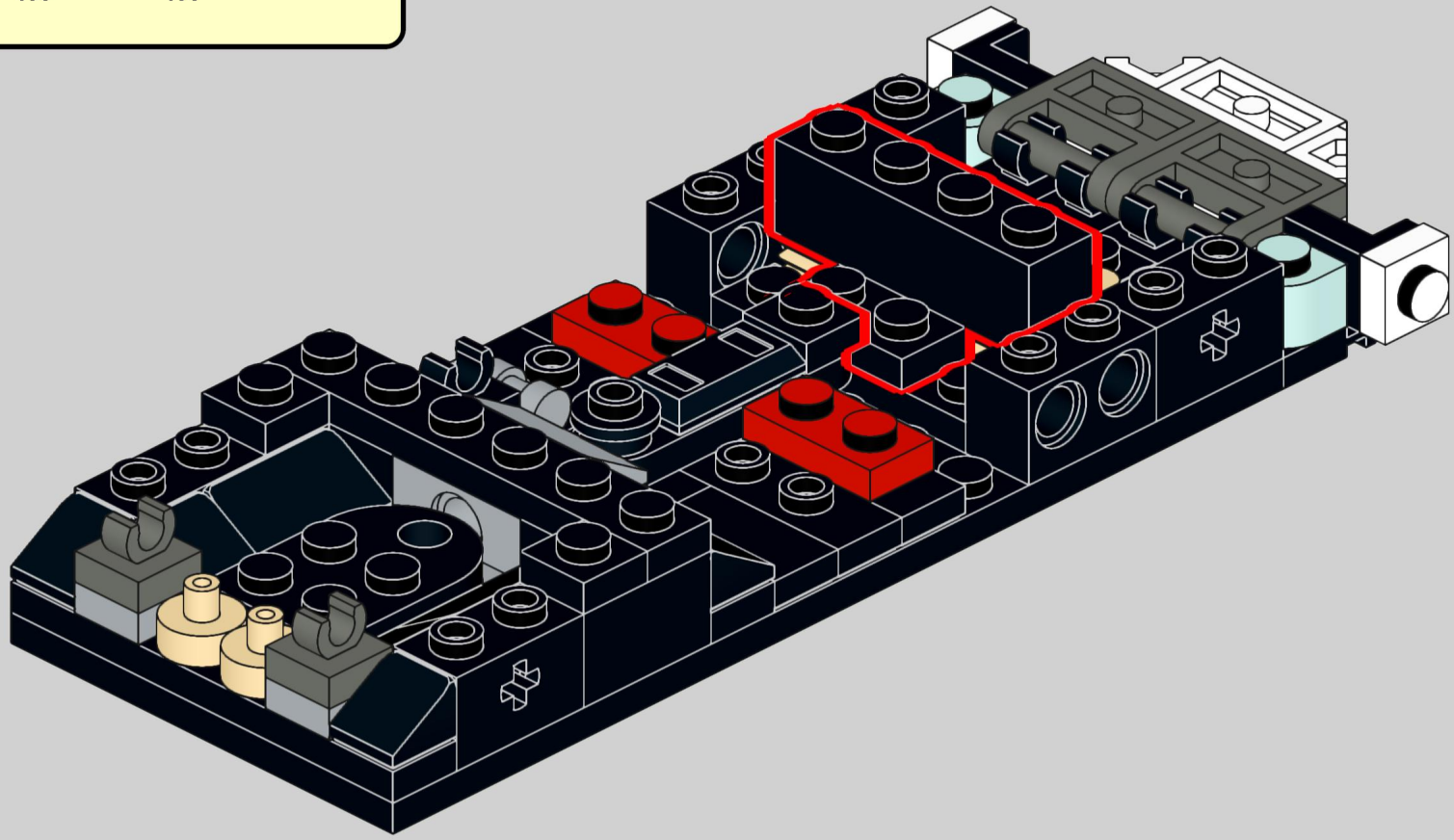

# 24

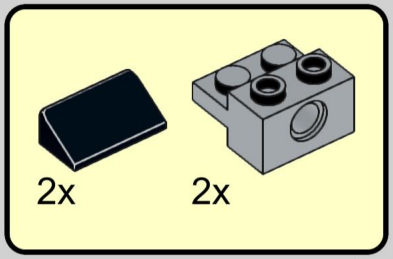


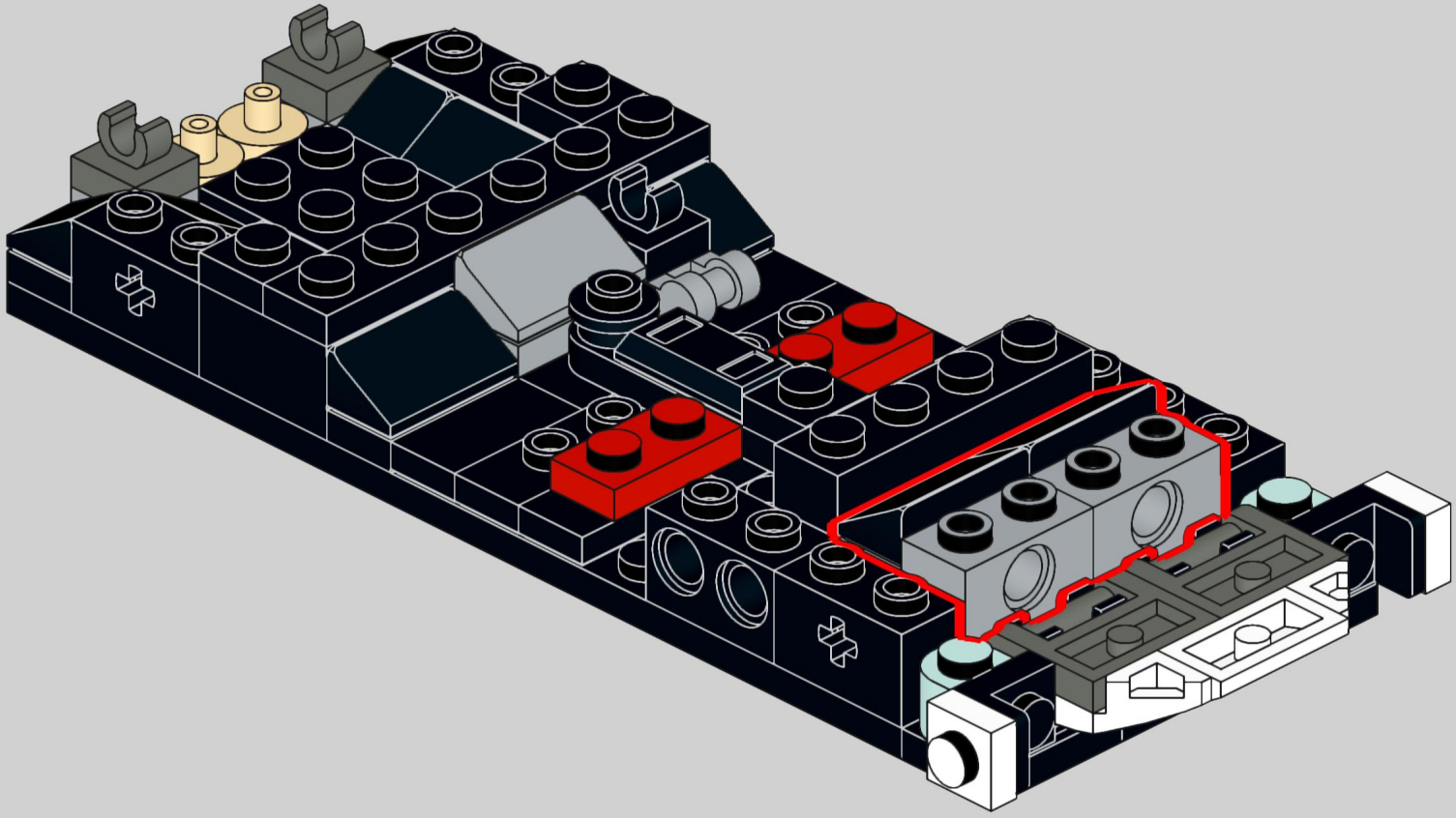

# 25

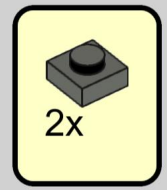


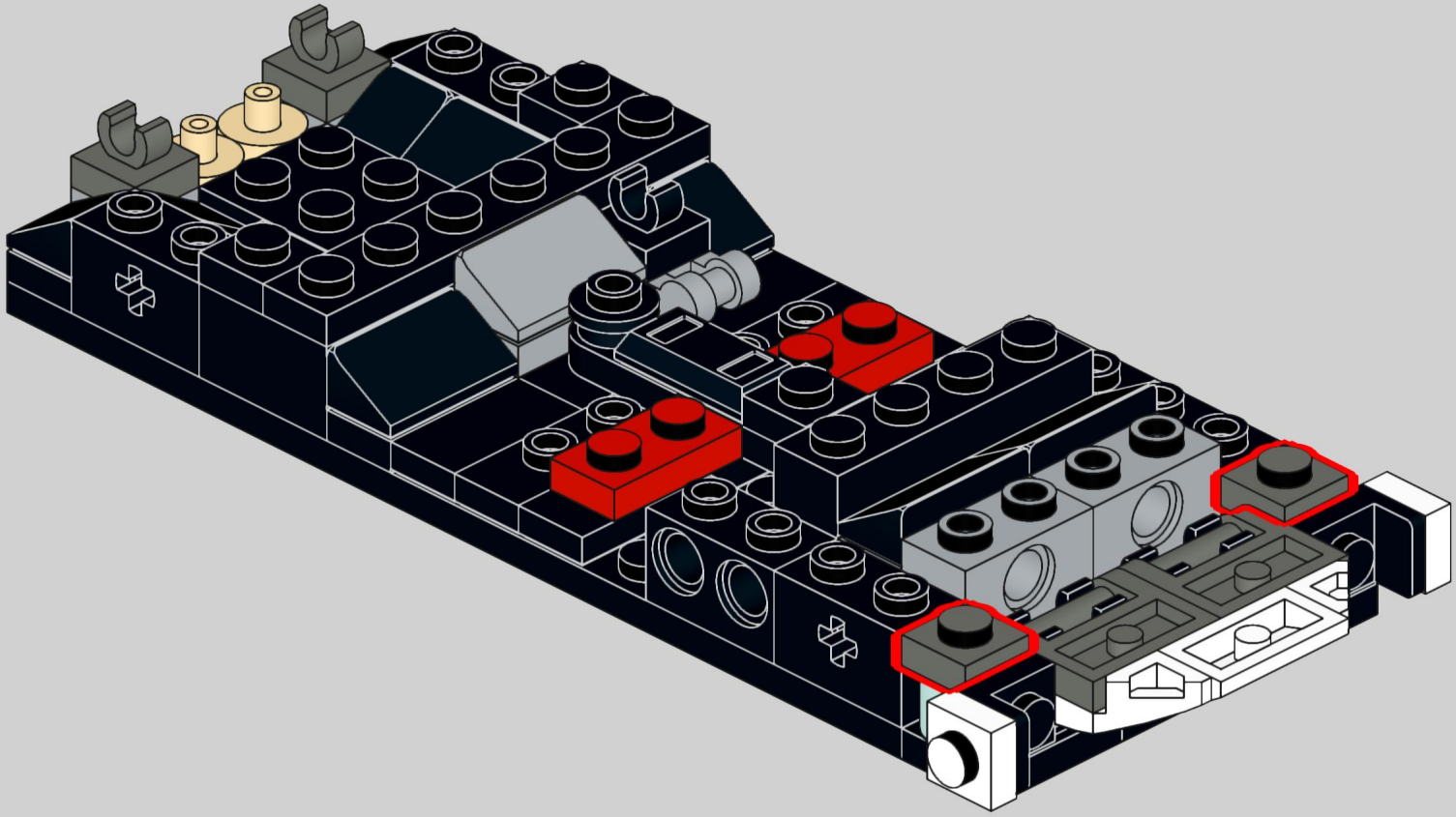

# 26

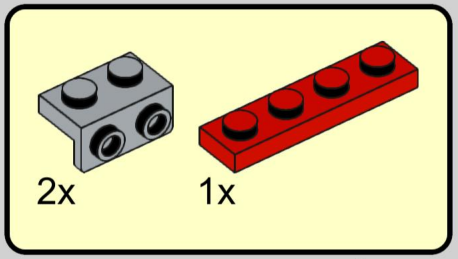


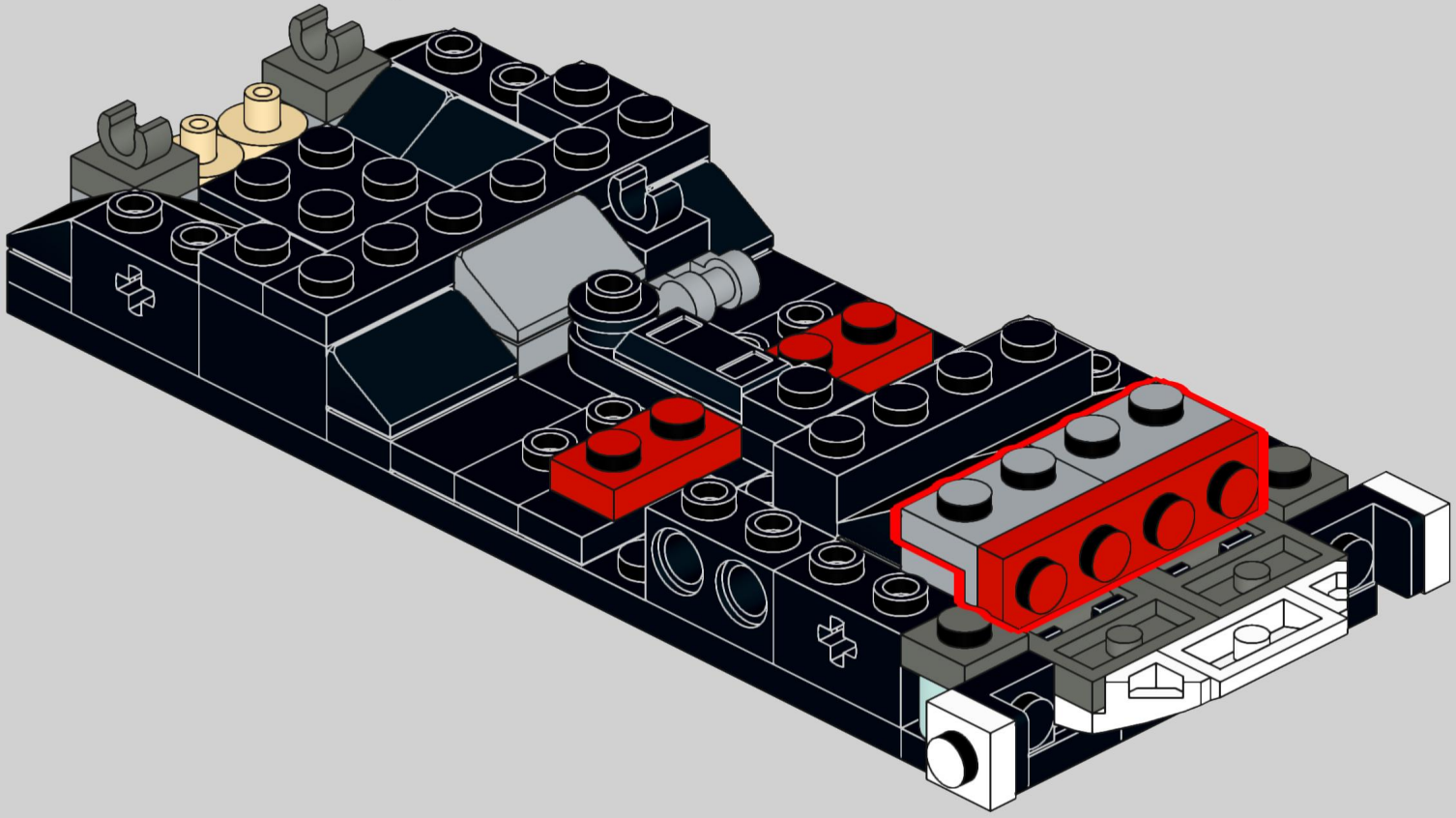

# 27

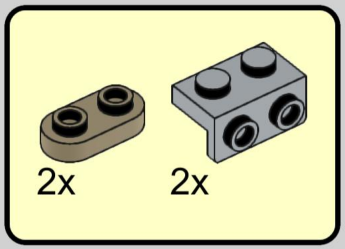


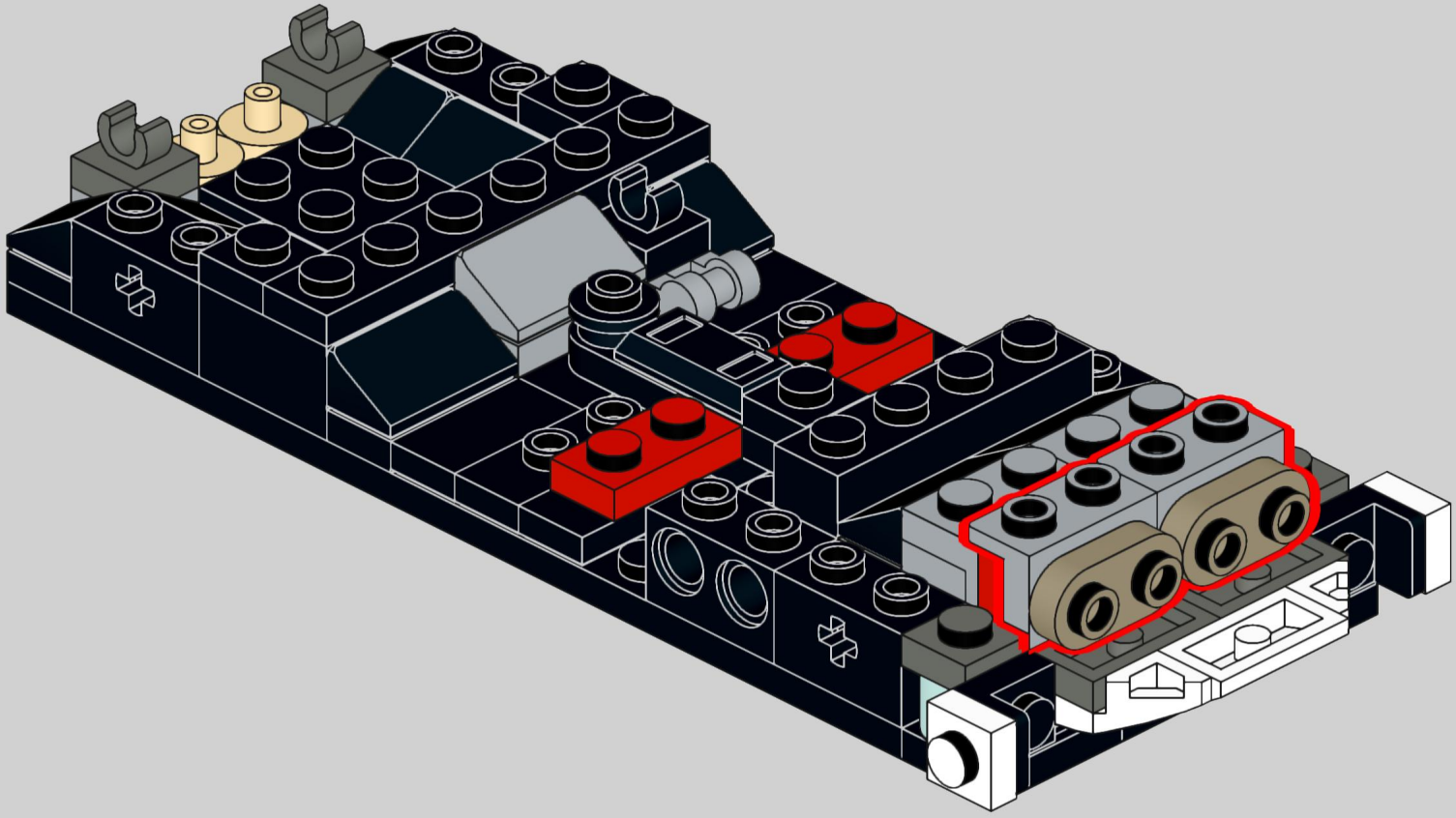

# 28

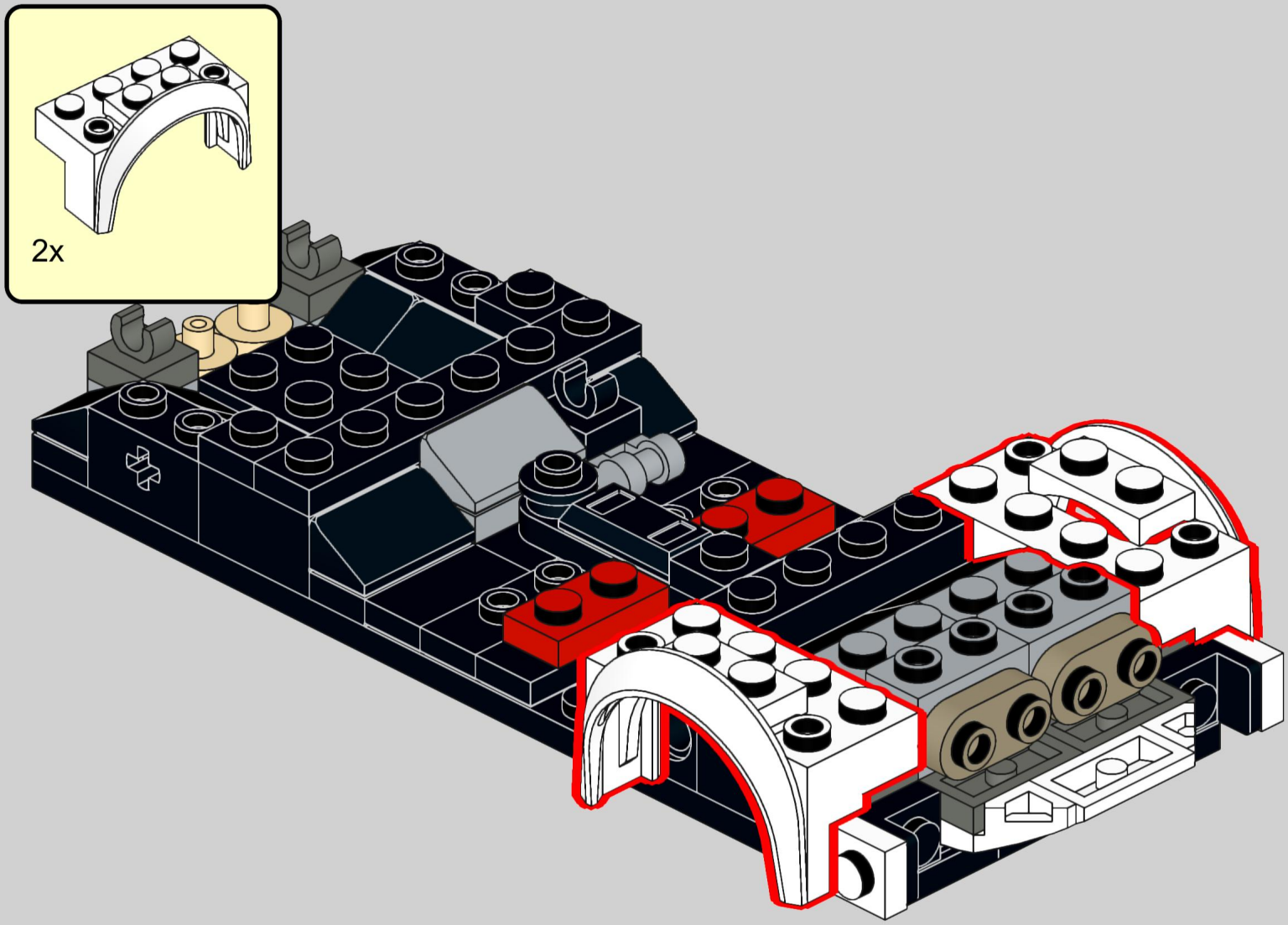

# 29

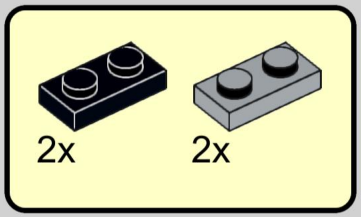


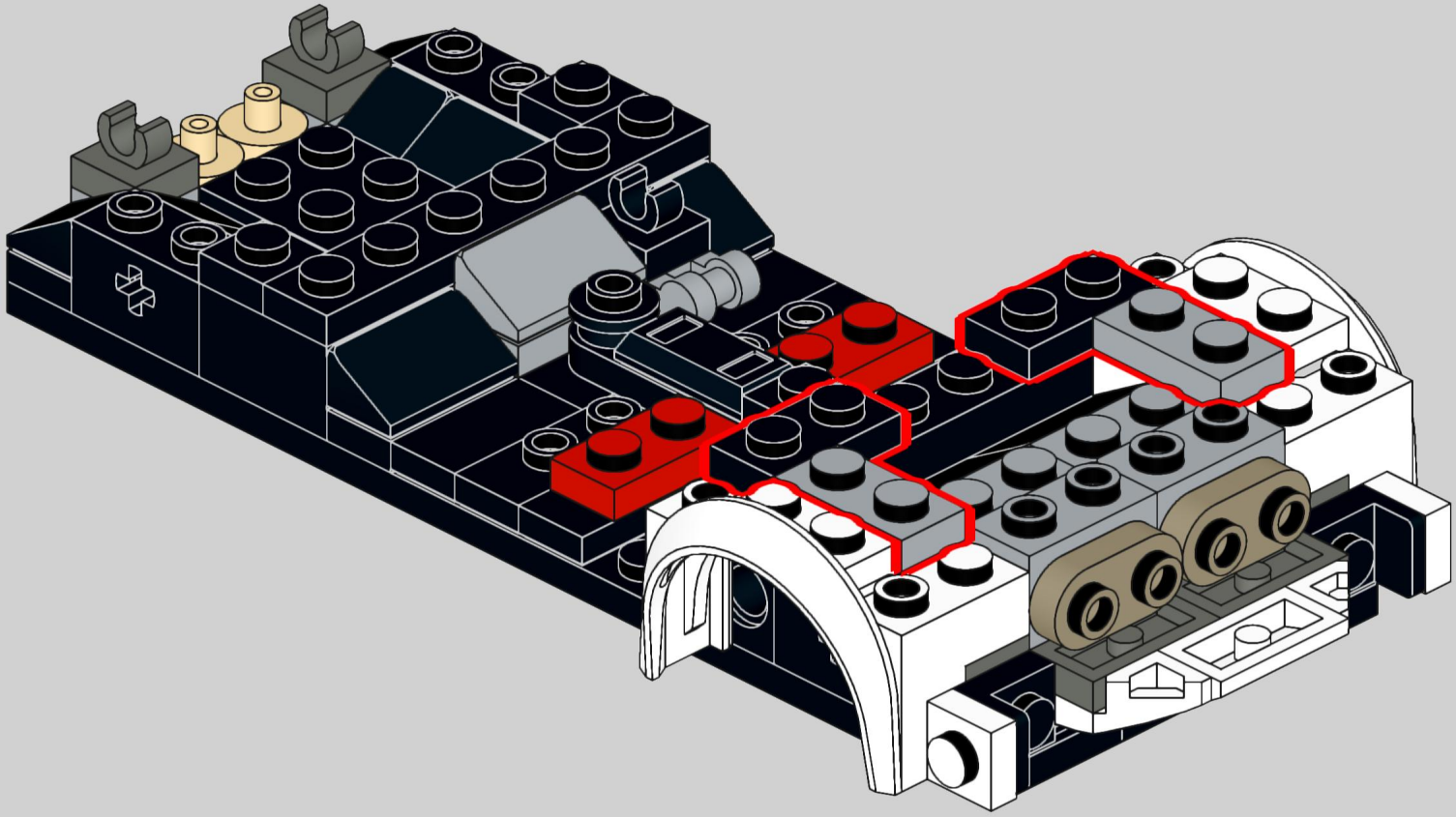

# 30

2x

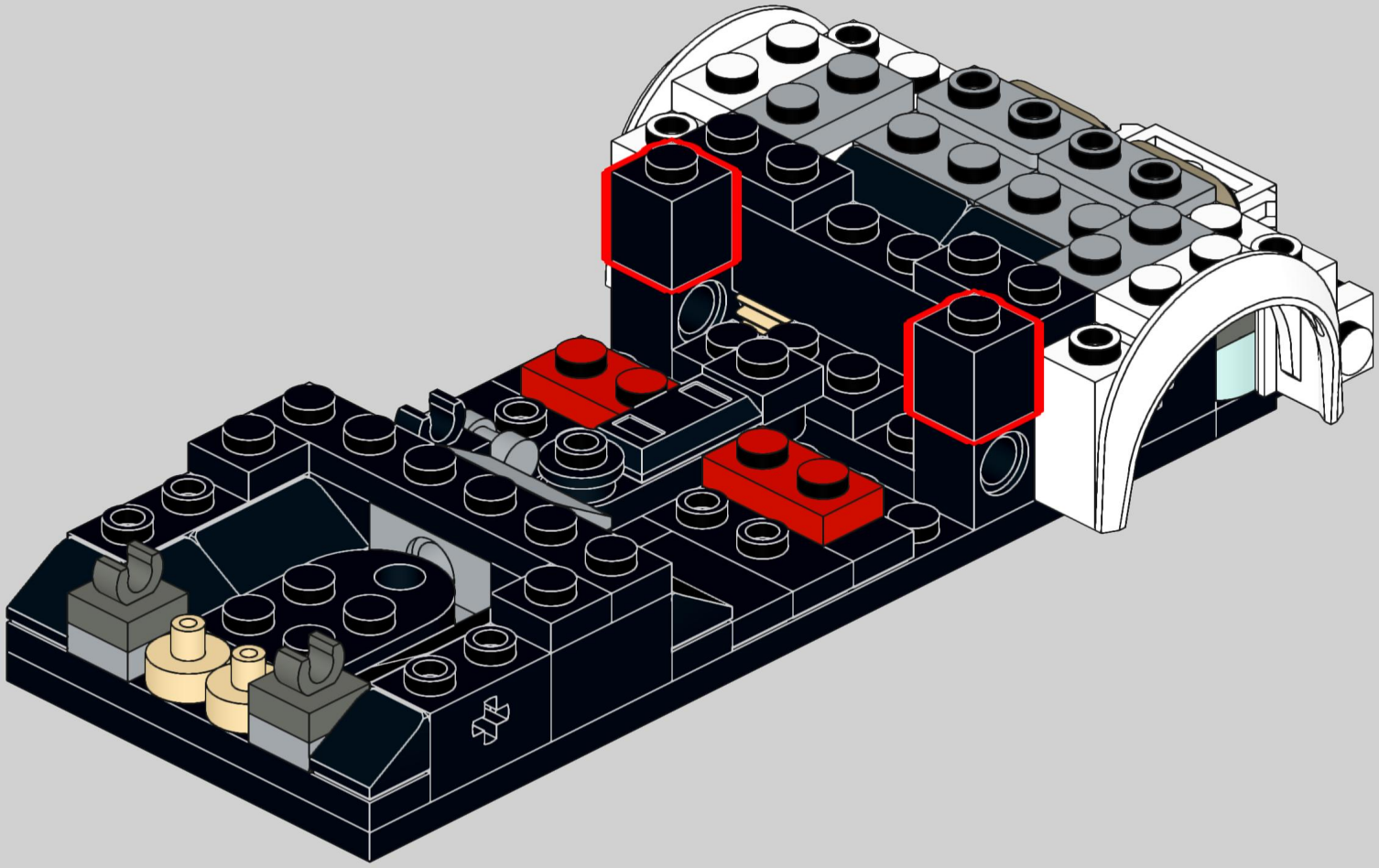

# 31

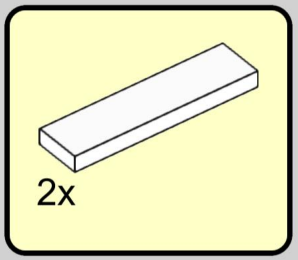


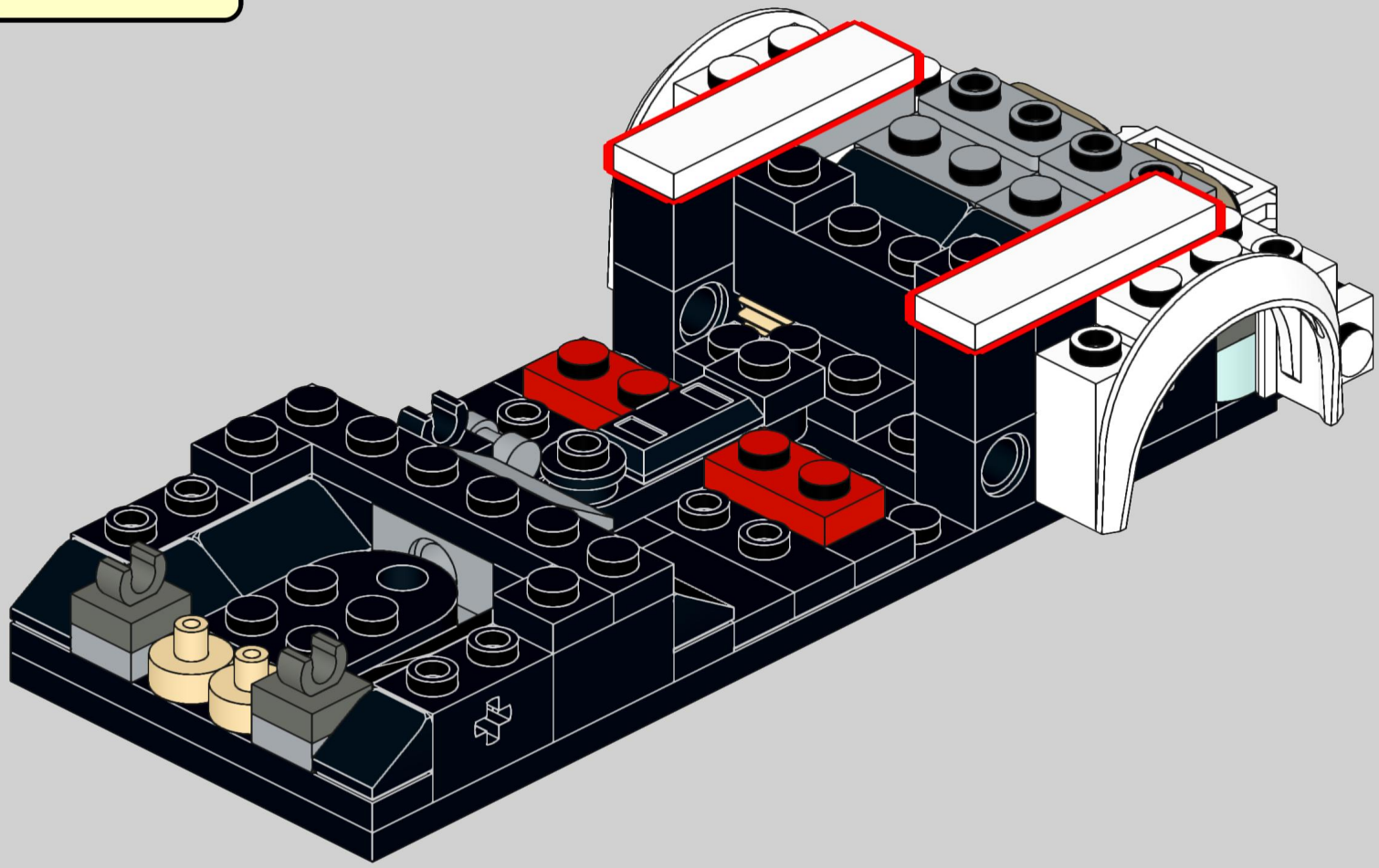

# 32

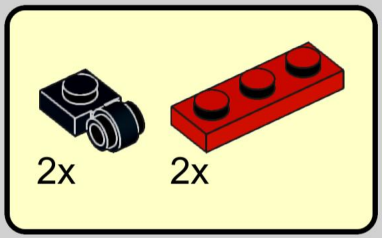


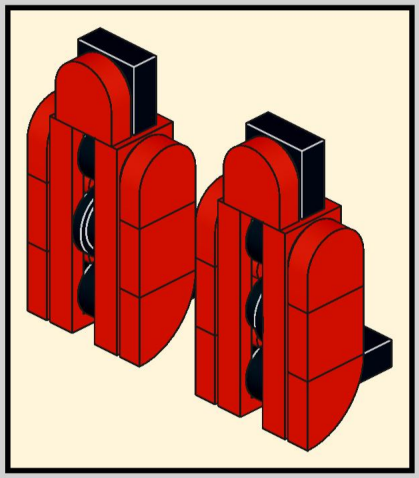

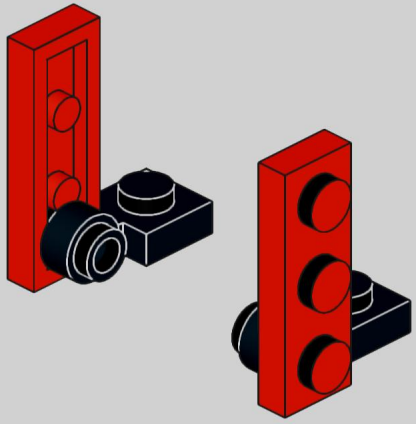

# 33

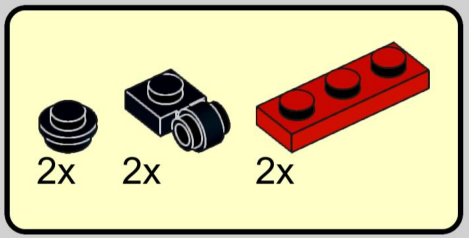


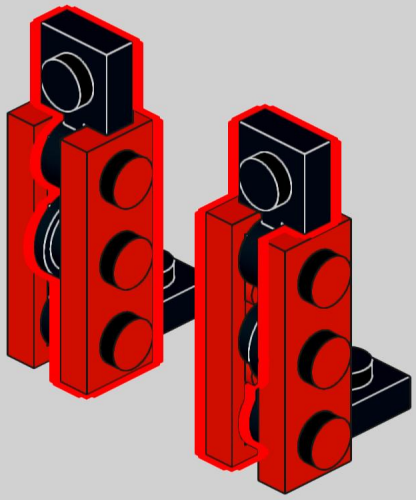

# 34

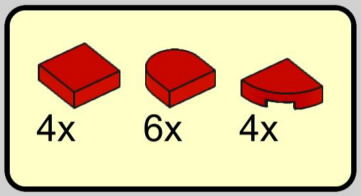


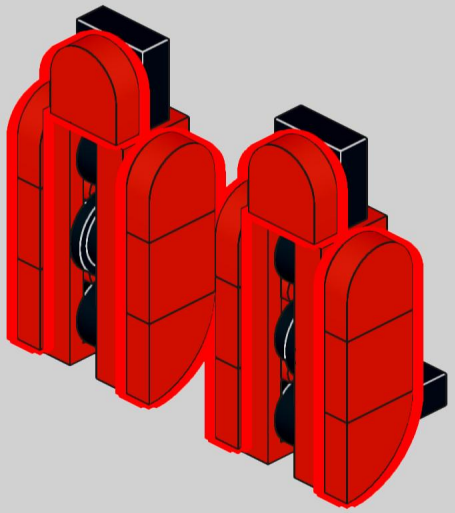

35

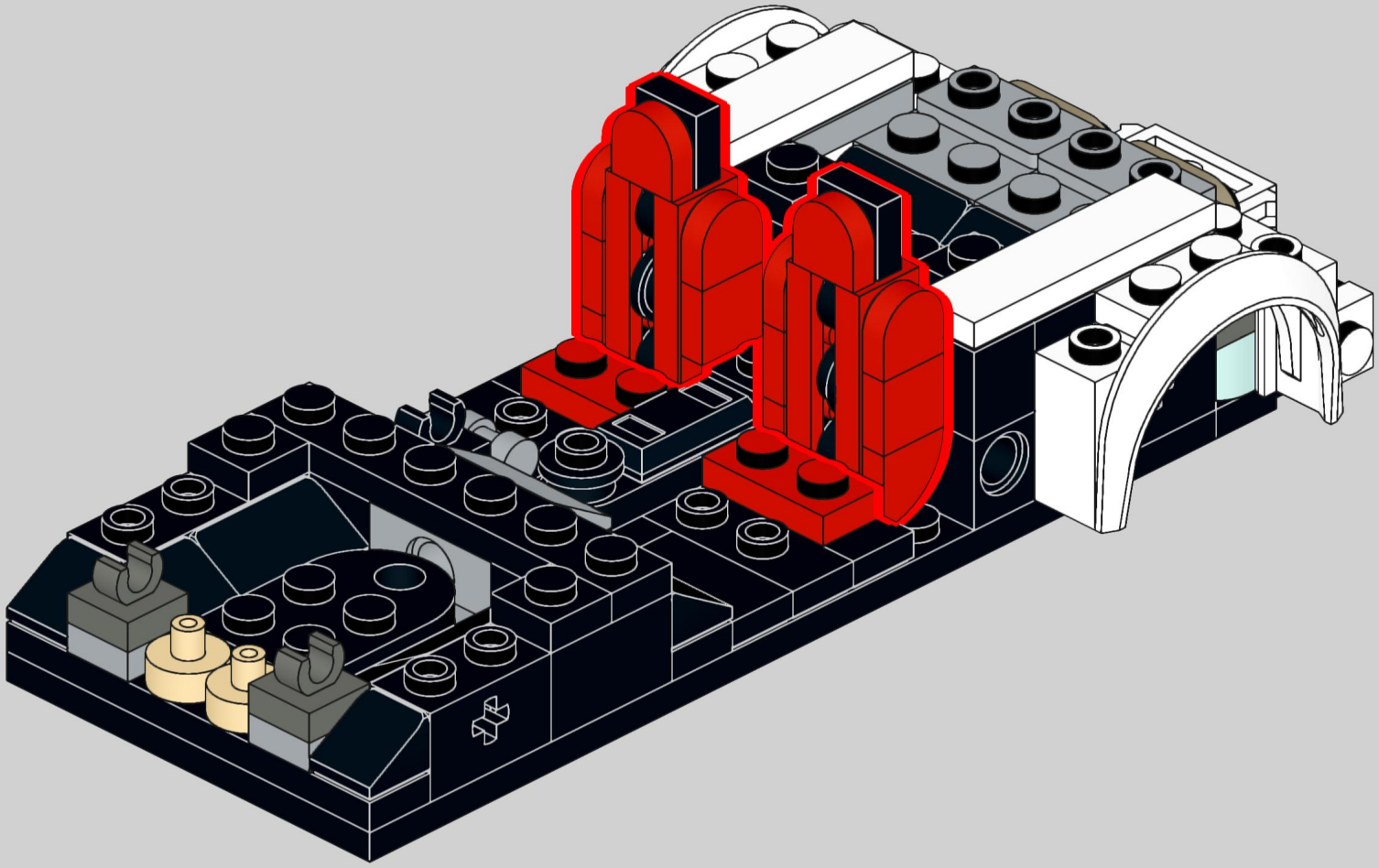

# 36

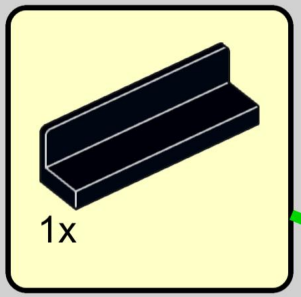

# 37

2x

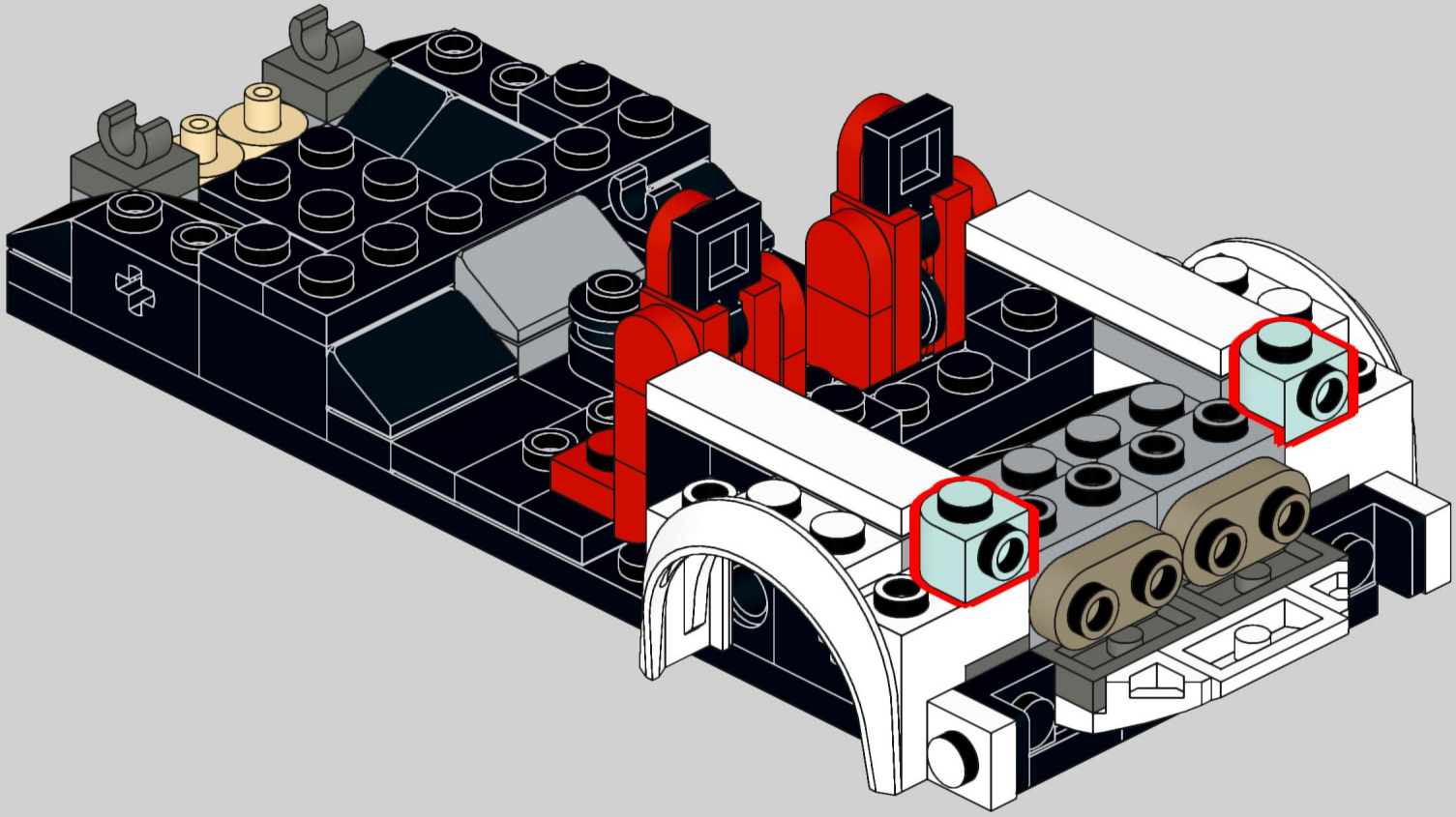

# 38

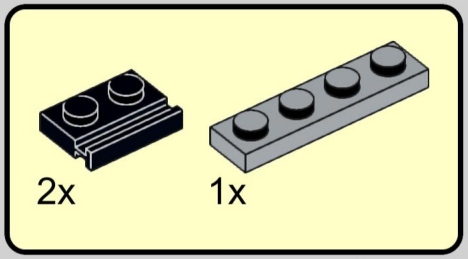


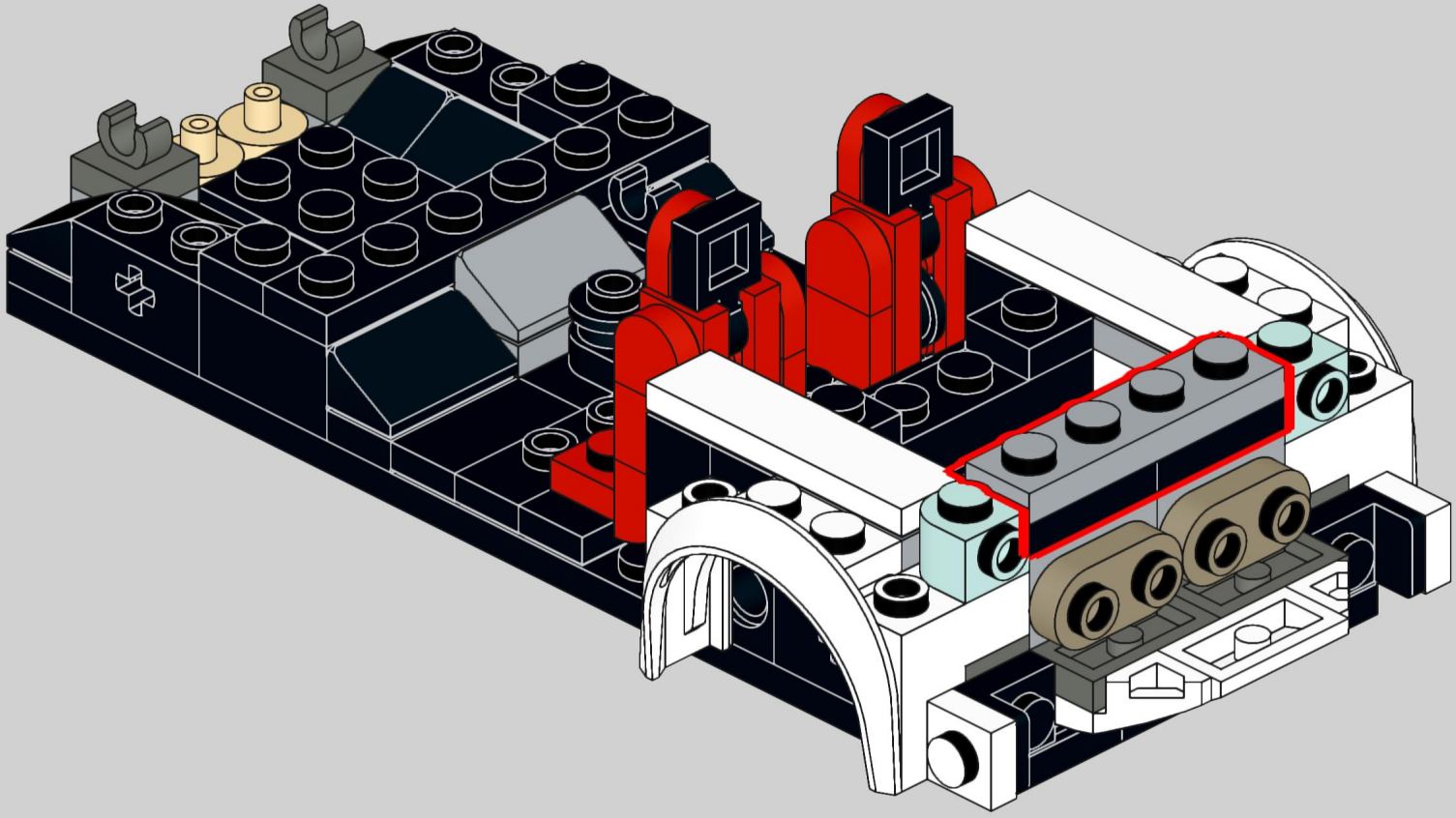

# 39

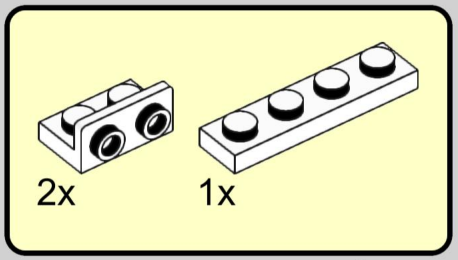


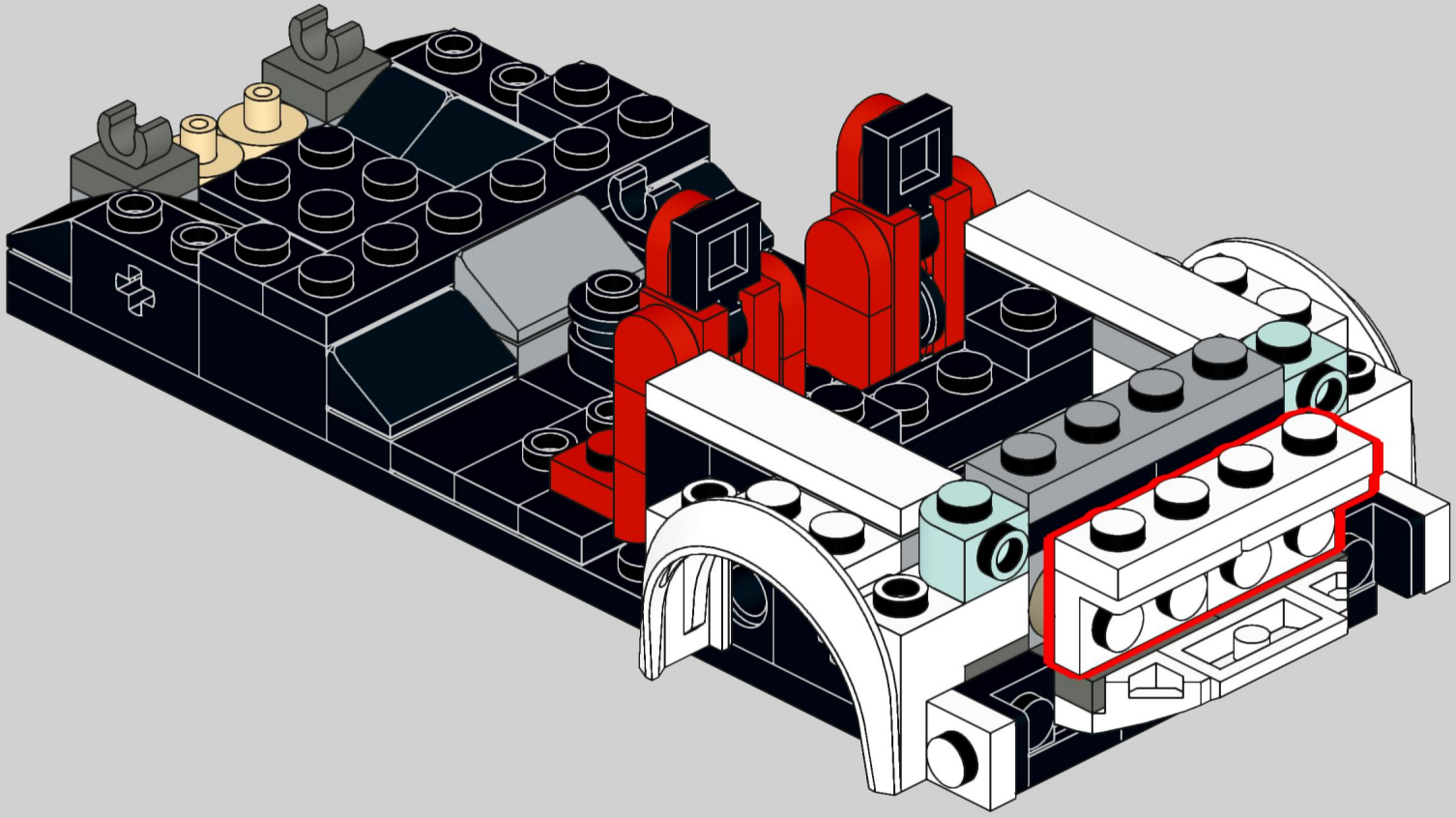

# 40

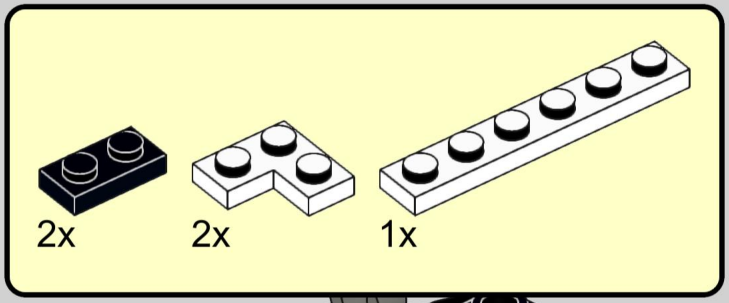


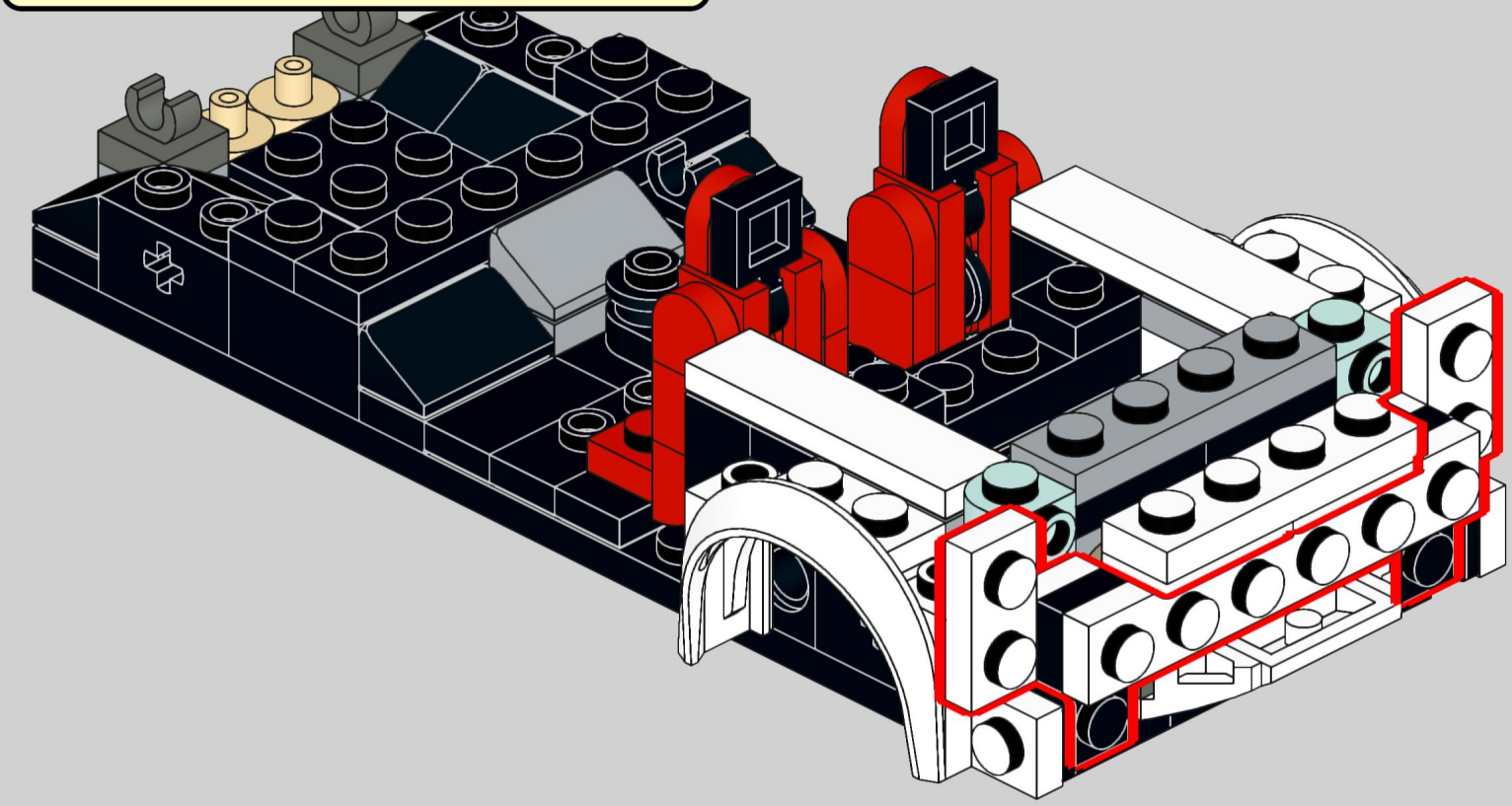

# 41

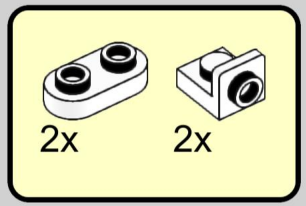


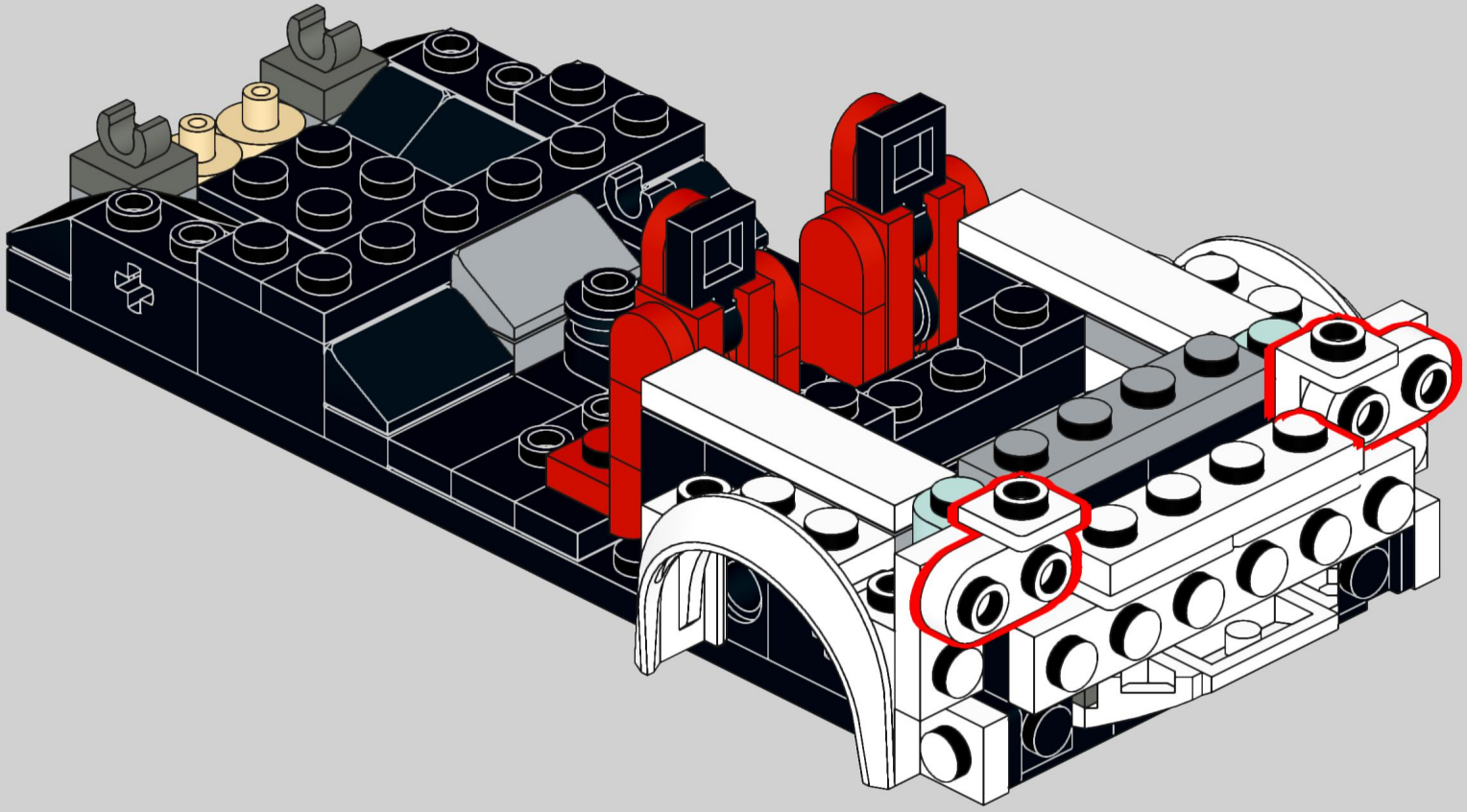

# 42

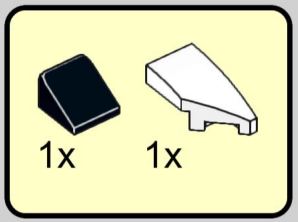


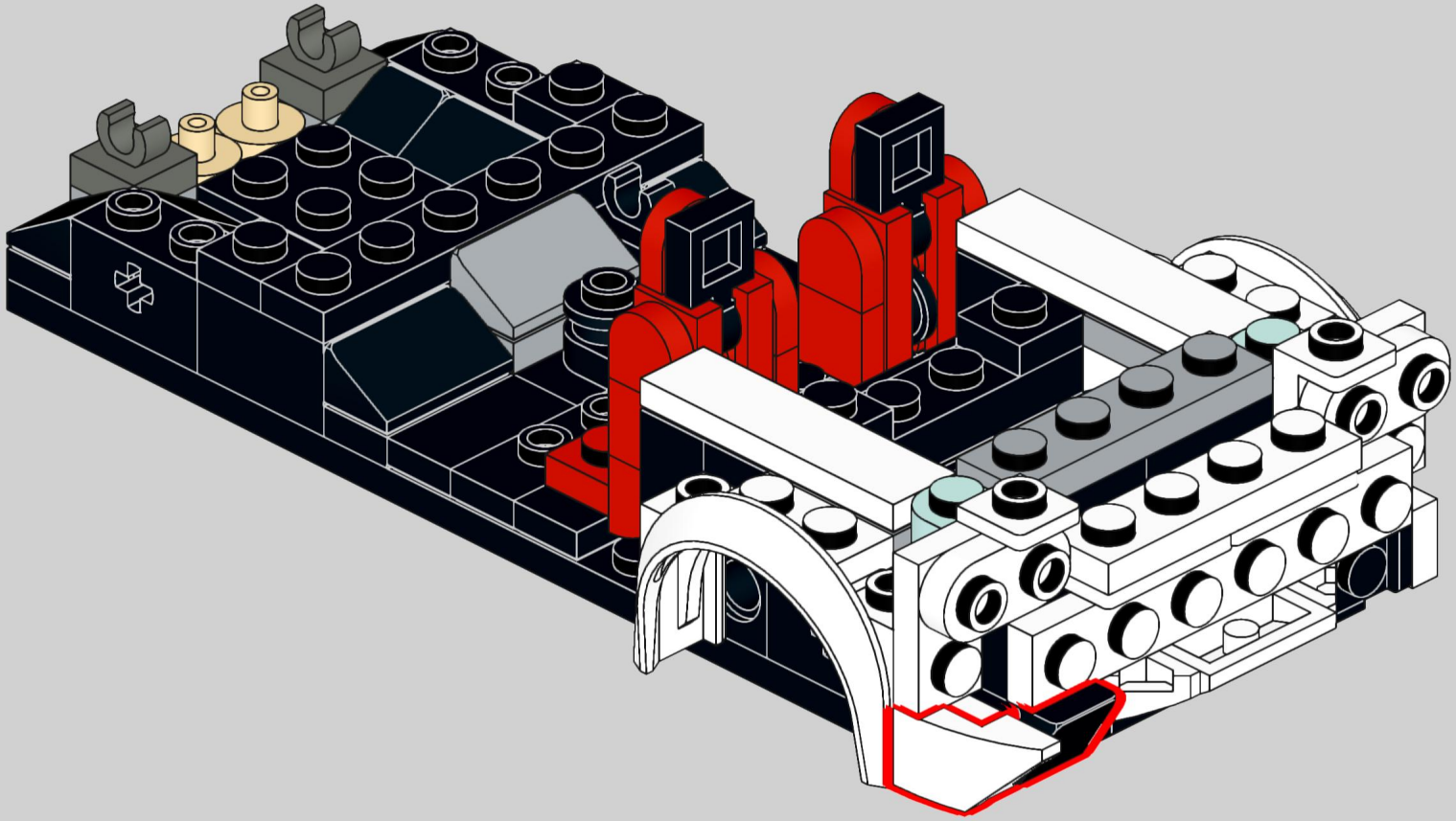

# 43

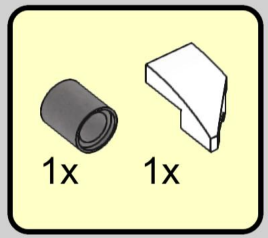


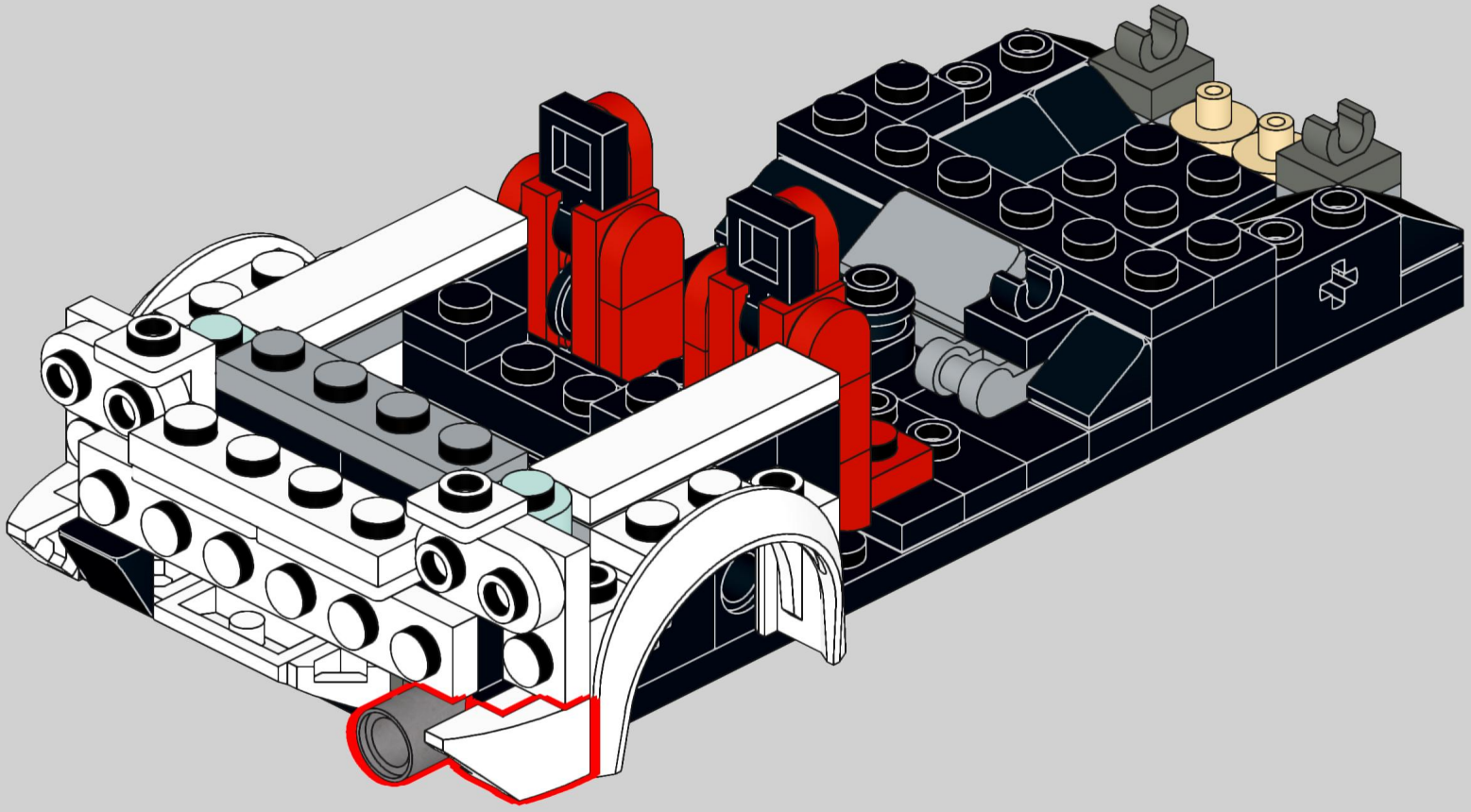

# 44

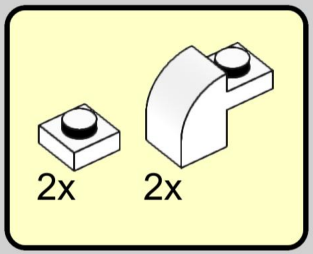


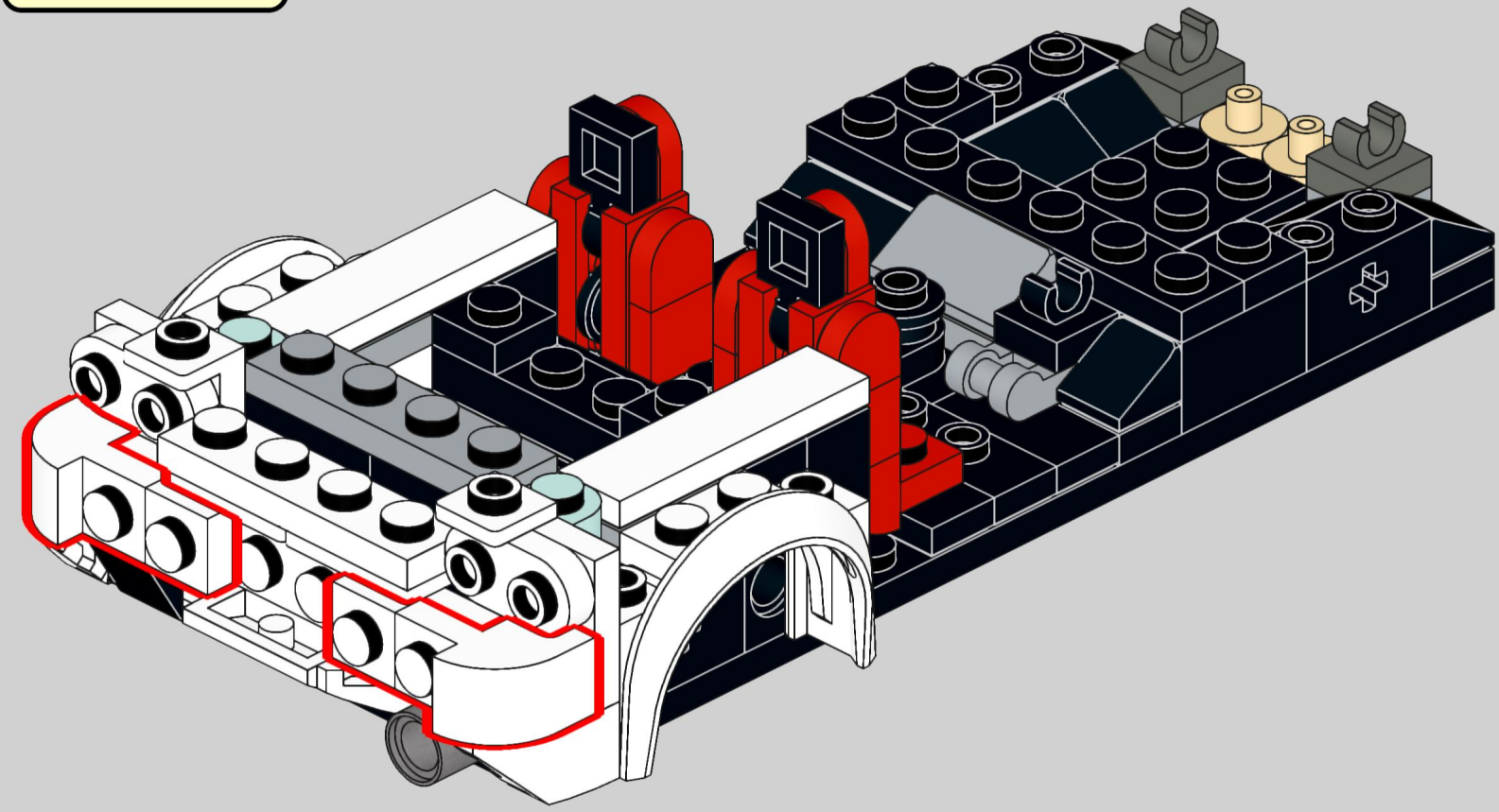

# 45

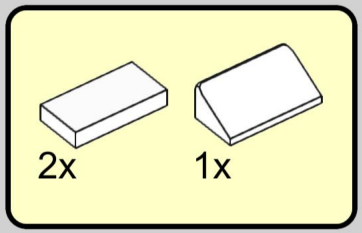


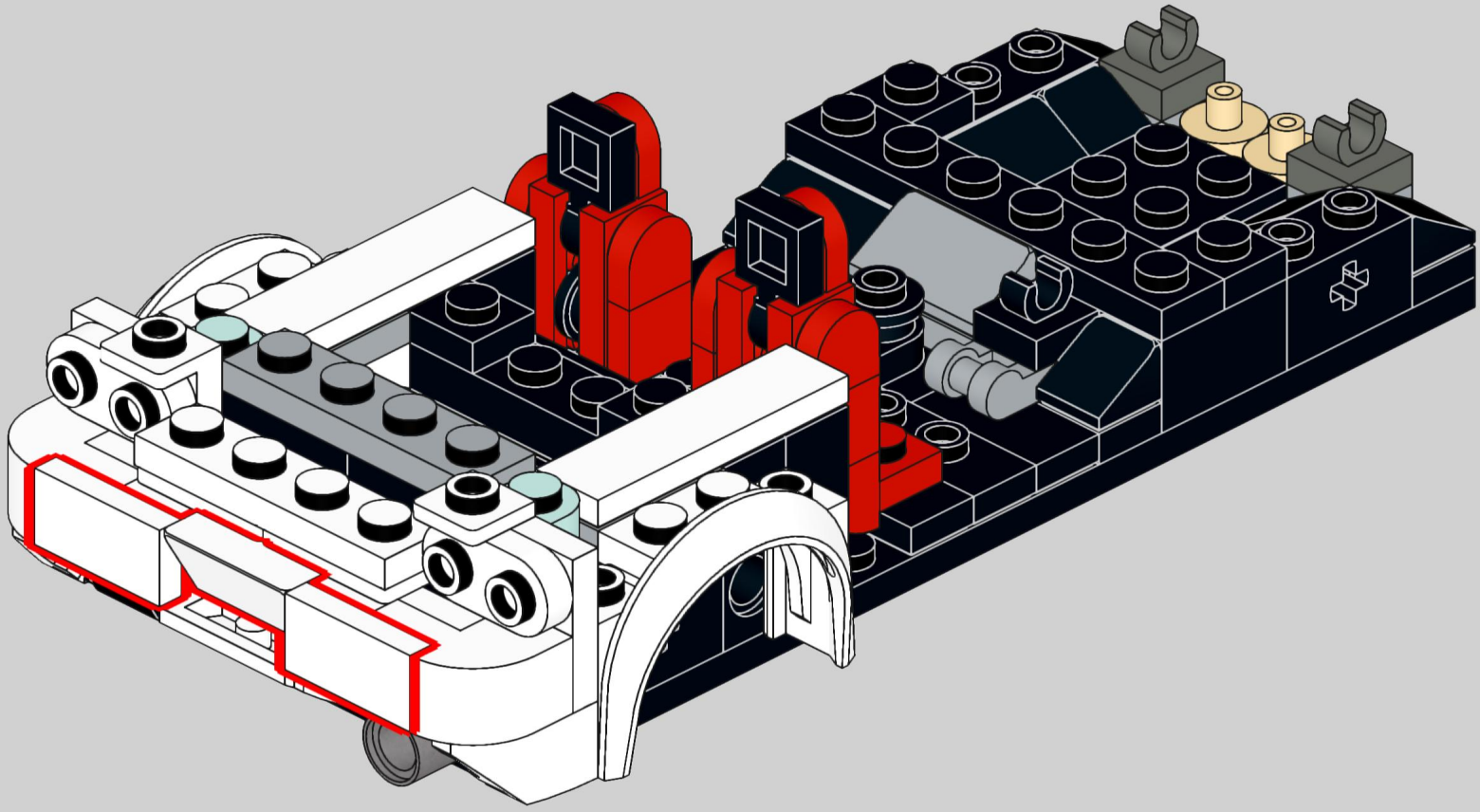

# 46

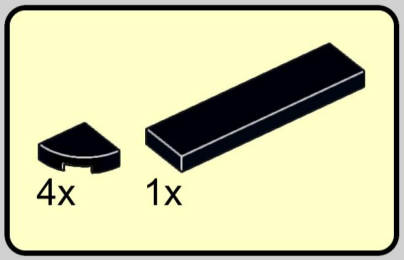


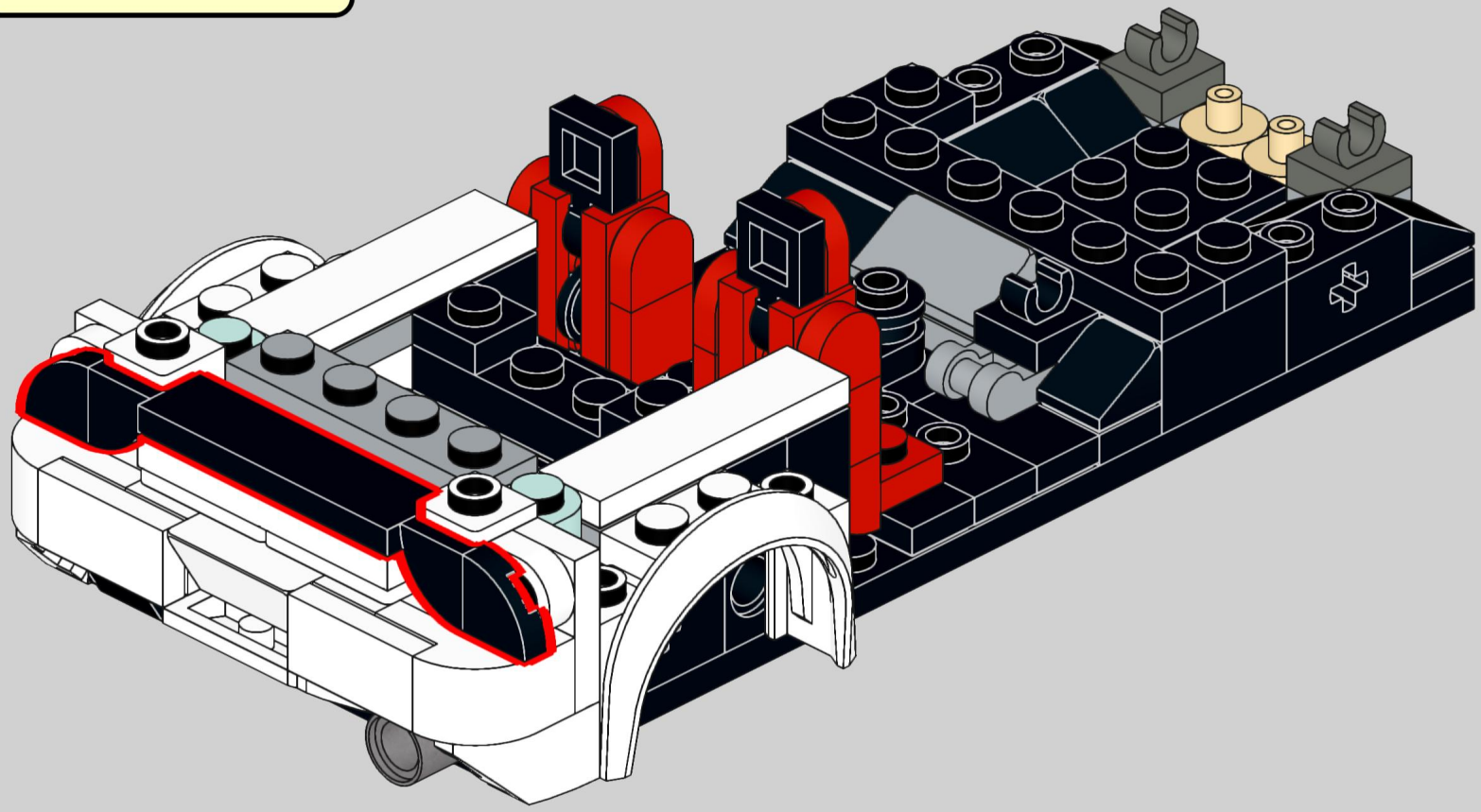

# 47

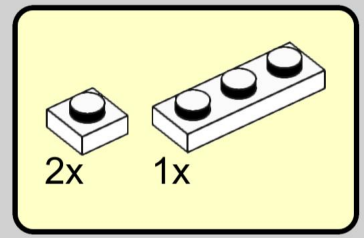


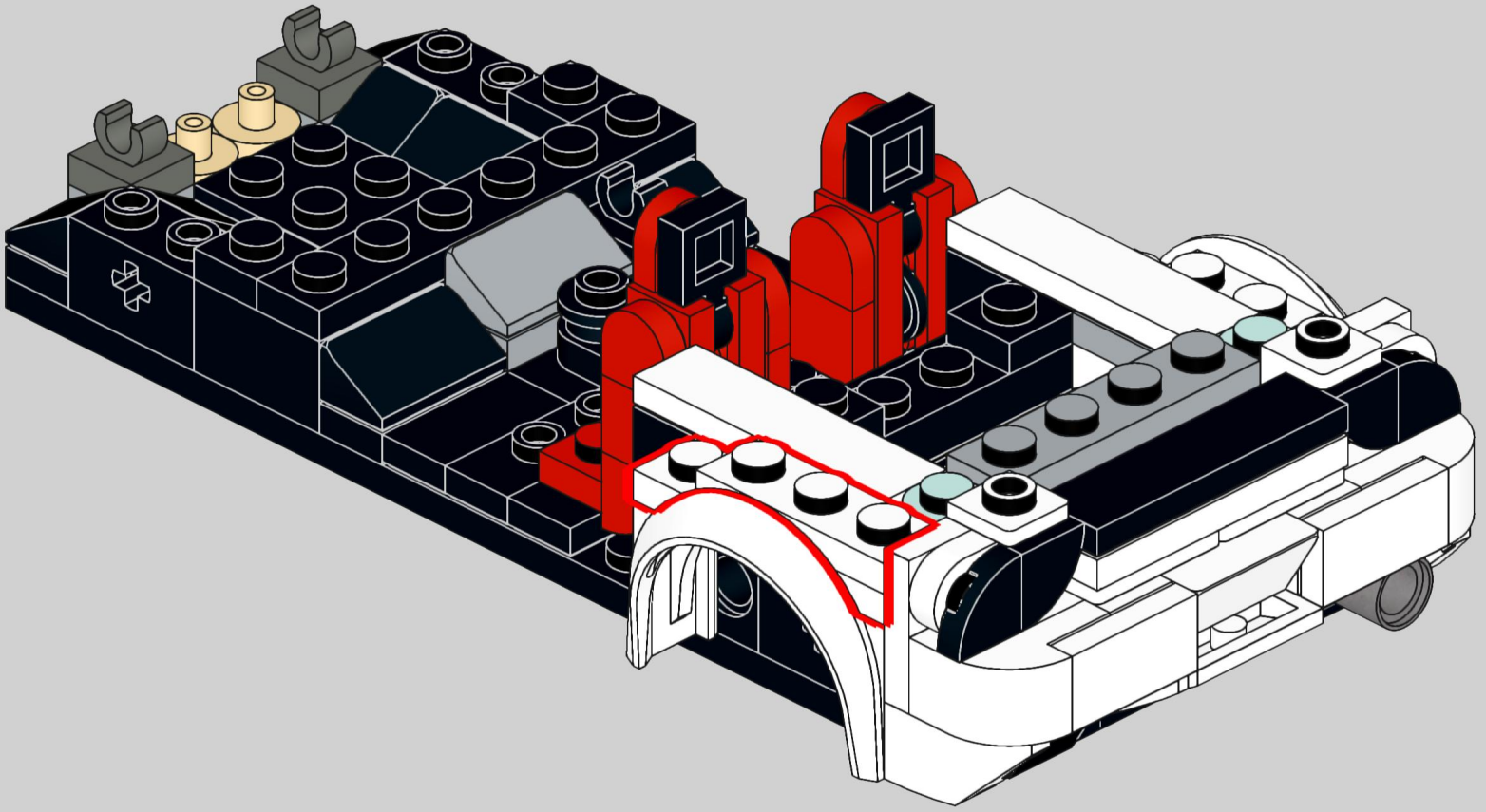

# 48

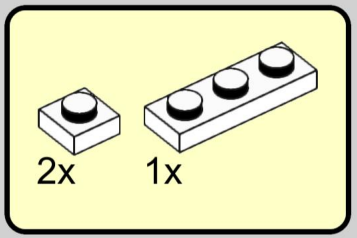


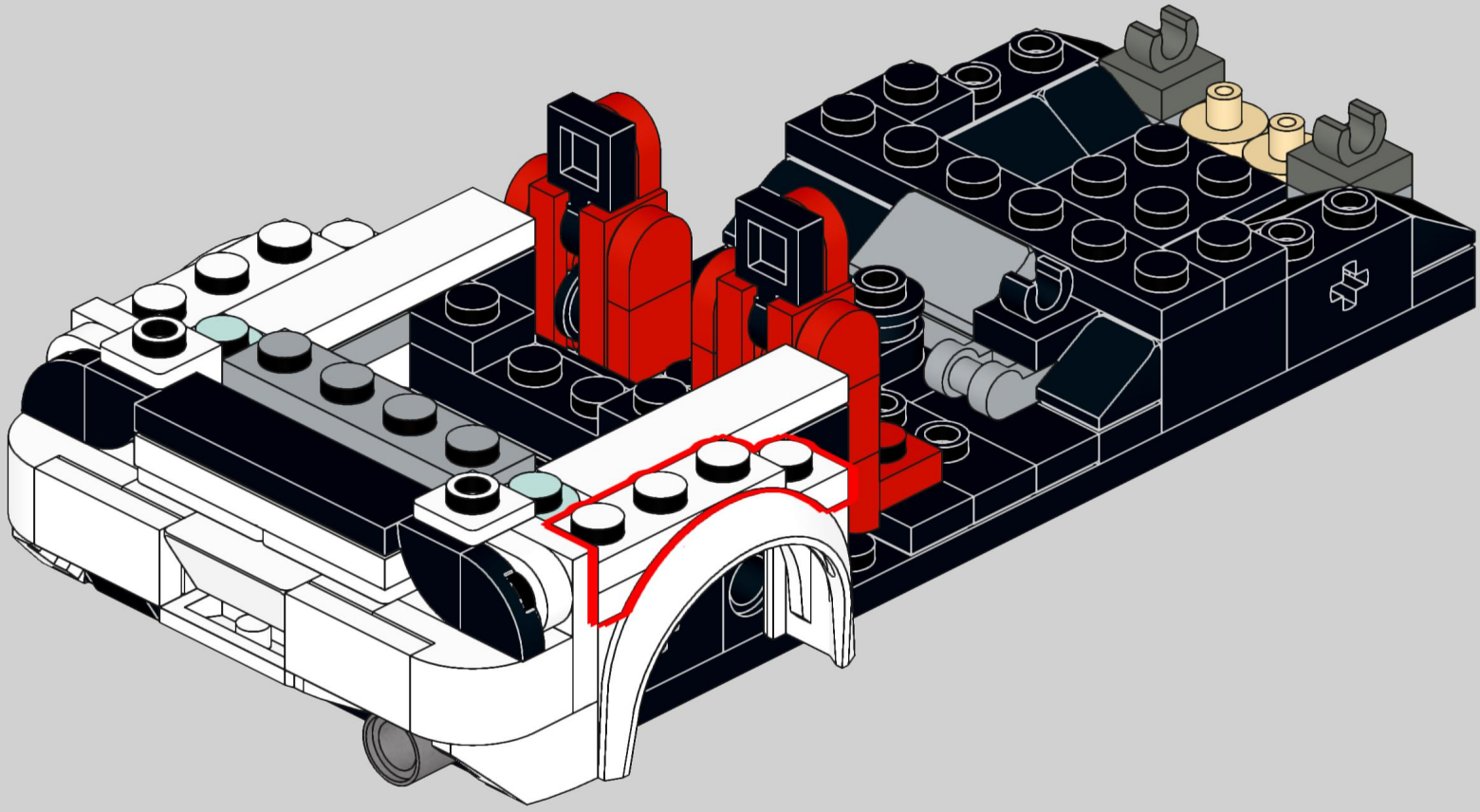

# 49

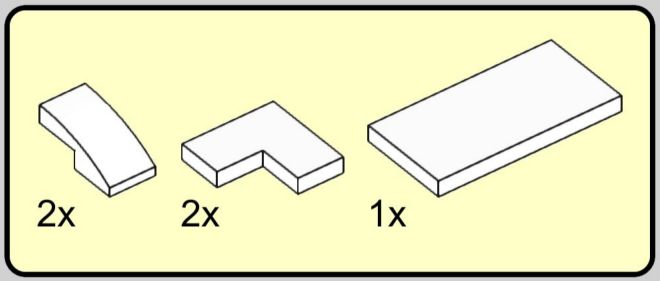


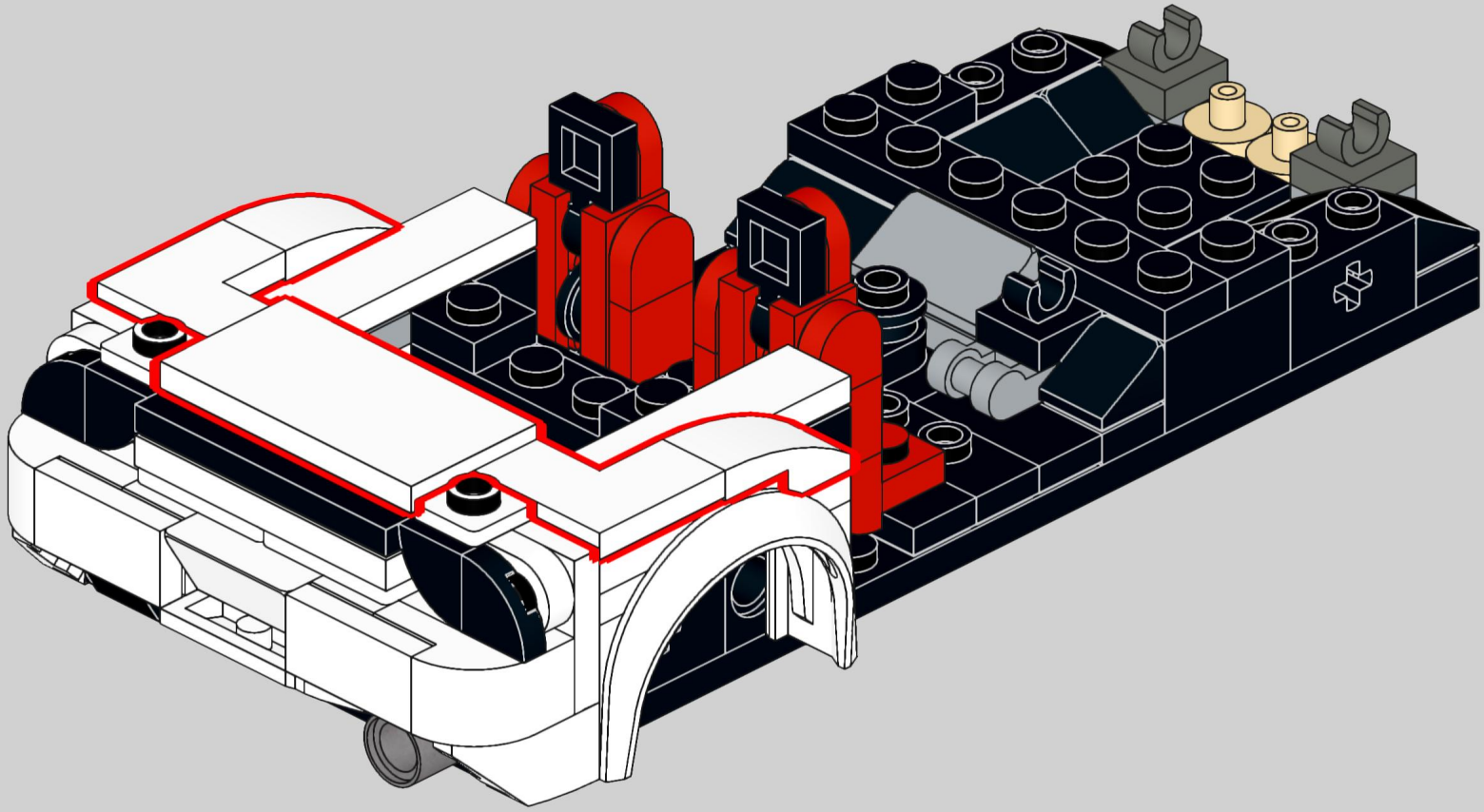

# 50

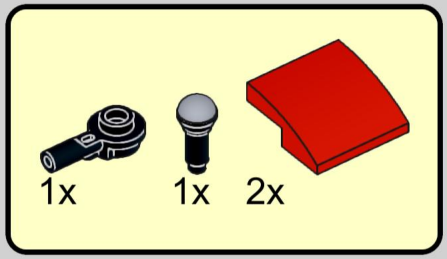


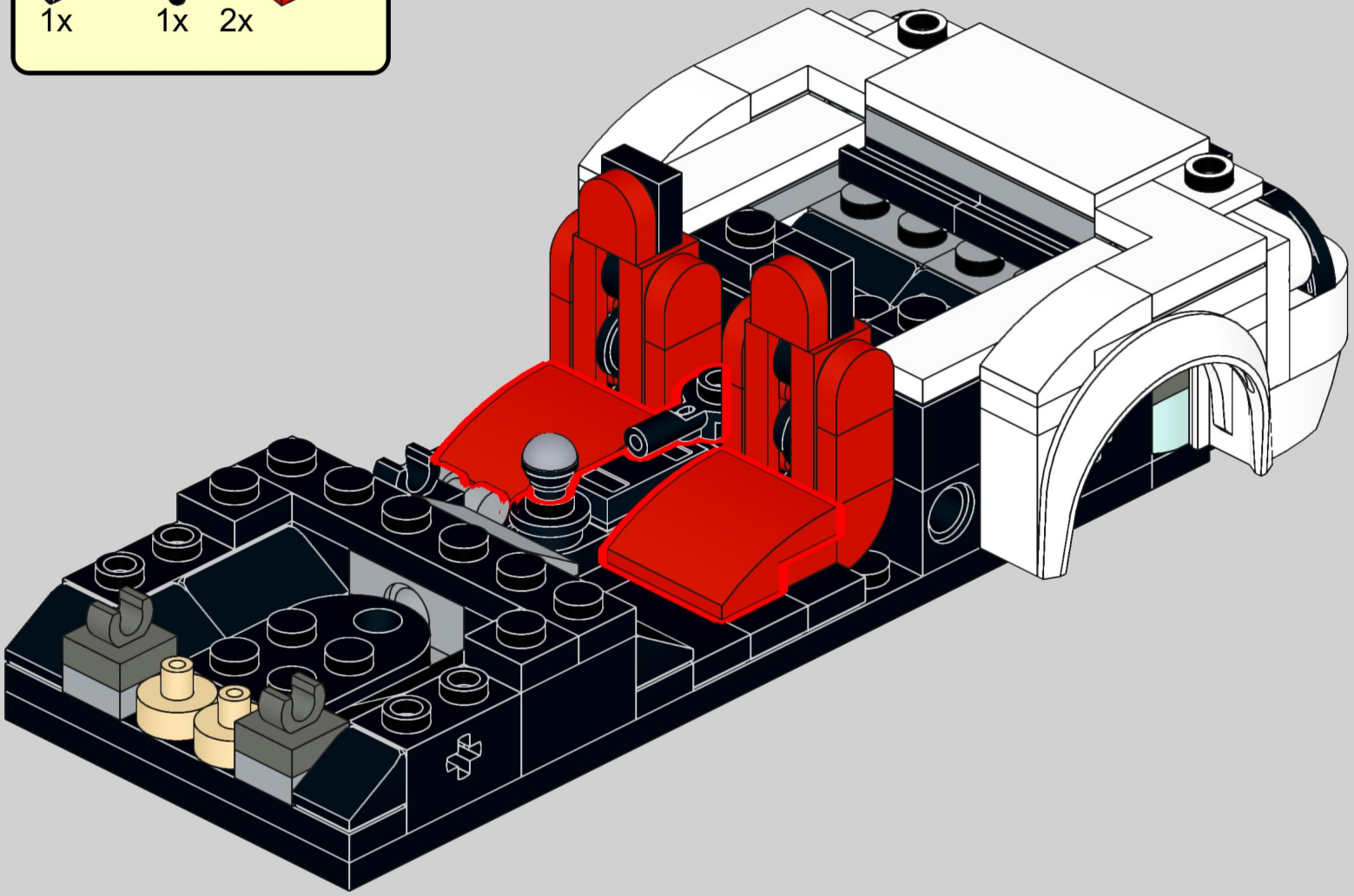

# 51

2x

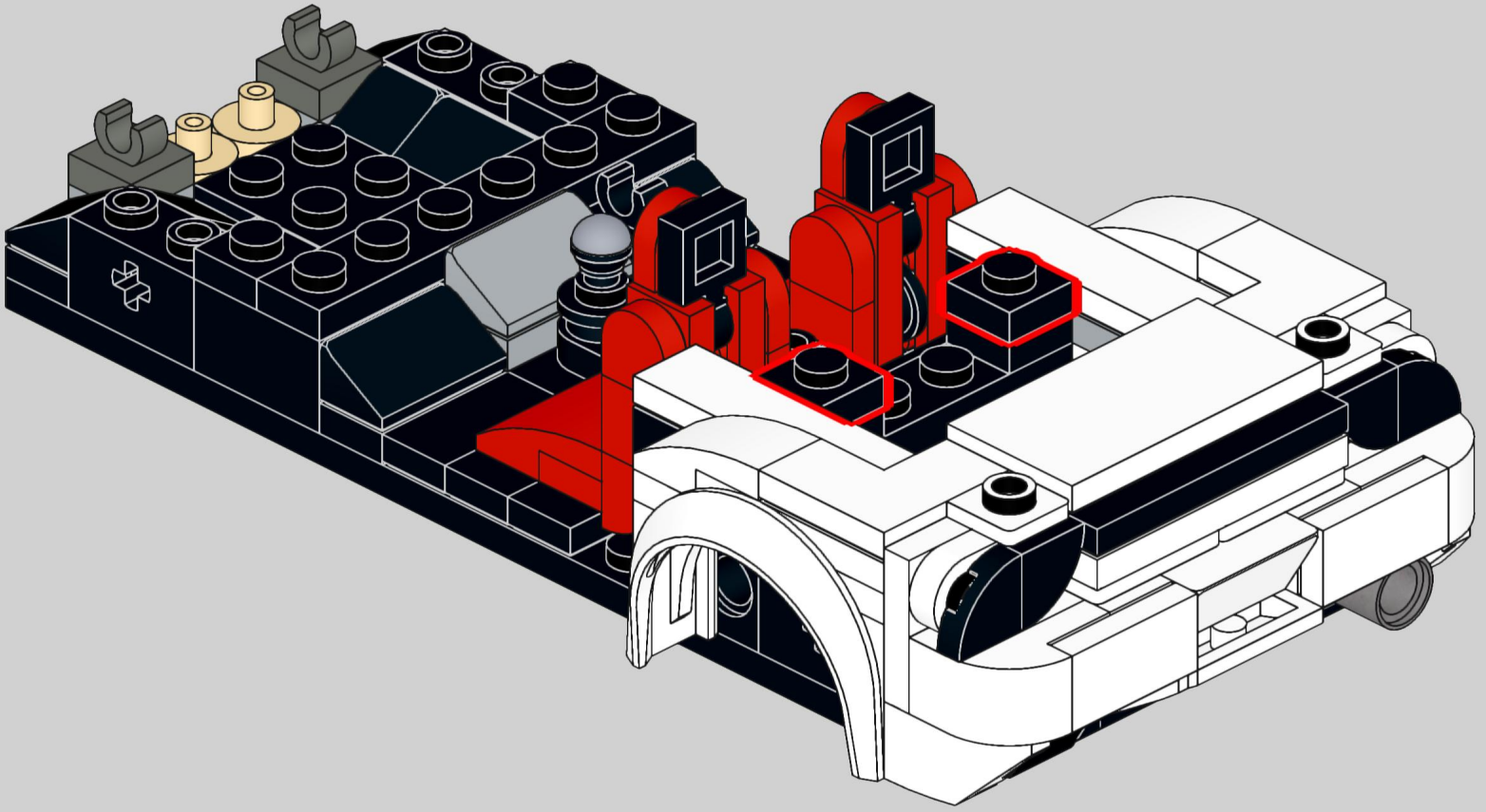

# 52




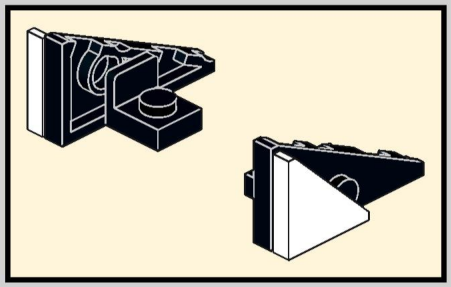

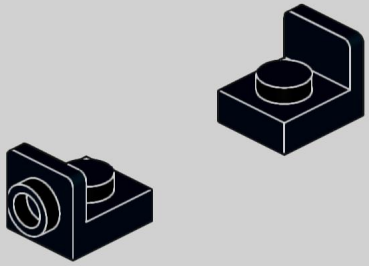

# 53

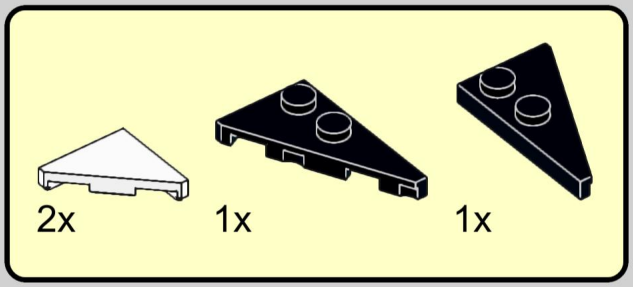


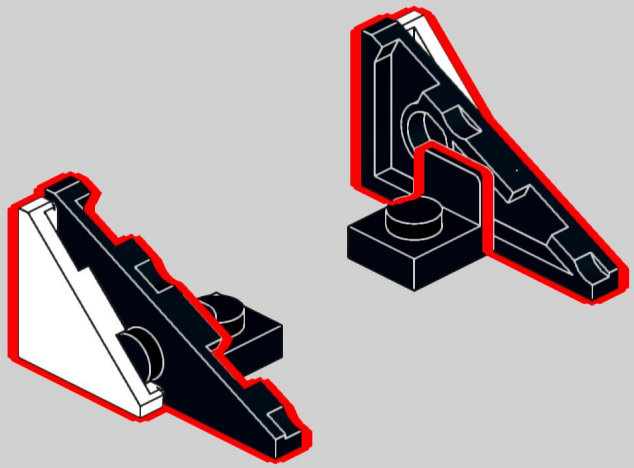

# 54

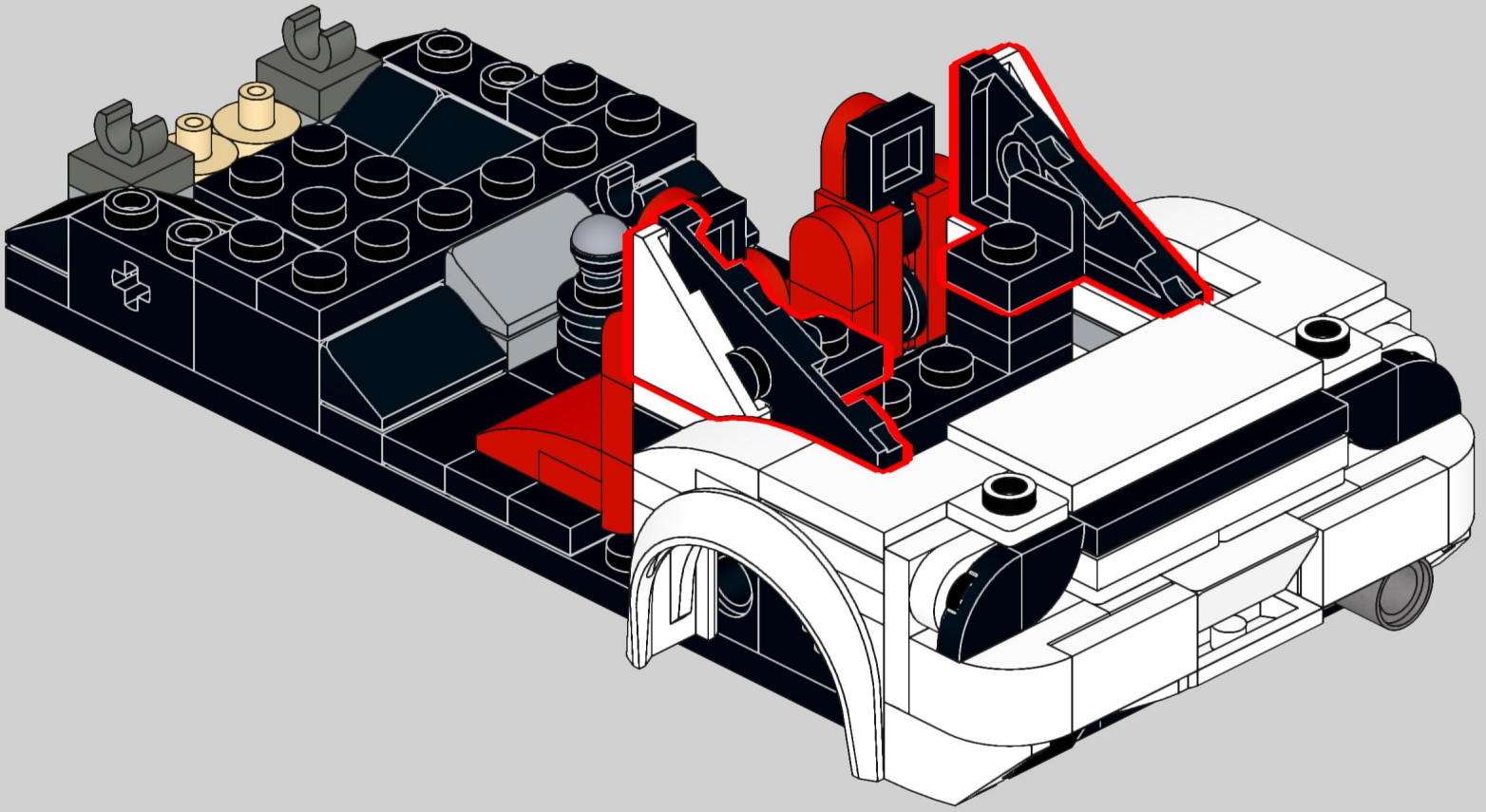

# 55

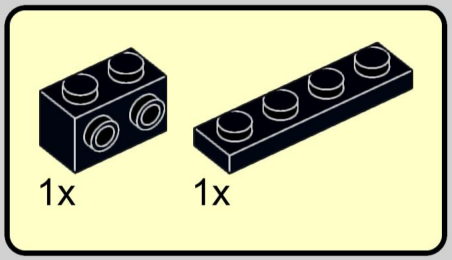


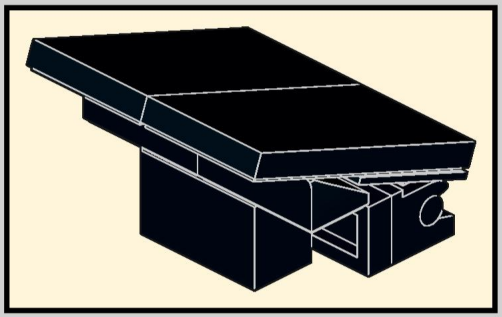

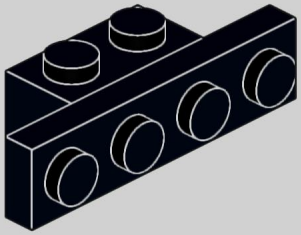

# 56




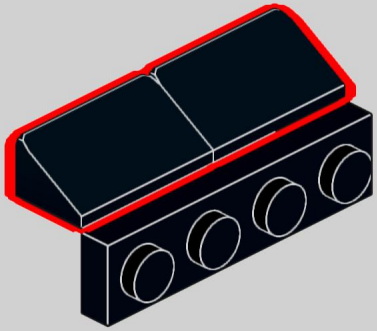

# 57

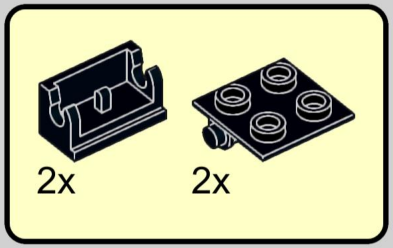


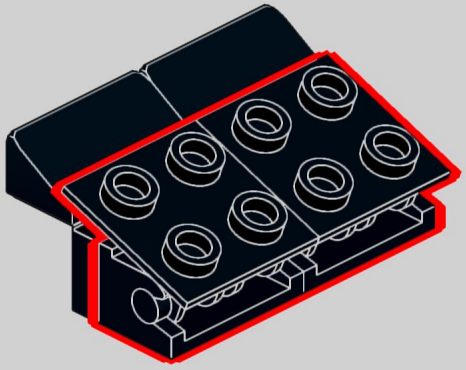

# 58

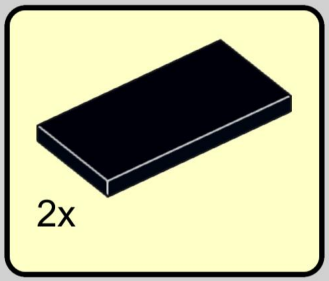


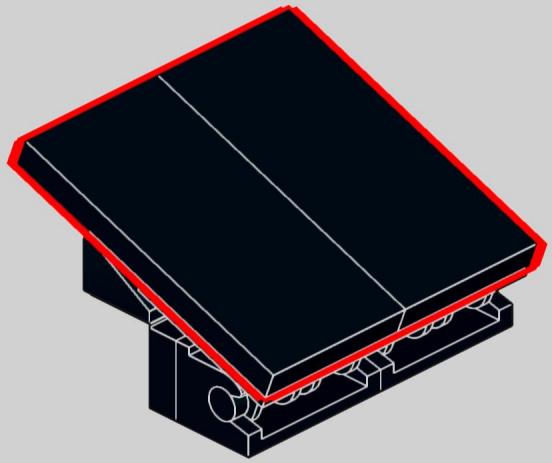

# 59

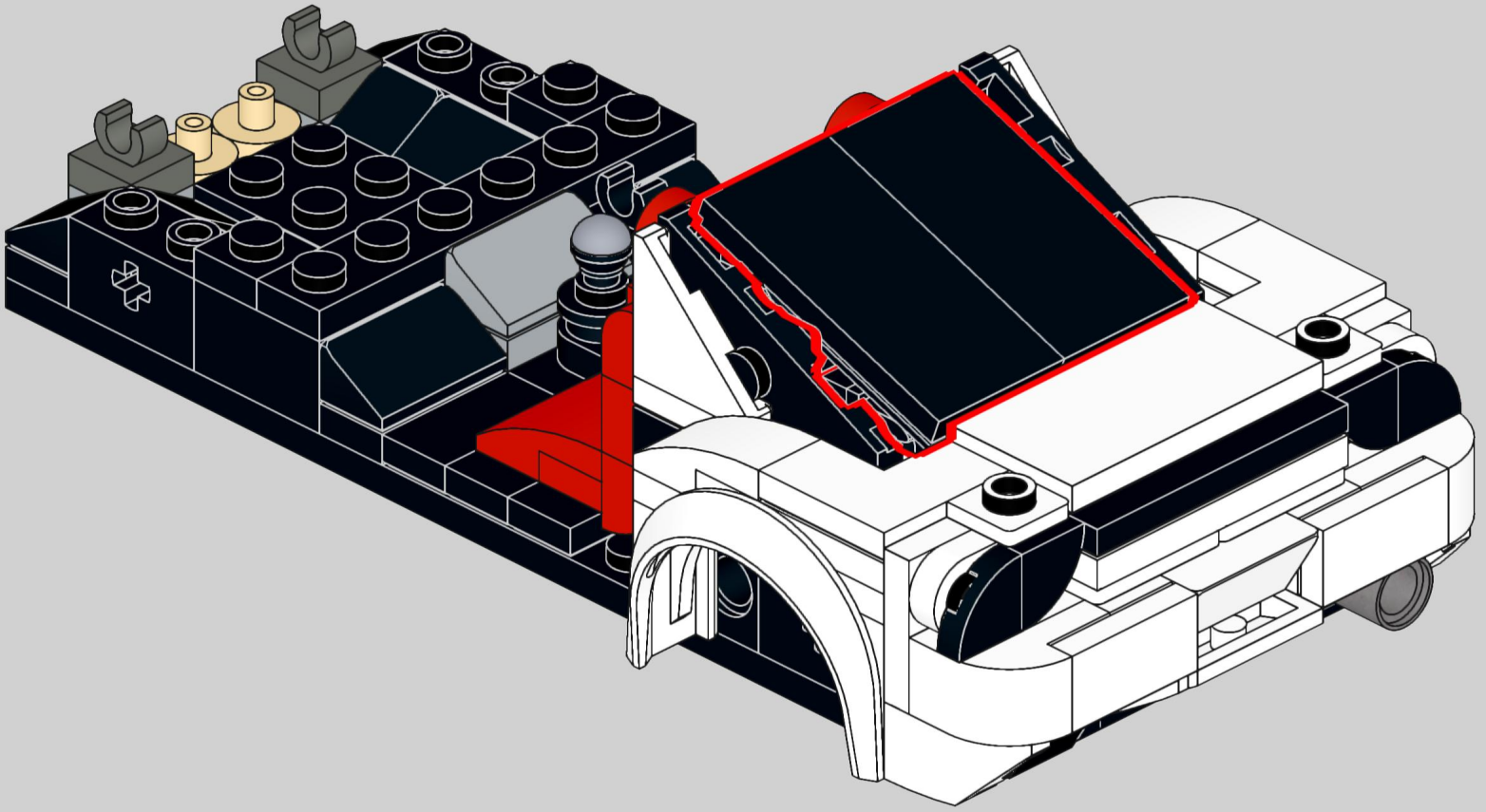

# 60

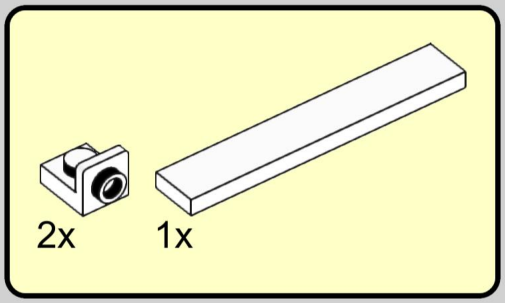


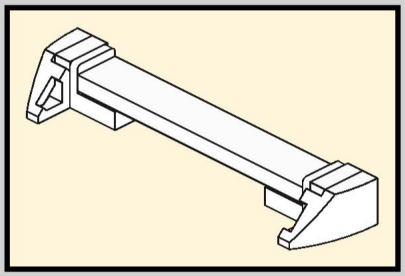

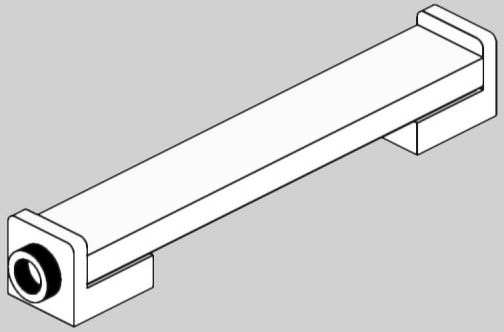

# 61

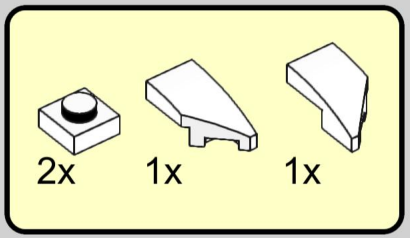


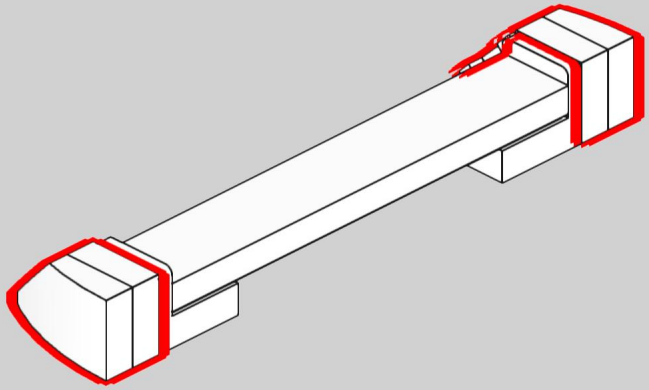

# 62

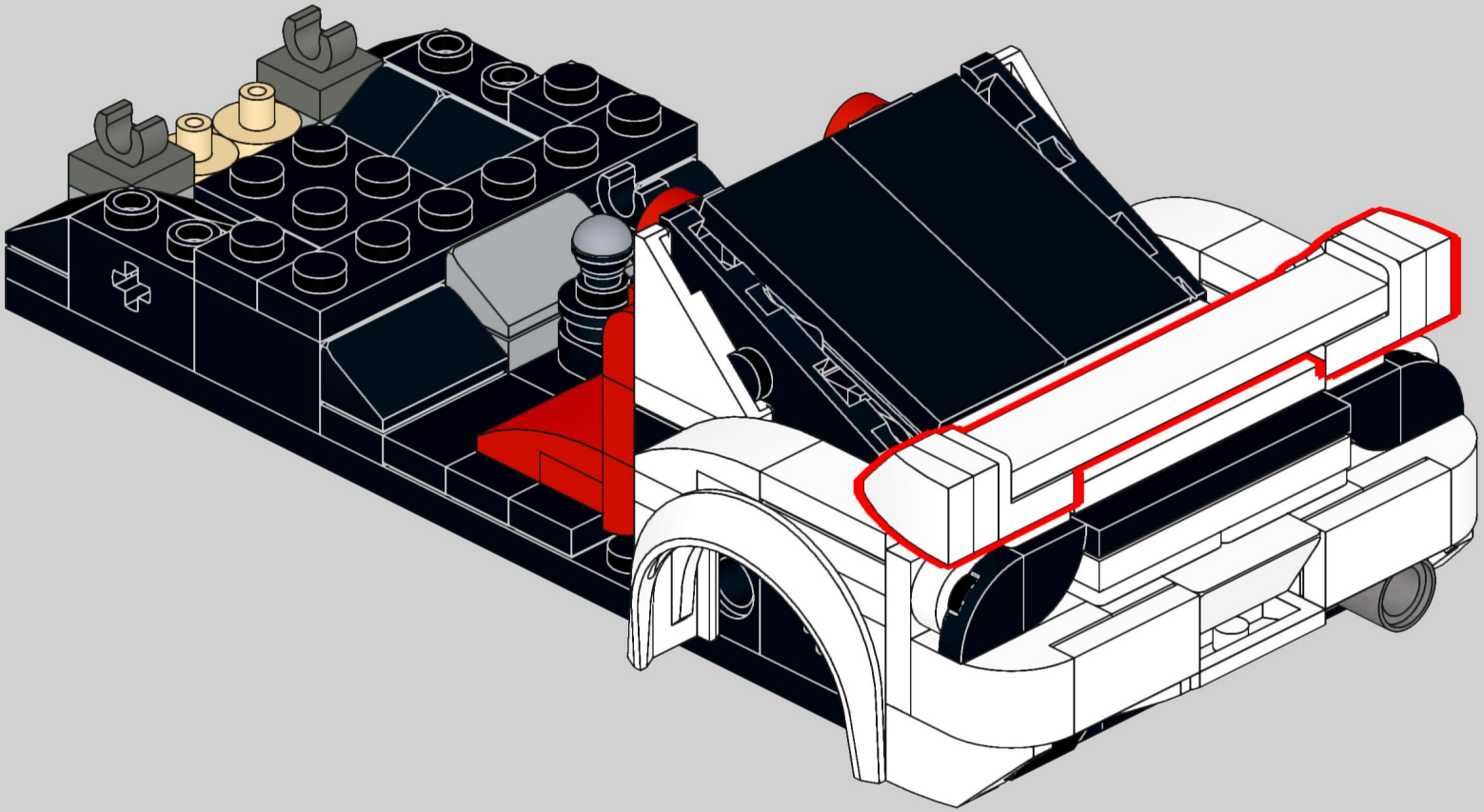

# 63

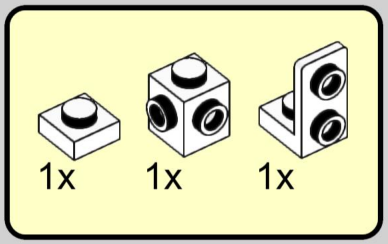


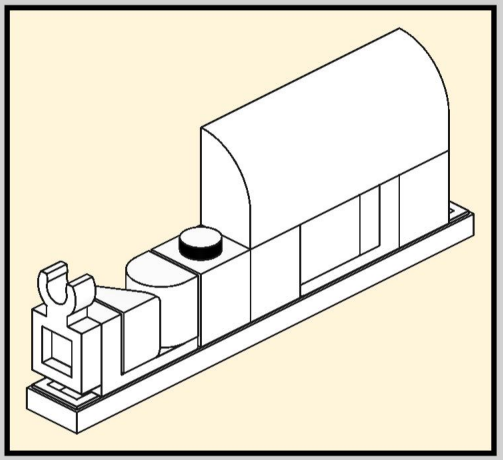

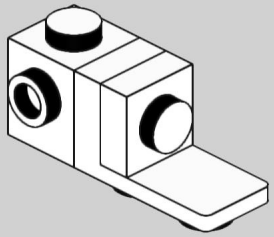

# 64

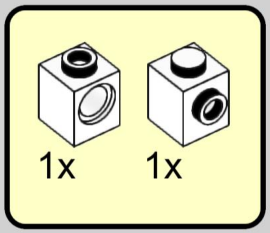


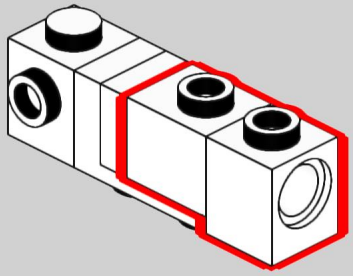

# 65

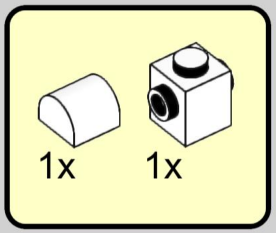


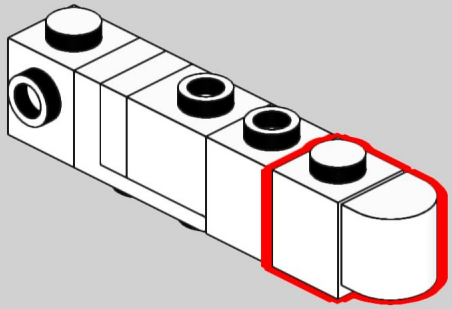

# 66

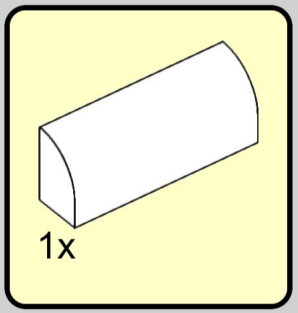


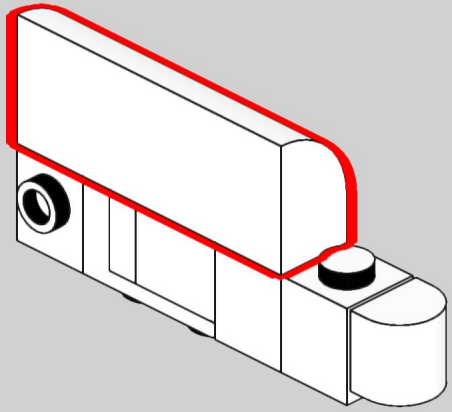

# 67

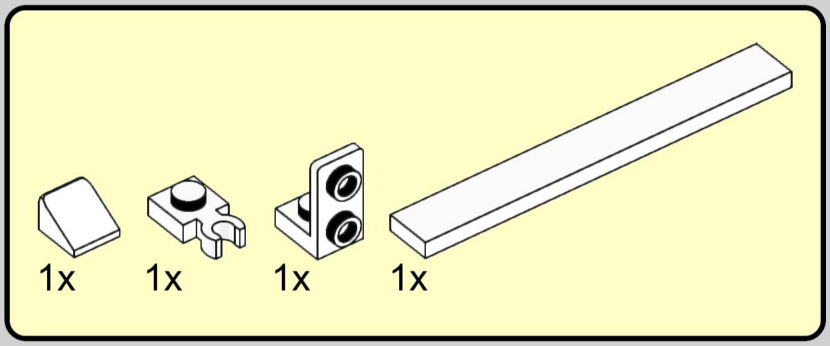


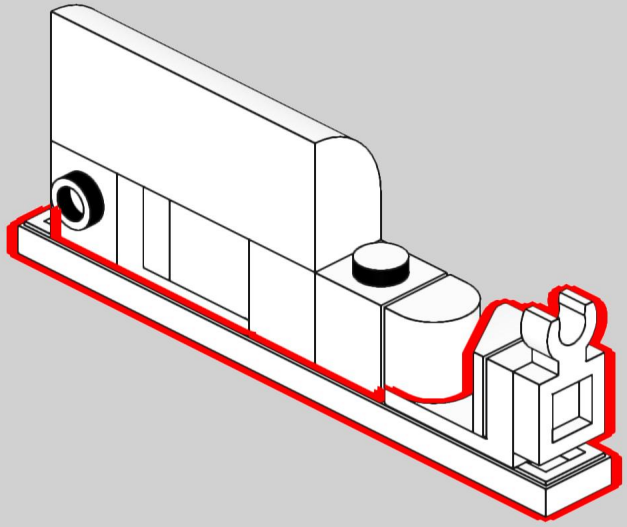

68

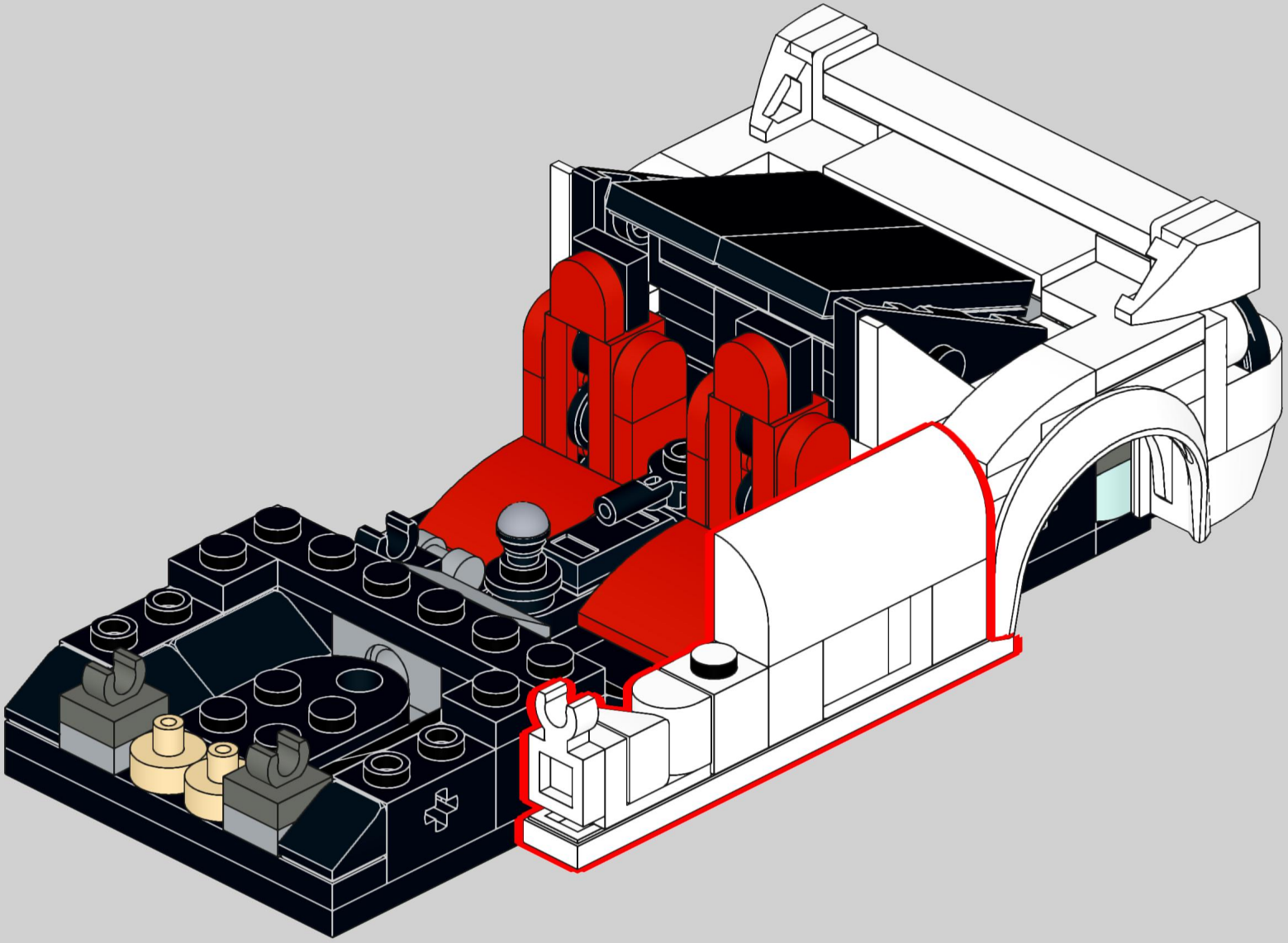

# 69

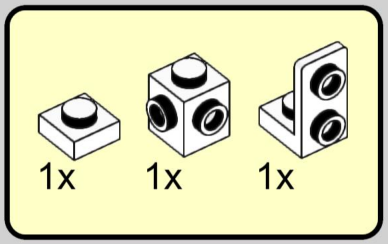


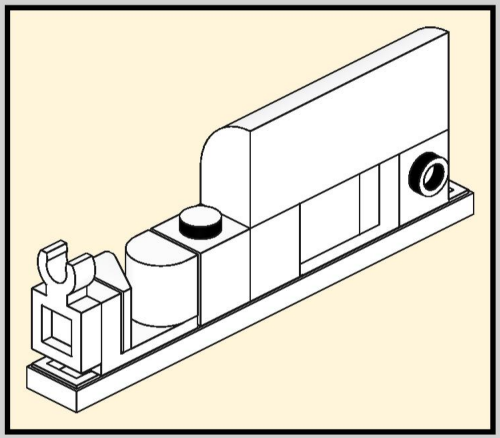

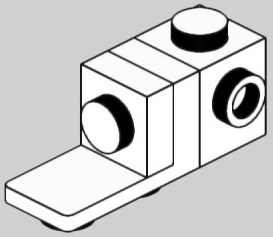

# 70

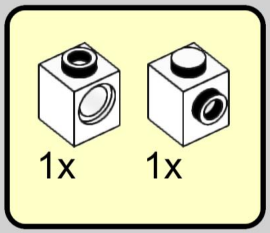


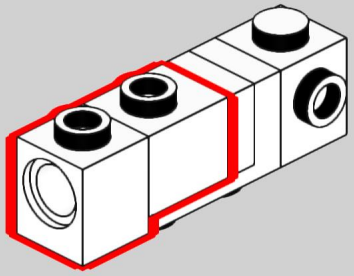

# 71

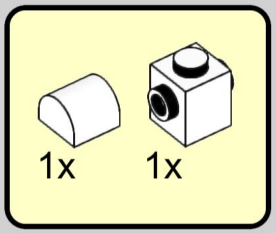


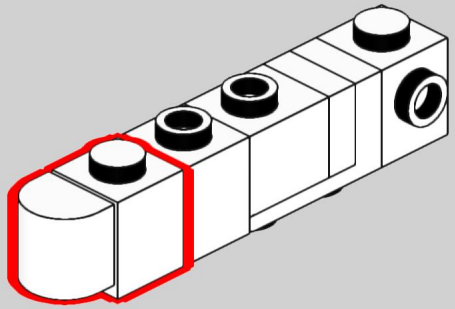

# 72

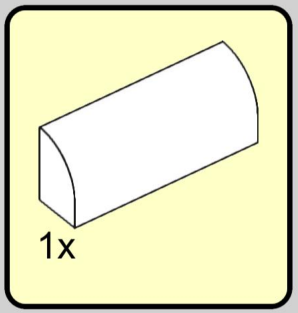


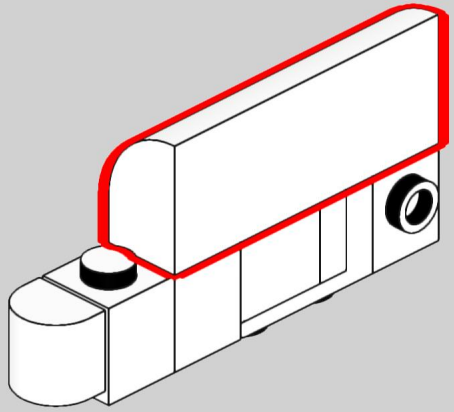

# 73

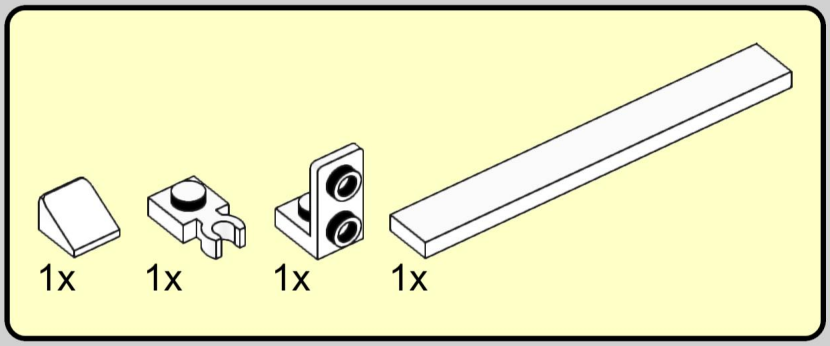


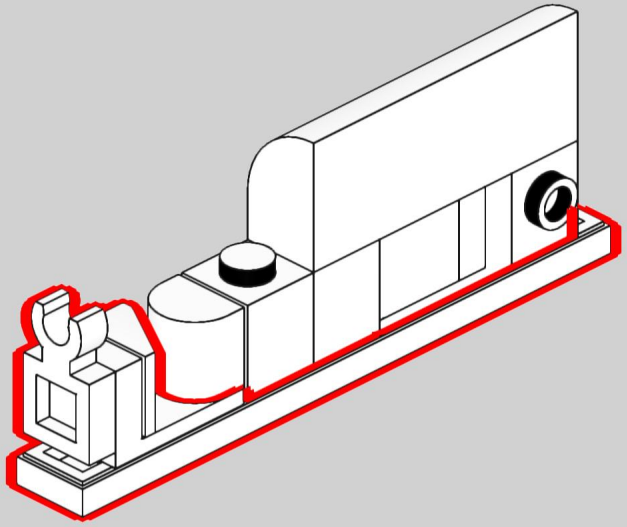

74

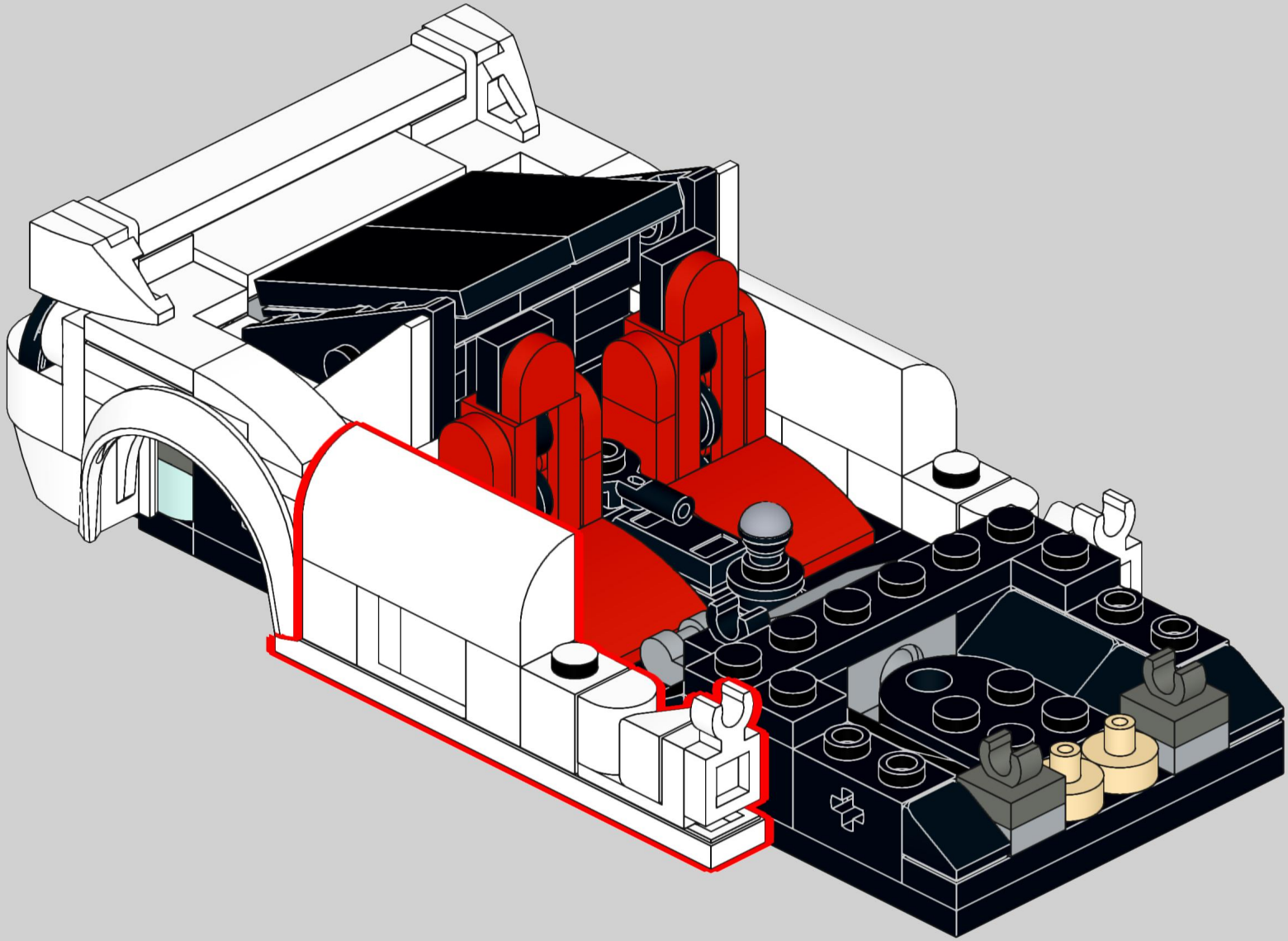

# 75

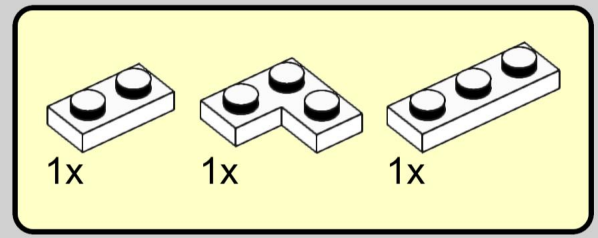

# 76

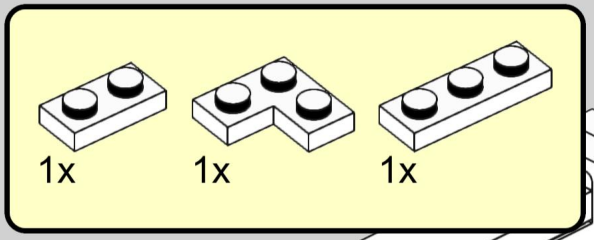

# 77

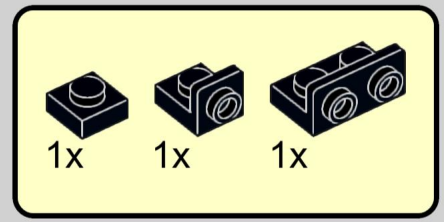

# 78

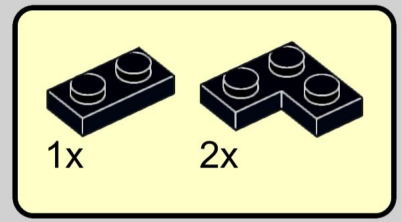

# 79

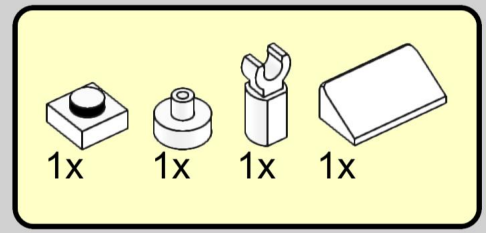

# 80

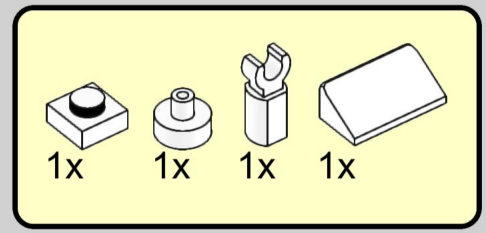

# 81

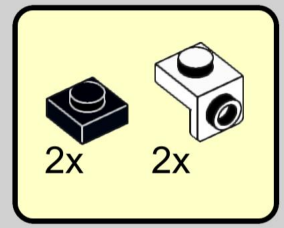


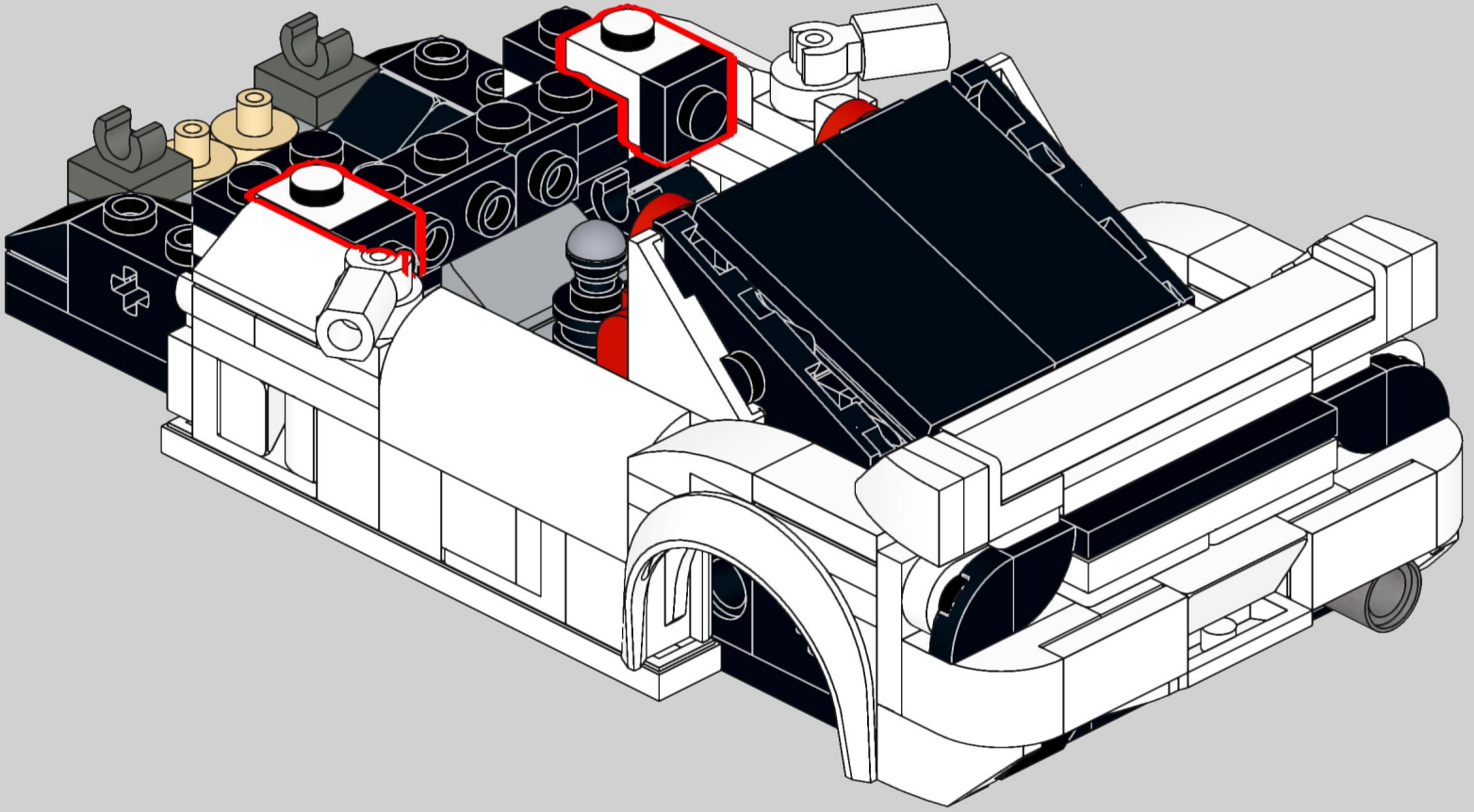

# 82

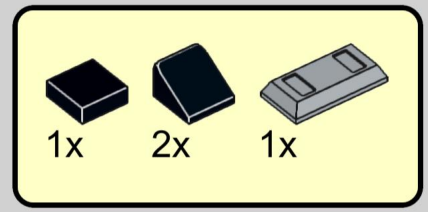


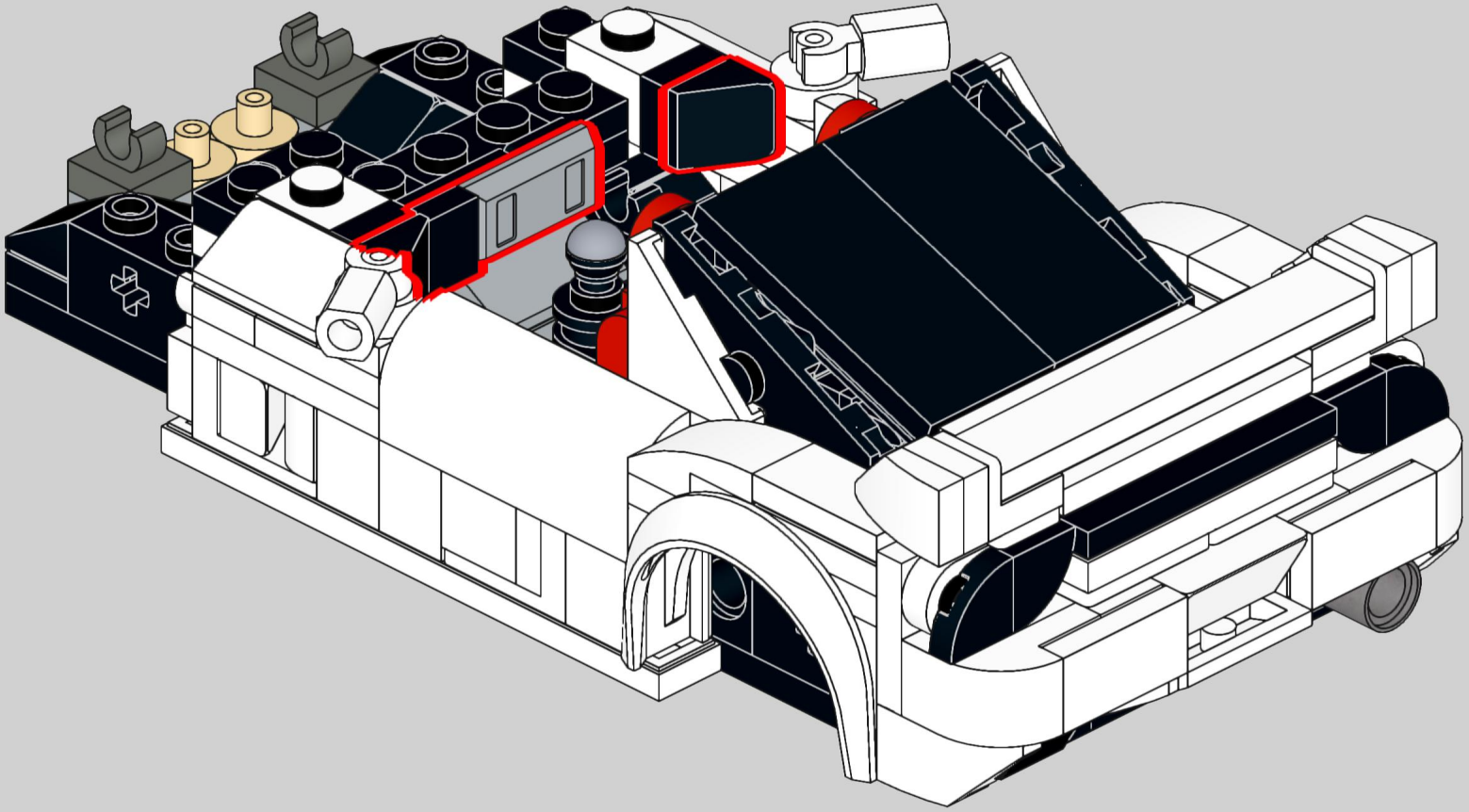

# 83

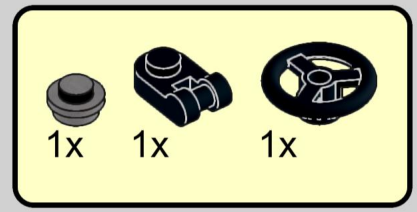


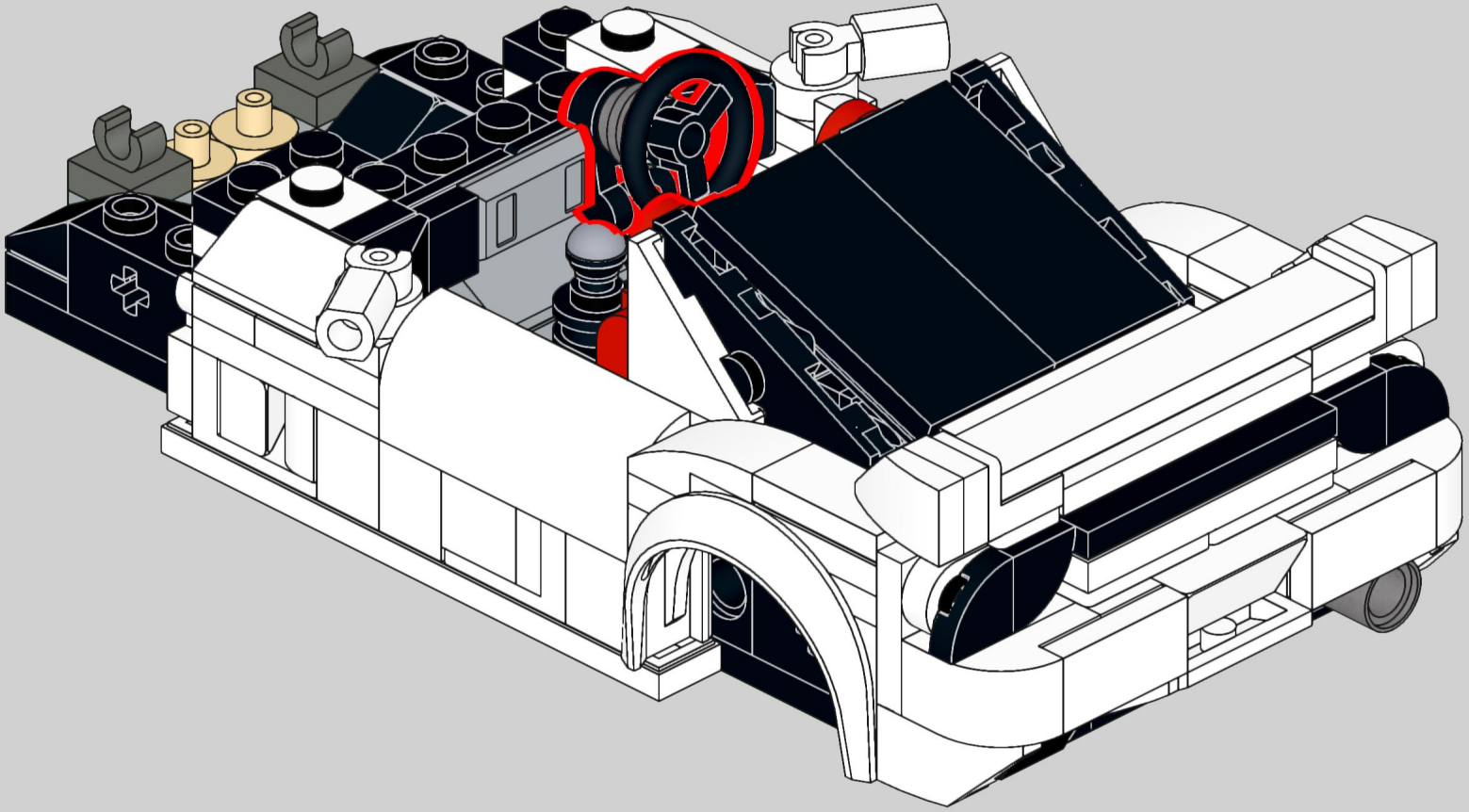

# 84

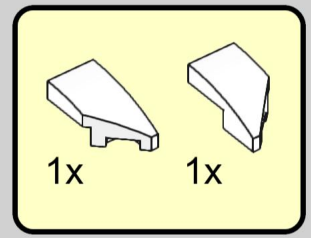

# 85

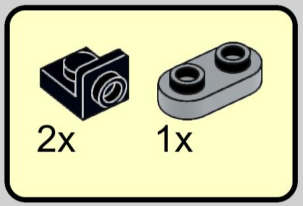


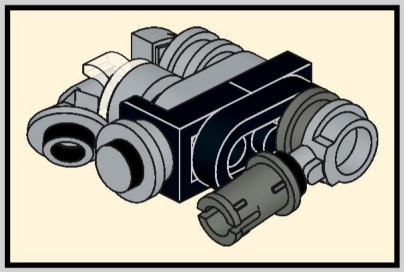

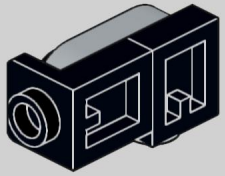

# 86

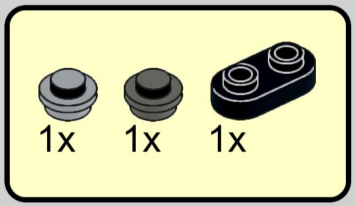


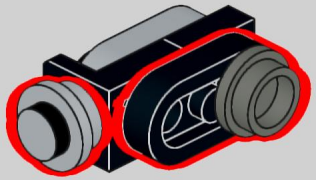

# 87

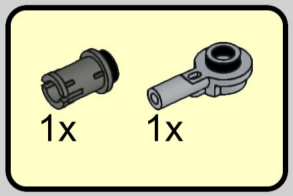


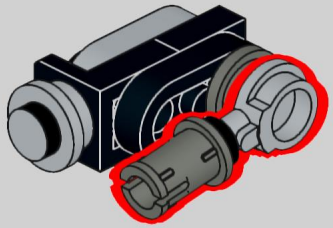

# 88

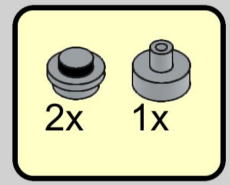


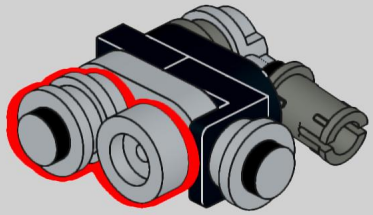

# 89

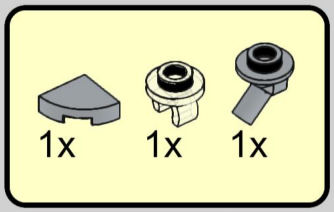


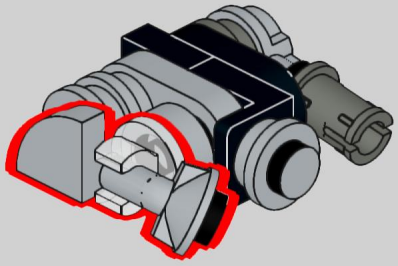

90

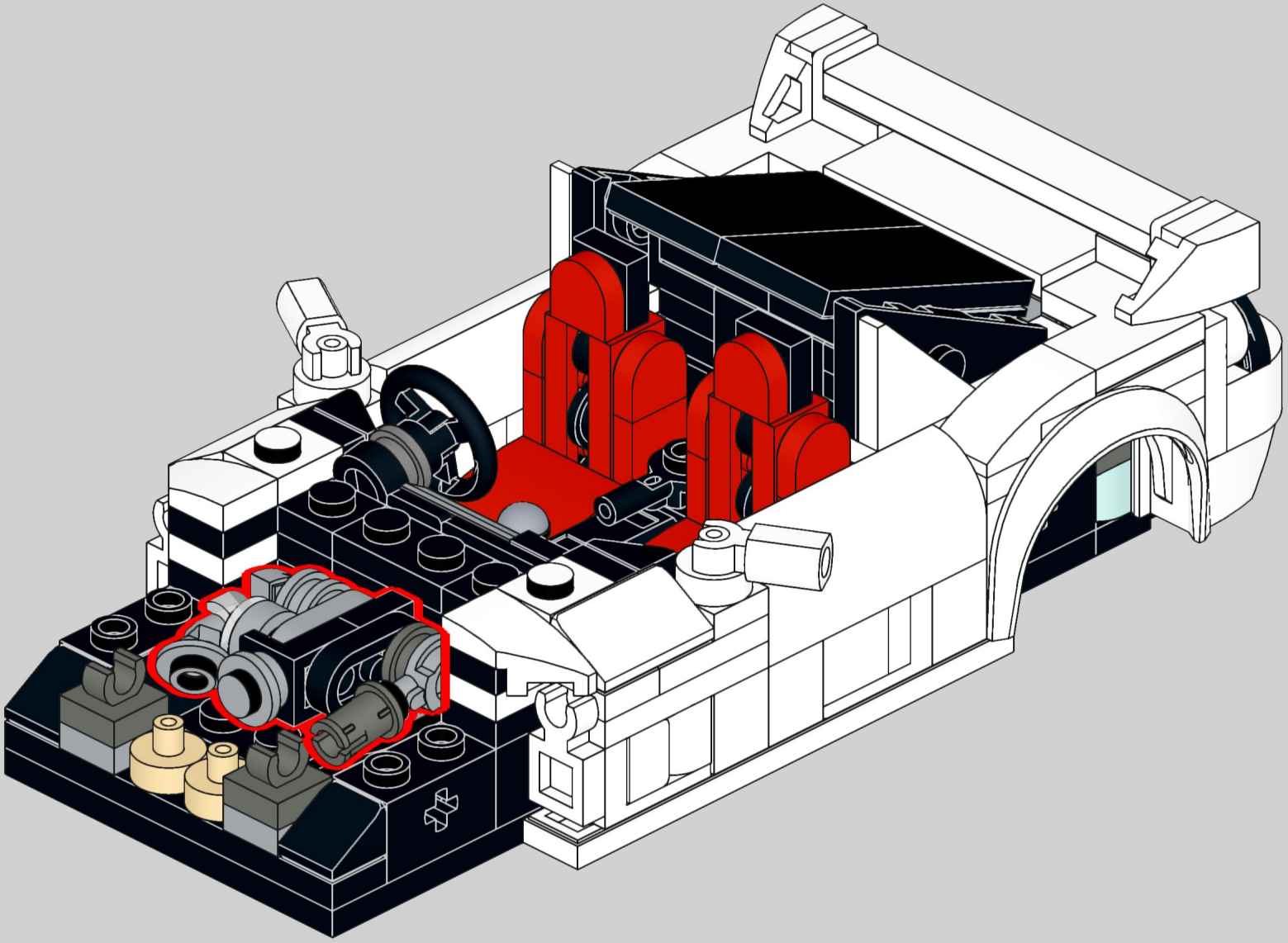

# 91

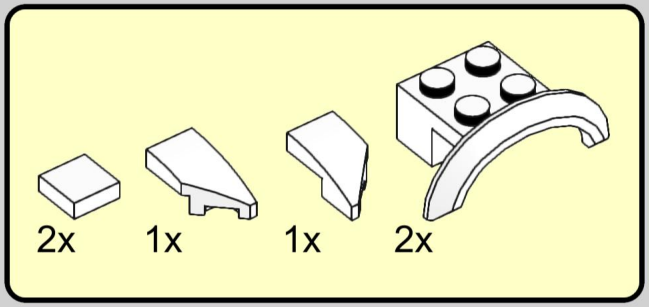

# 92

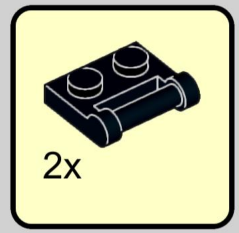

# 93

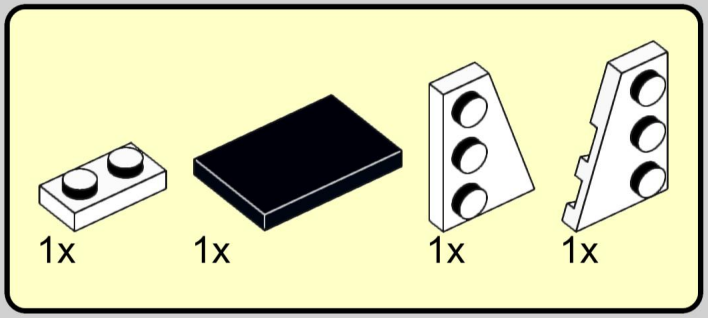


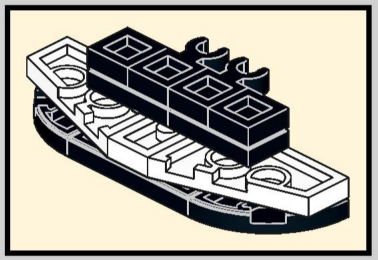

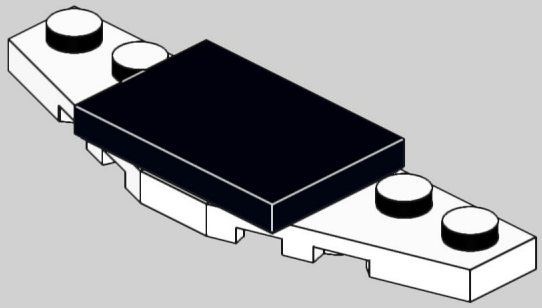

# 94

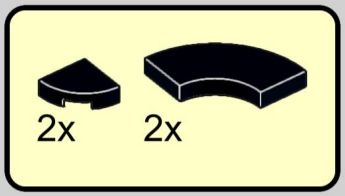


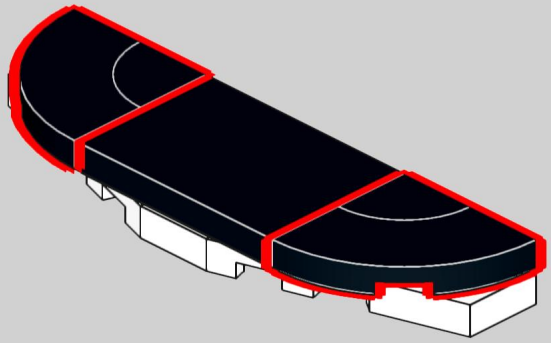

# 95

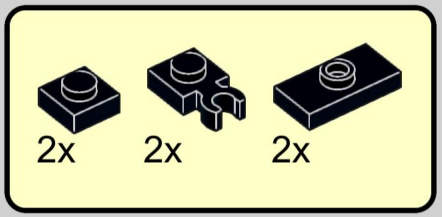


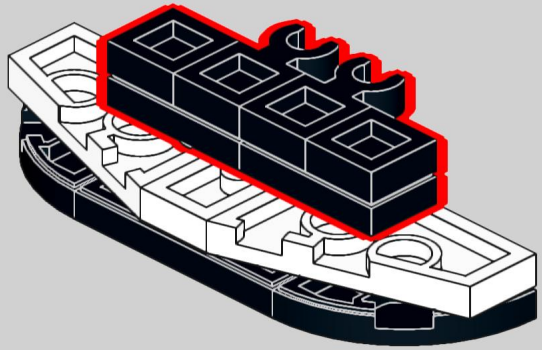

96

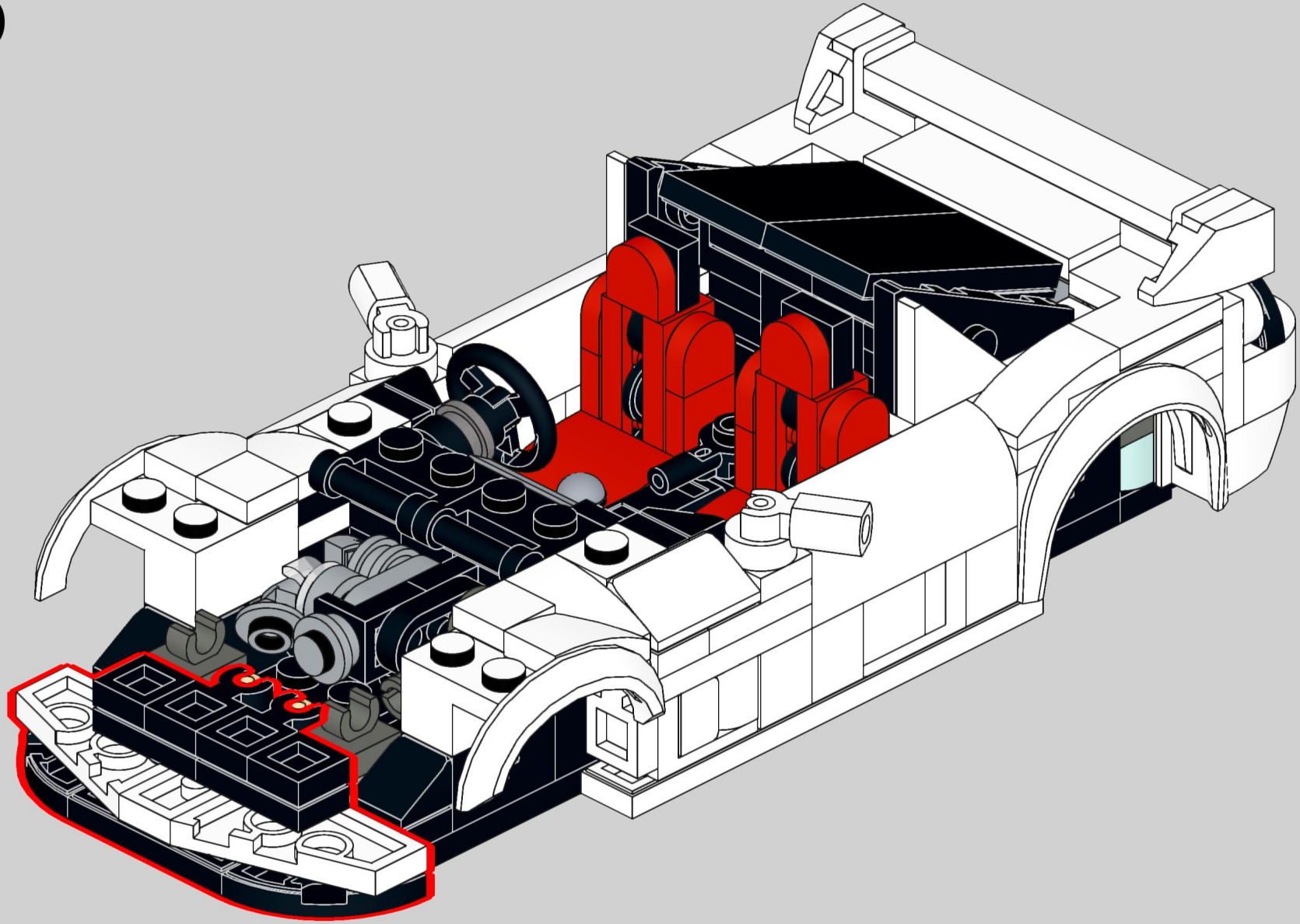

# 97

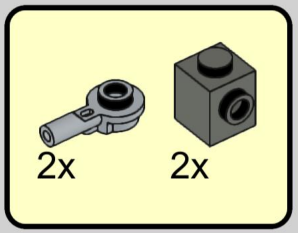


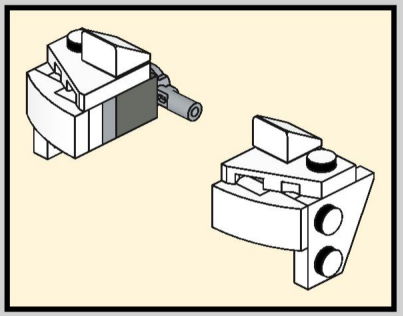

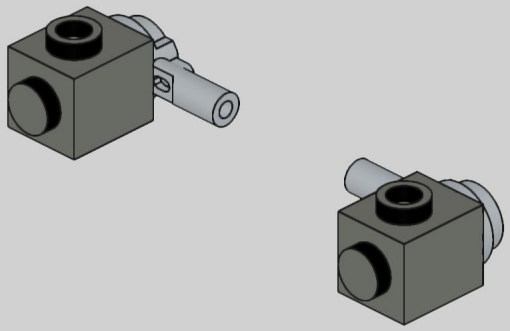

# 98

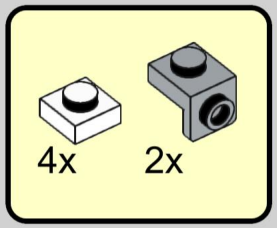


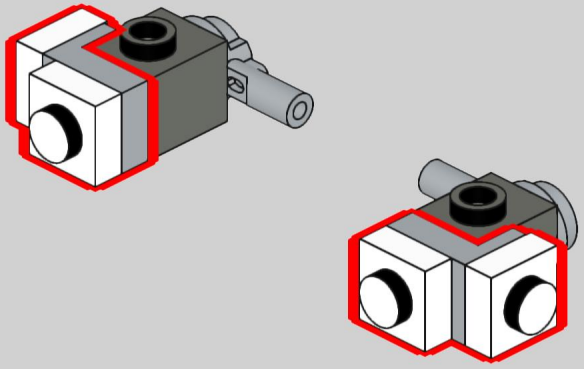

# 99

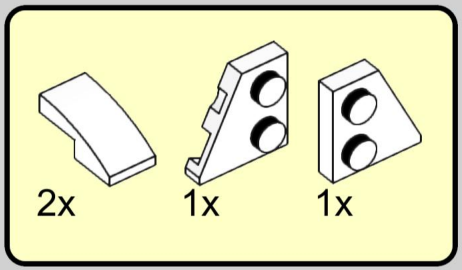


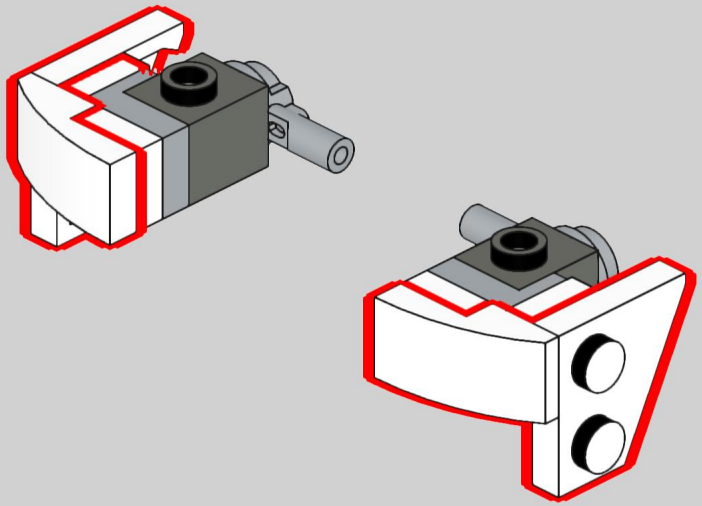

# 100

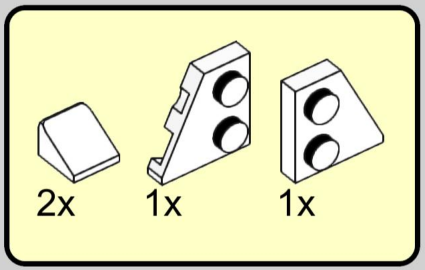


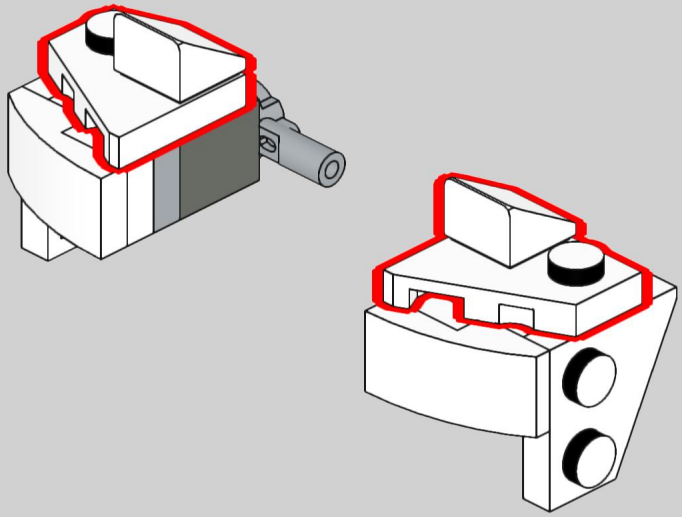

# 101

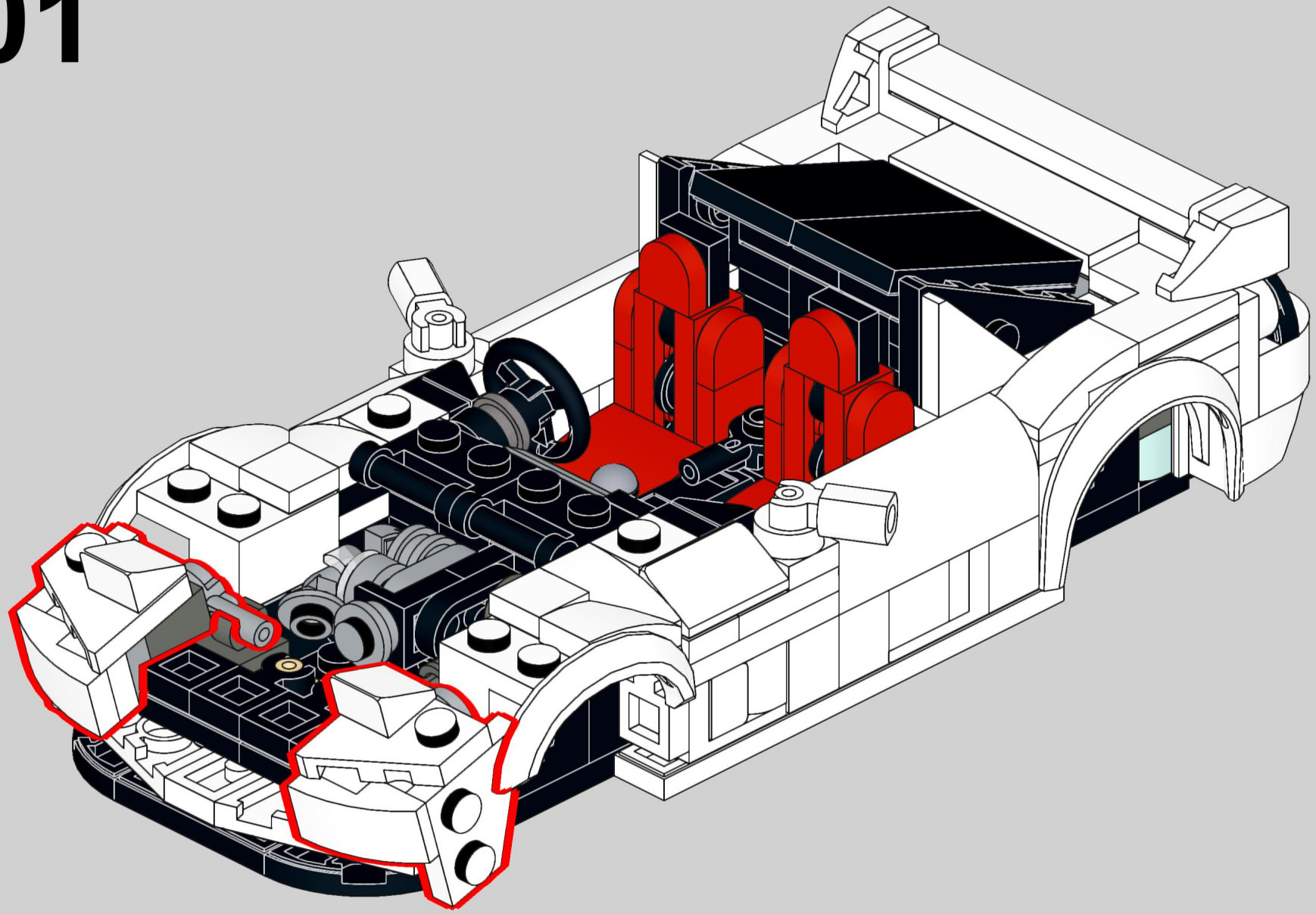

# 102

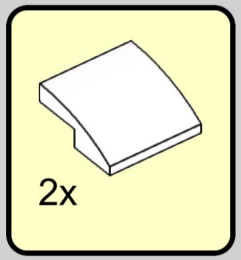

# 103

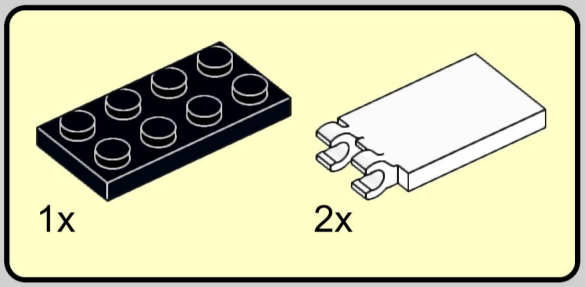


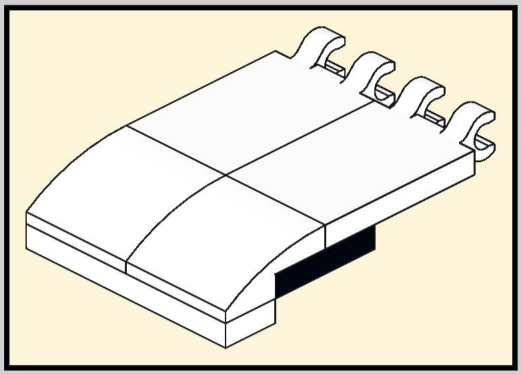

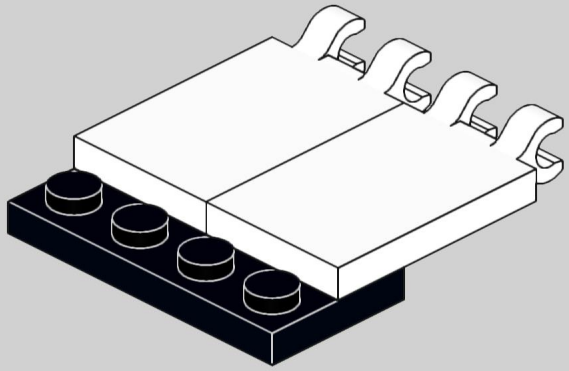

# 104

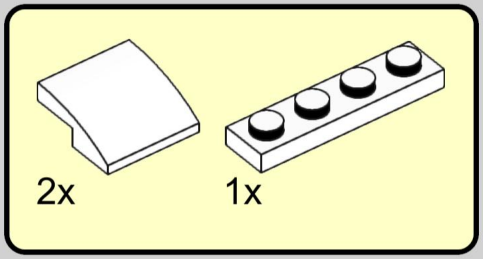


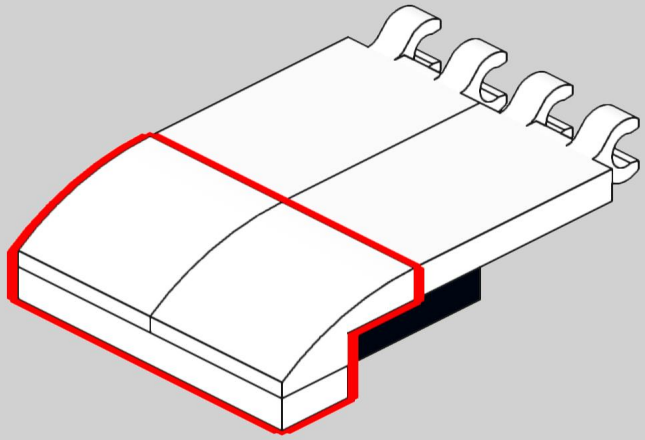

# 105

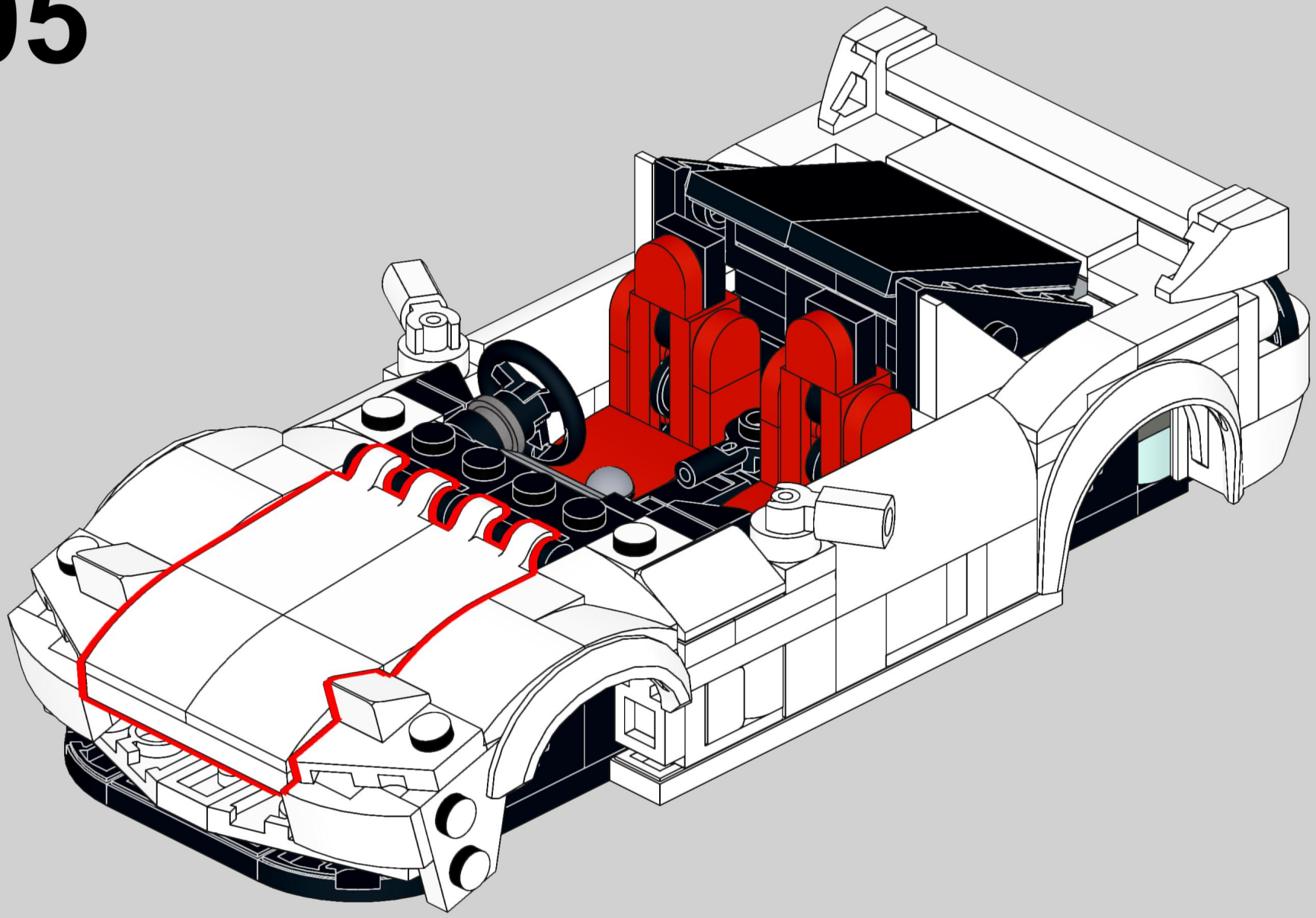

# 106

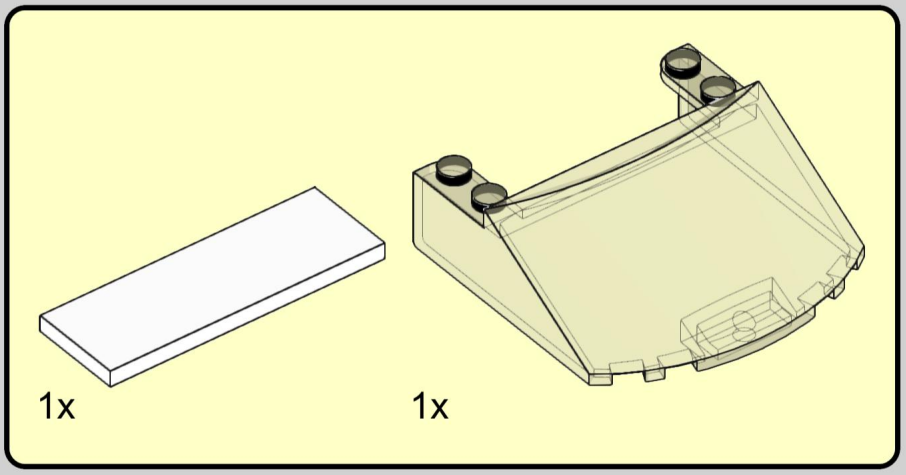


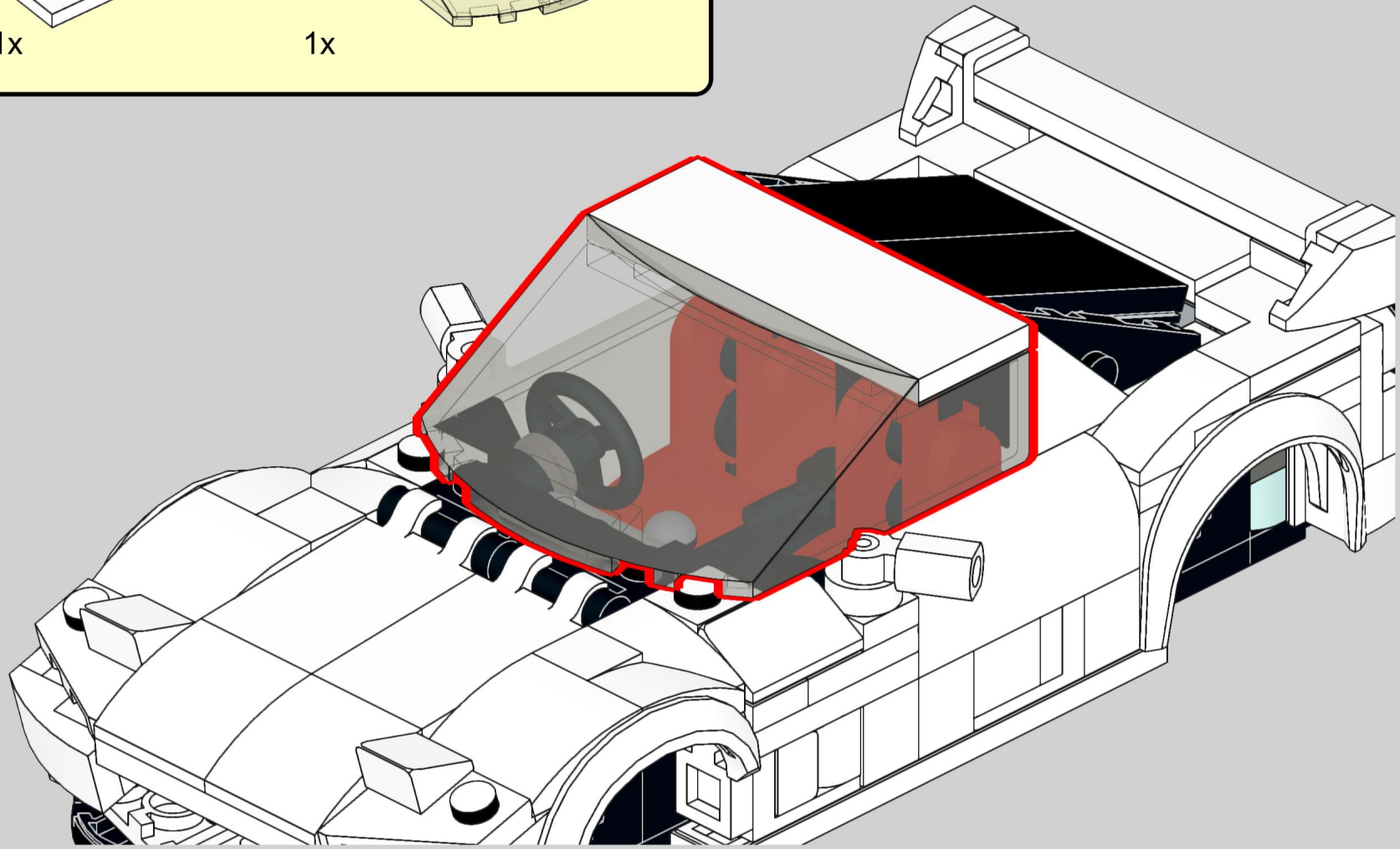

# 107

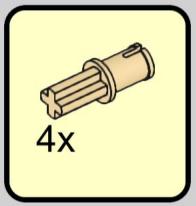

# 108

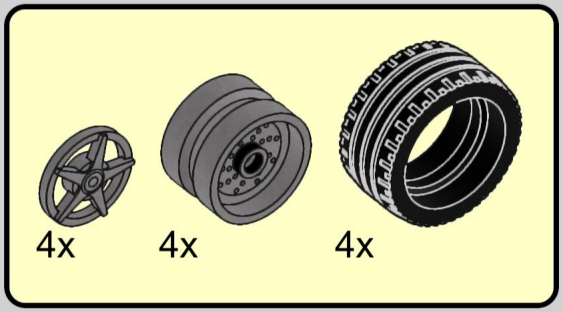

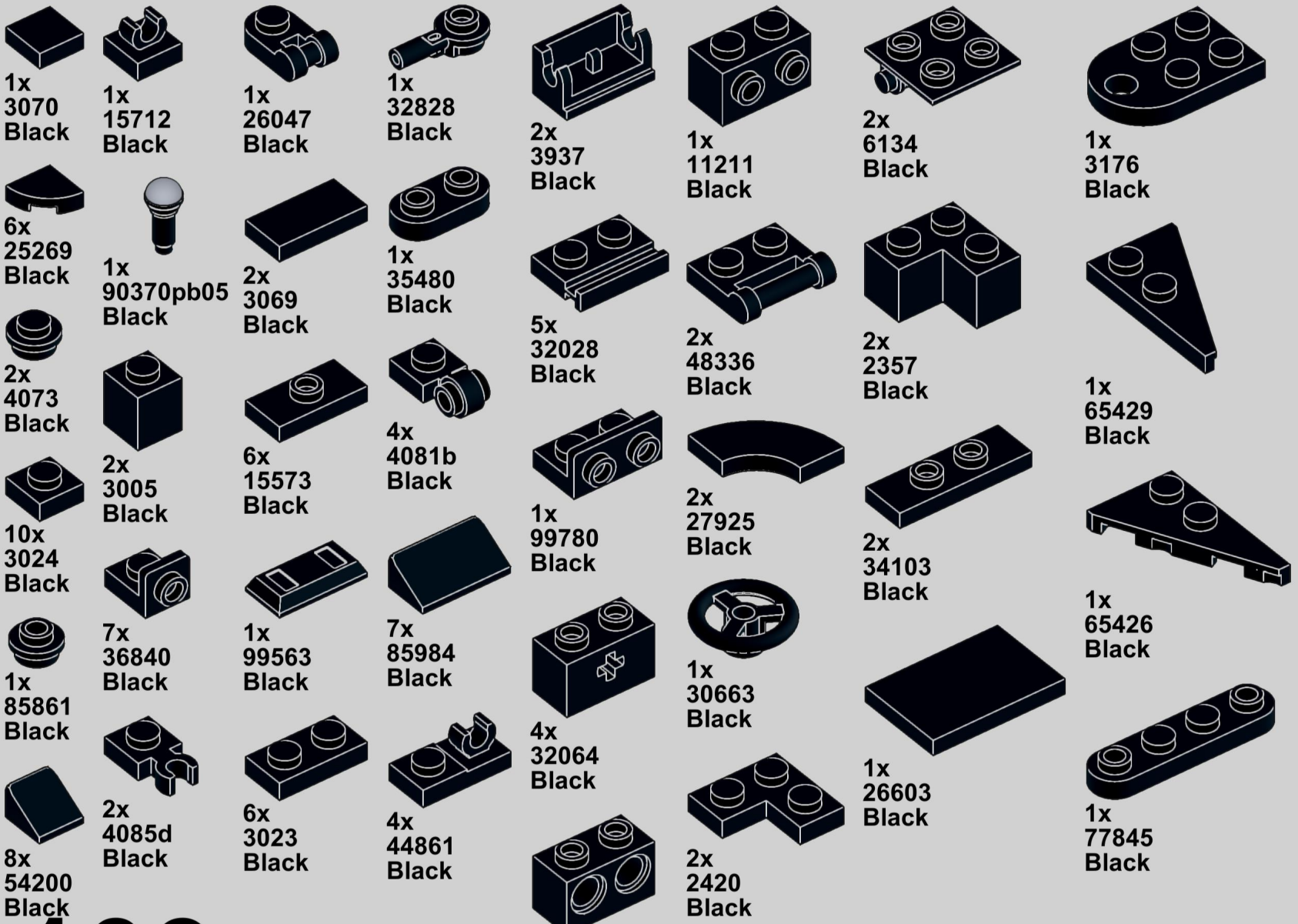
1x
3070
Black
1x
15712
Black
1x
26047
Black
1x
32828
Black
2x
3937
Black
1x
11211
Black
2x
6134
Black
1x
3176
Black
6x
25269
Black
1x
90370pb05
Black
2x
3069
Black
1x
35480
Black
5x
32028
Black
2x
48336
Black
2x
2357
Black
1x
65429
Black
2x
4073
Black
2x
3005
Black
6x
15573
Black
4x
4081b
Black
1x
99780
Black
2x
27925
Black
2x
34103
Black
1x
65426
Black
10x
3024
Black
7x
36840
Black
1x
99563
Black
7x
85984
Black
1x
30663
Black
1x
26603
Black
1x
85861
Black
2x
4085d
Black
6x
3023
Black
4x
44861
Black
4x
32064
Black
2x
2420
Black
1x
77845
Black
8x
54200
Black
2x
32000
Black

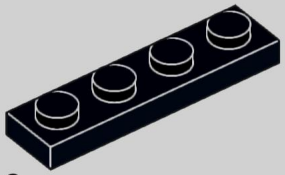

2x
3710
Black

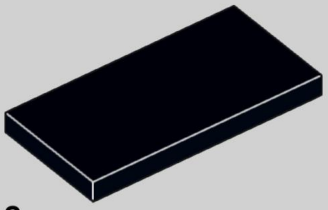

2x
87079
Black

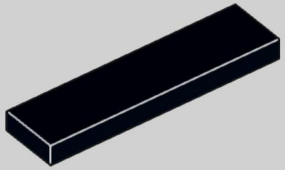

1x
2431
Black

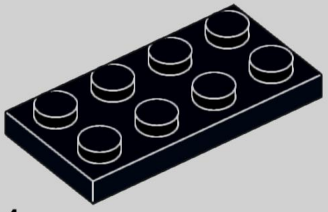

1x
3020
Black

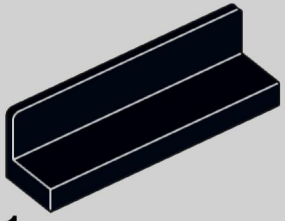

1x
30413
Black

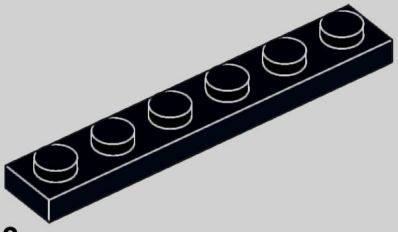

3x
3666
Black

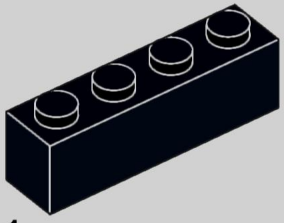

1x
3010
Black

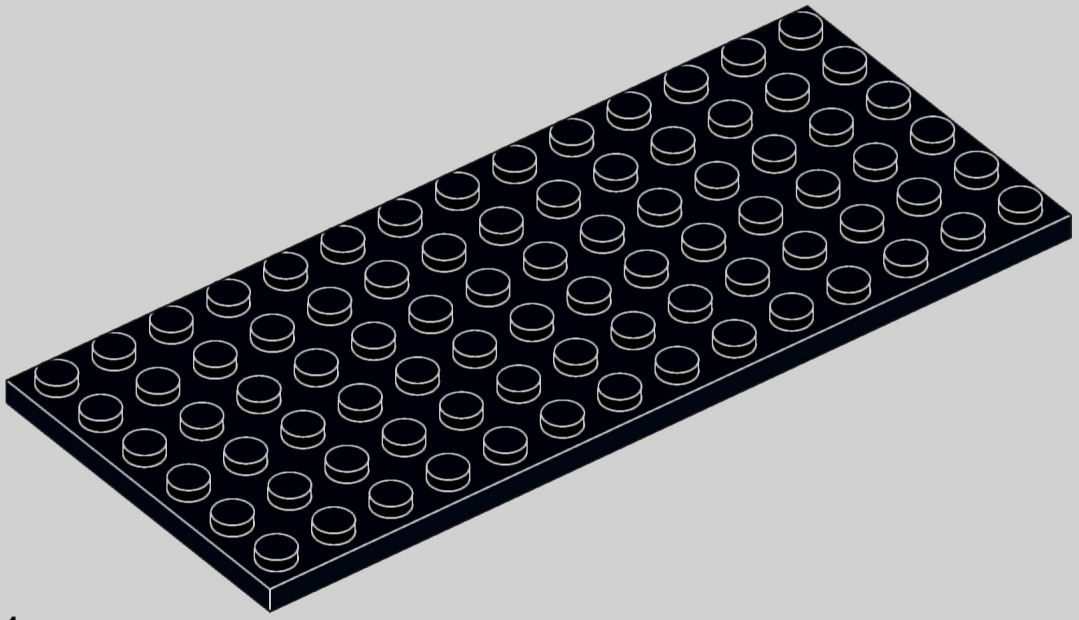

1x
3456
Black

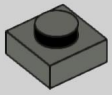

2x
3024
Dark Bluish Gray



1x
4073
Dark Bluish Gray



1x
89678
Dark Bluish Gray



2x
15712
Dark Bluish Gray



1x
20482
Light Bluish Gray

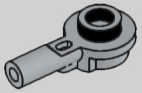

3x
32828
Light Bluish Gray

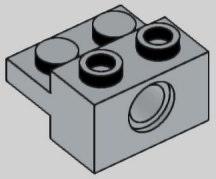

3x
73109
Light Bluish Gray

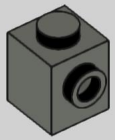

2x
87087
Dark Bluish Gray



1x
65578
Light Bluish Gray



1x
35480
Light Bluish Gray

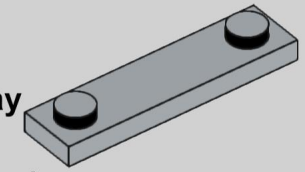

1x
41740
Light Bluish Gray

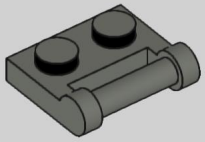

2x
48336
Dark Bluish Gray

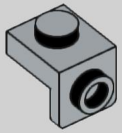

2x
36841
Light Bluish Gray

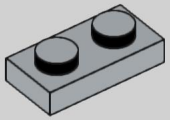

2x
3023
Light Bluish Gray

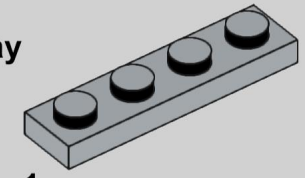

1x
3710
Light Bluish Gray



1x
25269
Light Bluish Gray

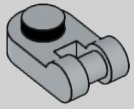

1x
26047
Light Bluish Gray

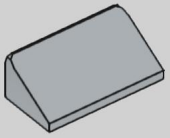

1x
85984
Light Bluish Gray



3x
4073
Light Bluish Gray

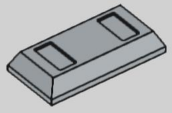

1x
99563
Light Bluish Gray

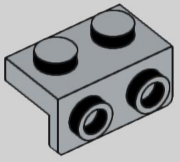

4x
99781
Light Bluish Gray

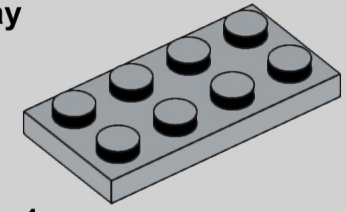

1x
3020
Light Bluish Gray

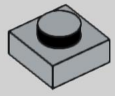

2x
3024
Light Bluish Gray

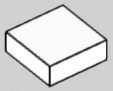

2x
3070
White



2x
11090
White

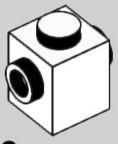

2x
47905
White



2x
35480
White



18x
3024
White



4x
36840
White



2x
26604
White

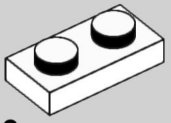

3x
3023
White



2x
49307
White

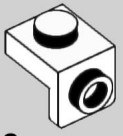

2x
36841
White

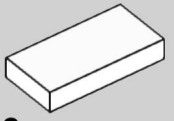

2x
3069
White

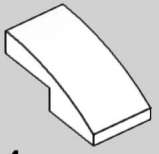

4x
11477
White



4x
54200
White

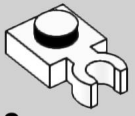

2x
4085d
White

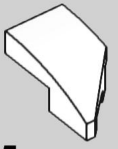

5x
29120
White



3x
85984
White



2x
20482
White



2x
87087
White

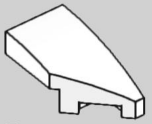

5x
29119
White

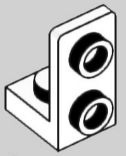

4x
73825
White



2x
6541
White

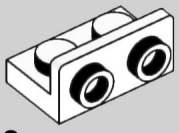

2x
99780
White

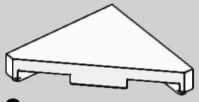

2x
35787
White

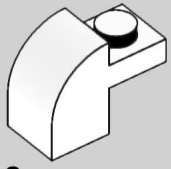

2x
6091
White

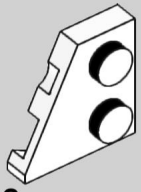

2x
24299
White

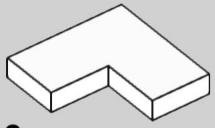

2x
14719
White

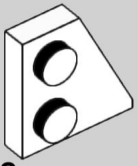

2x
24307
White

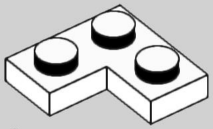

4x
2420
White

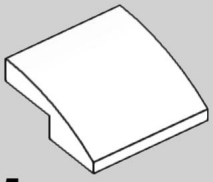

5x
15068
White

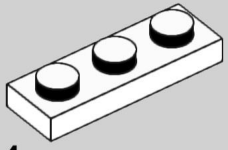

4x
3623
White

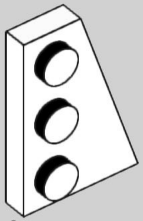

1x
43722
White

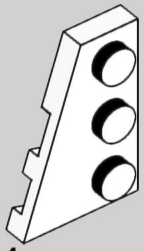

1x
43723
White

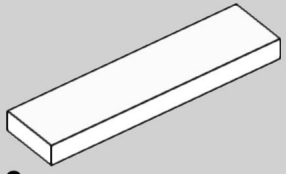

2x
2431
White

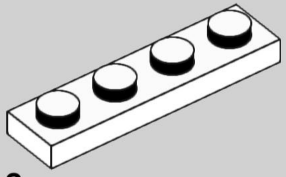

2x
3710
White

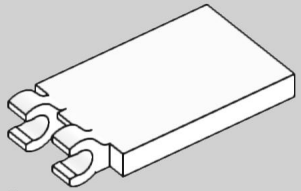

2x
30350b
White

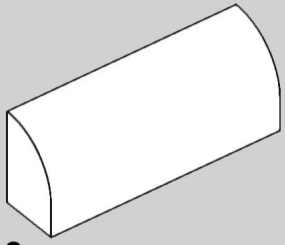

2x
6191
White

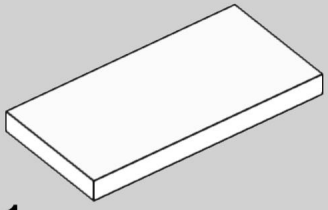

1x
87079
White

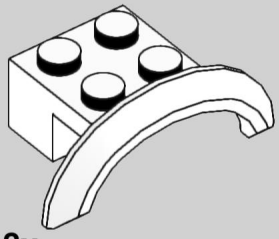

2x
98282
White

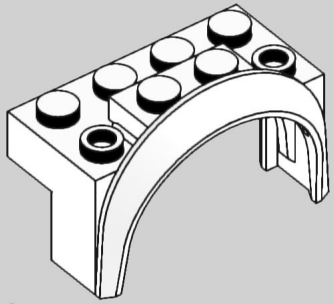

2x
3387
White

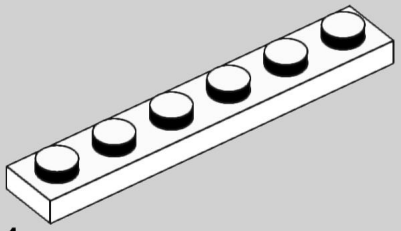

1x
3666
White

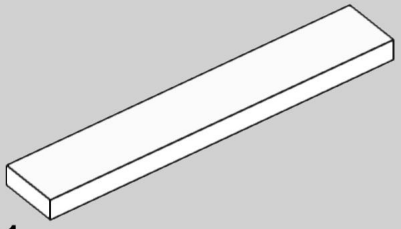

1x
6636
White

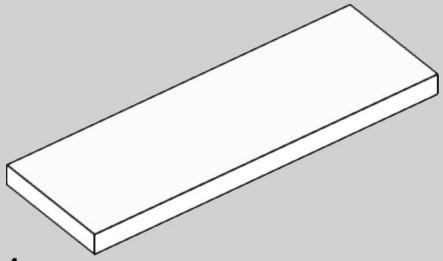

1x
69729
White

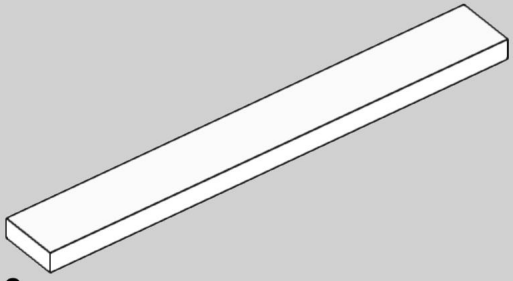

2x
4162
White

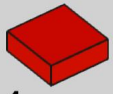

4x
3070
Red



6x
24246
Red



4x
25269
Red

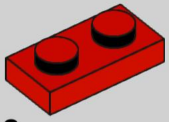

2x
3023
Red

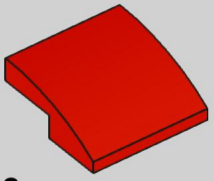

2x
15068
Red

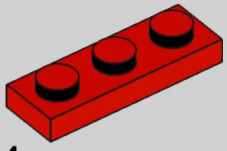

4x
3623
Red

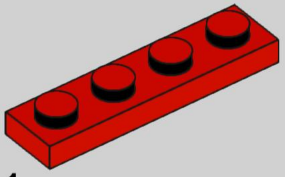

1x
3710
Red

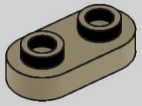

2x
35480
Dark Tan



2x
20482
Tan

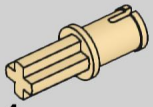

4x
3749
Tan

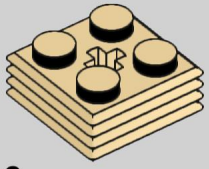

2x
71752
Tan



4x
3386
Light Aqua

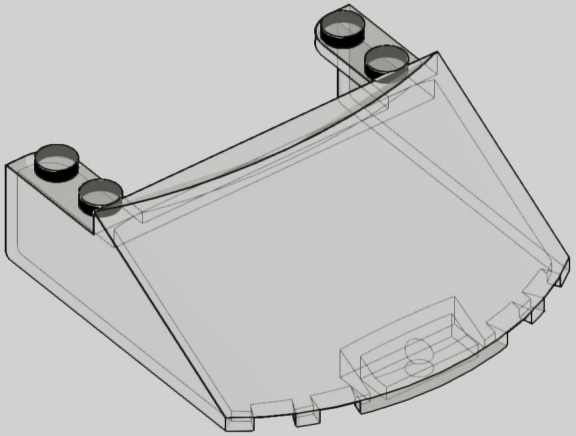

1x
65632
Trans-Brown



1x
5264
Trans-Clear



1x
4073
Flat Silver



1x
18654
Flat Silver



4x
18978a
Flat Silver

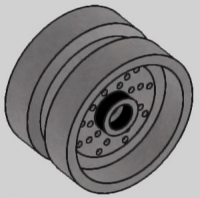

4x
66727
Flat Silver



4x
18977
Rubber Black