1

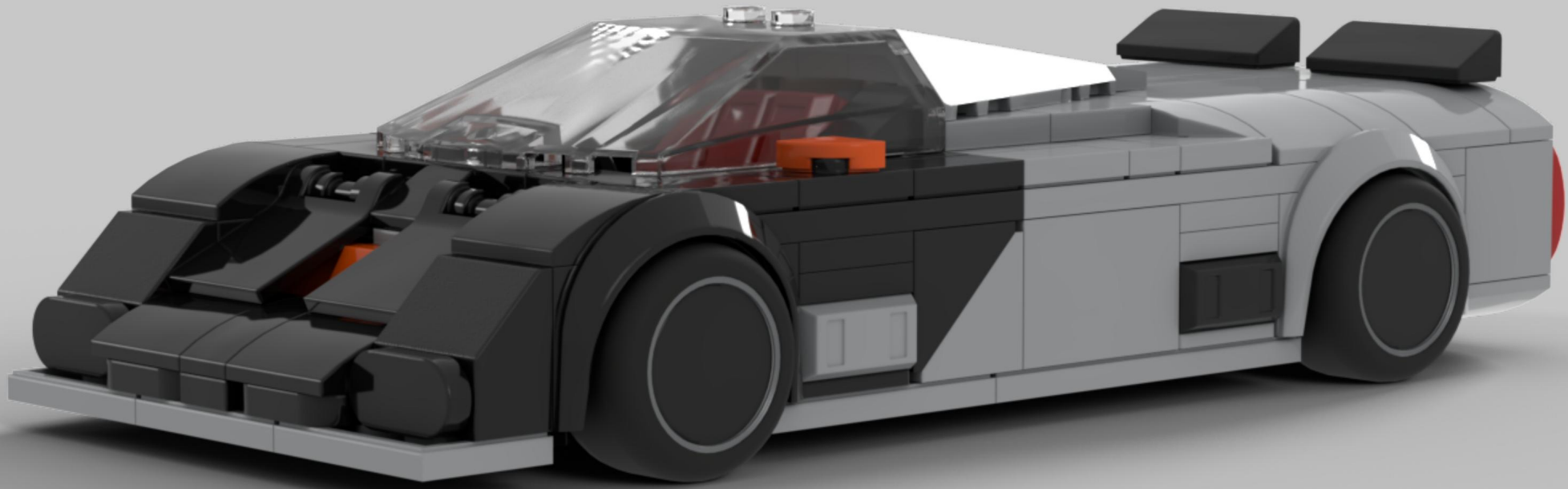

2

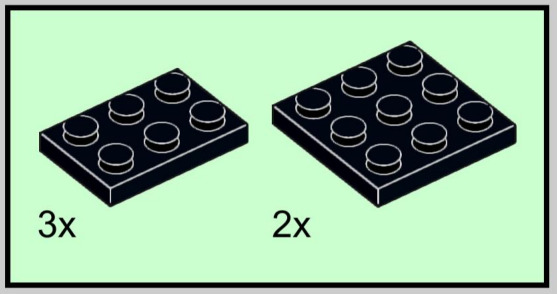

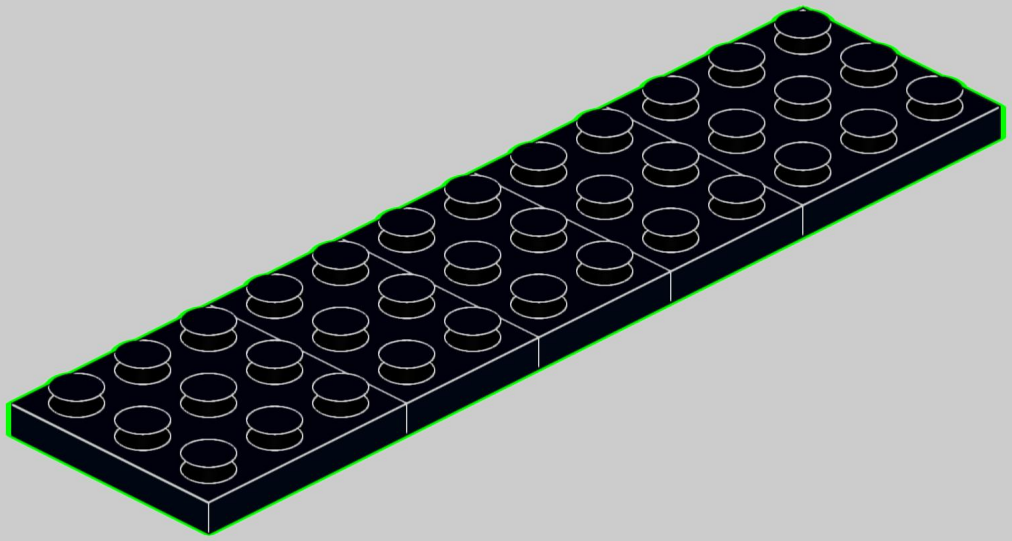

3

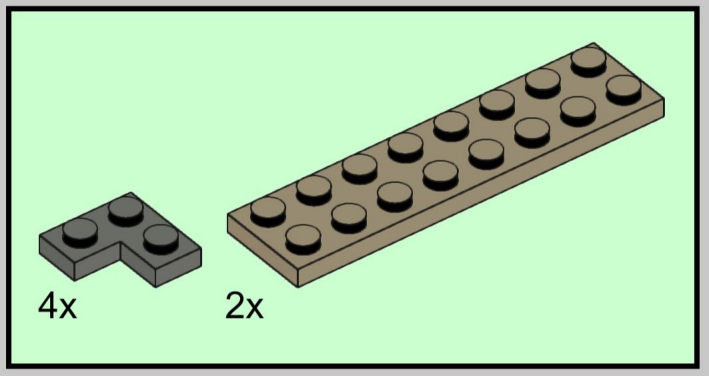

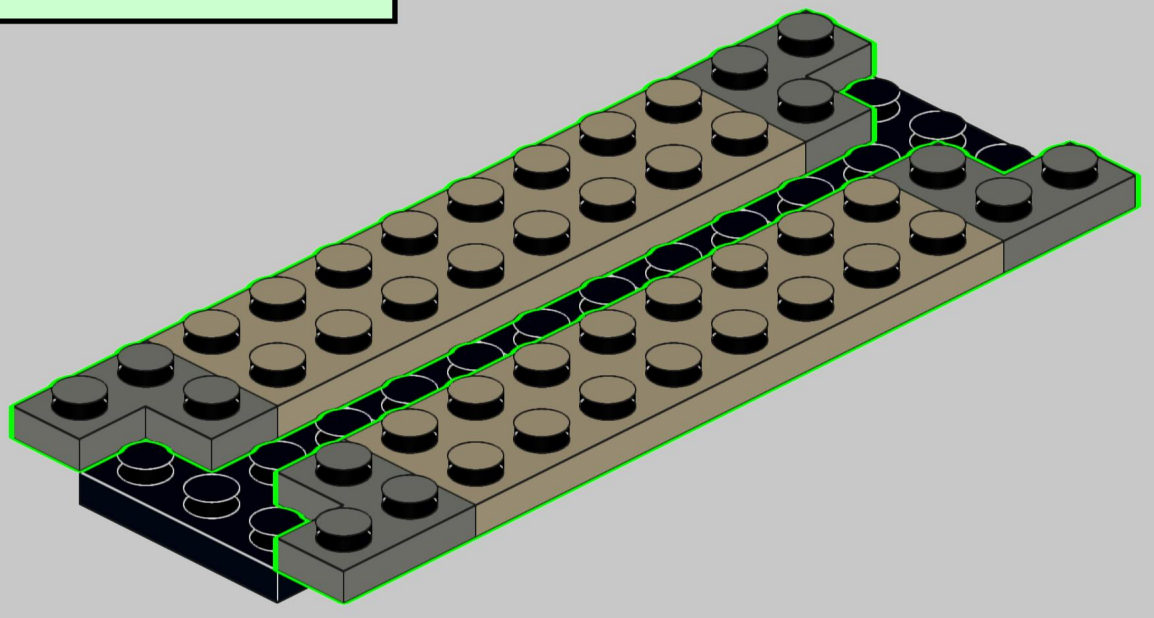

4

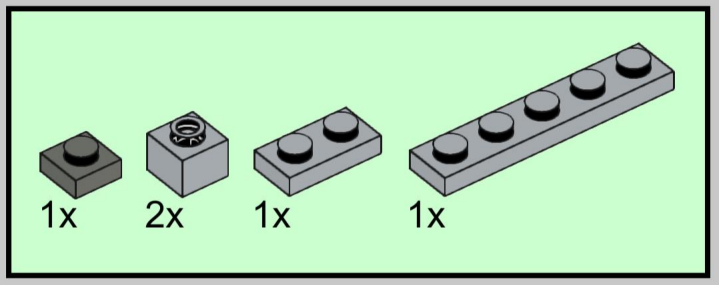

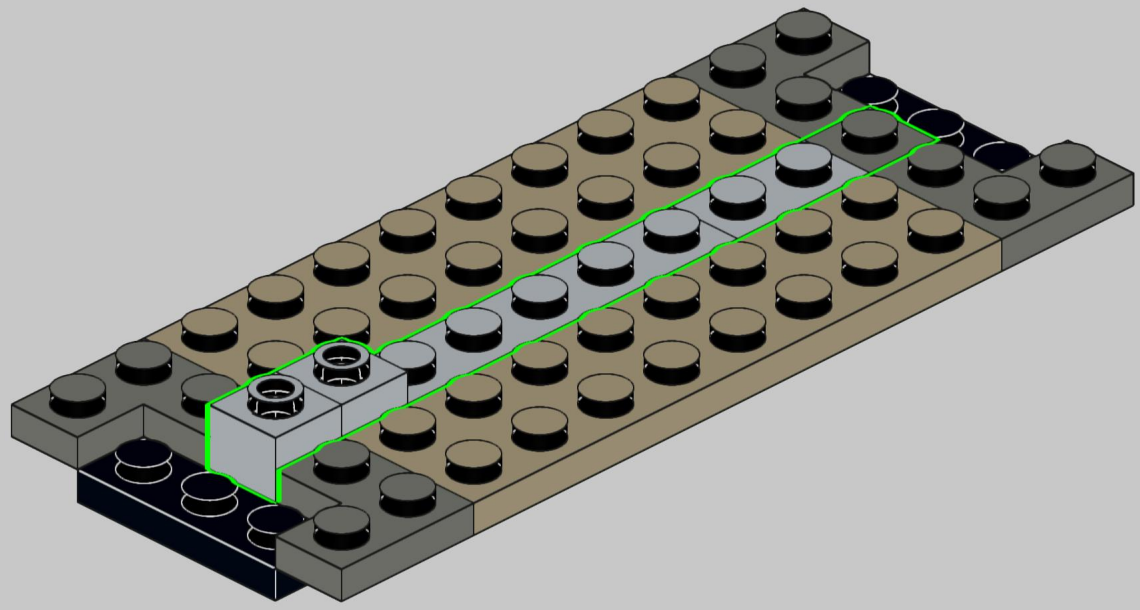

5

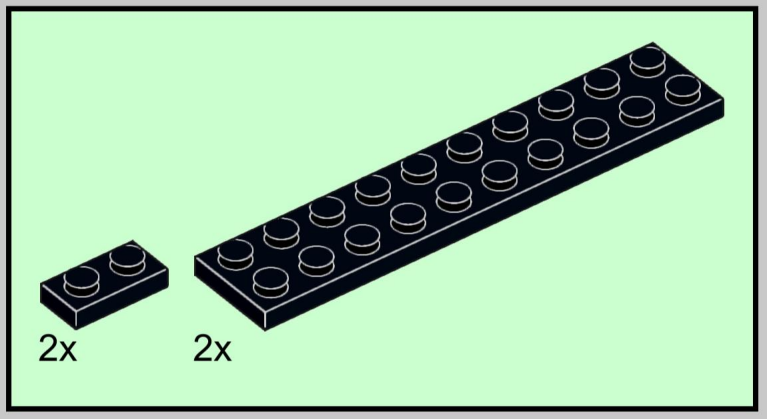

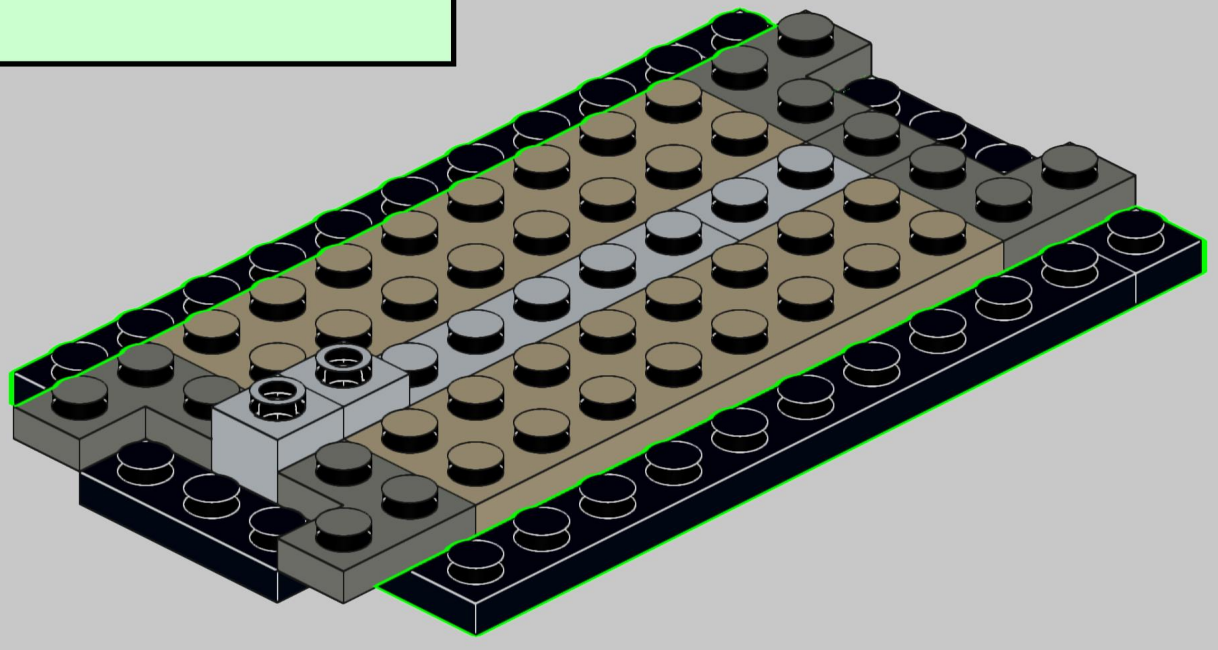

6

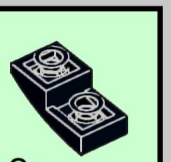

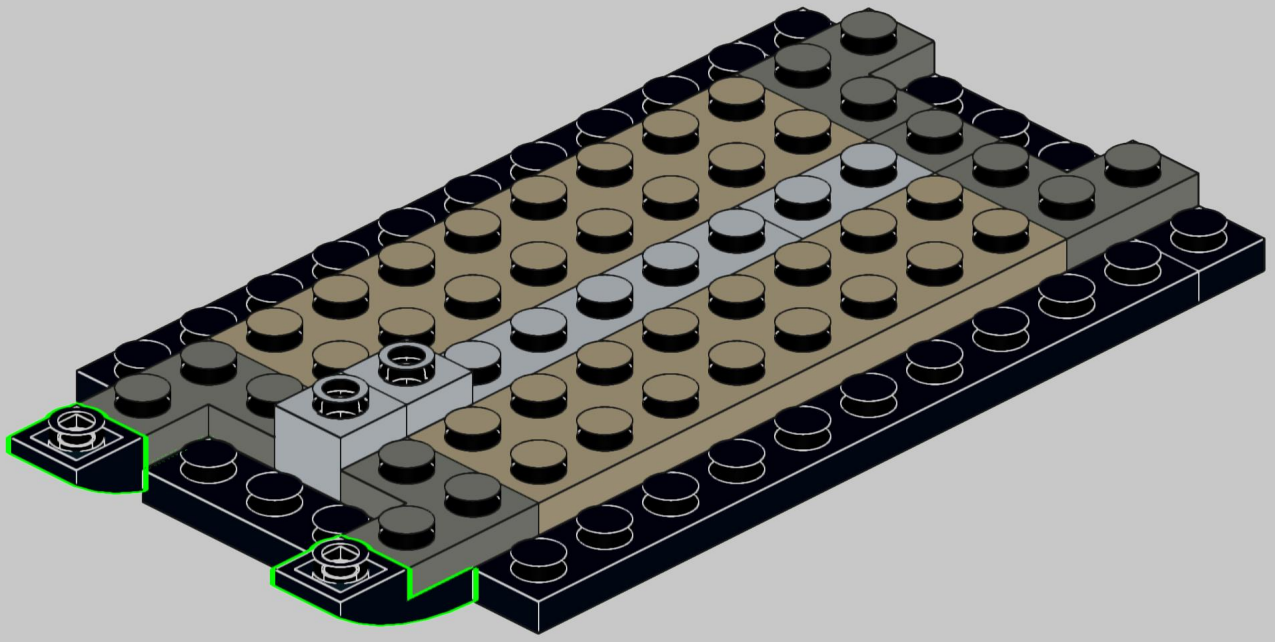

7

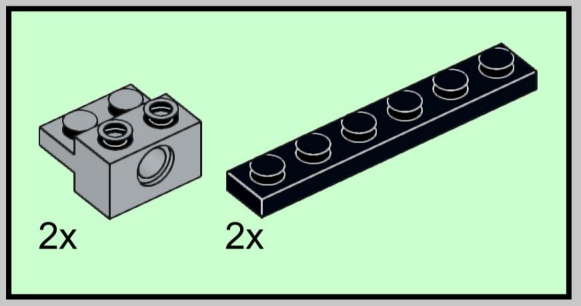

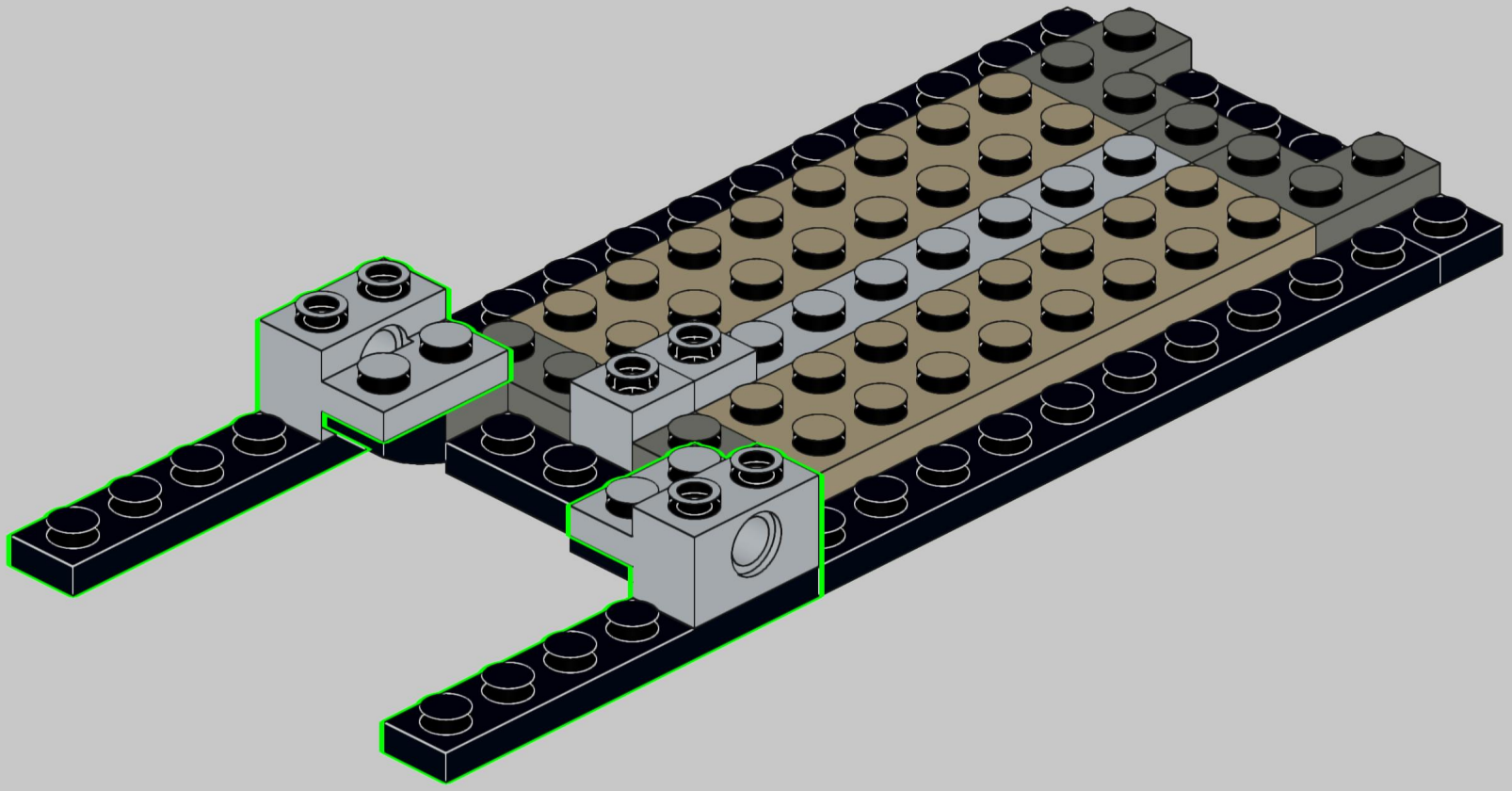

8

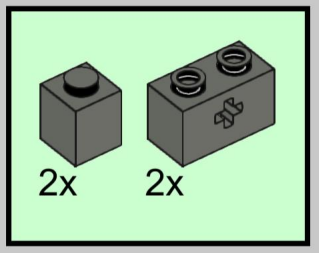

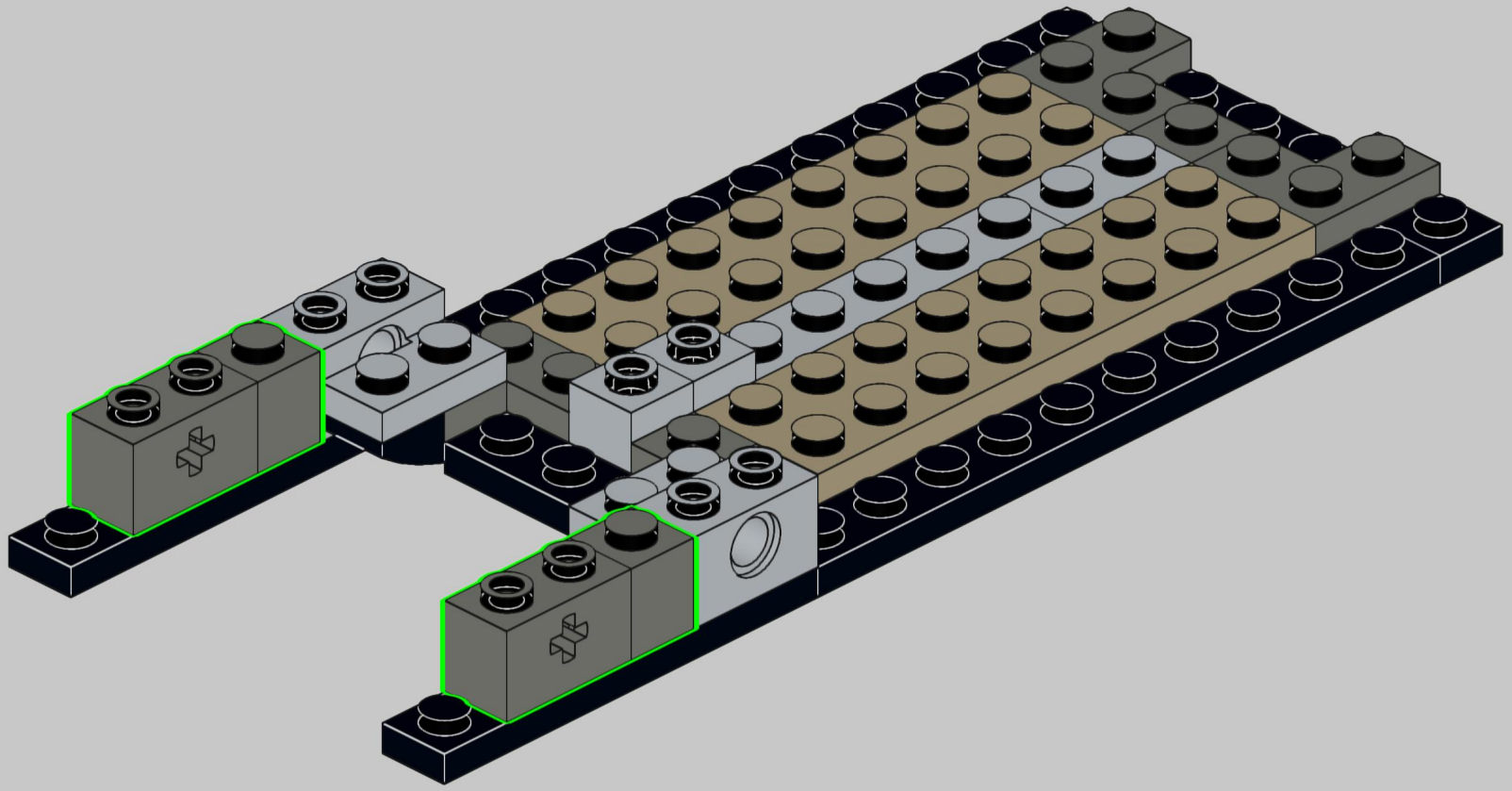

9

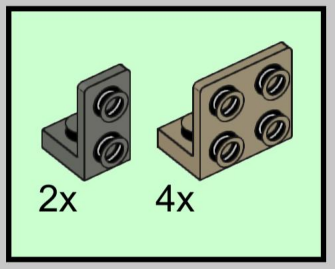

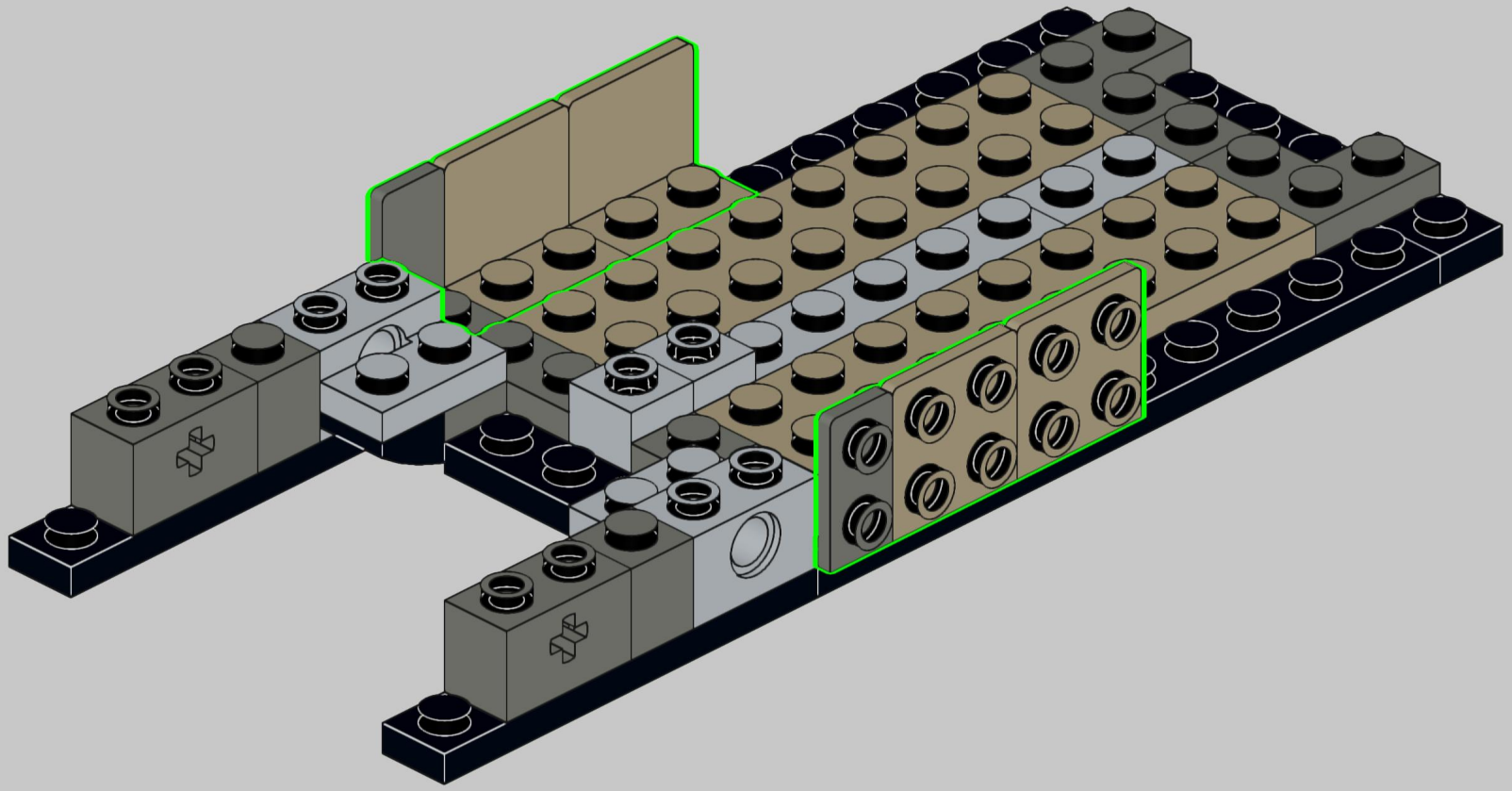

10

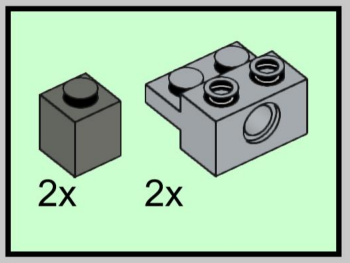

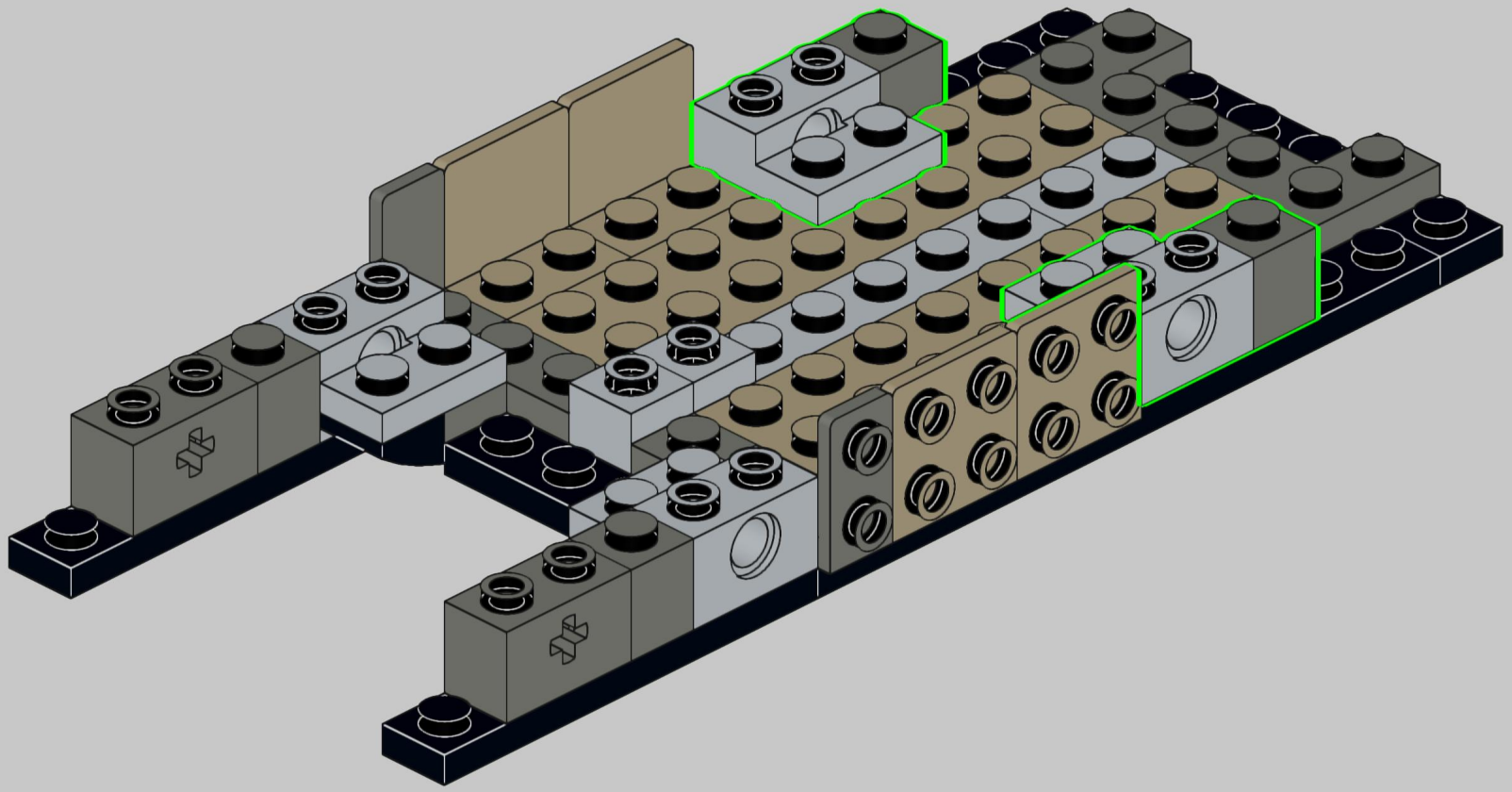

11

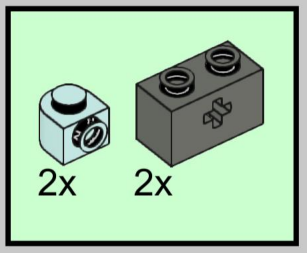

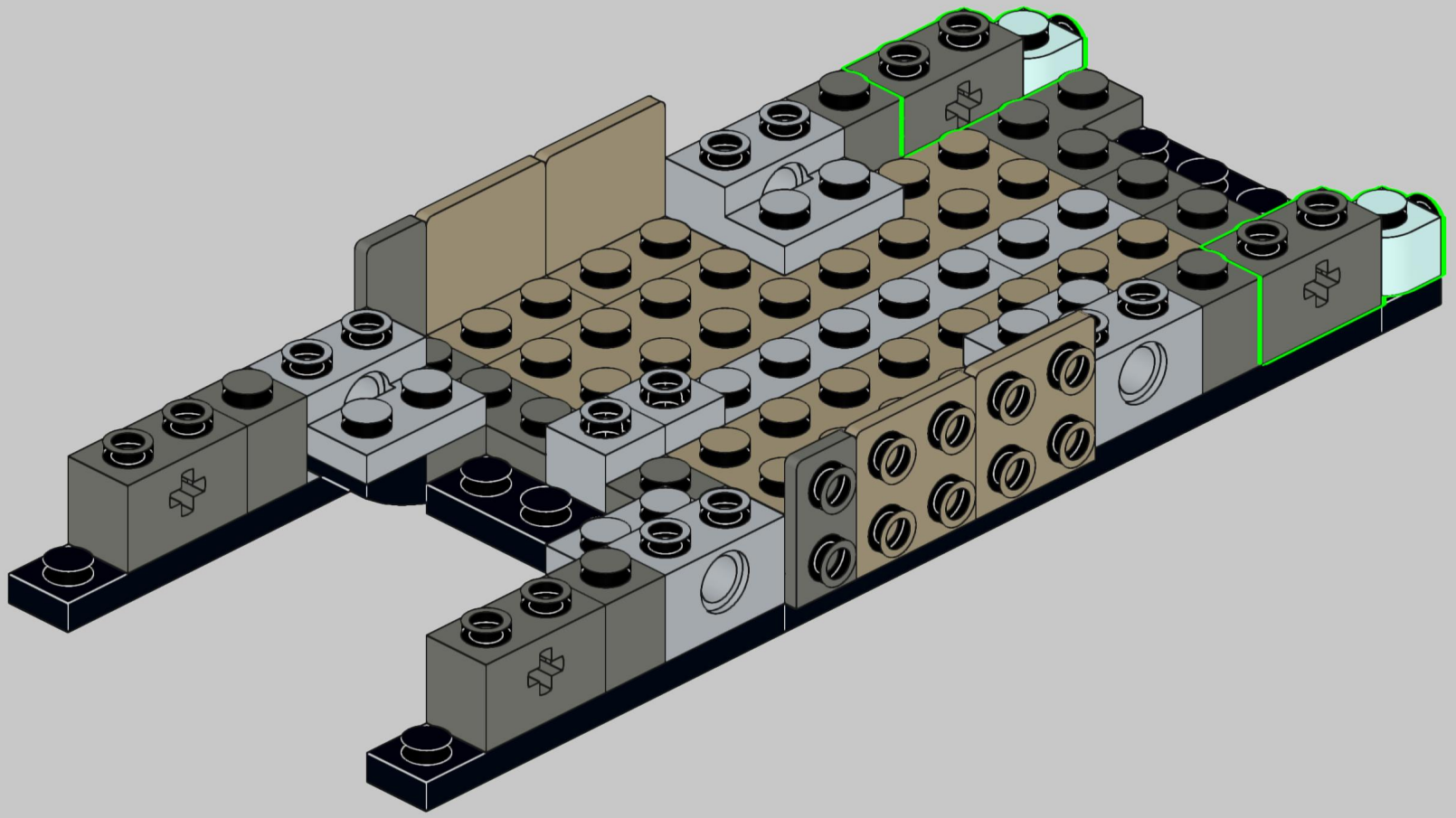

12

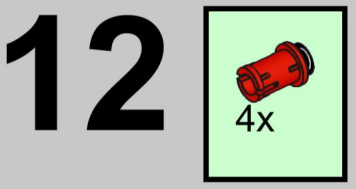

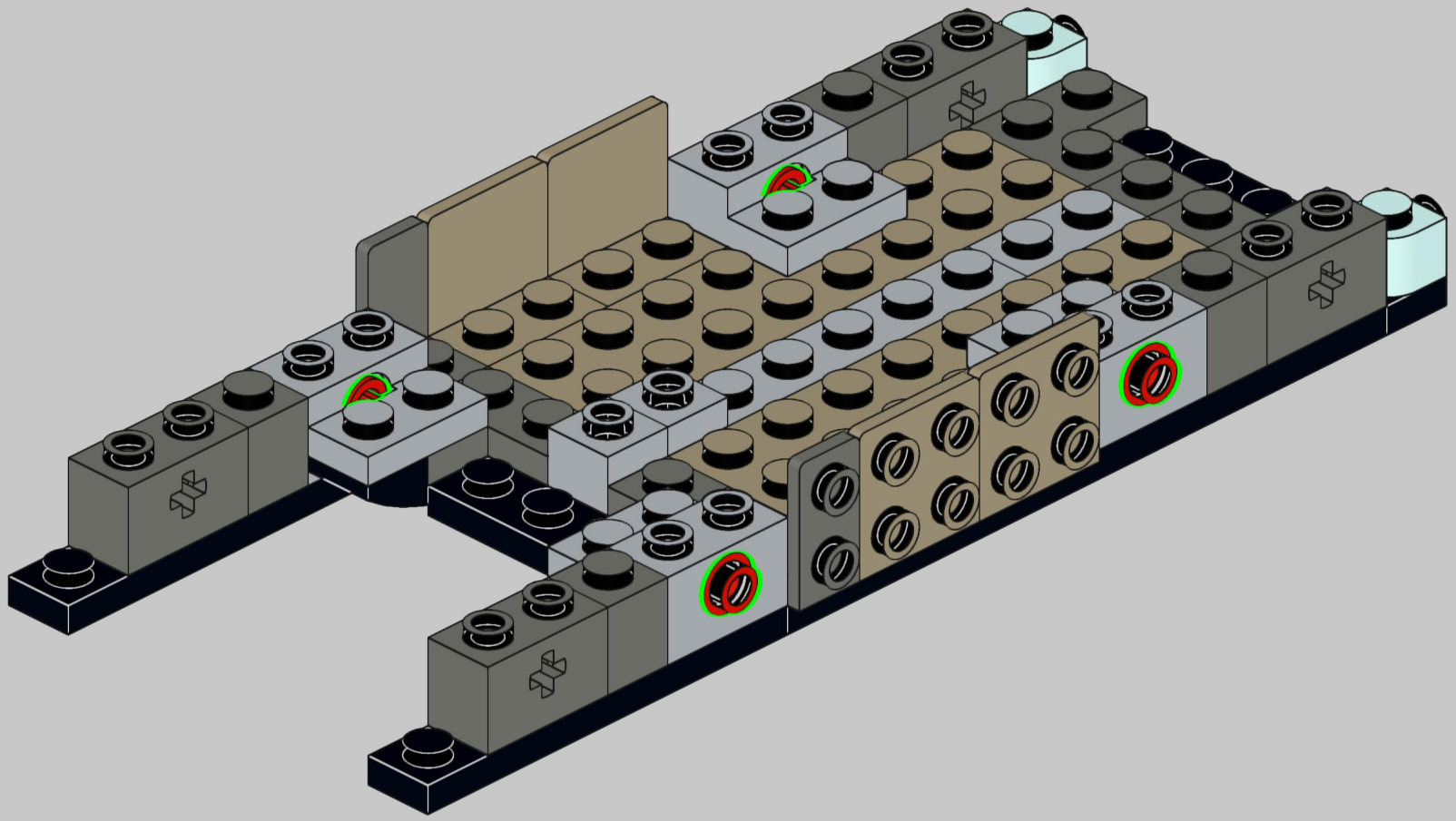

13

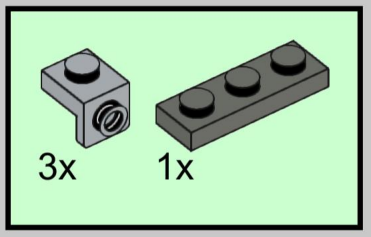

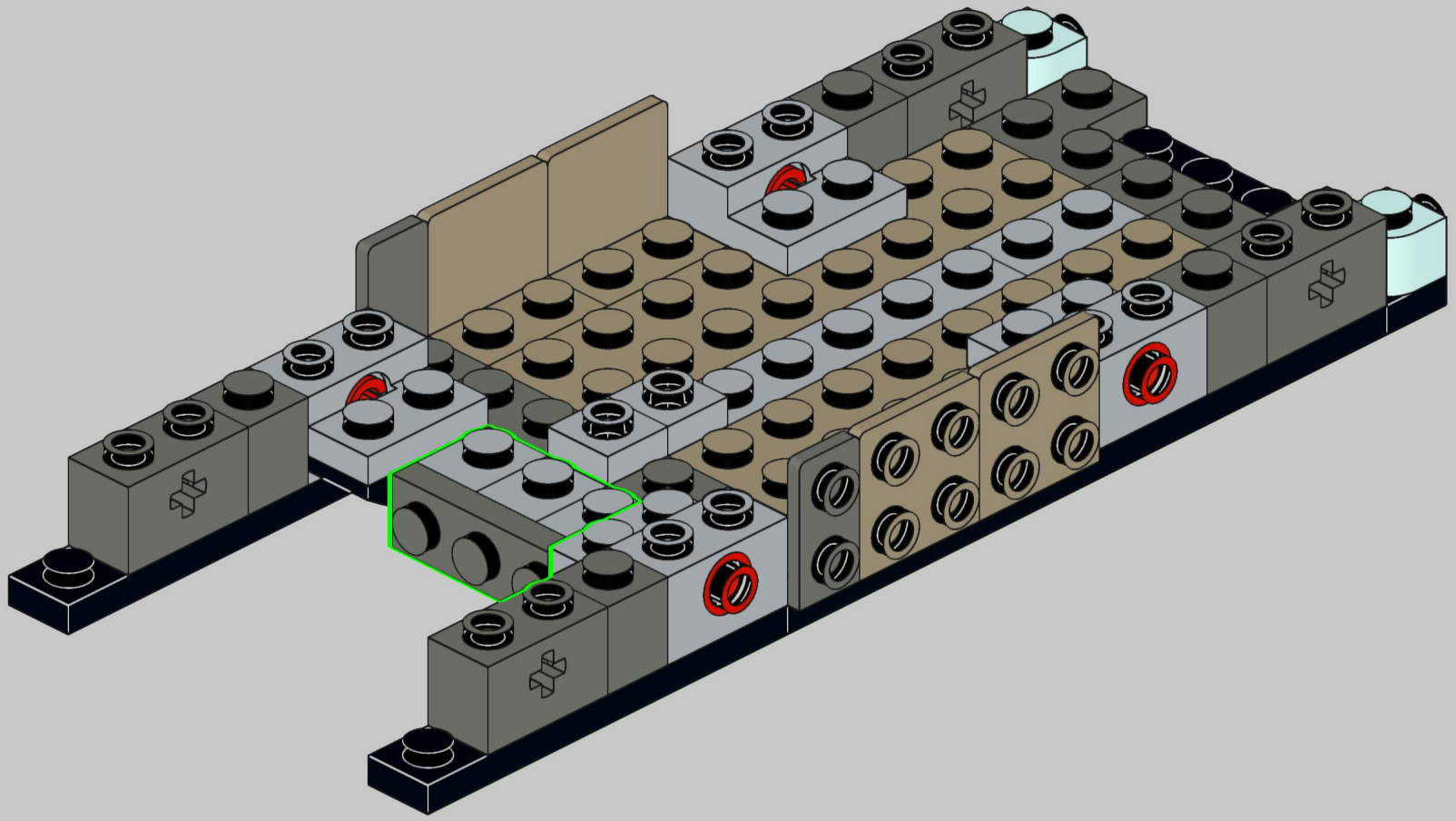

14

3x

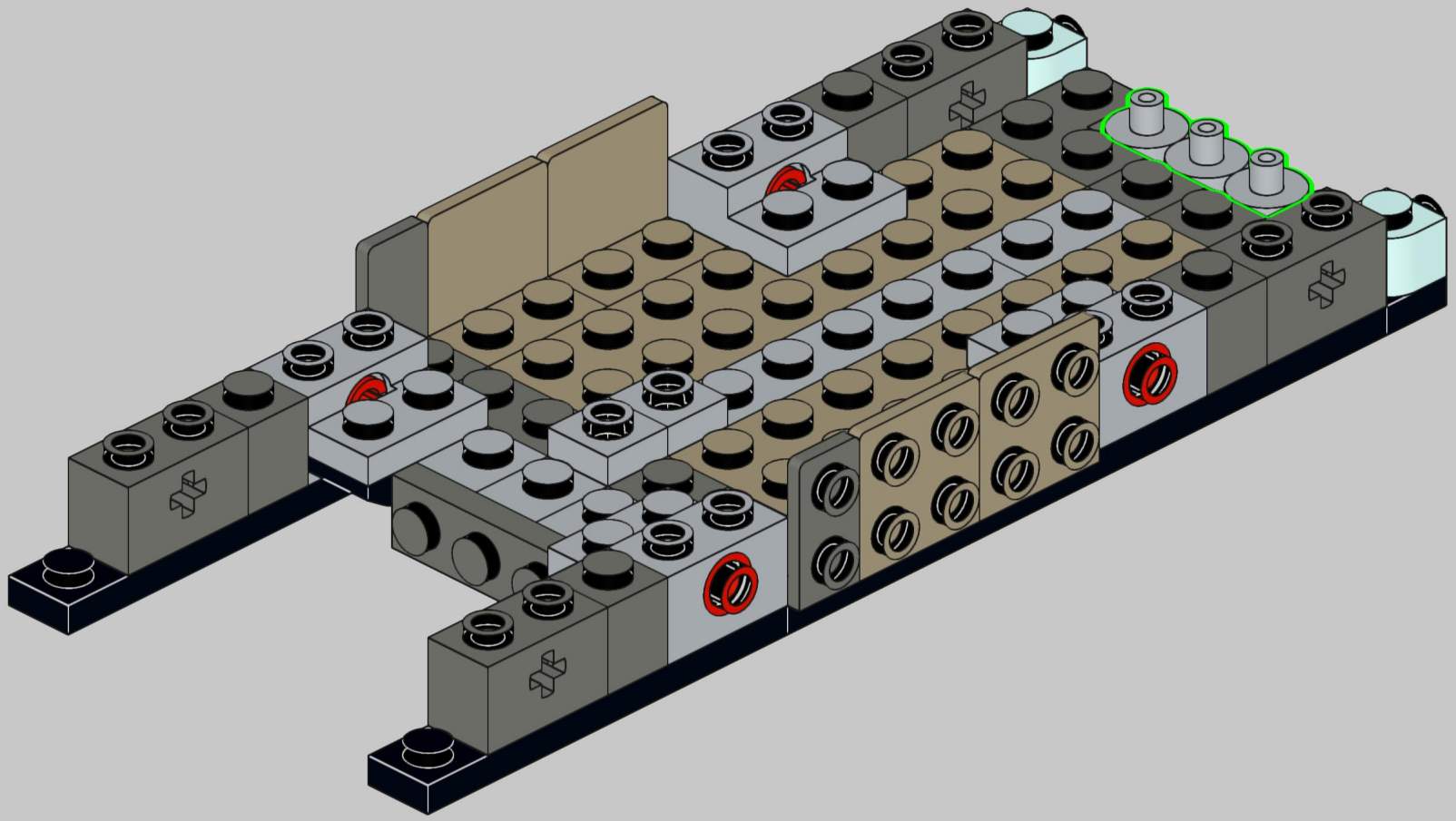

15

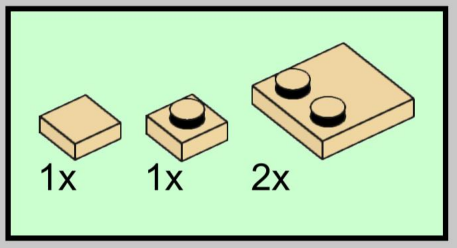

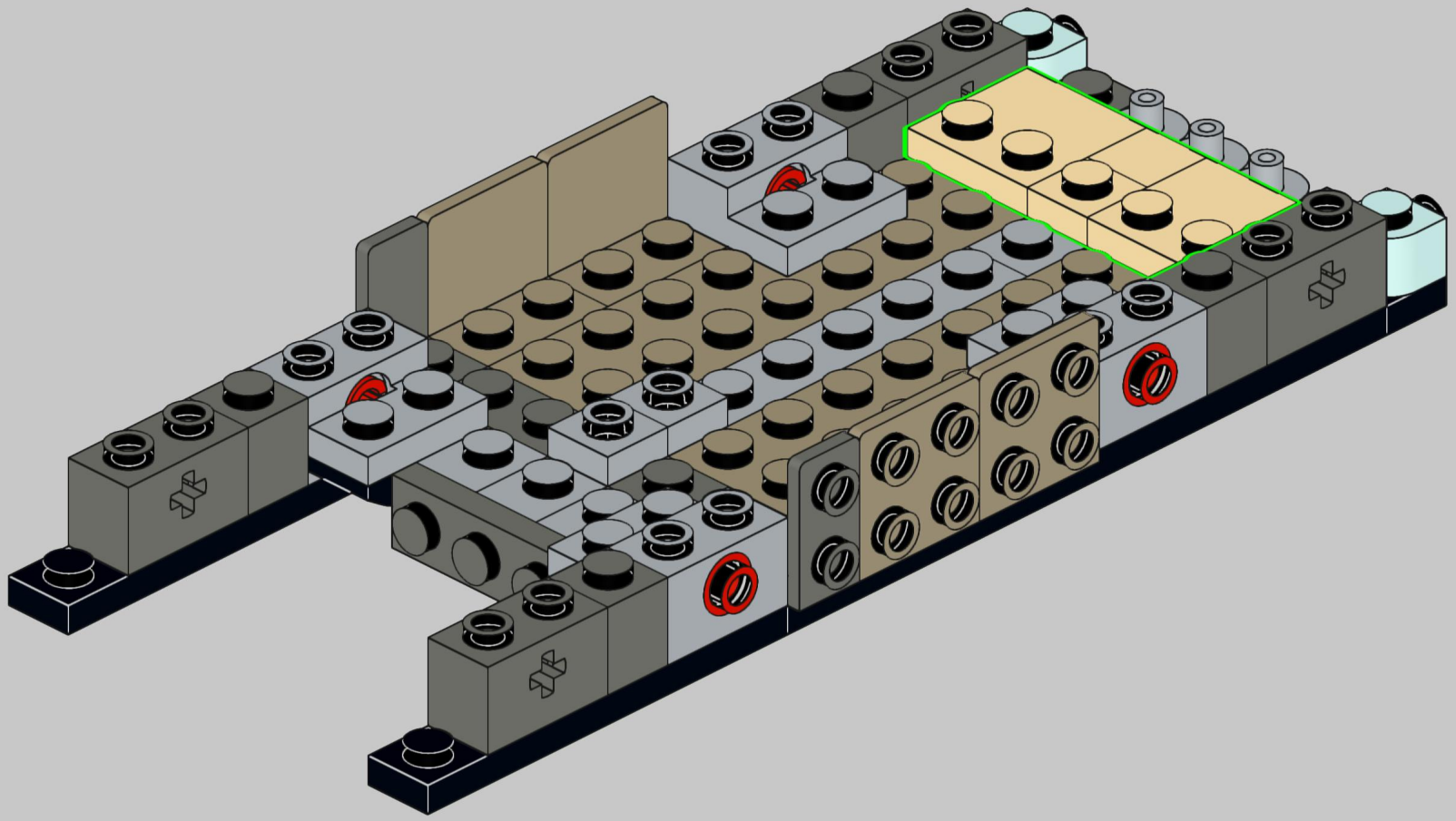

16

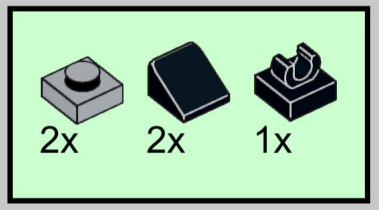

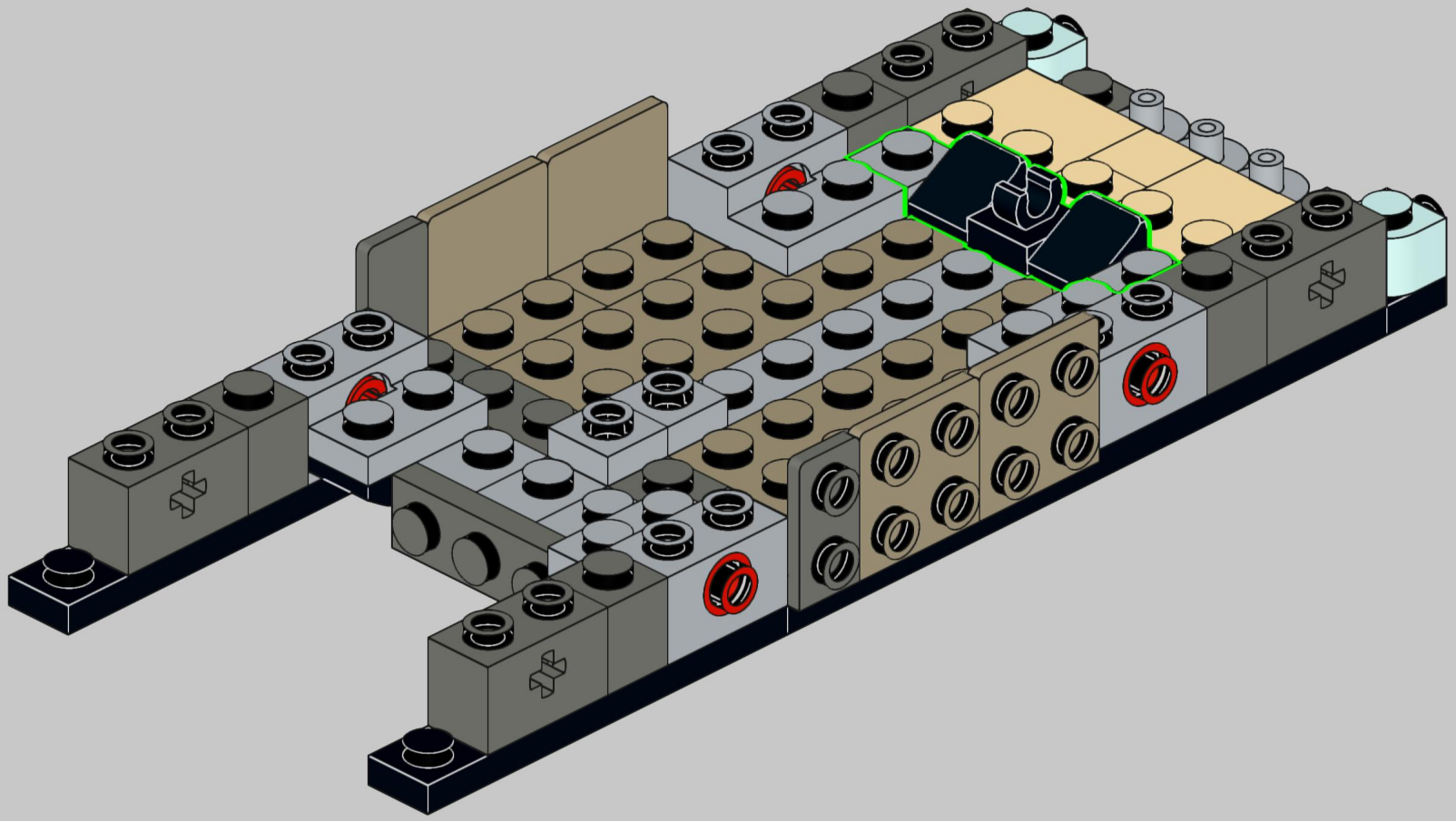

17

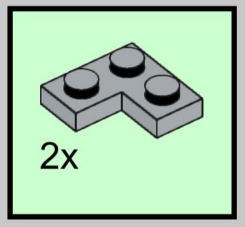

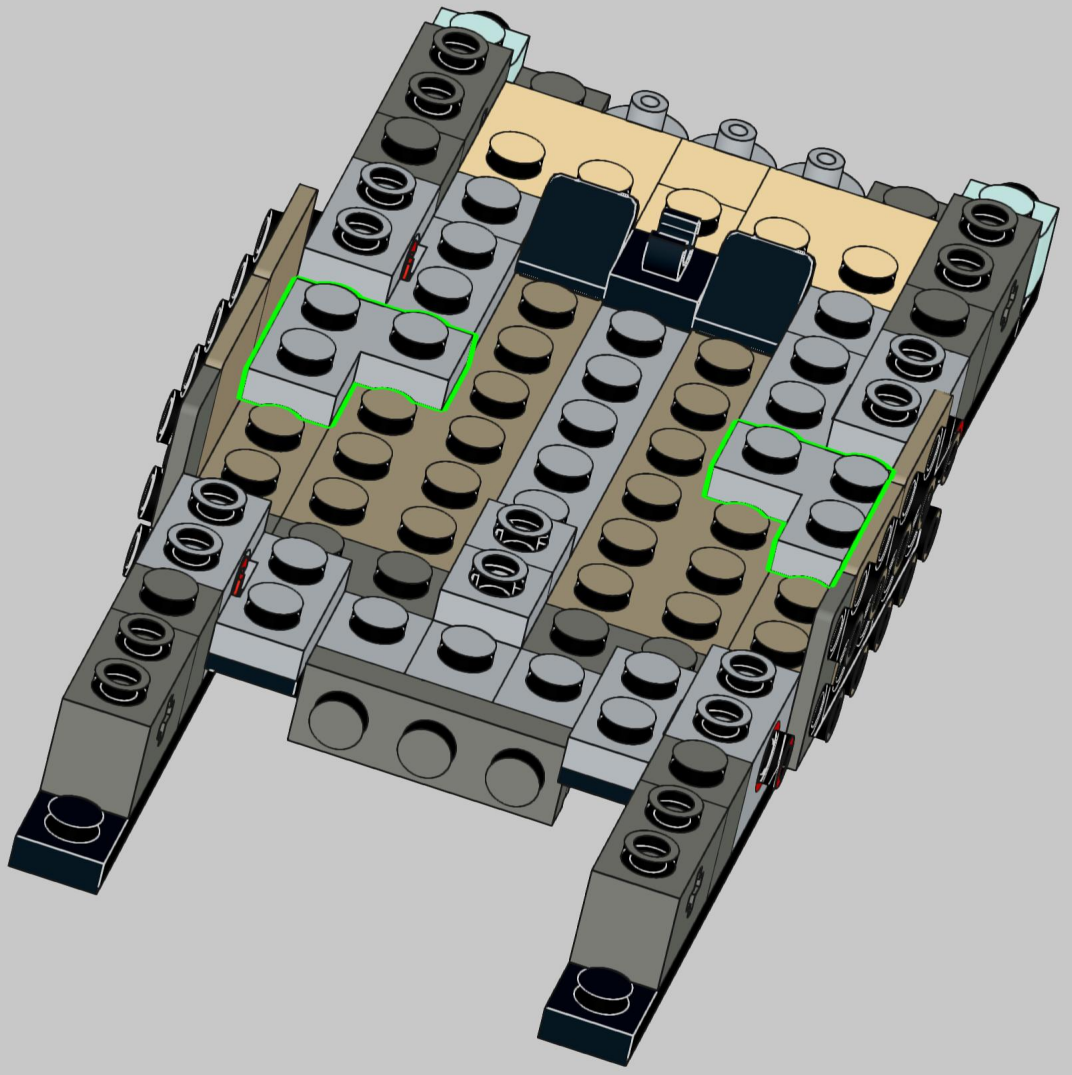

18

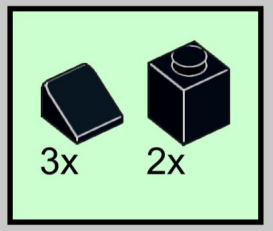

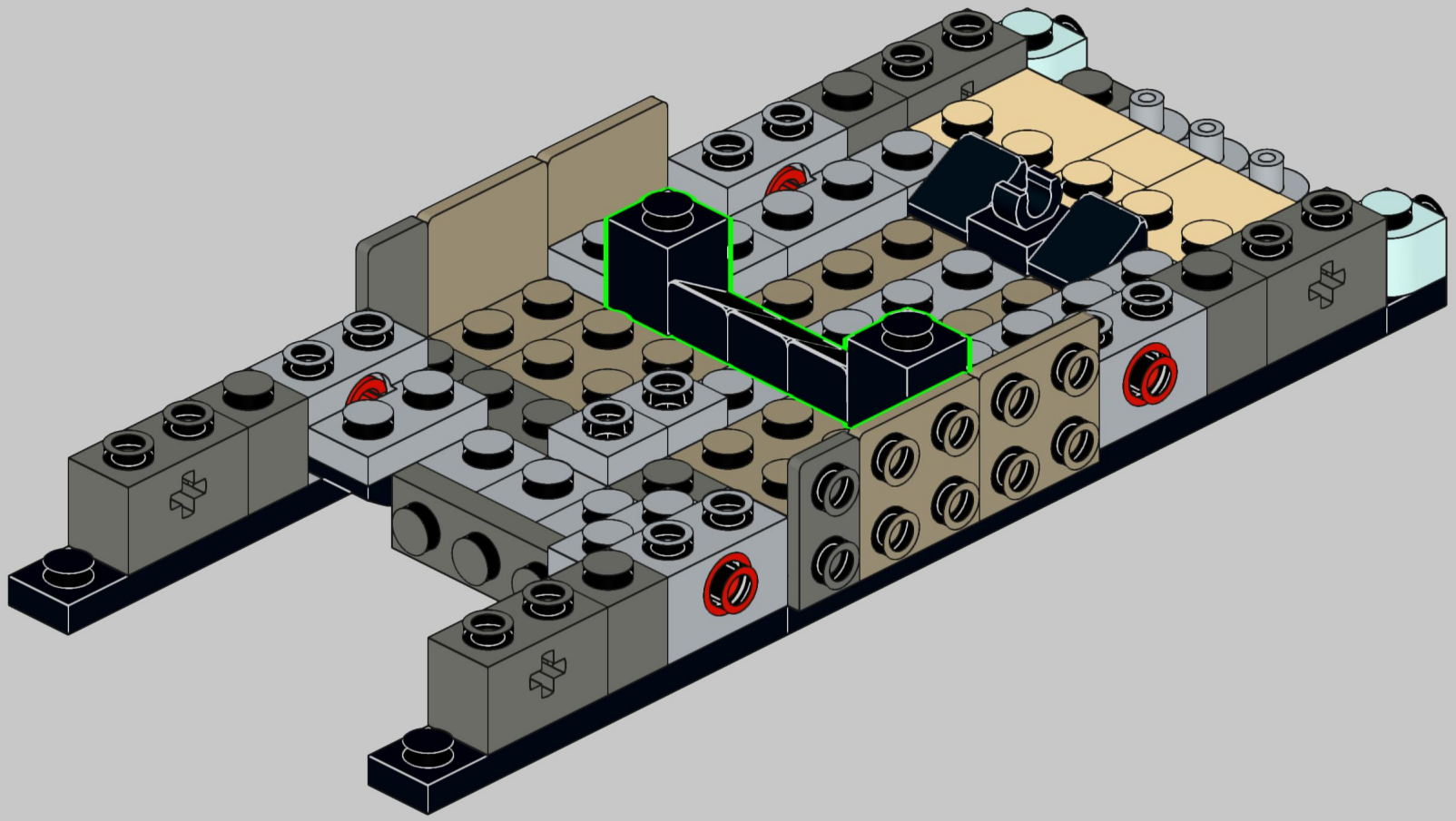

19

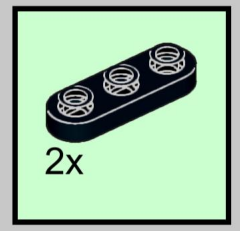

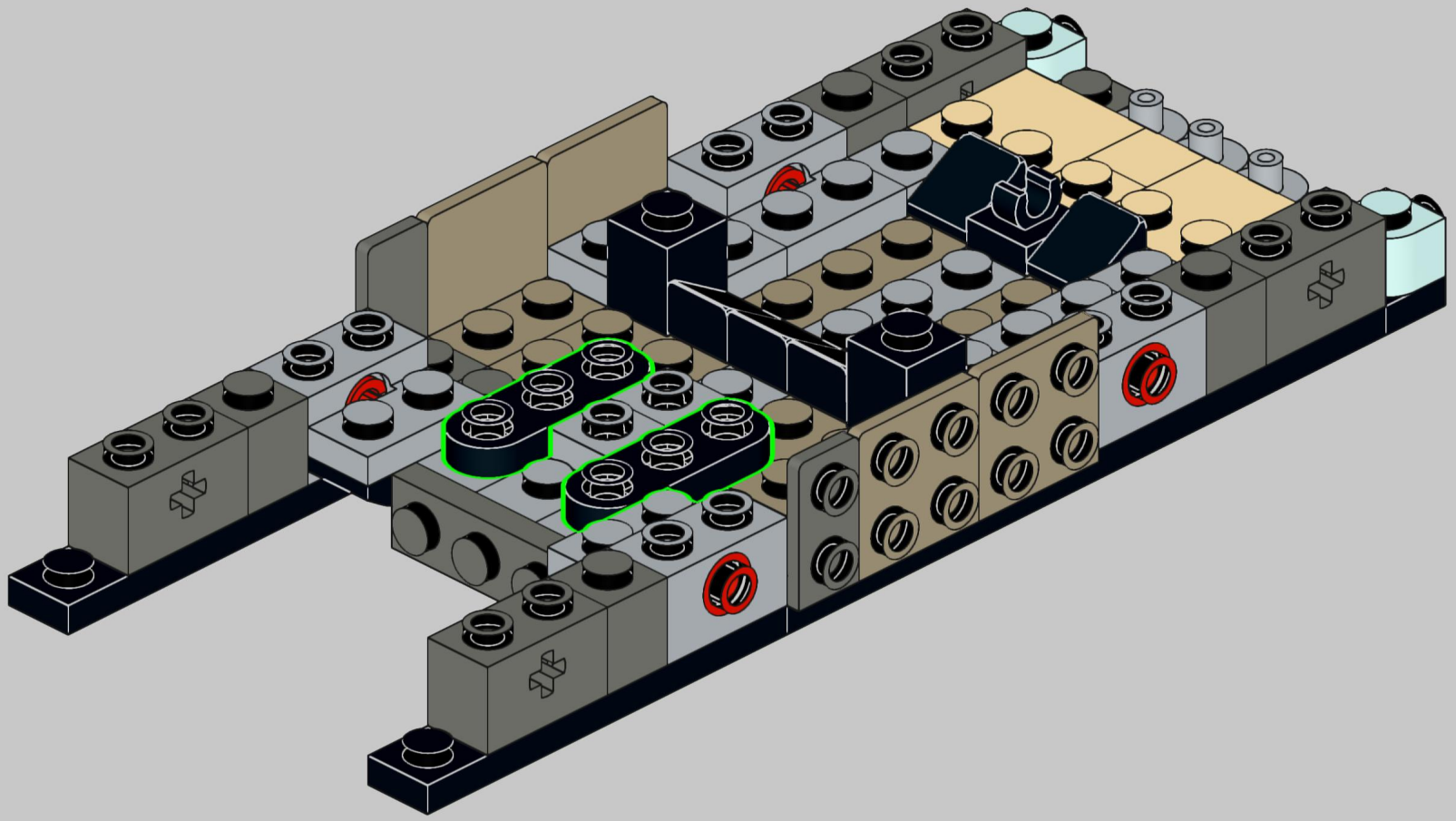

20

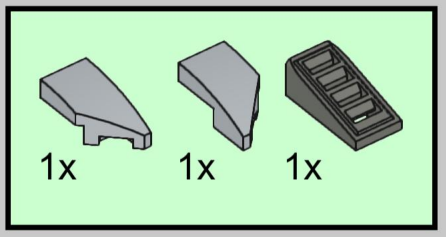

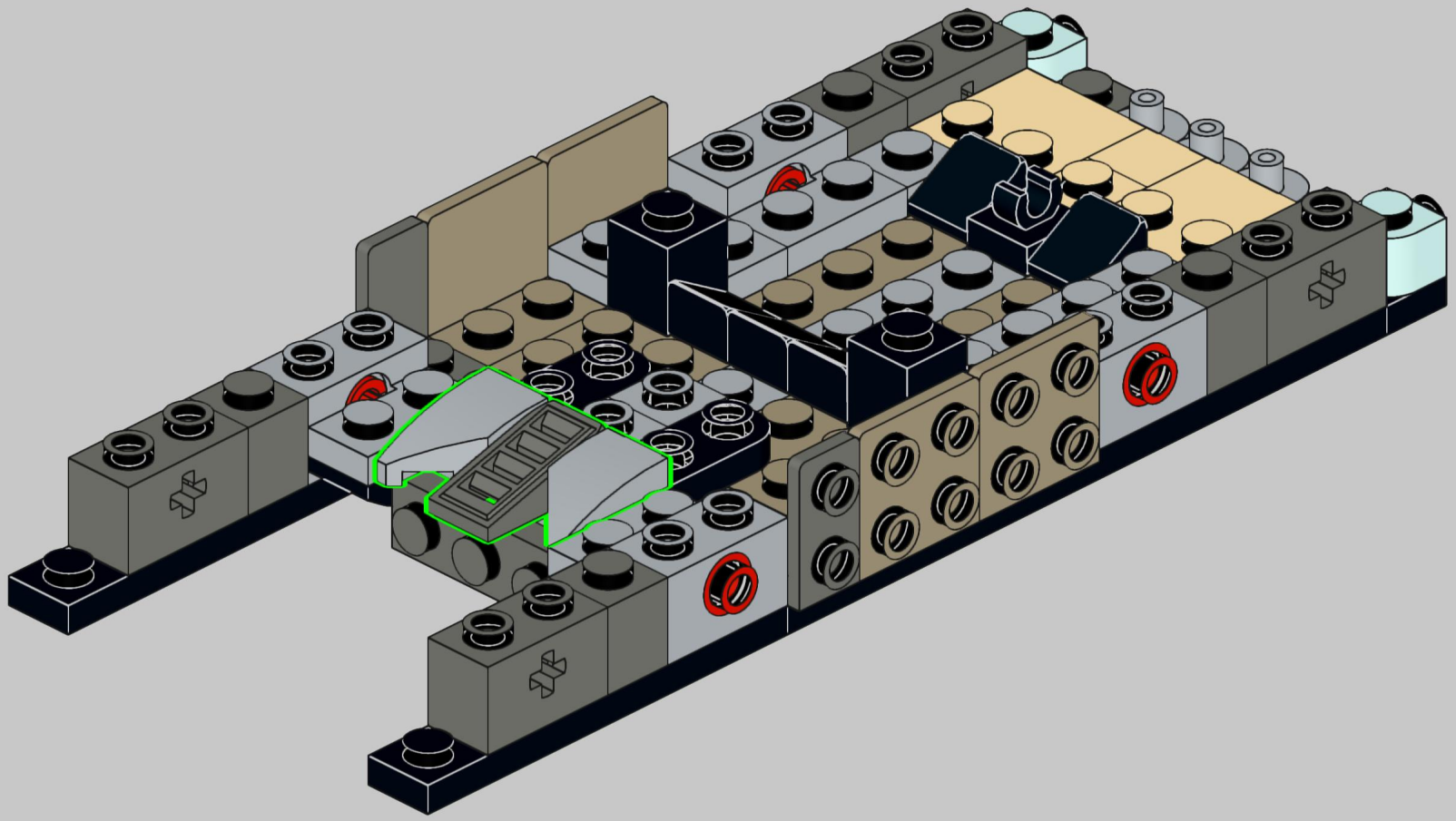

21

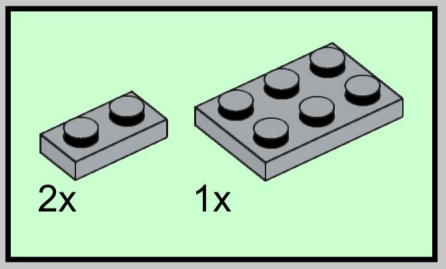

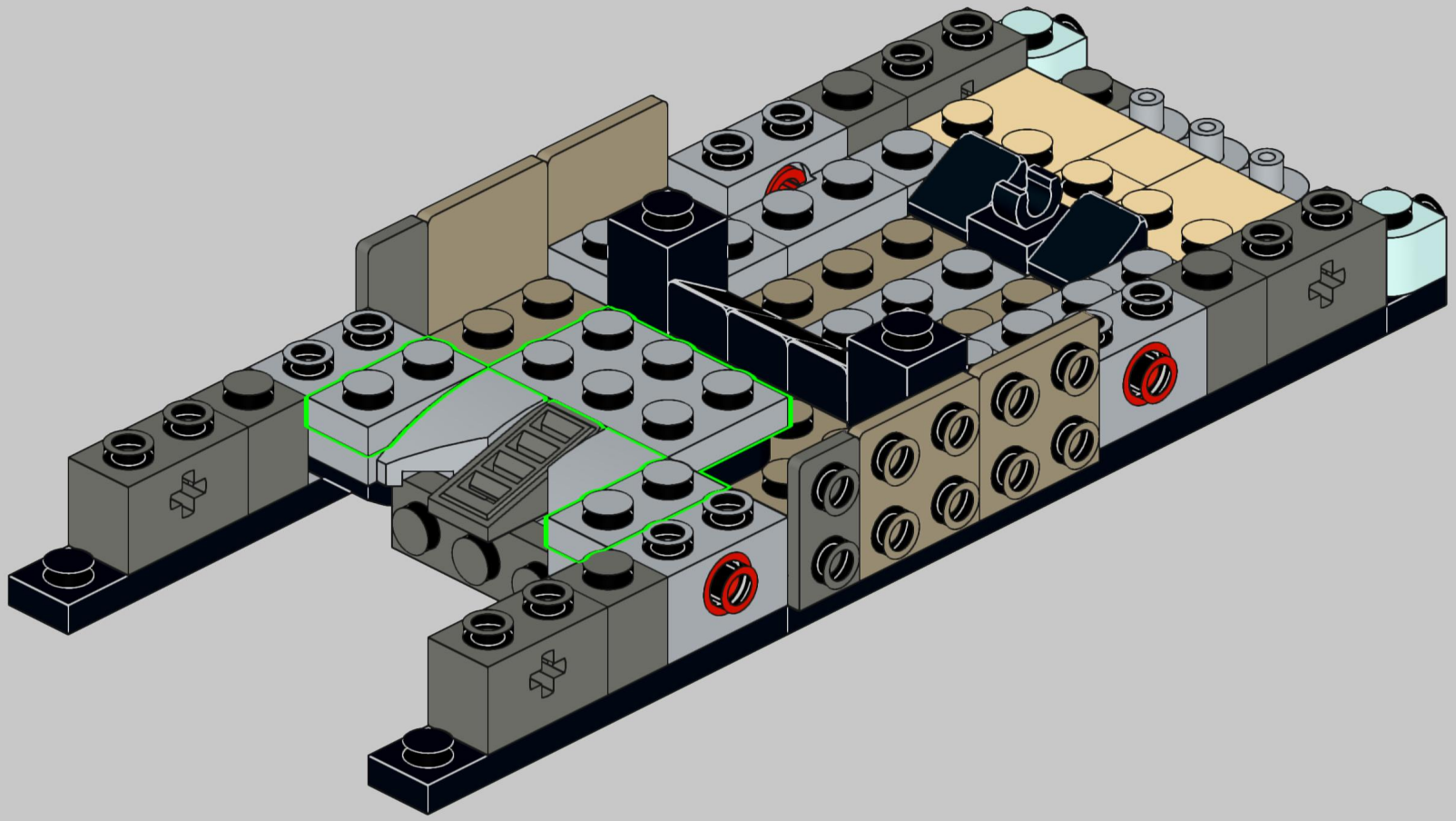

22

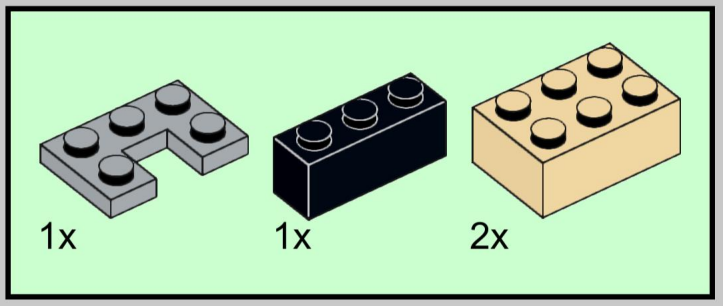

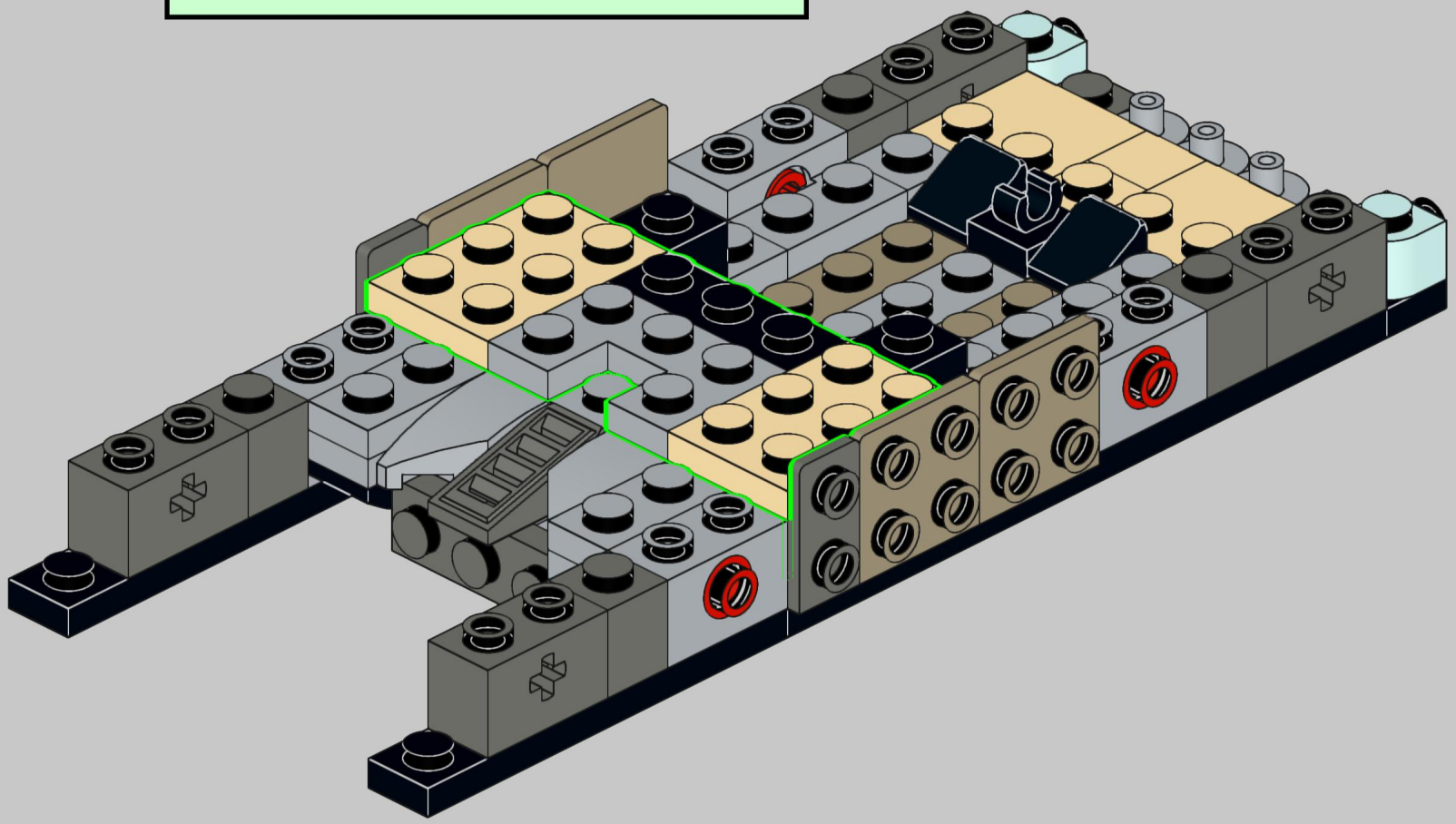

23

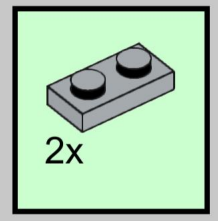



24

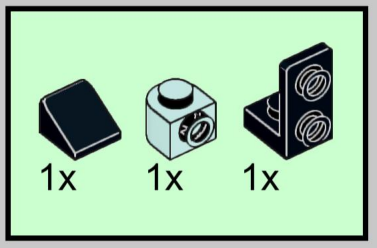

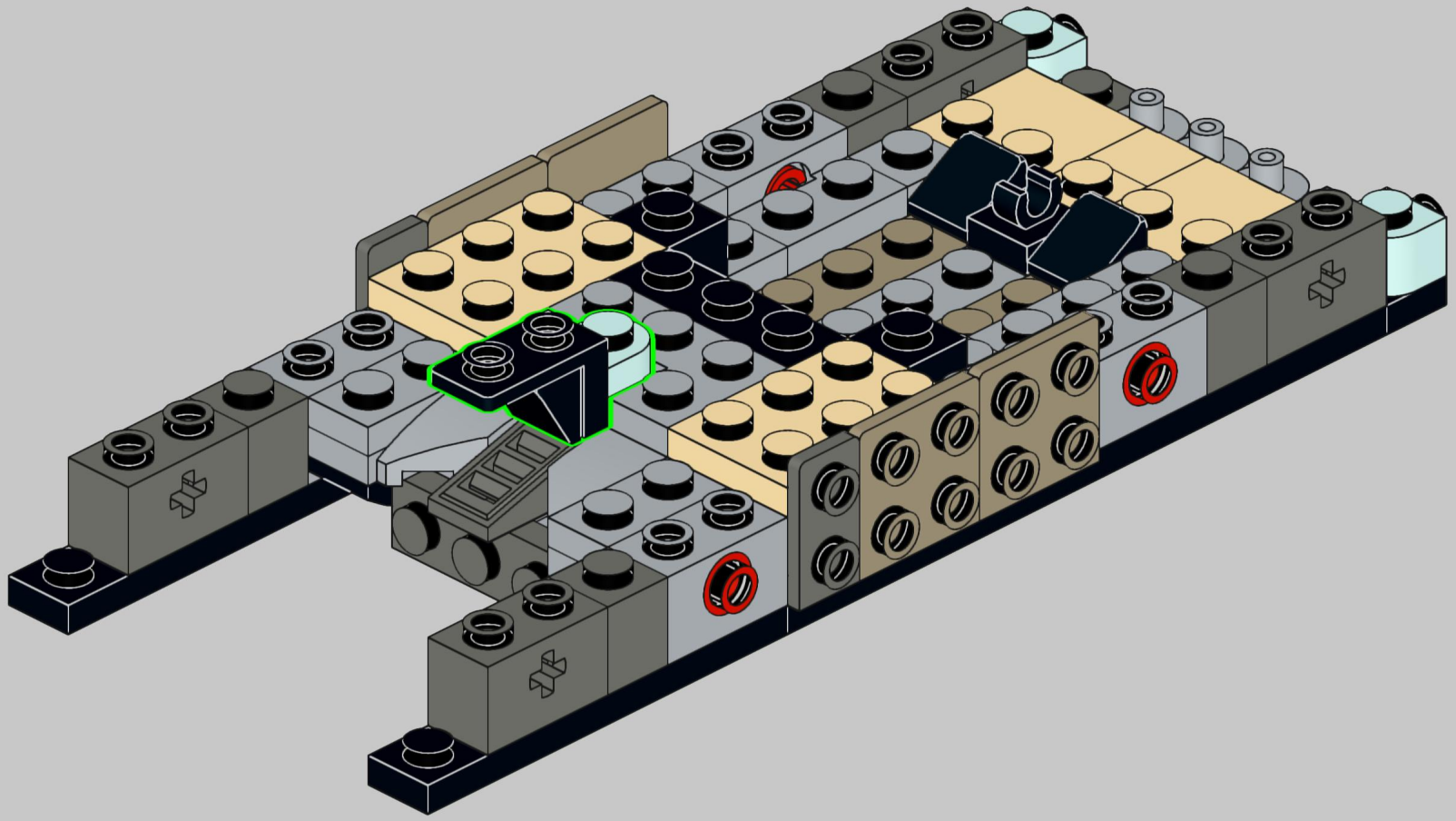

25

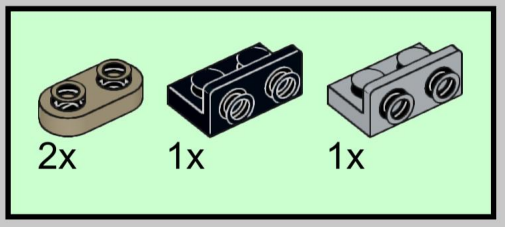

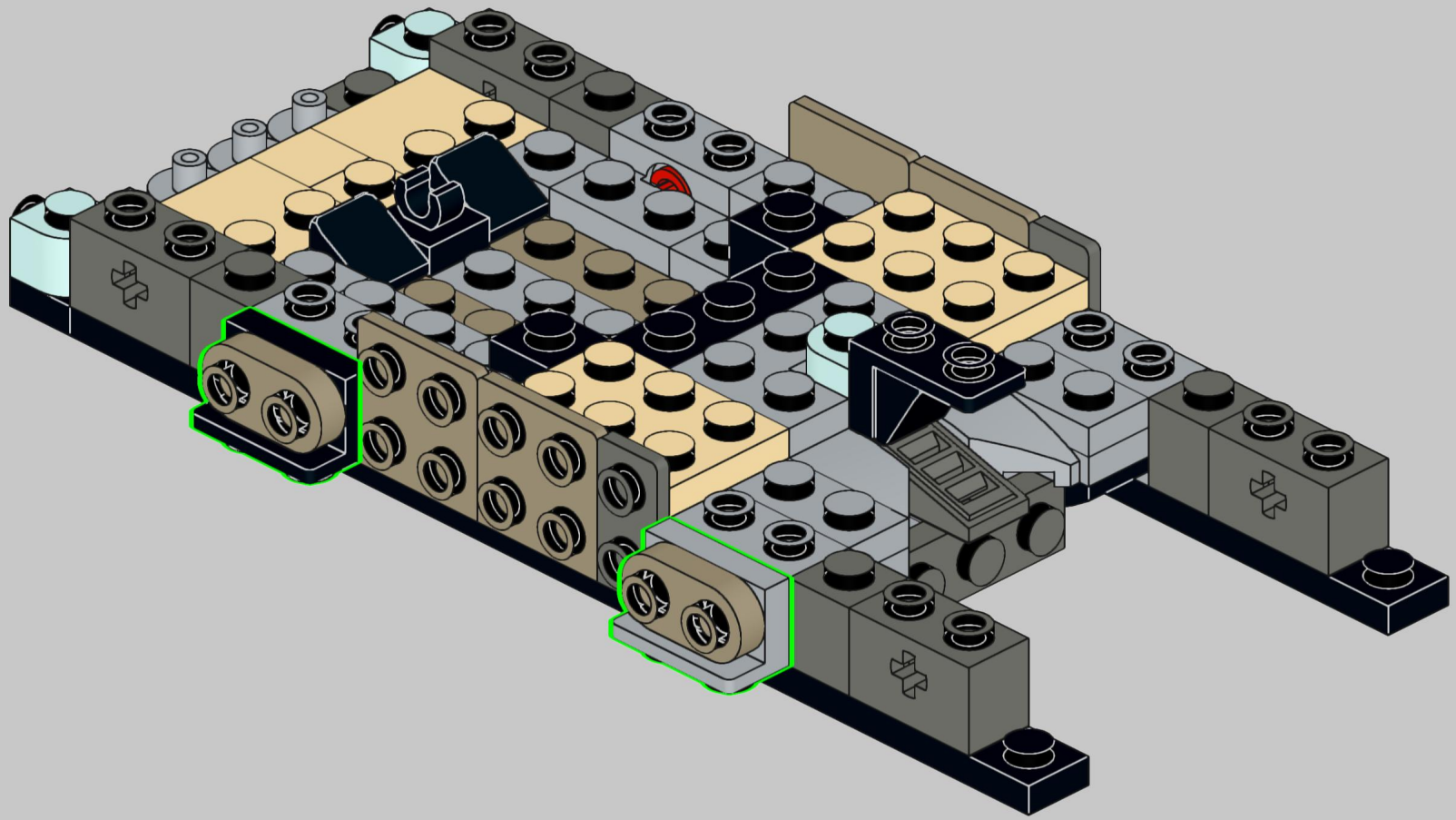

26

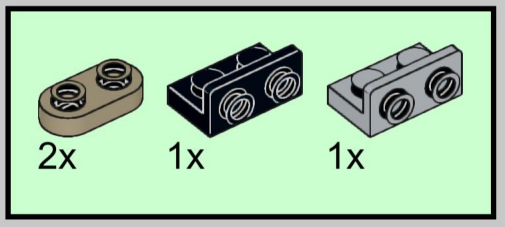

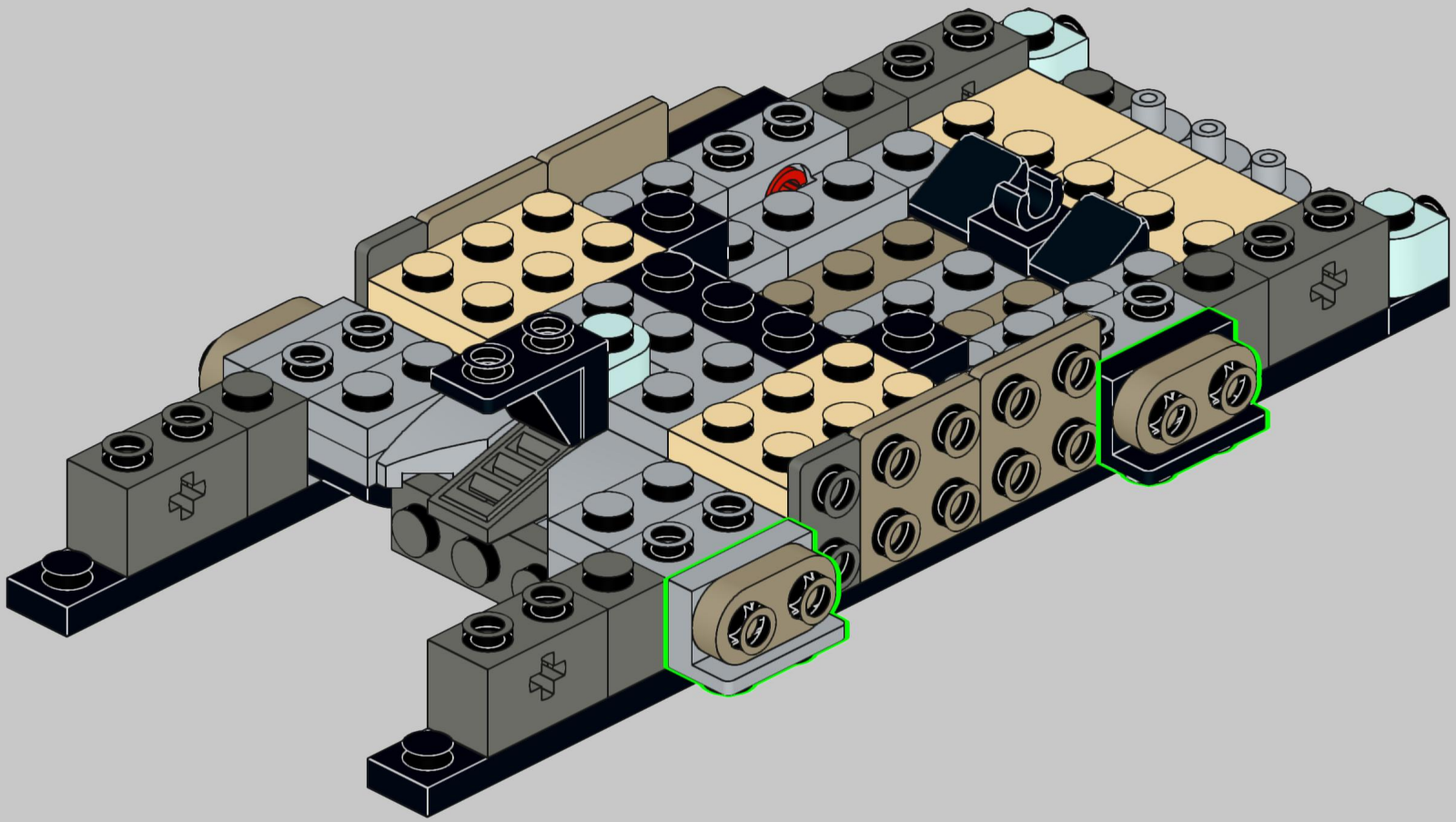

27

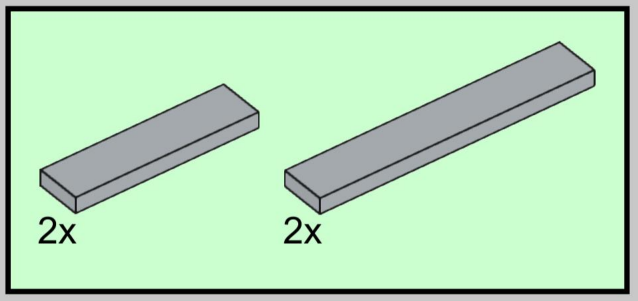

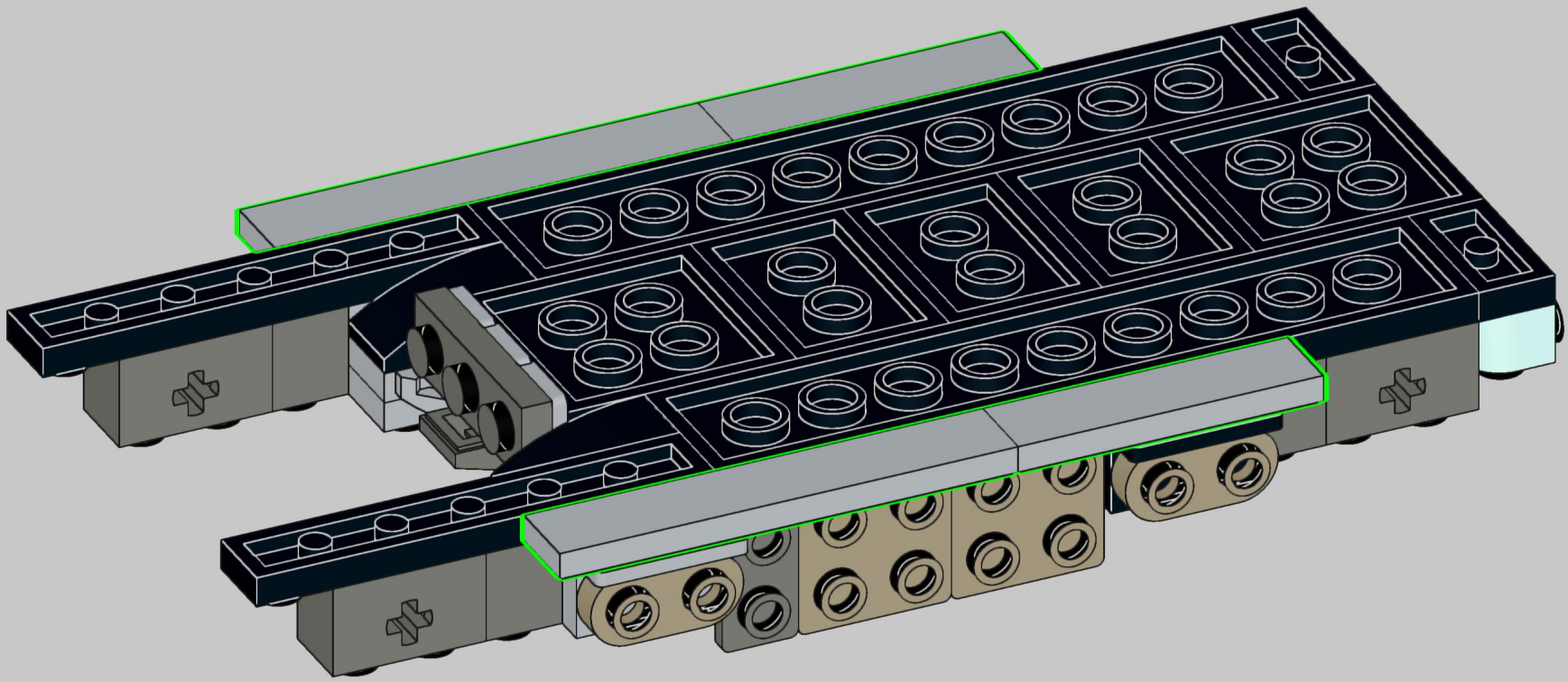

28

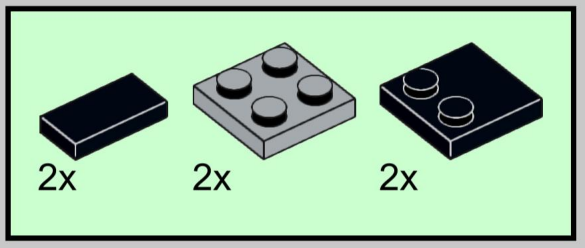

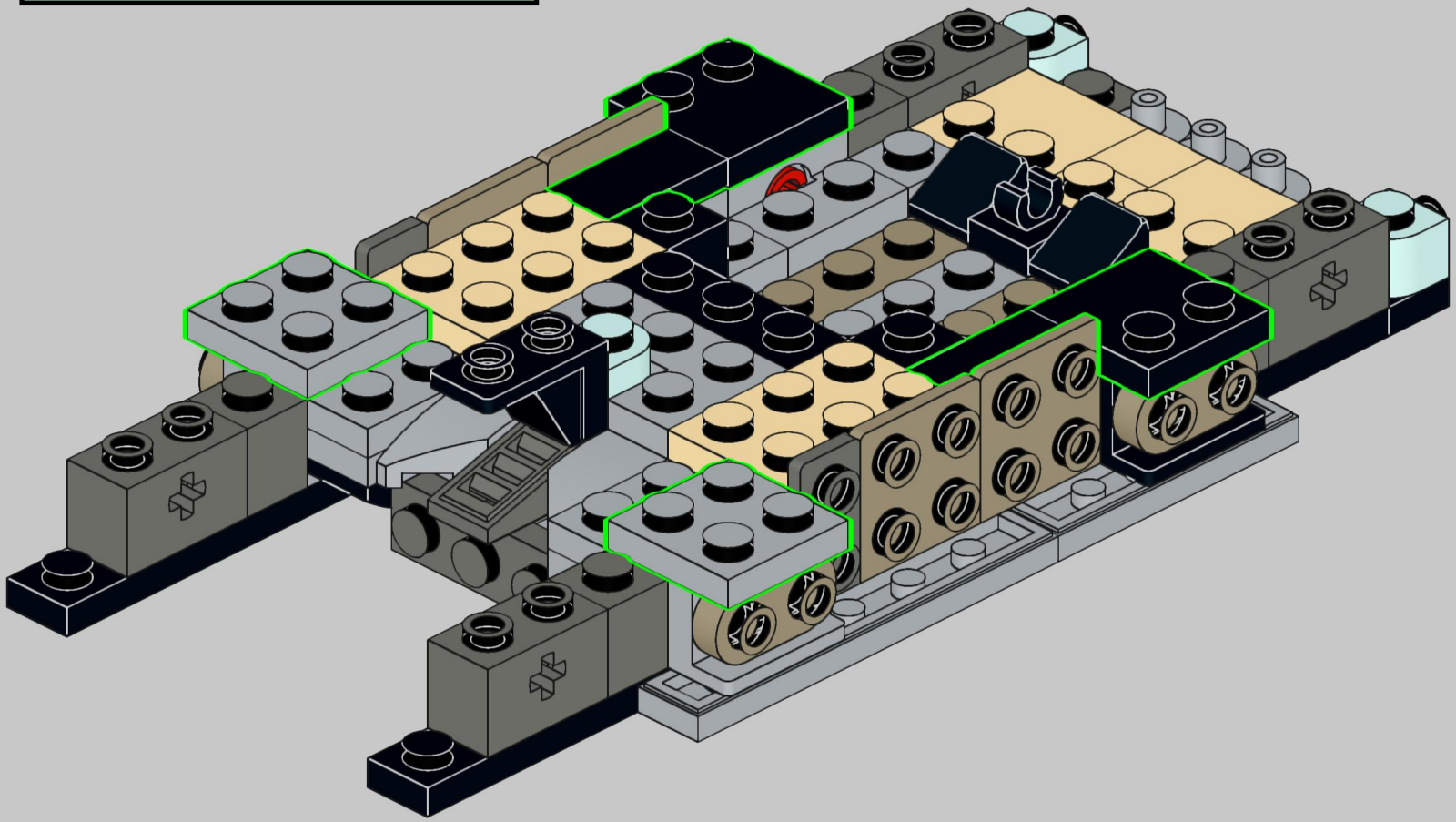

29

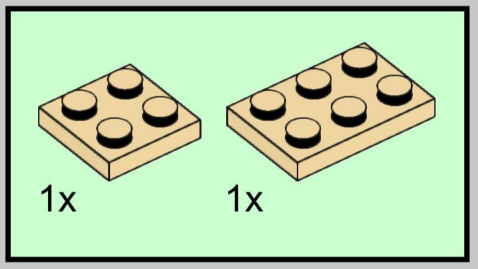

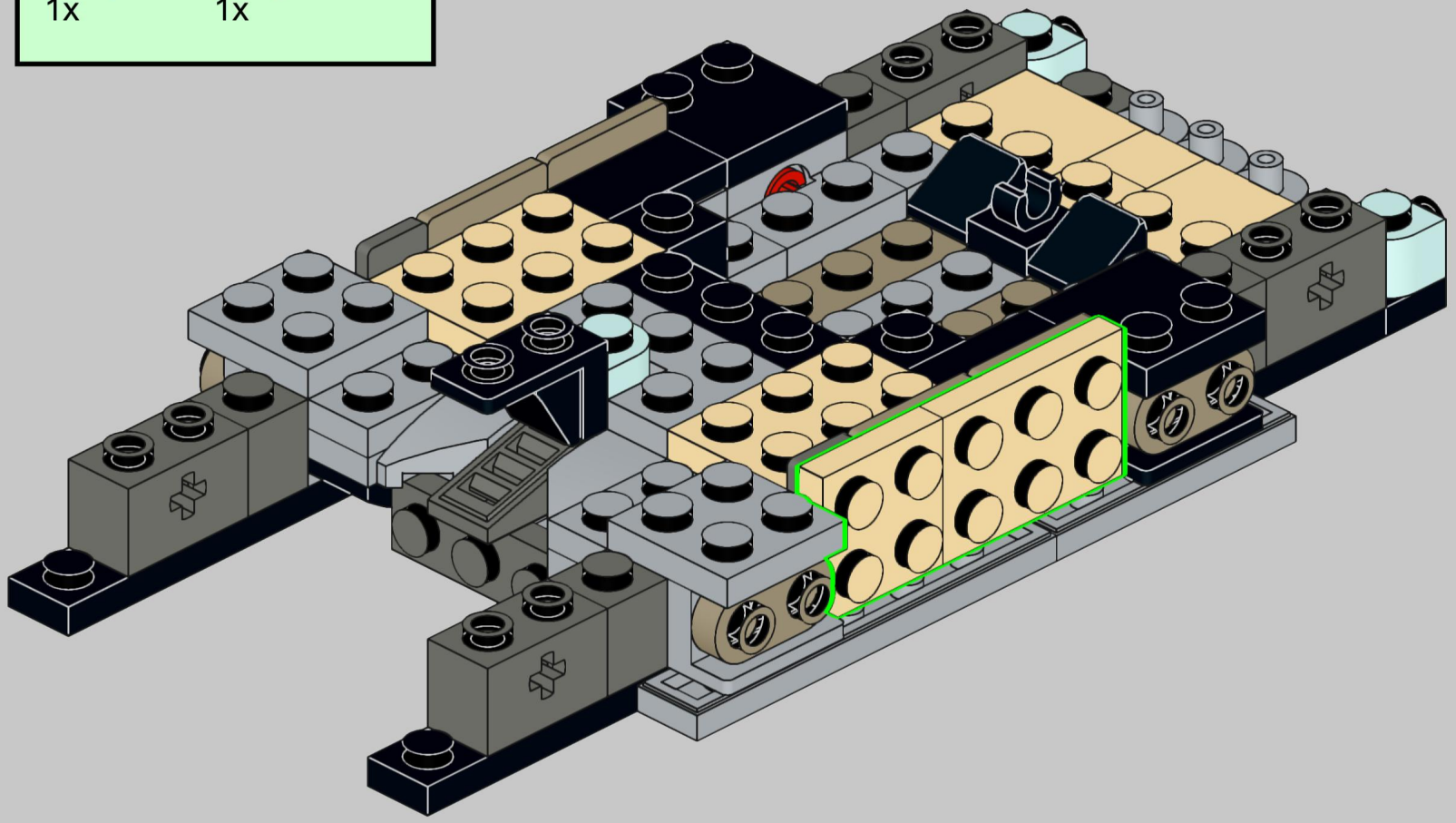

30

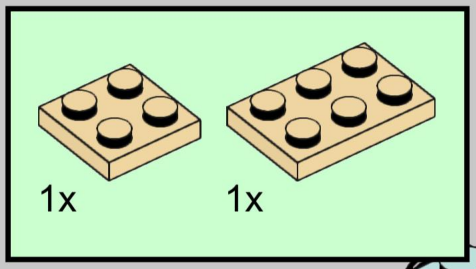

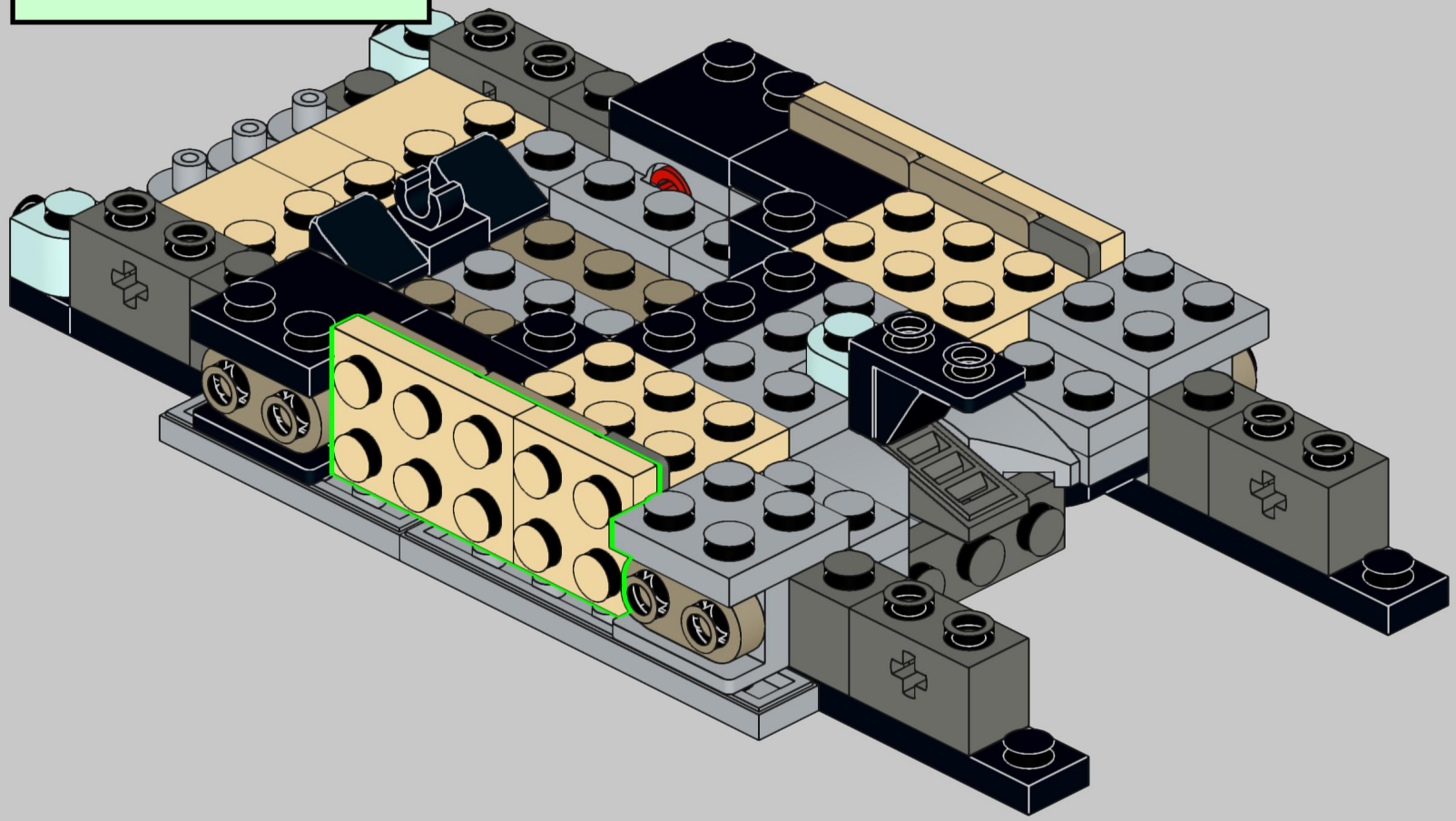

31

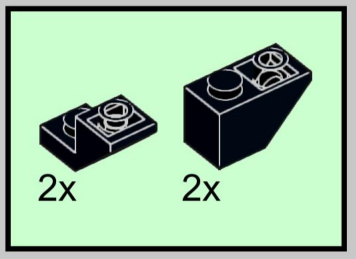

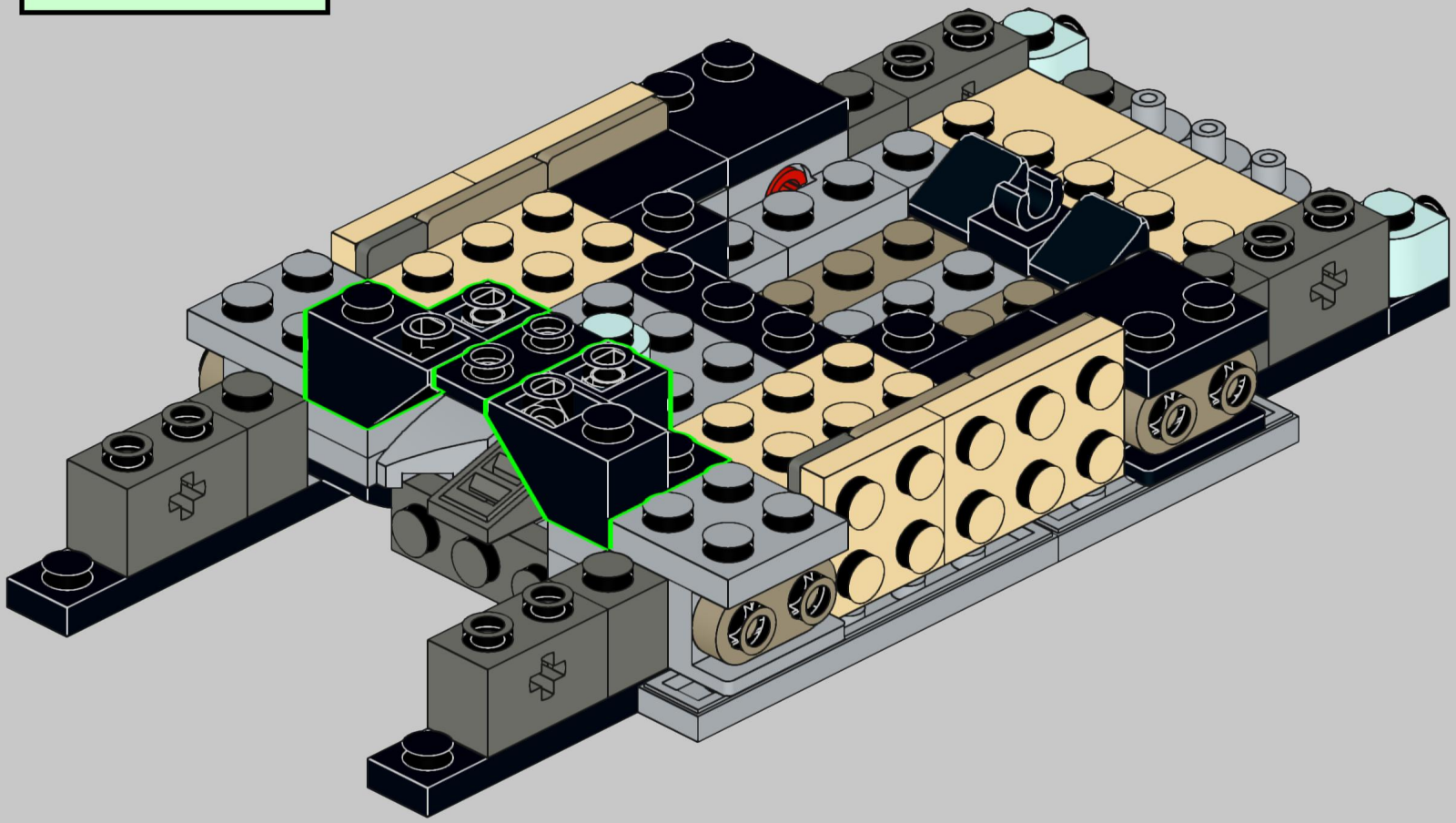

32

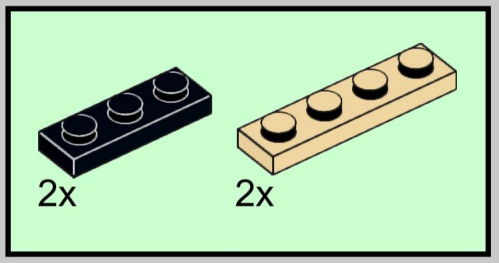

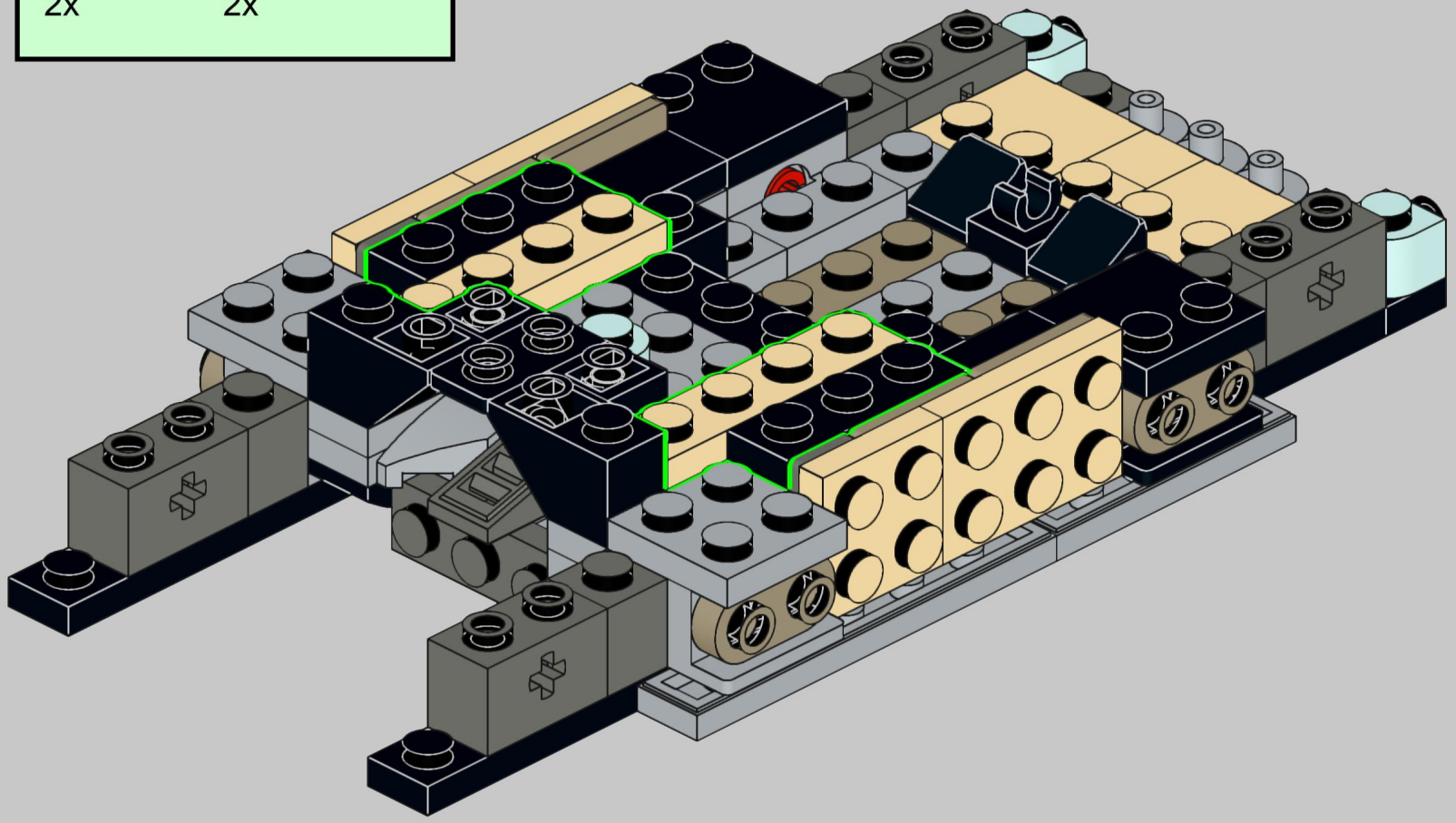

33

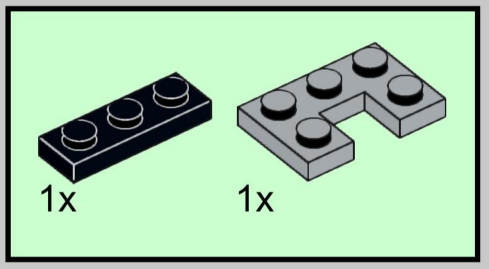

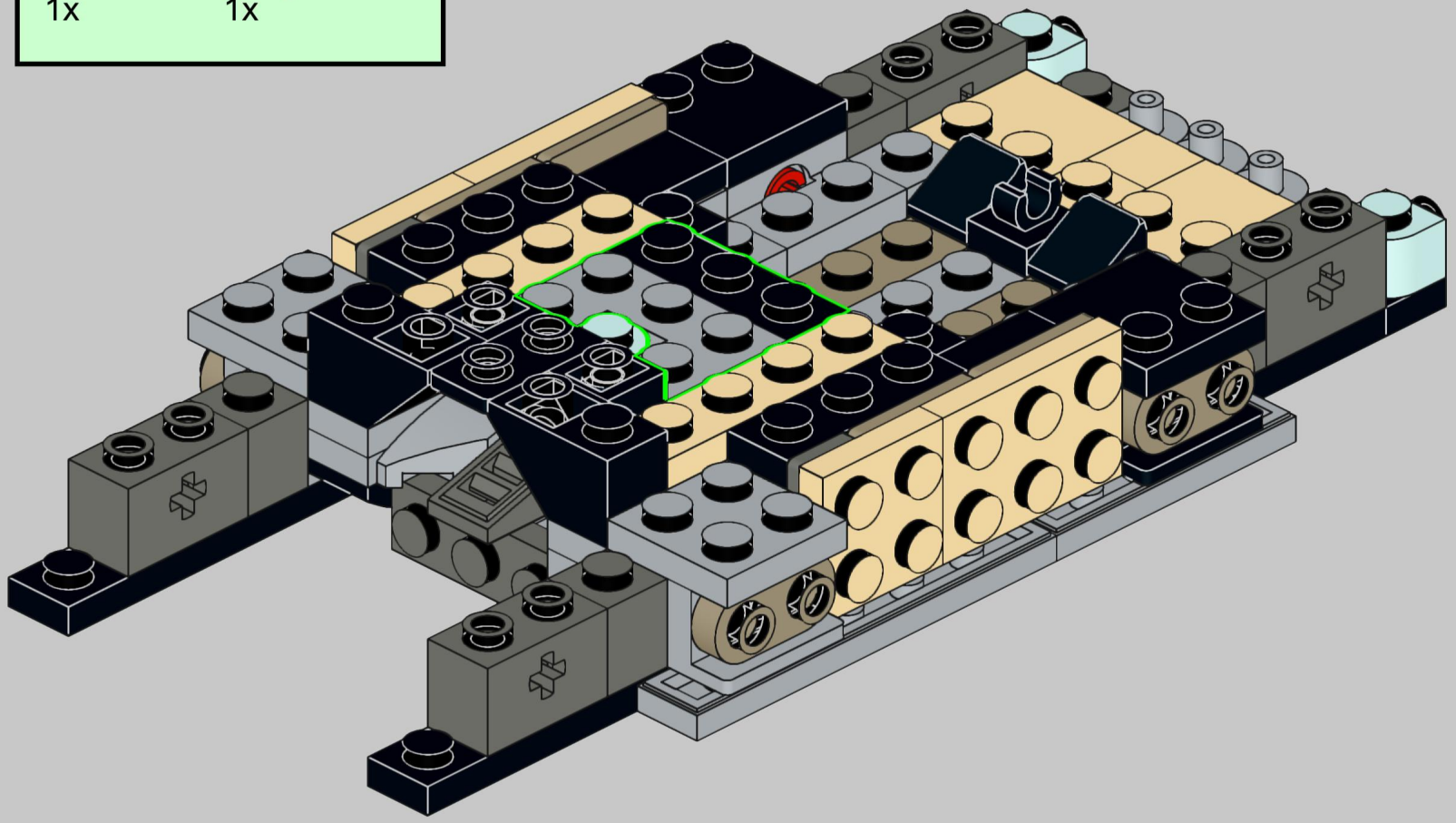

34

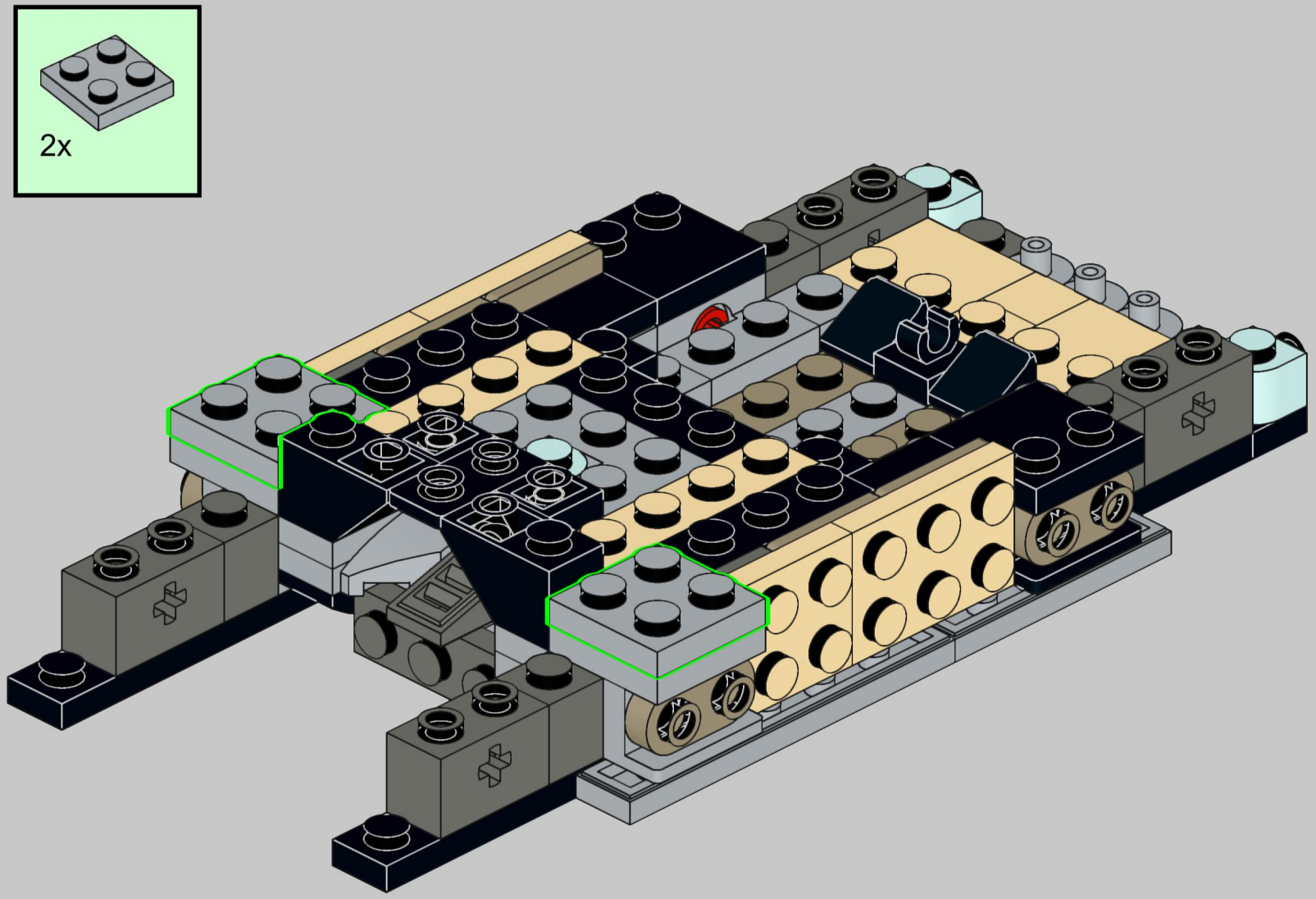

35

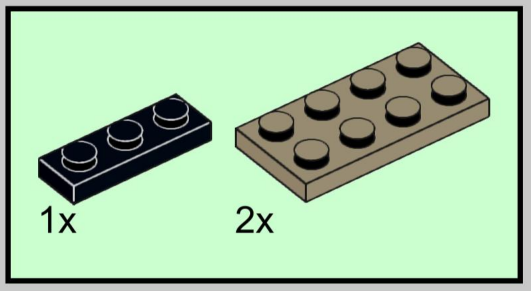

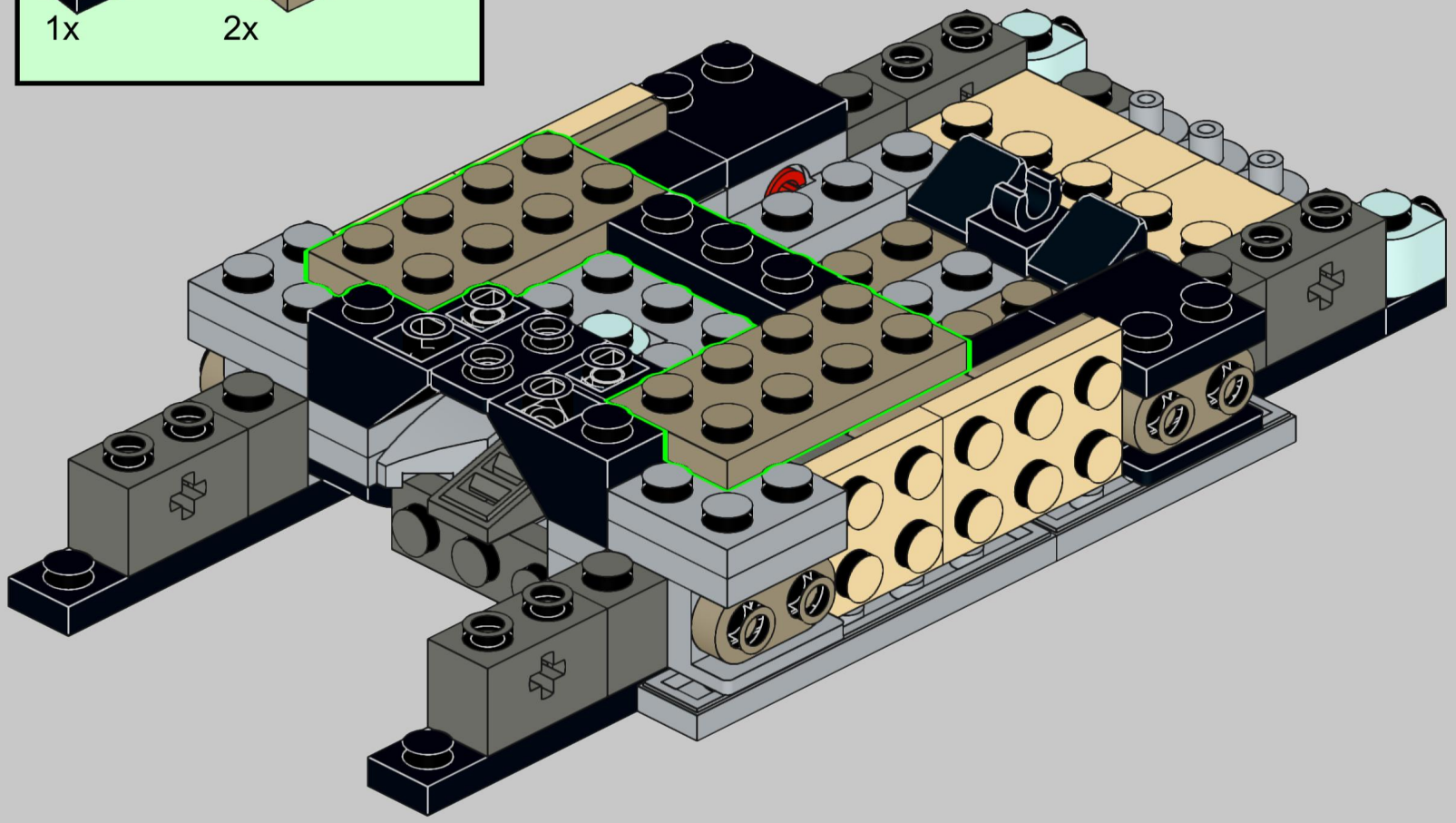

36

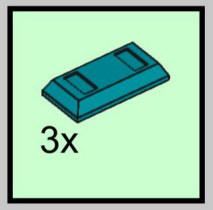

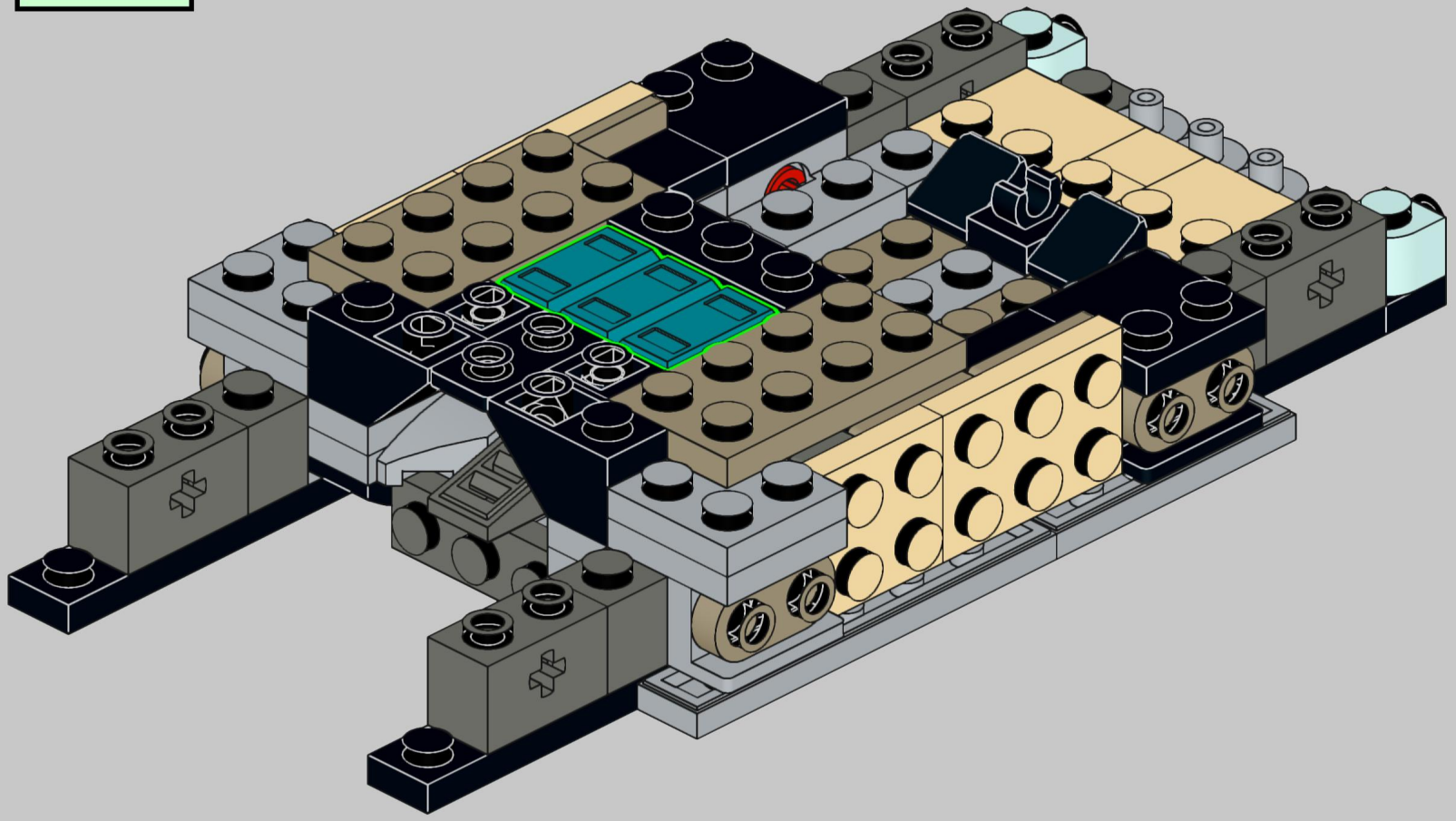

37

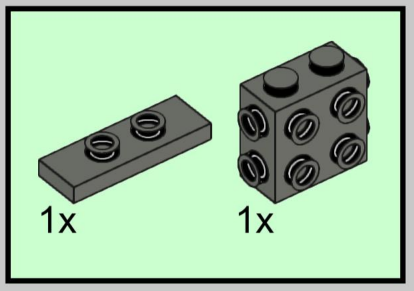

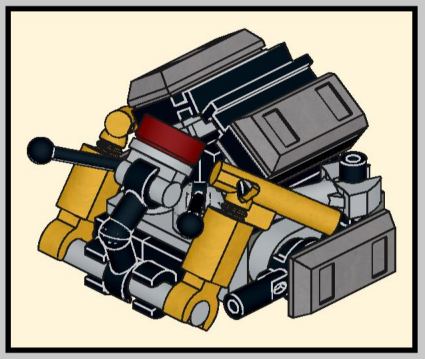

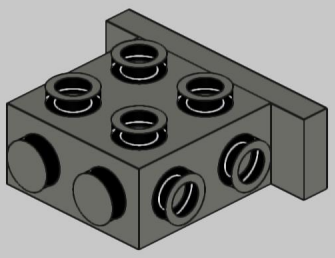

38

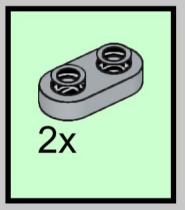

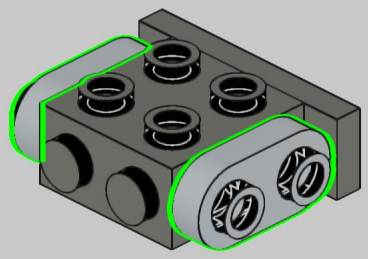

39

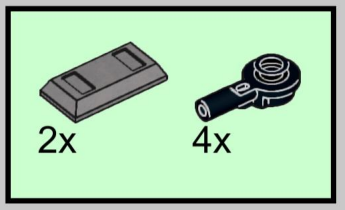

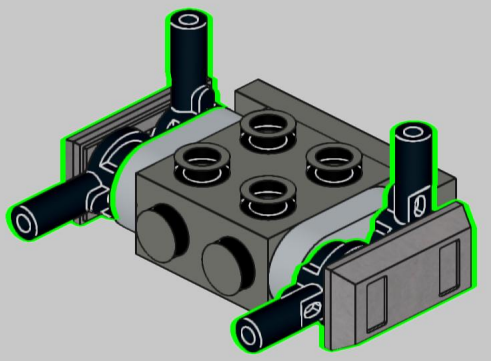

40

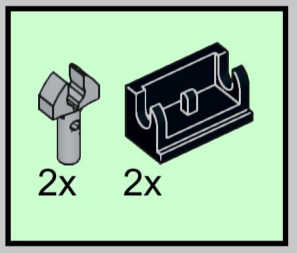

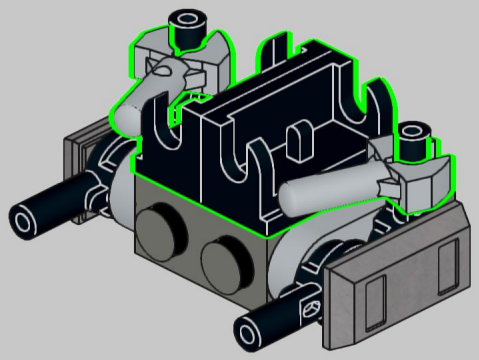

41

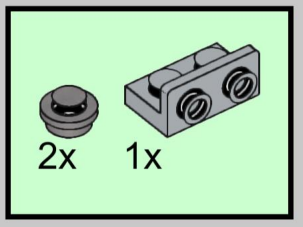

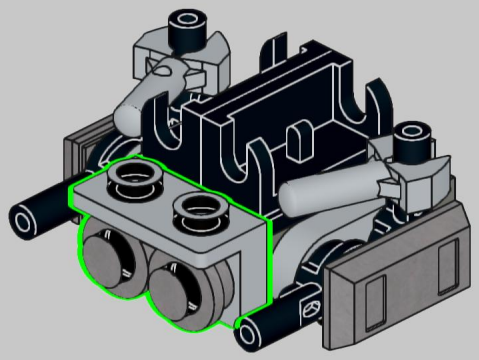

42

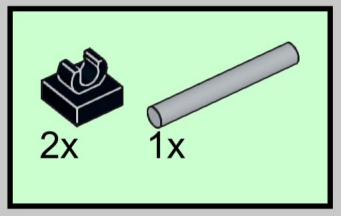

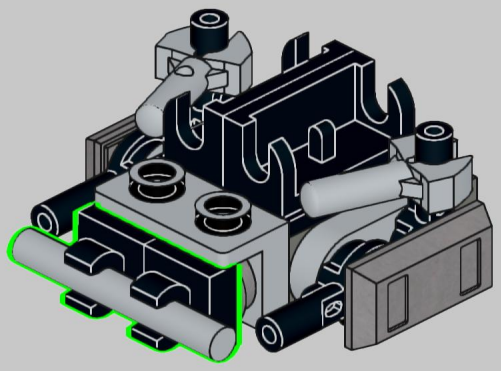

43

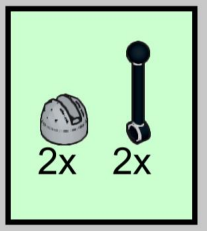

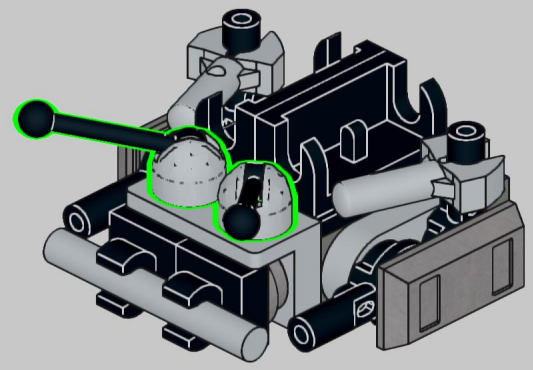

44

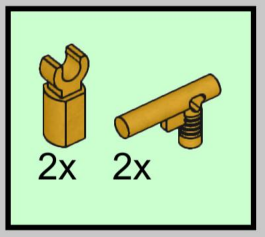

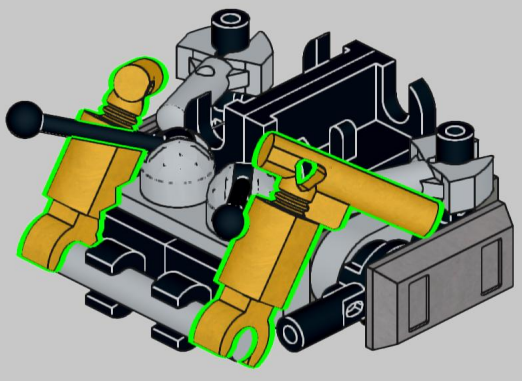

45

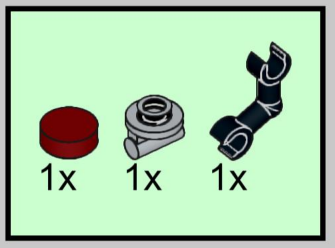

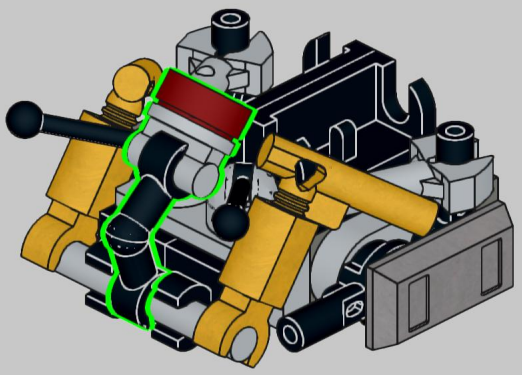

46

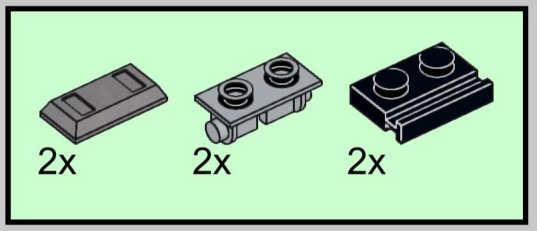

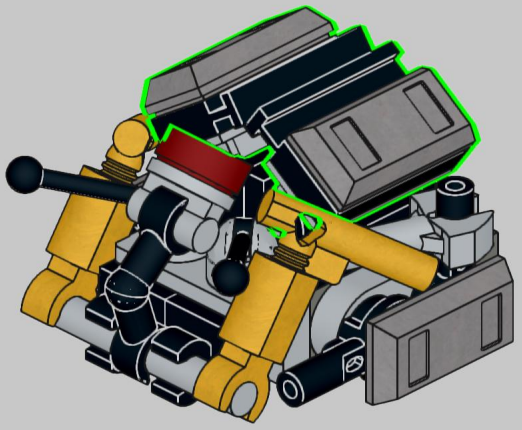

47

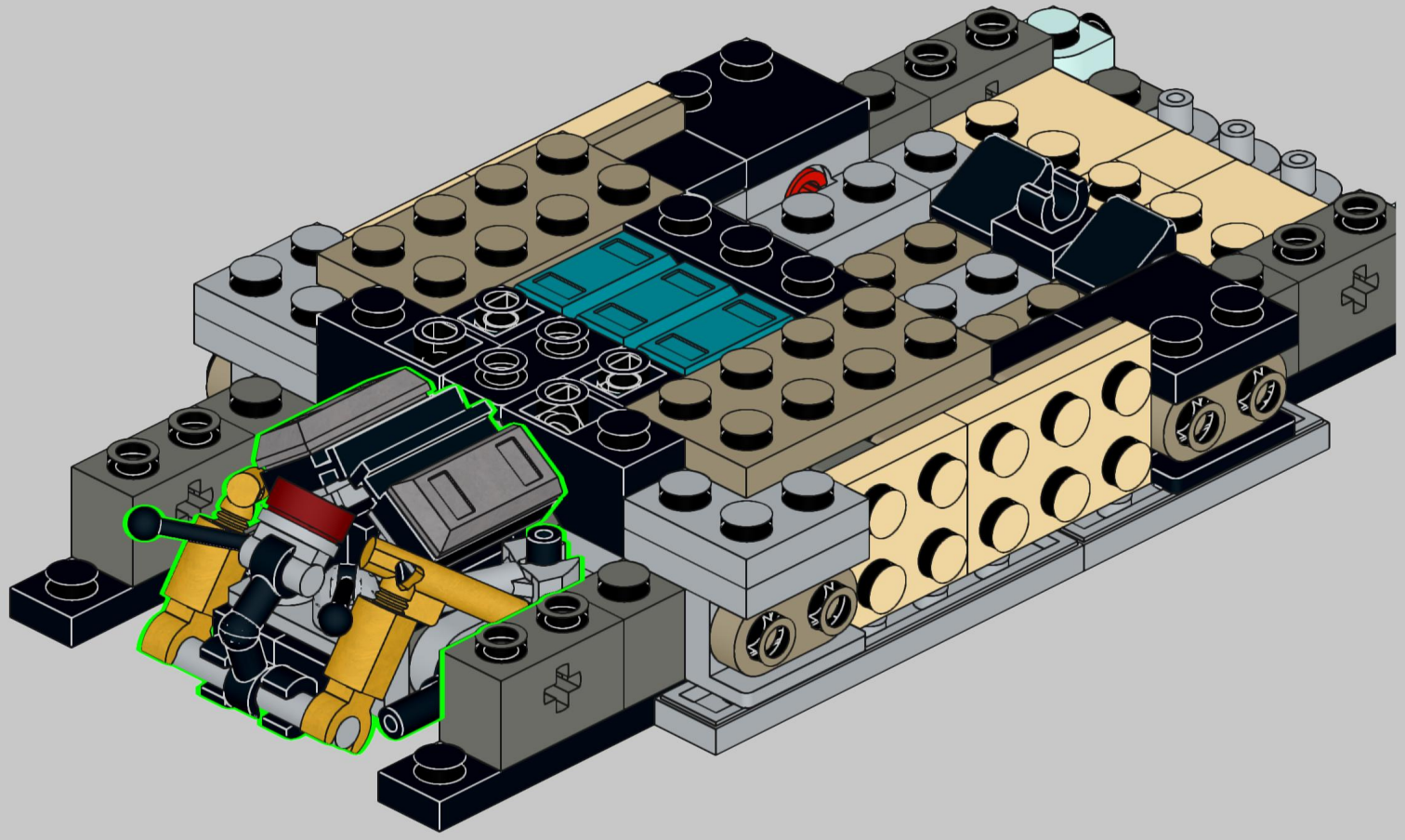

48

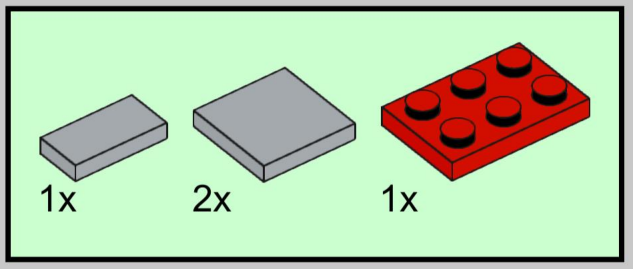

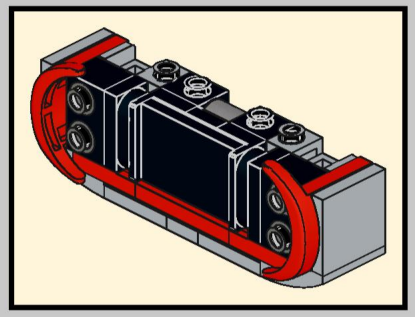

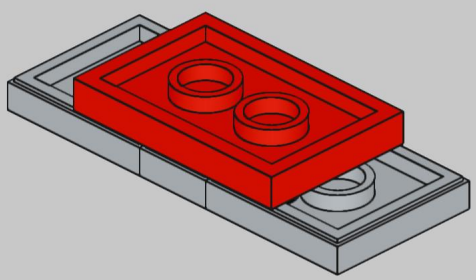

49

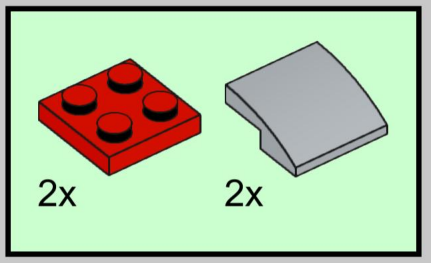

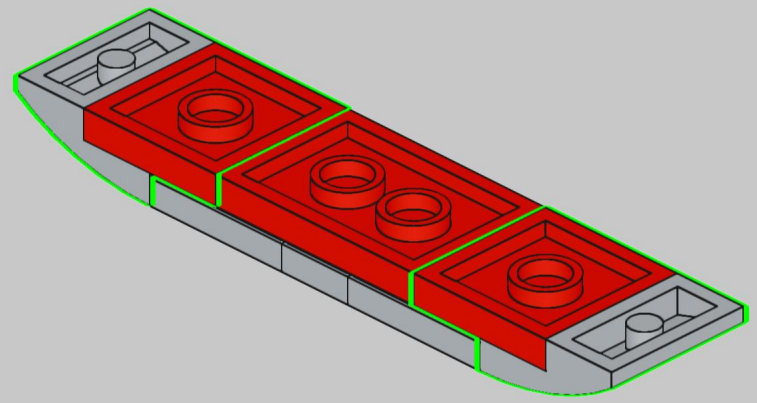

50

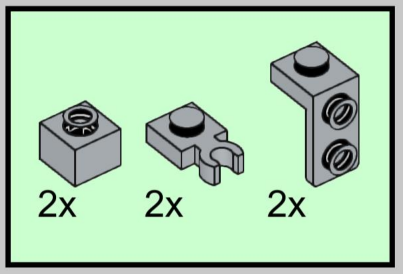

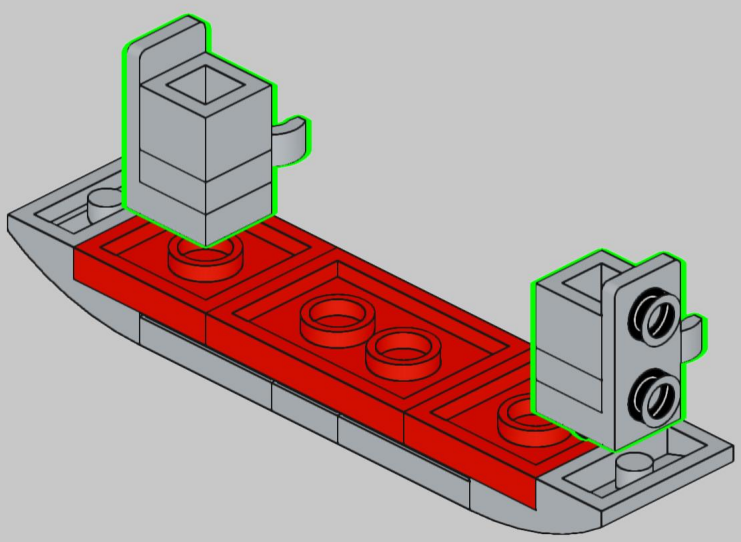

51

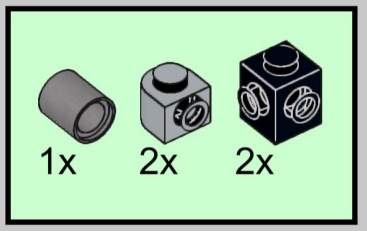

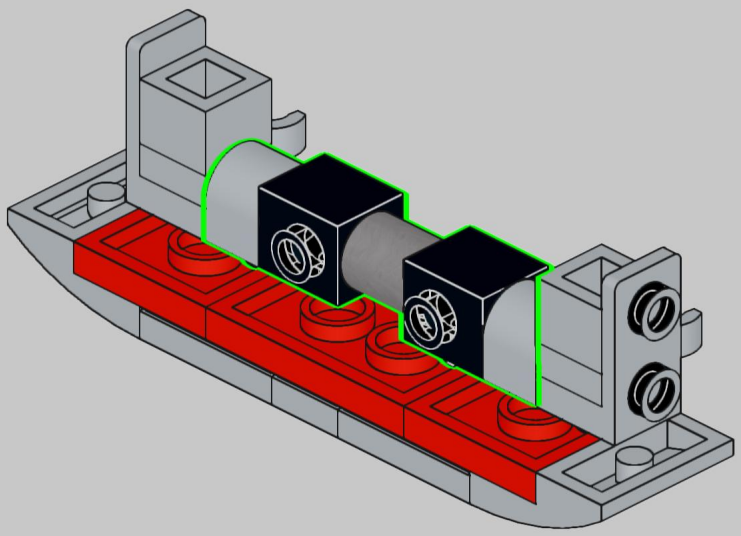

52

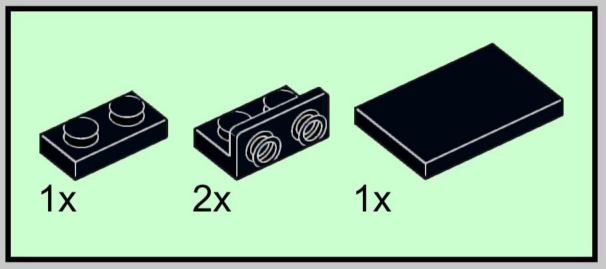

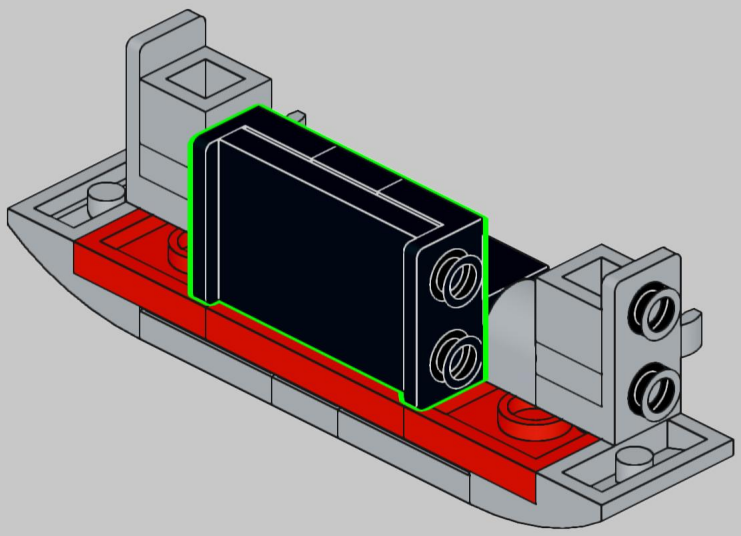

53

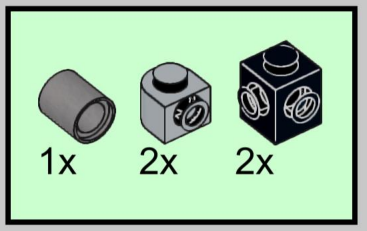

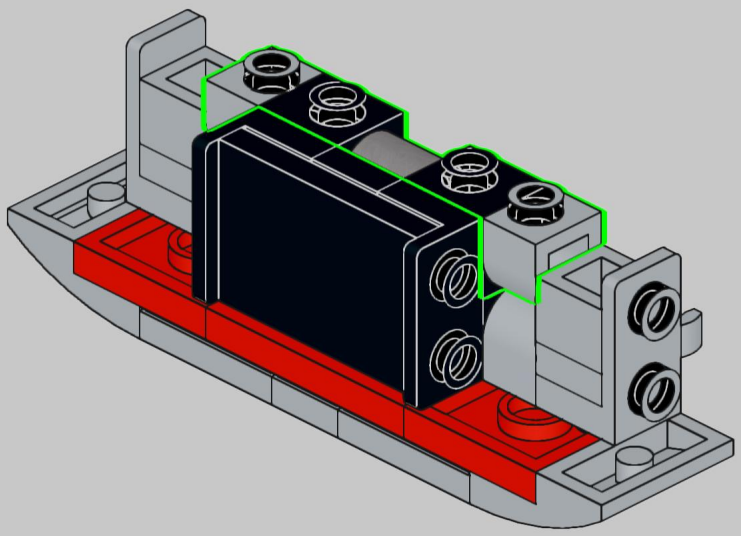

54

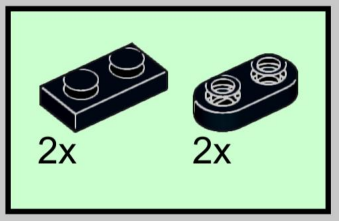

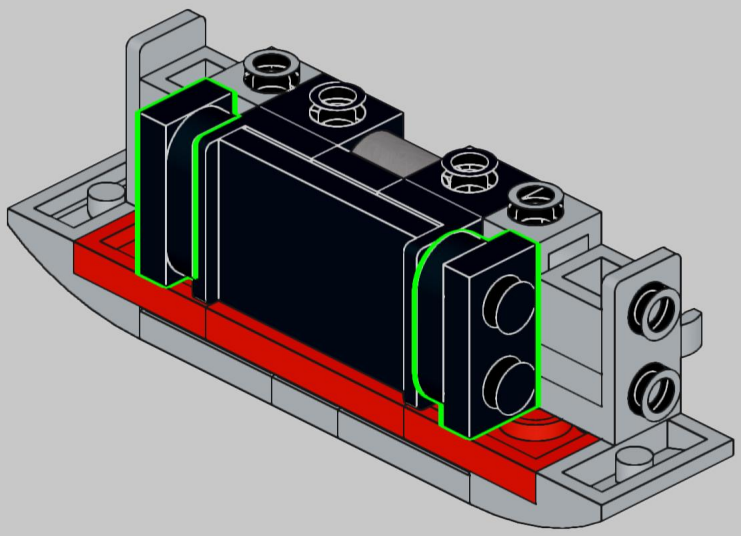

55

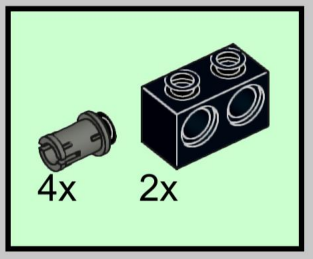

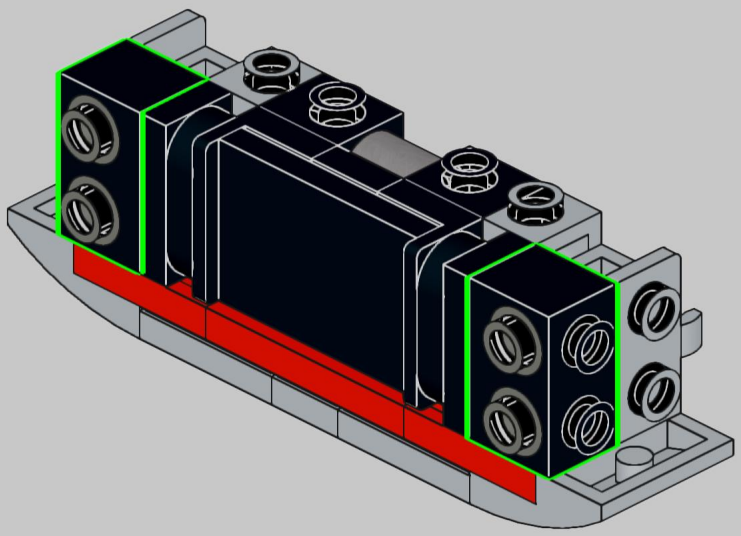

56

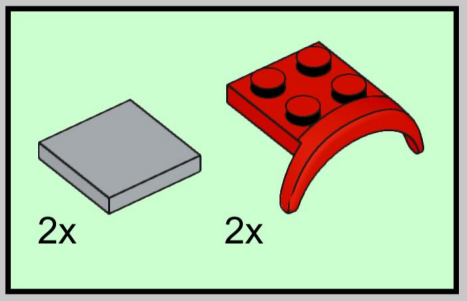

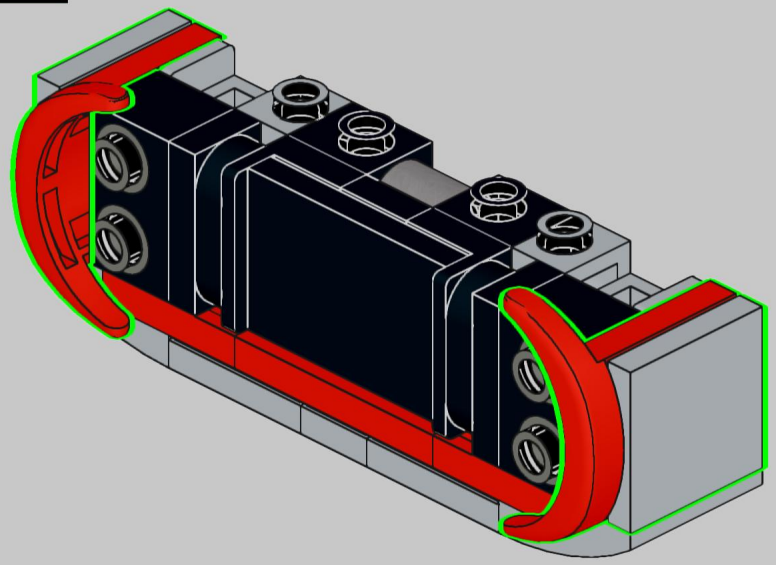

57

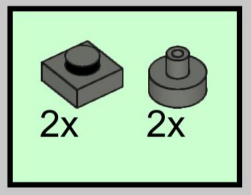

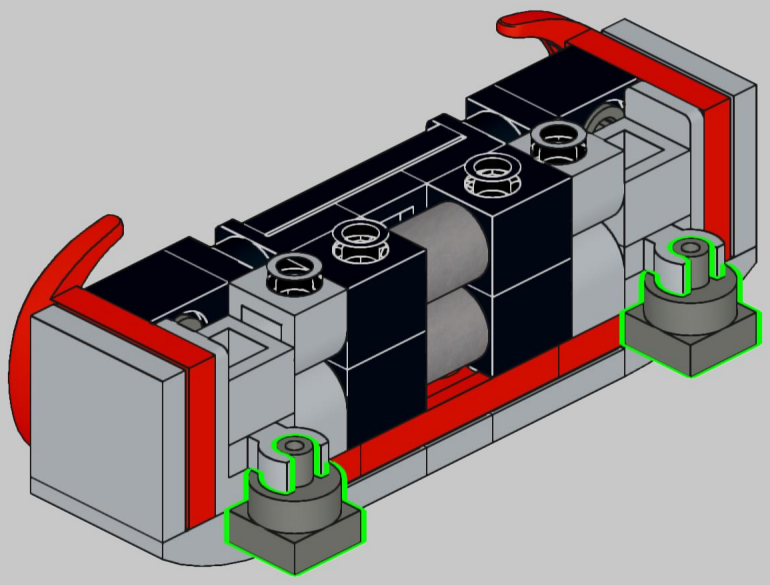

58

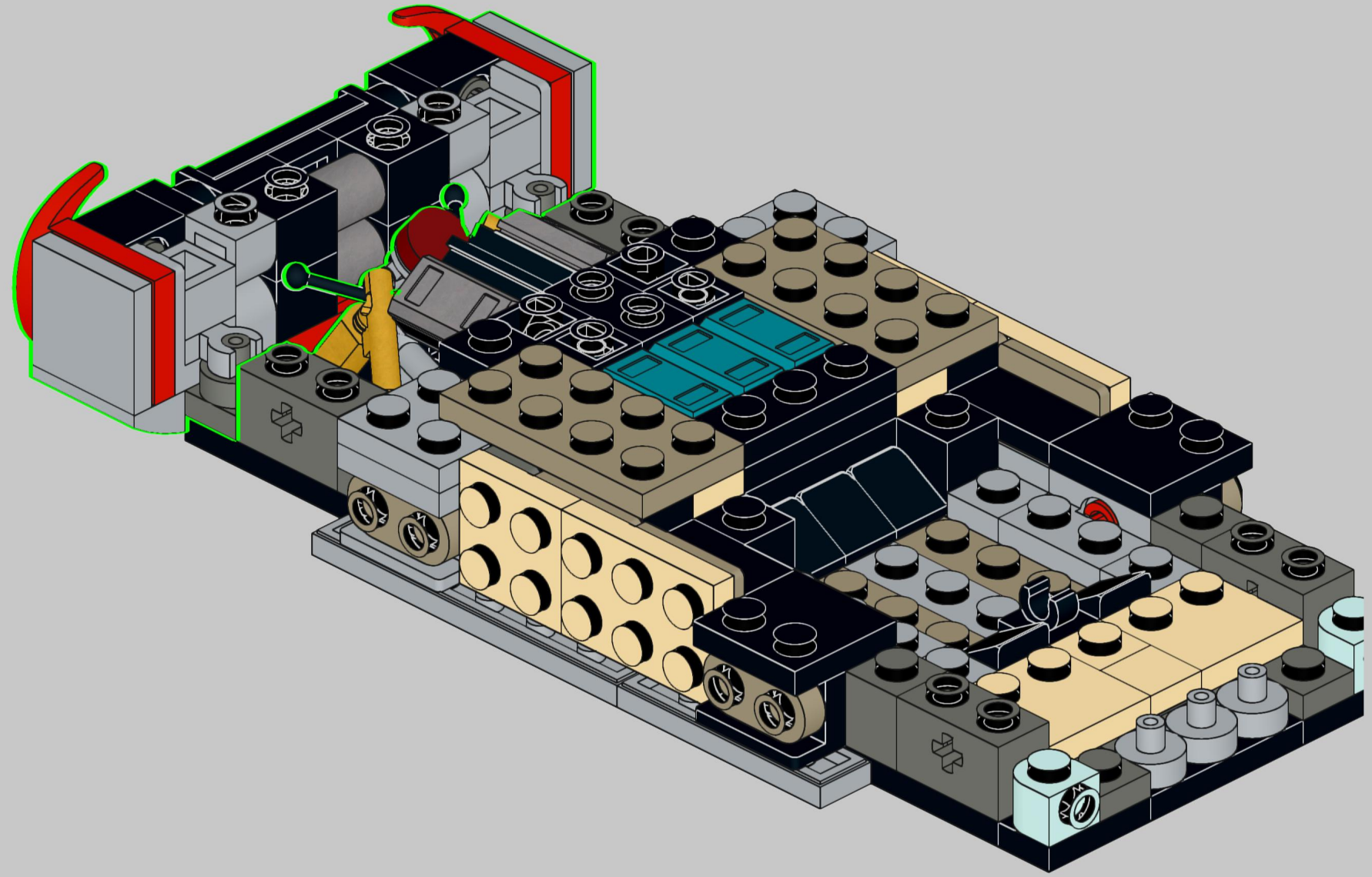

59

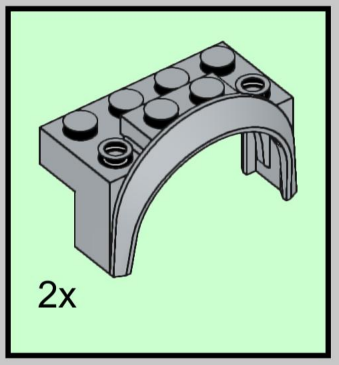

60

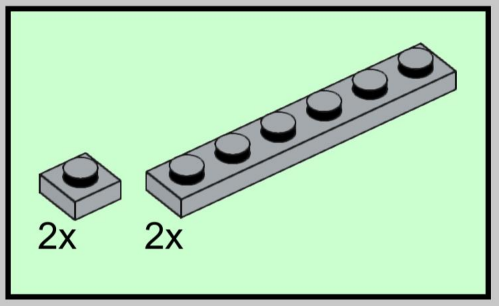

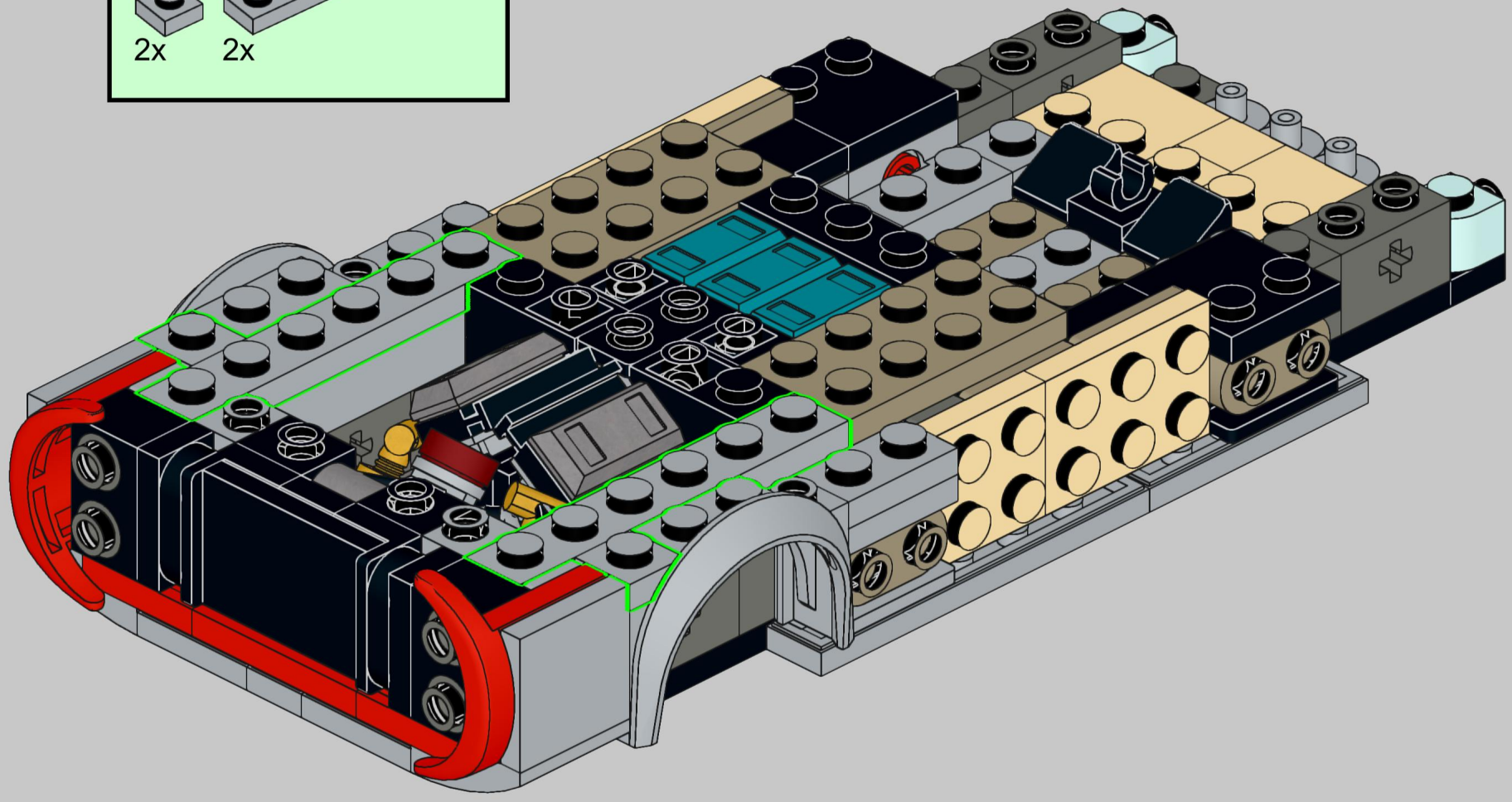

61

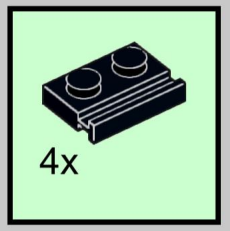

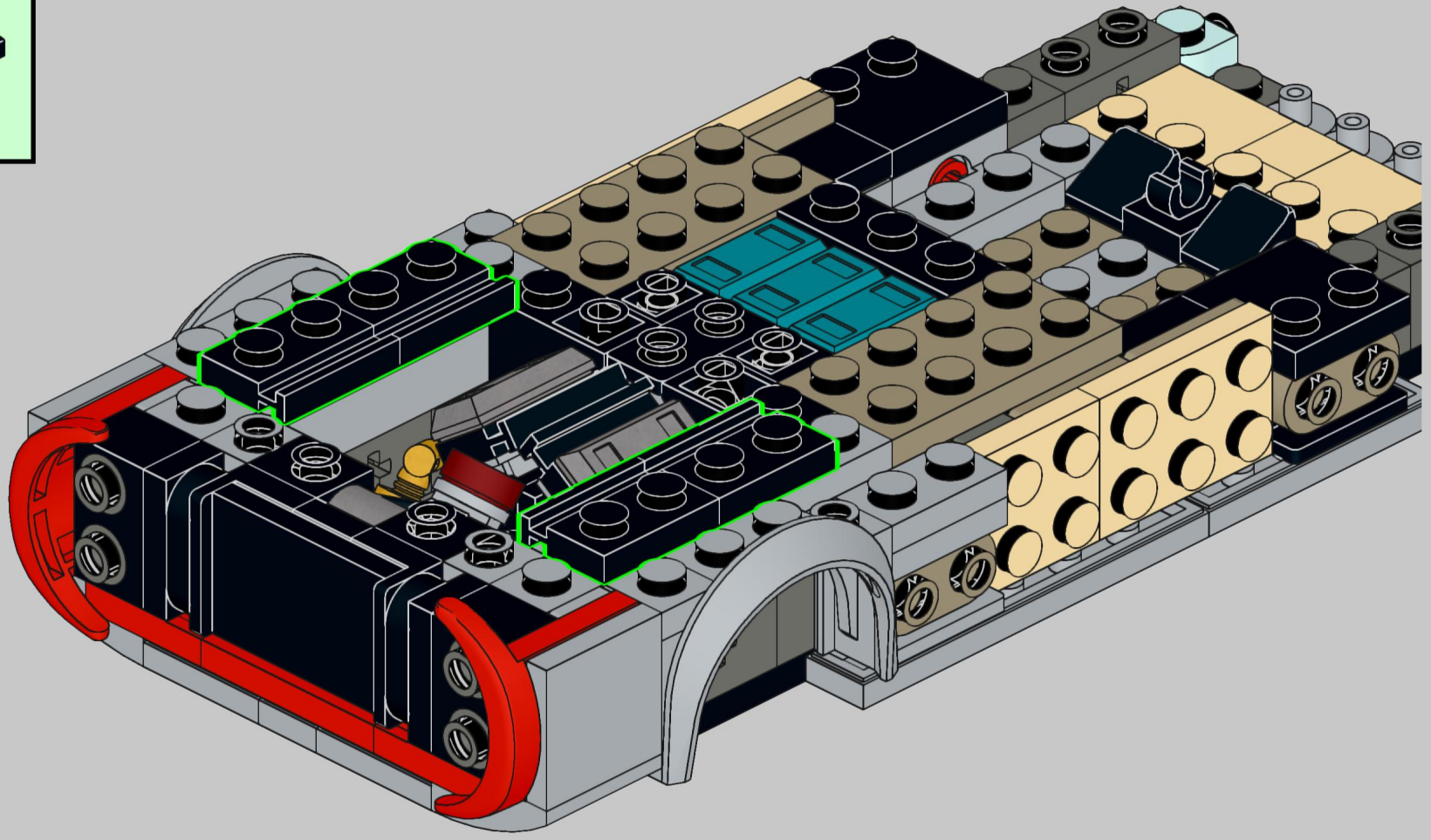

62

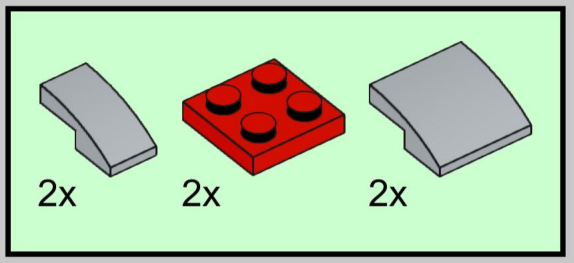

63

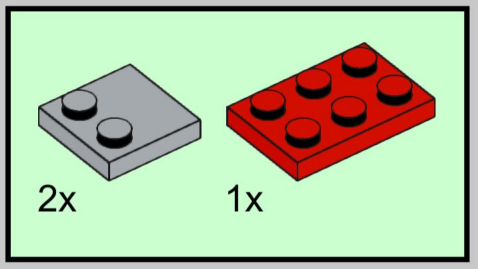

64

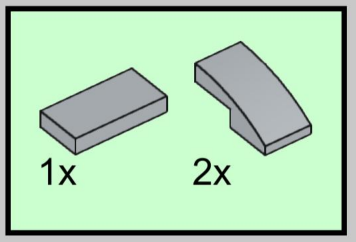

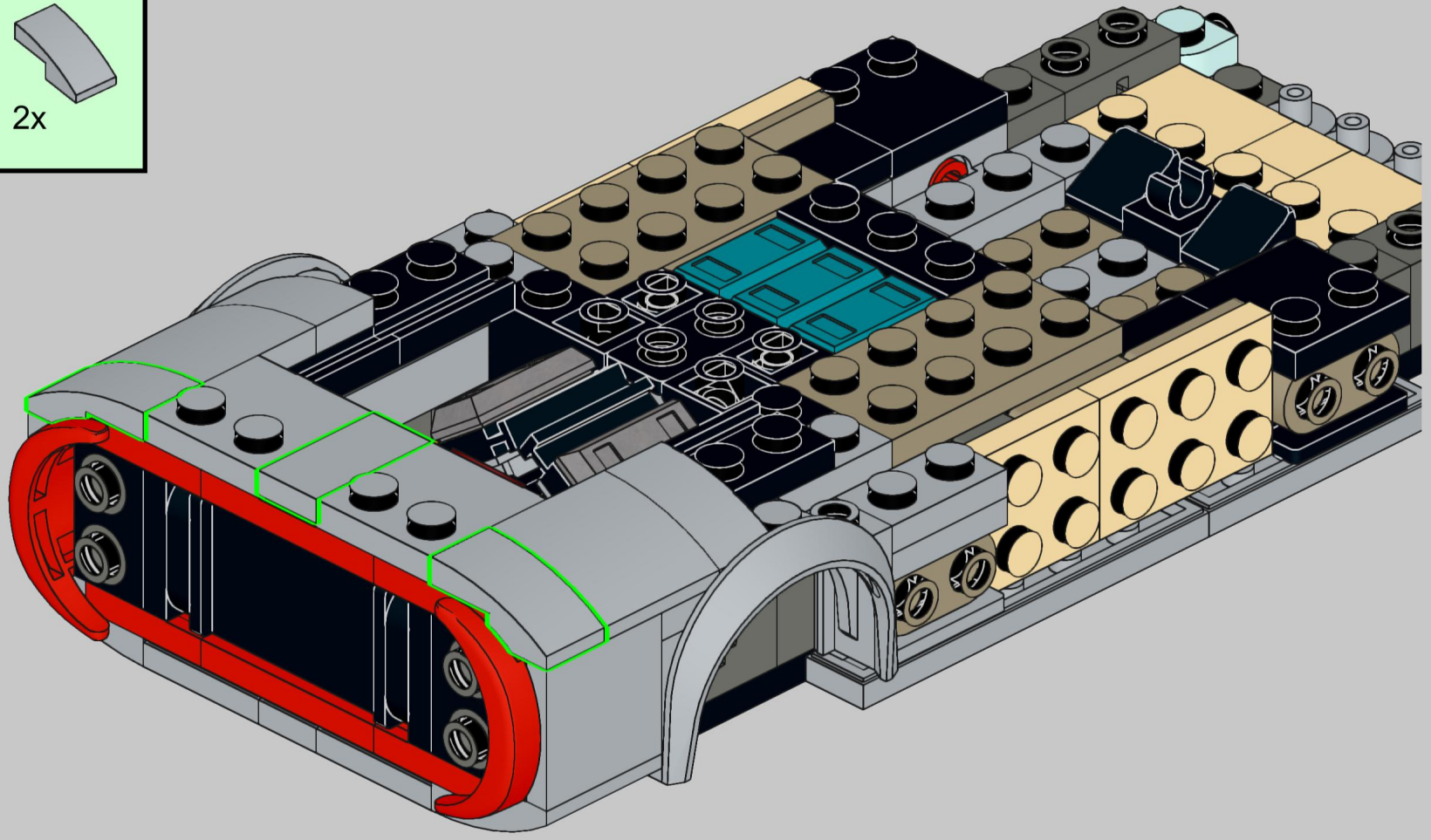

65



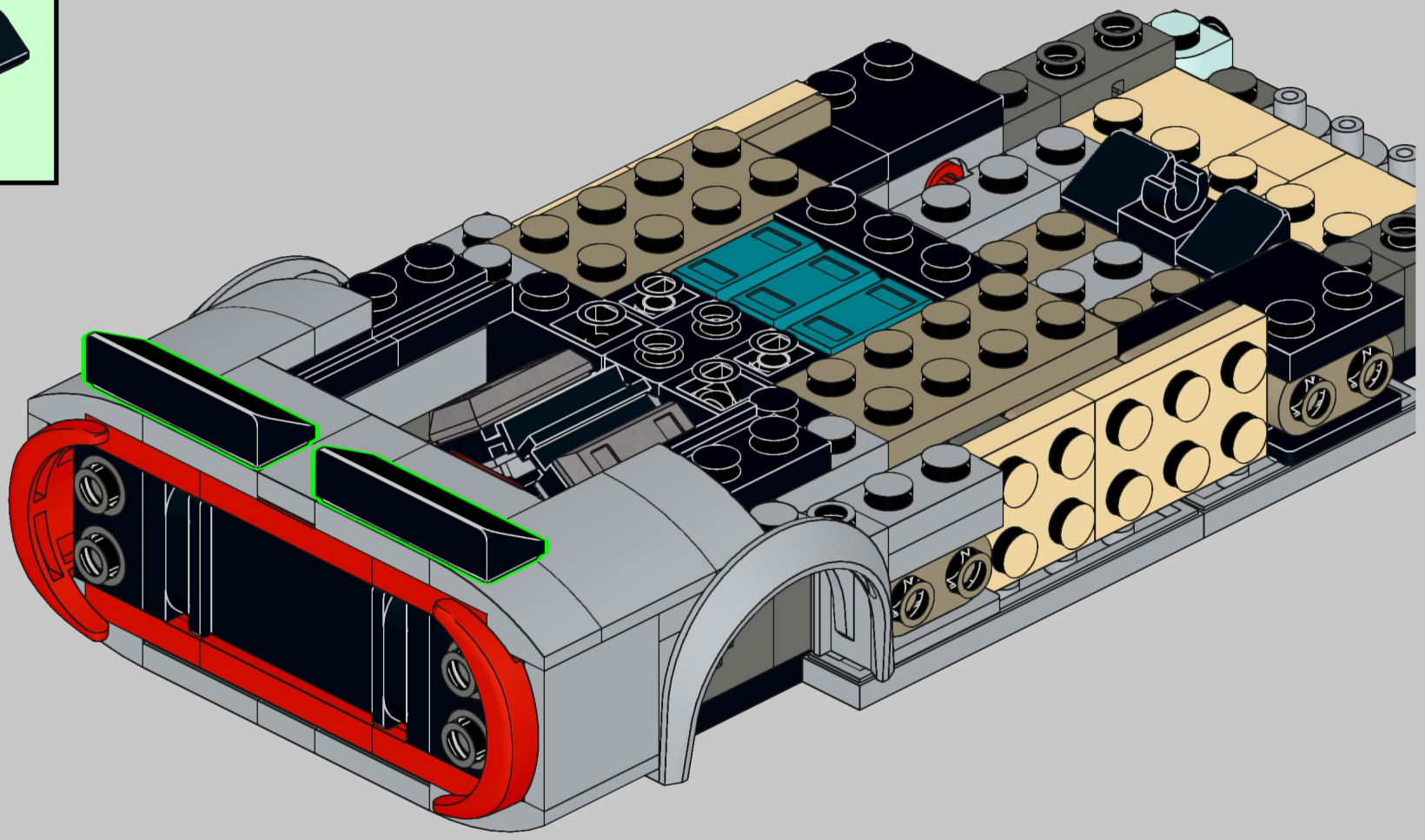

66

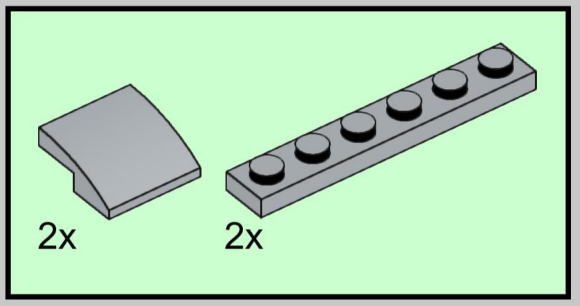

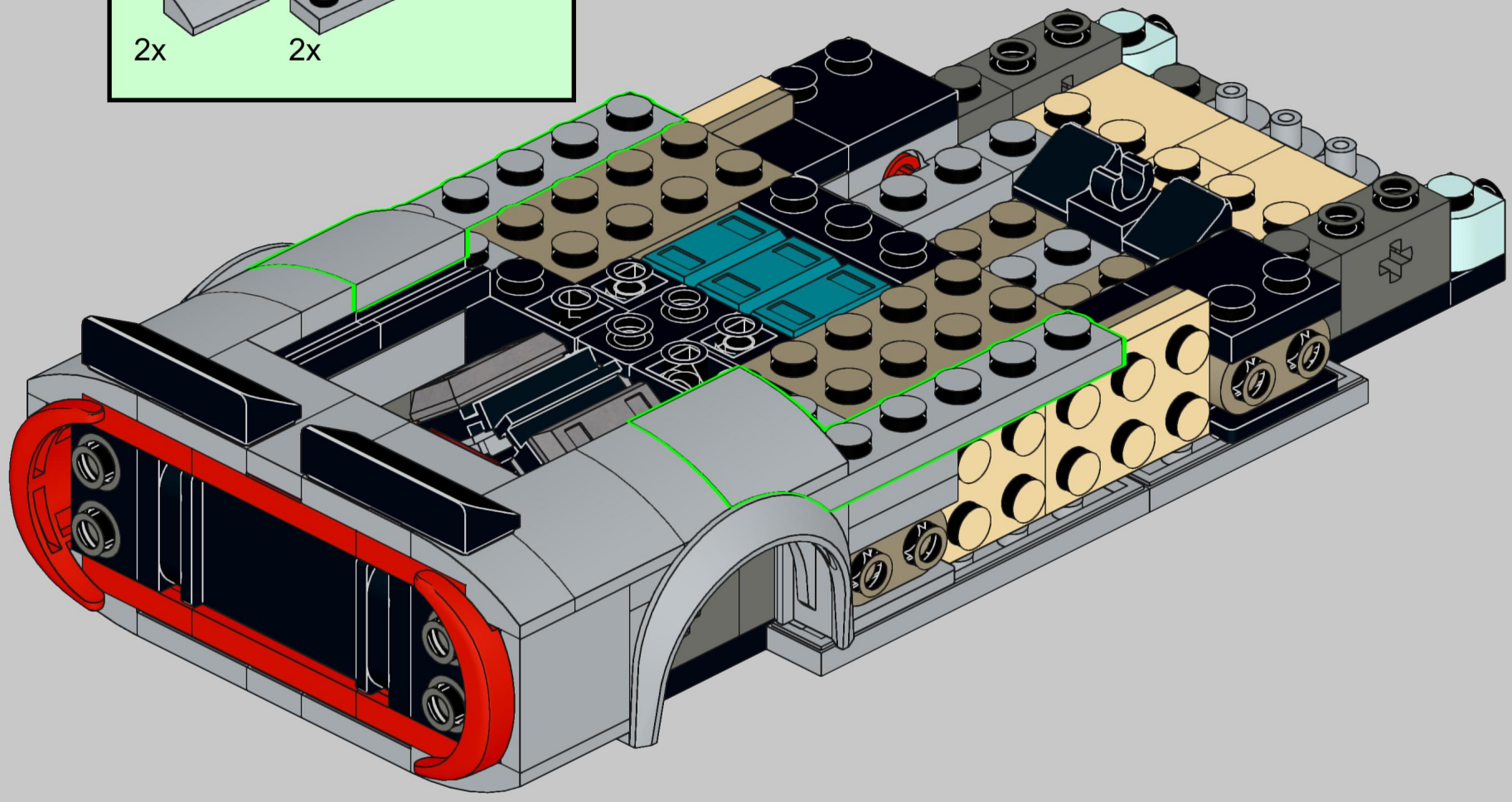

67

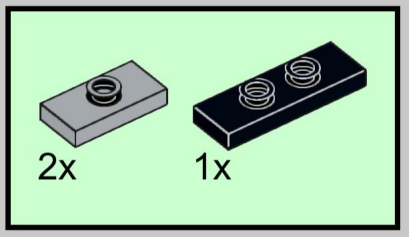

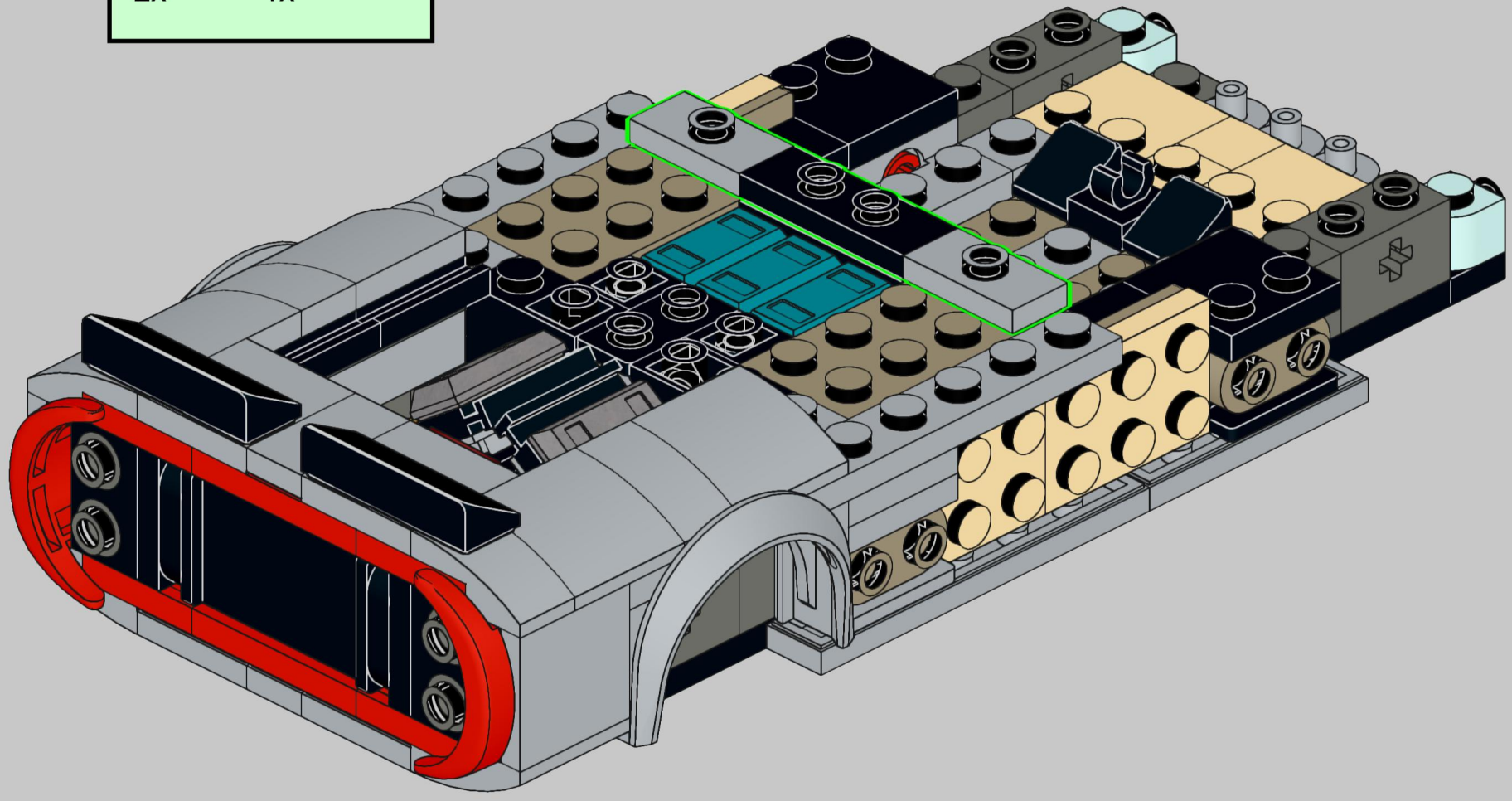

68

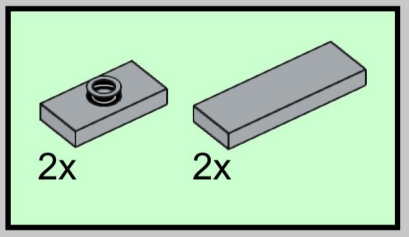

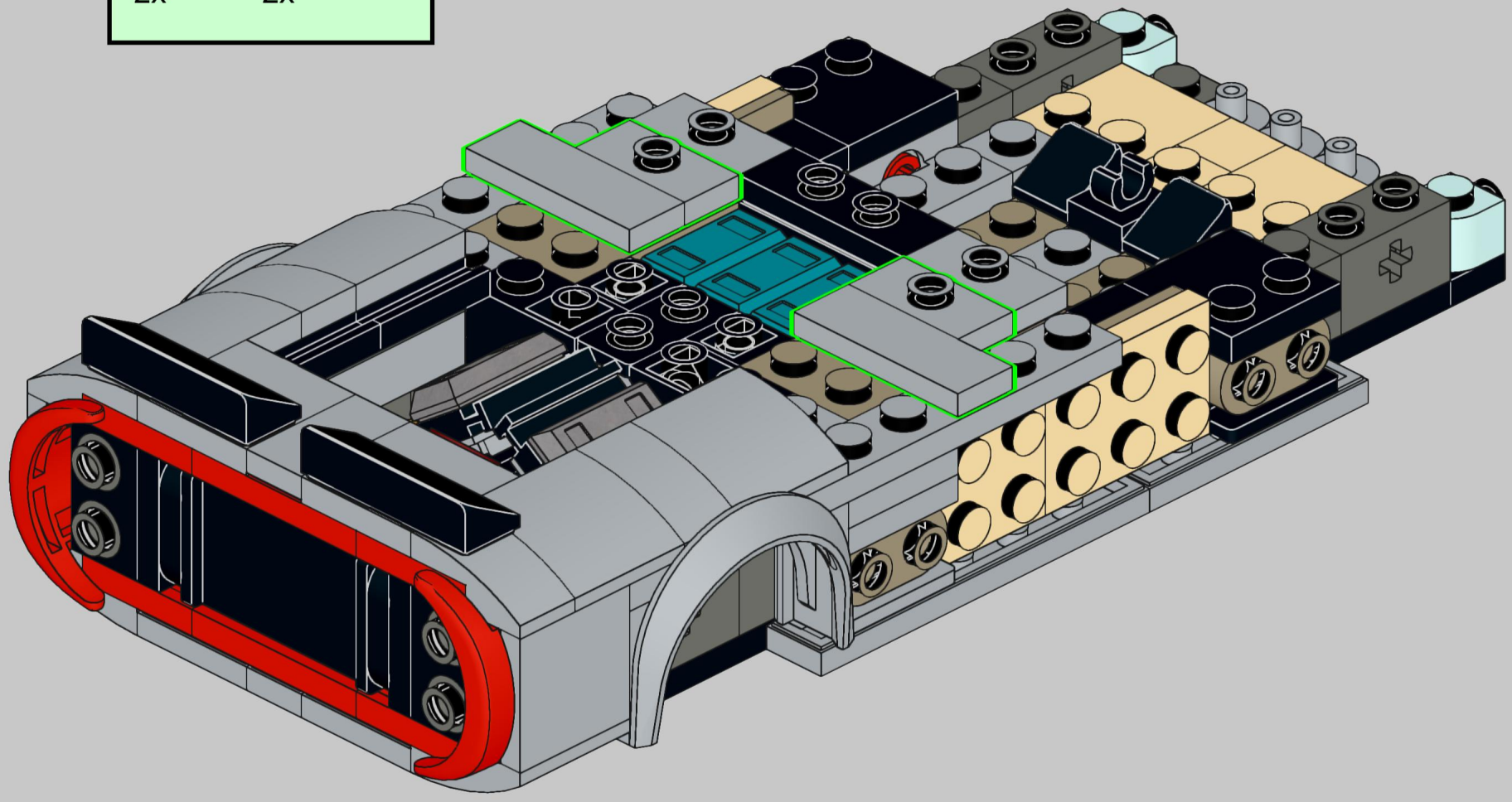

69

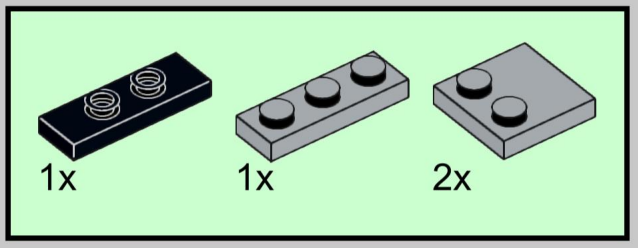

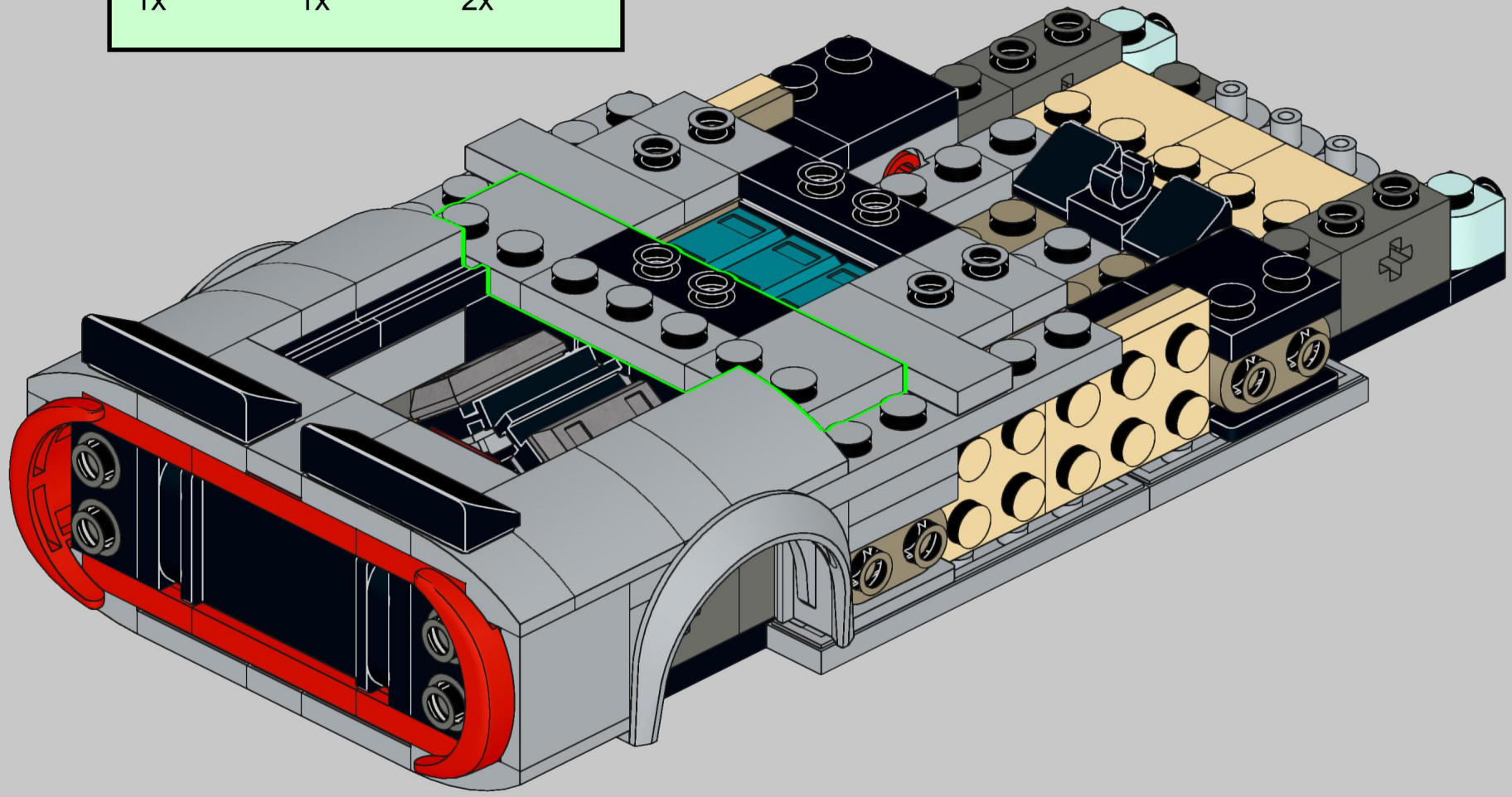

70

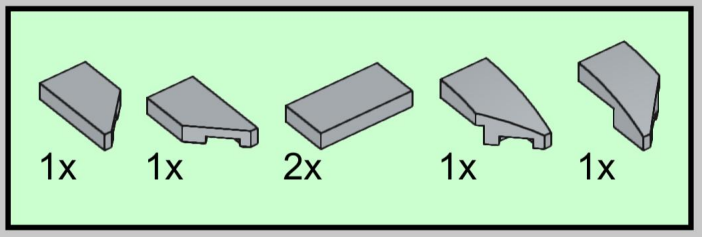

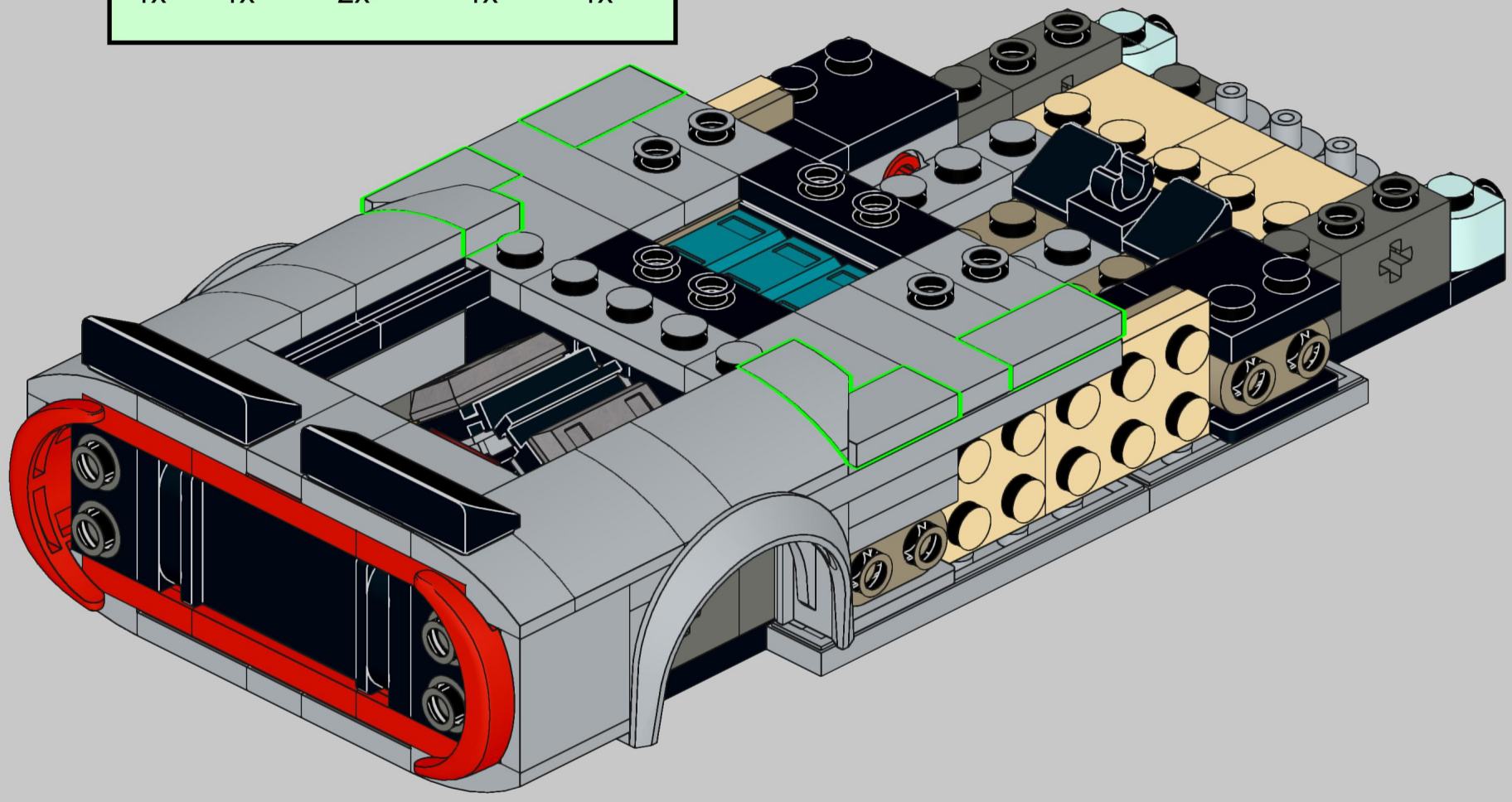

71

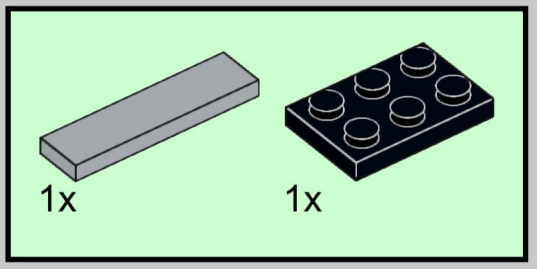

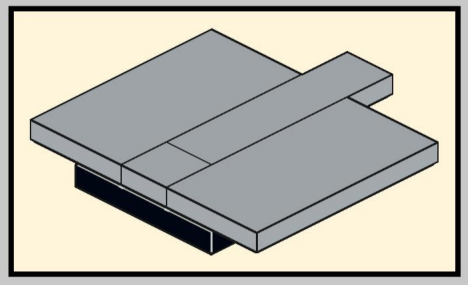

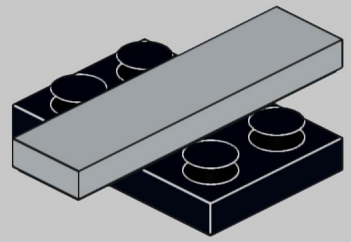

72

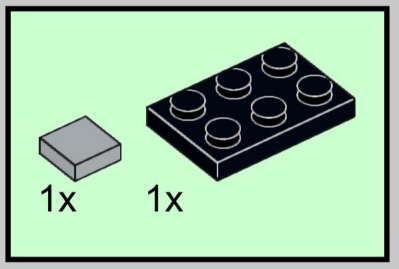

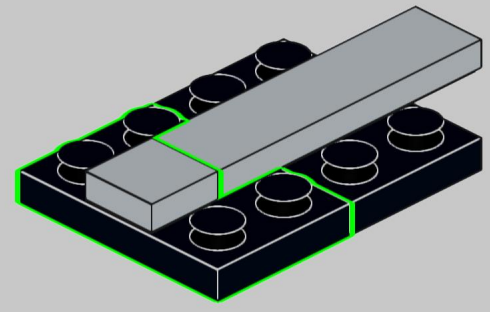

73

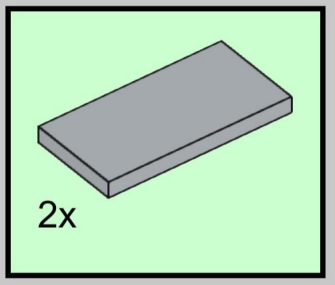

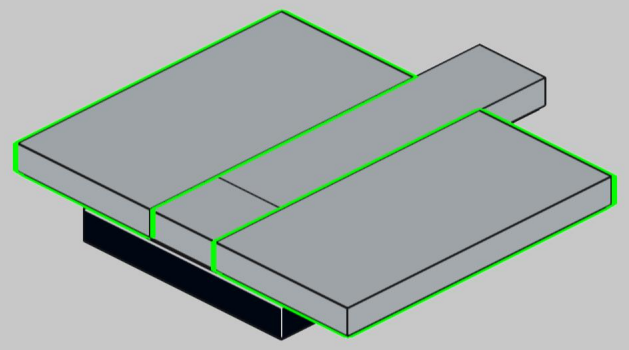

74

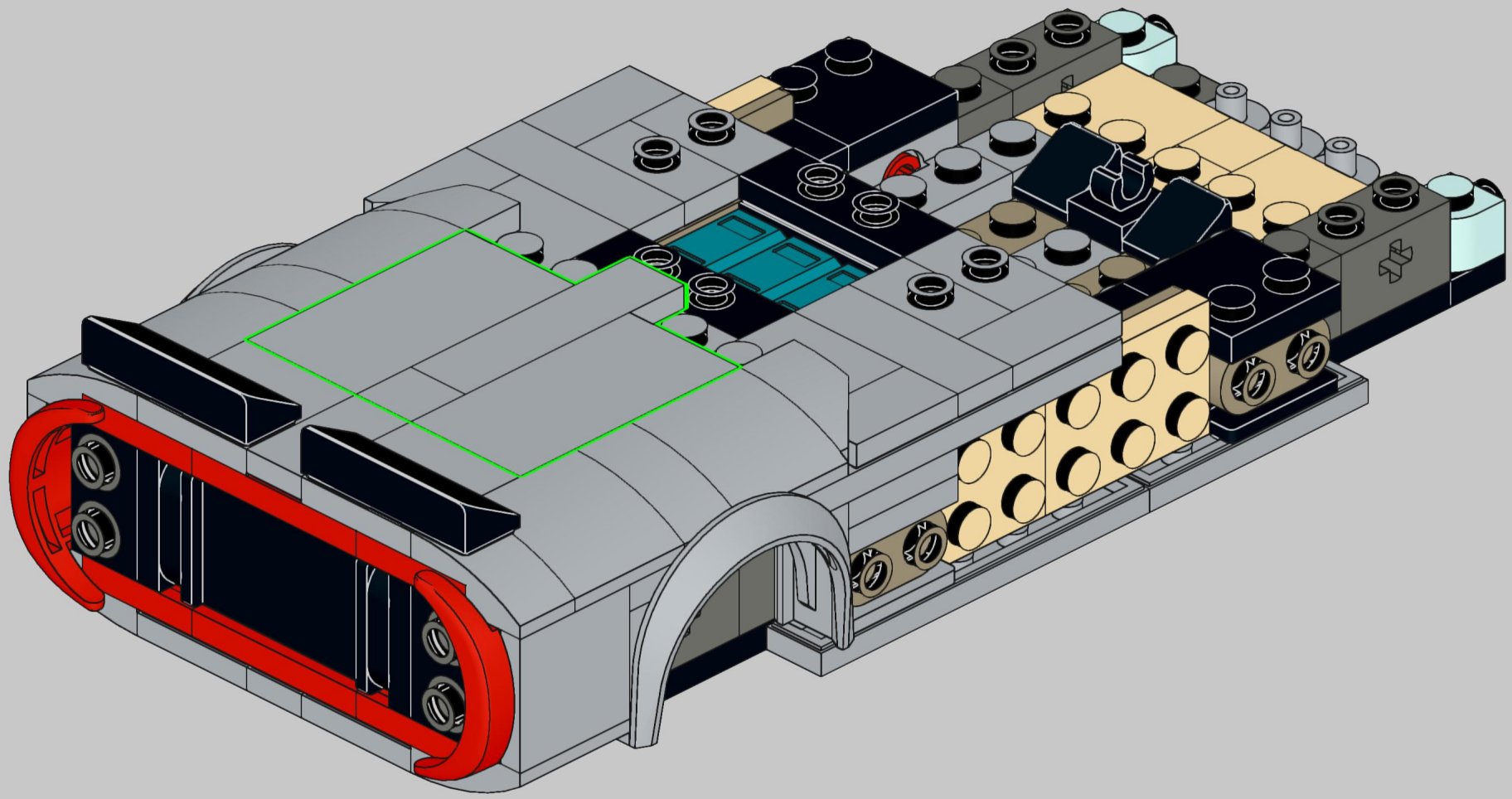

75

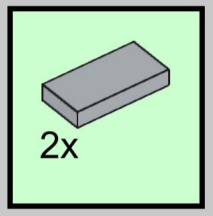

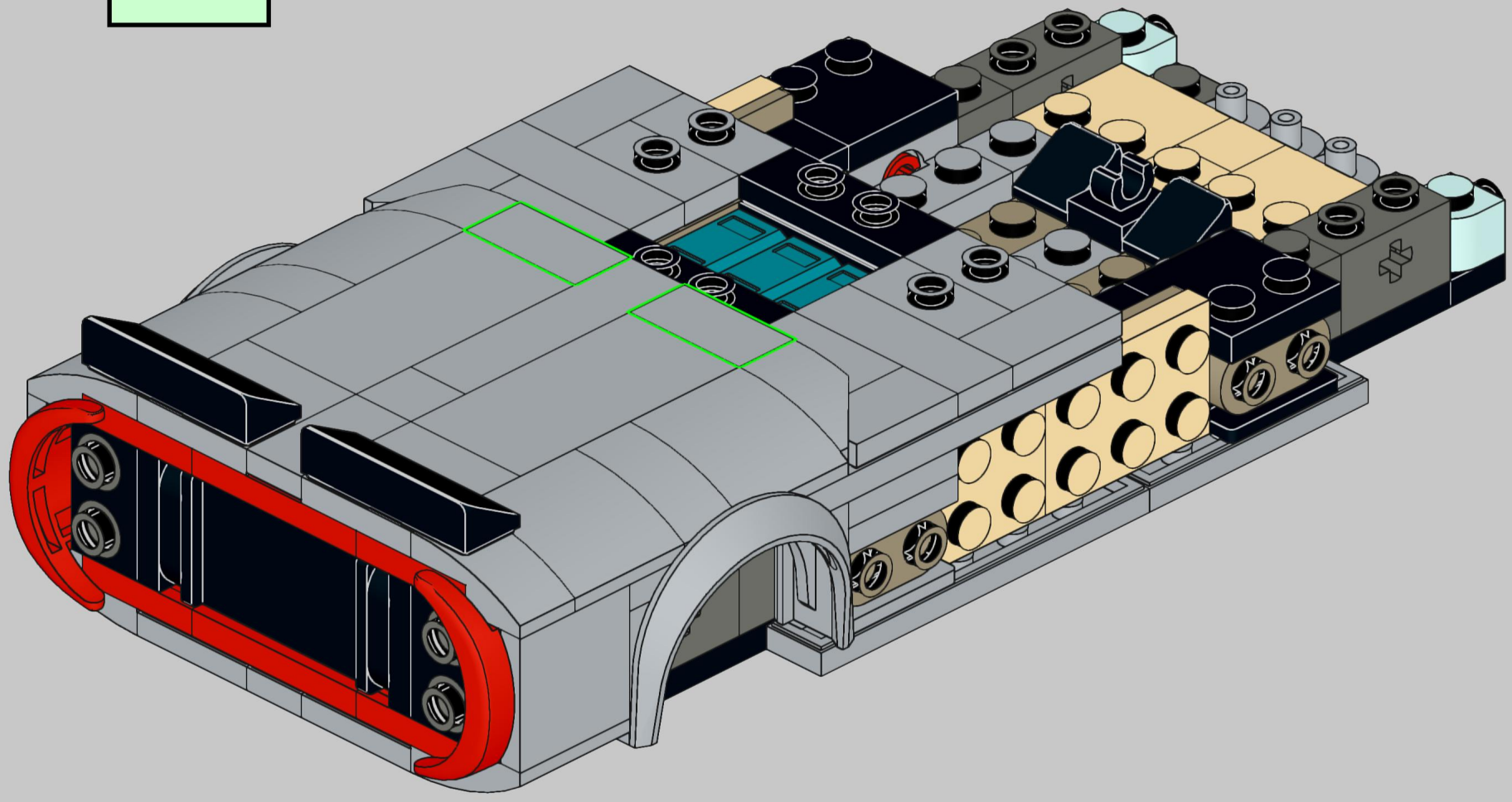

76

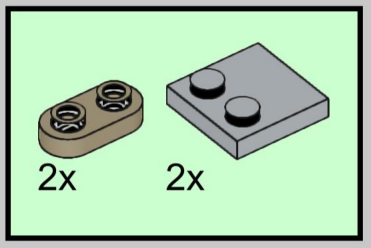

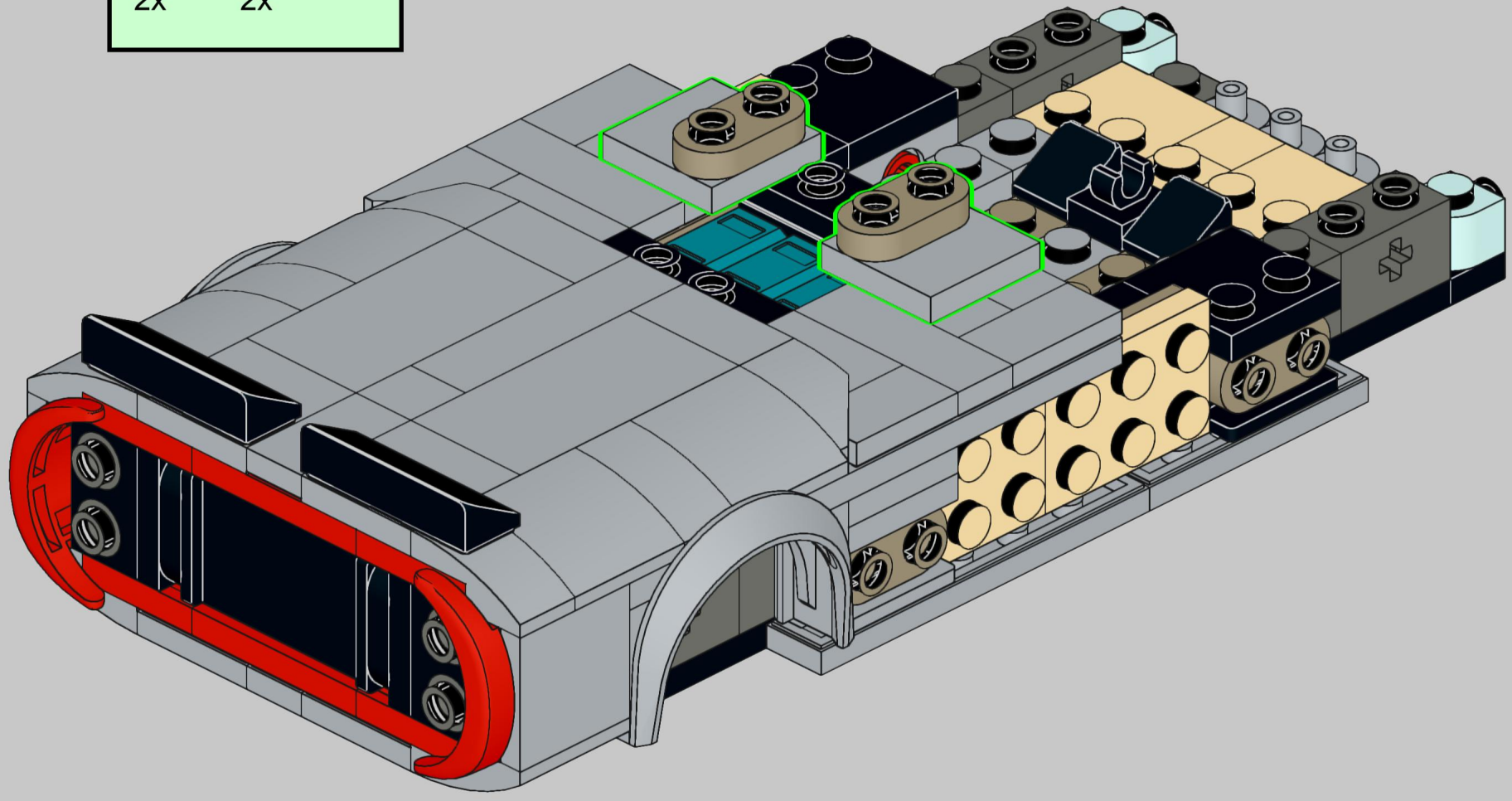

77

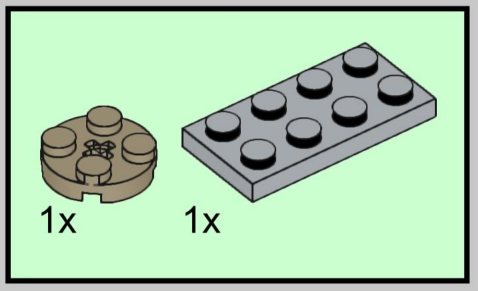

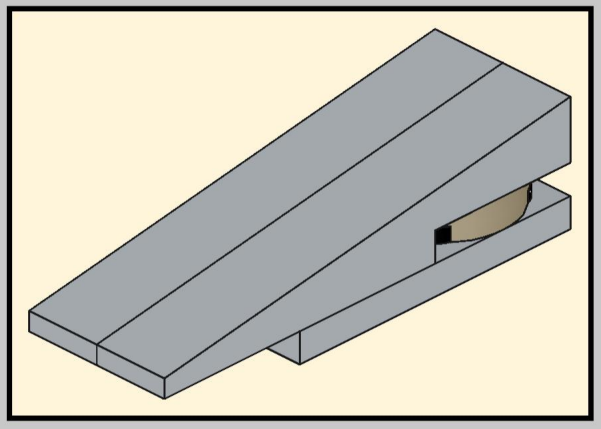

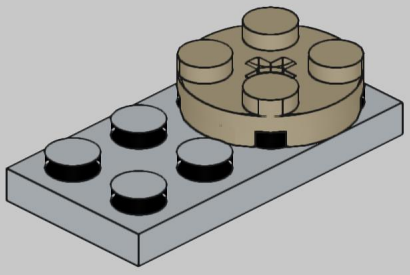

78

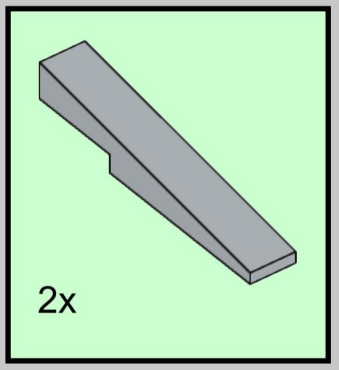

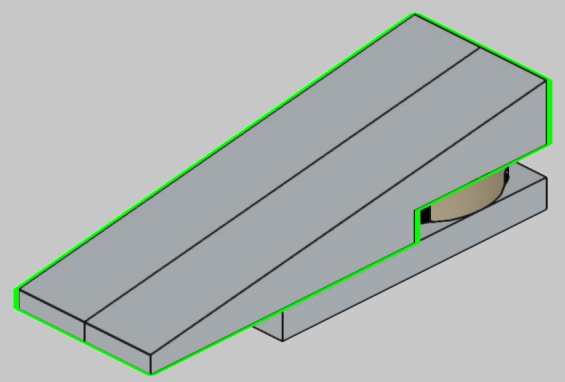

79

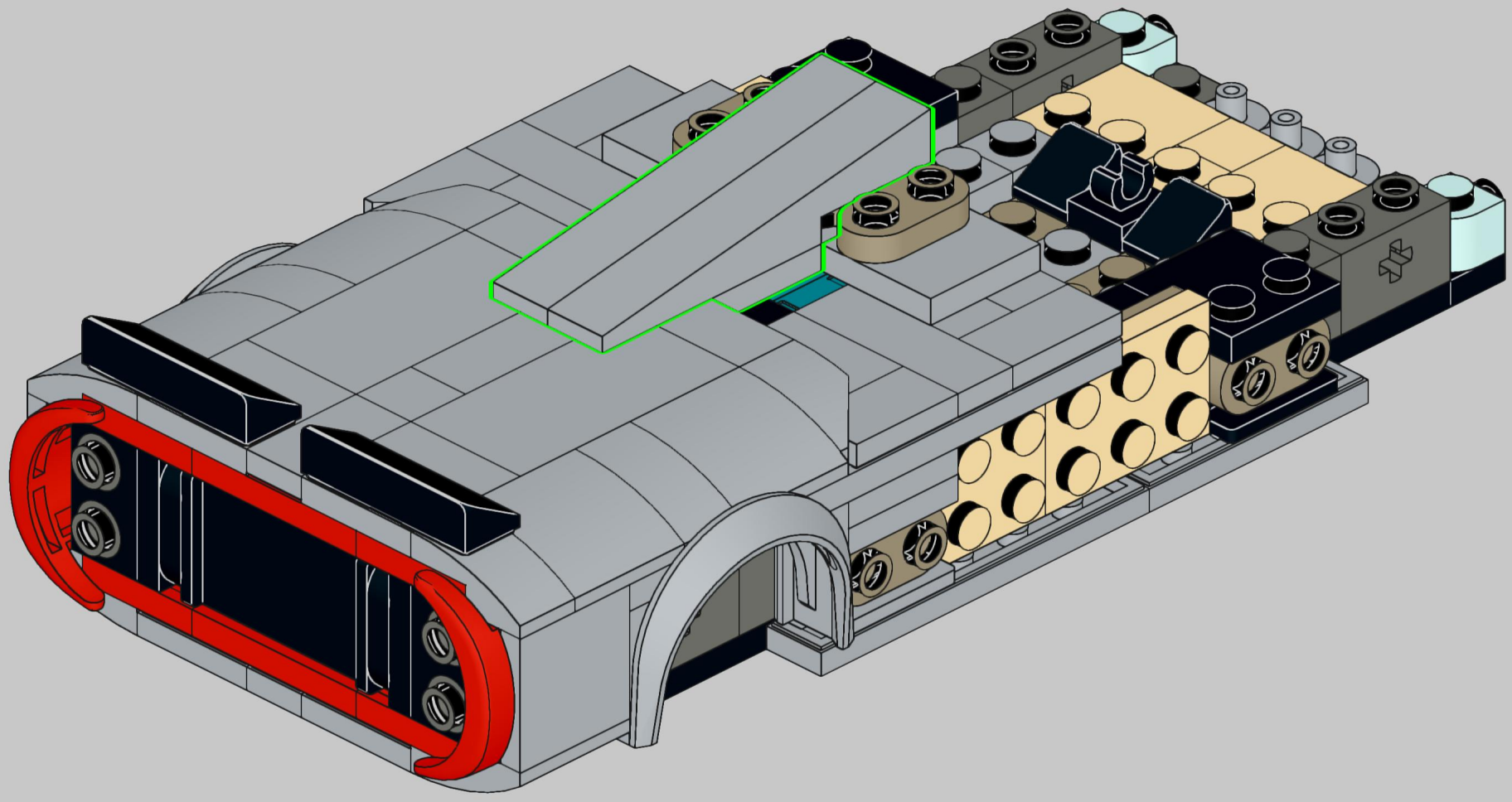

80

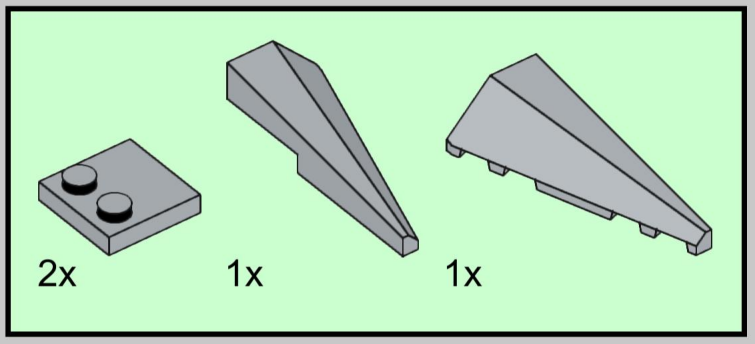

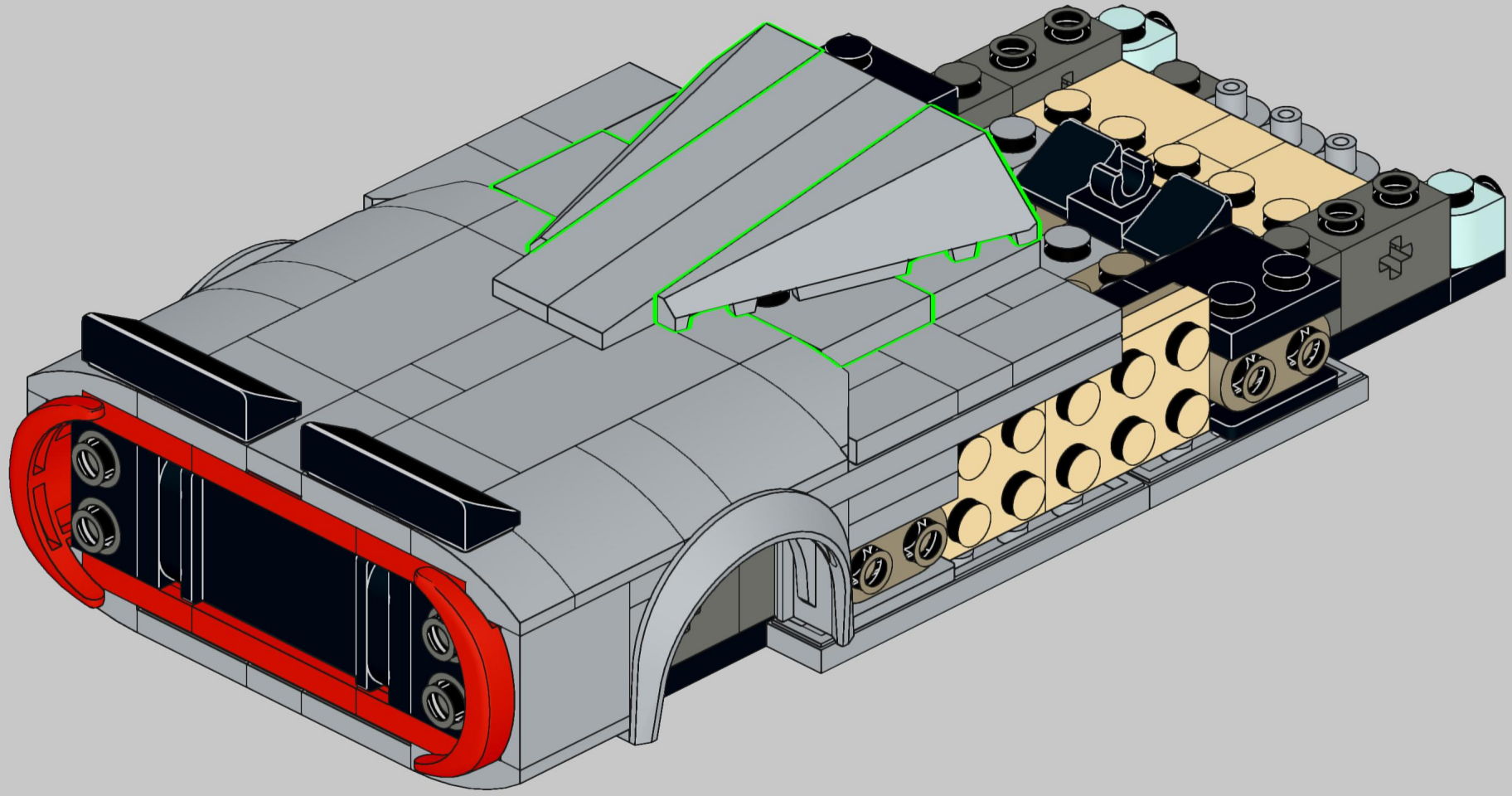

81

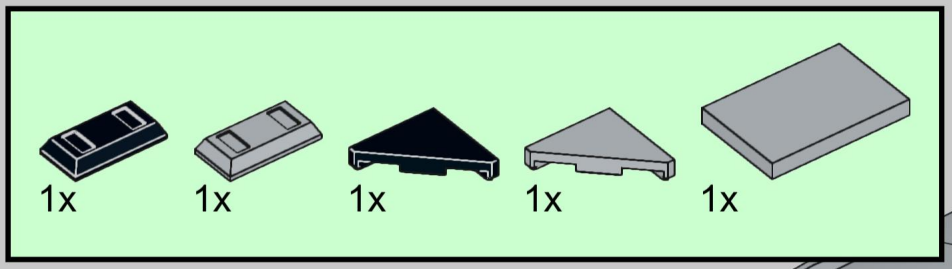

82

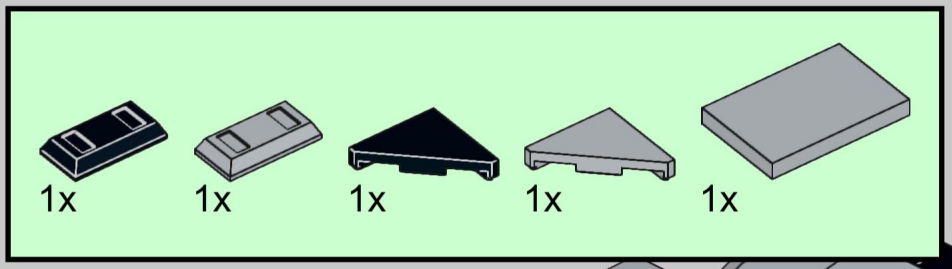

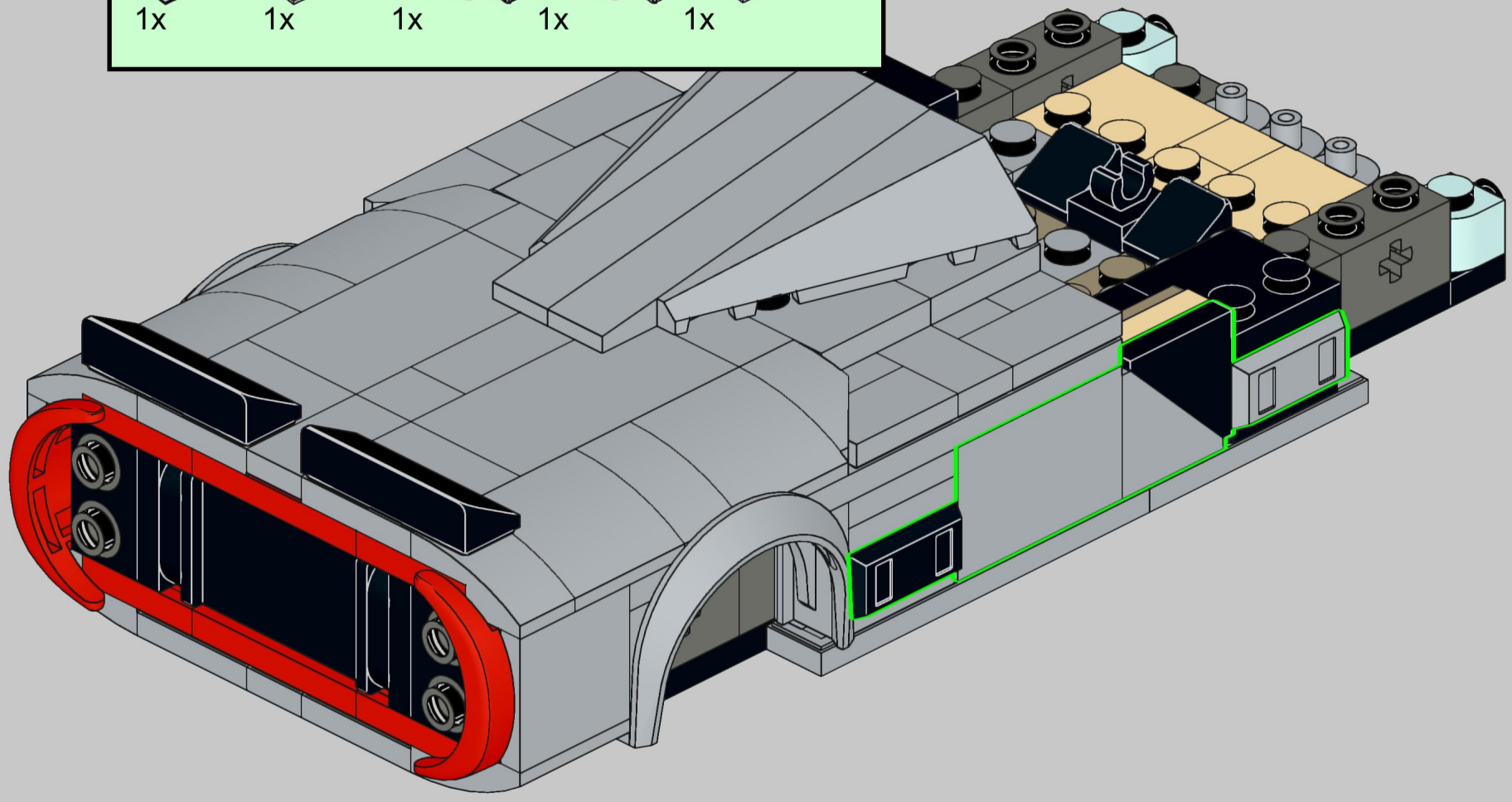

83

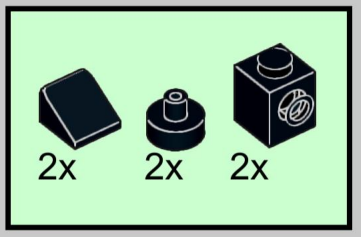

84

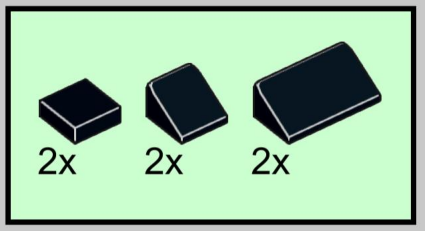

85

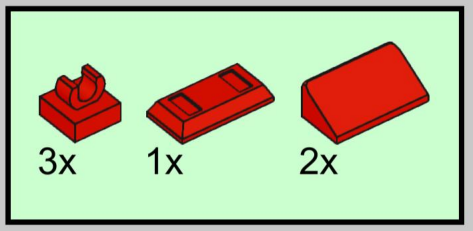

86



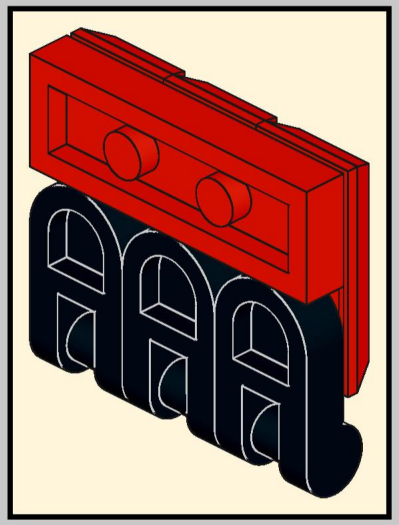

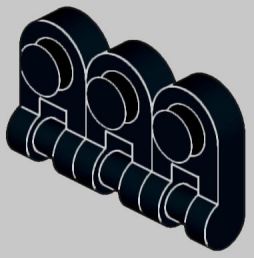

87

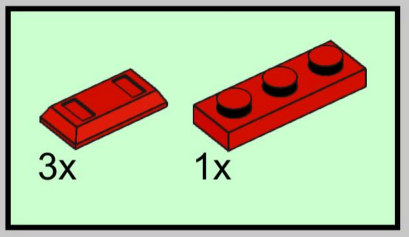

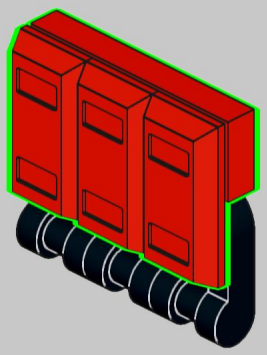

88

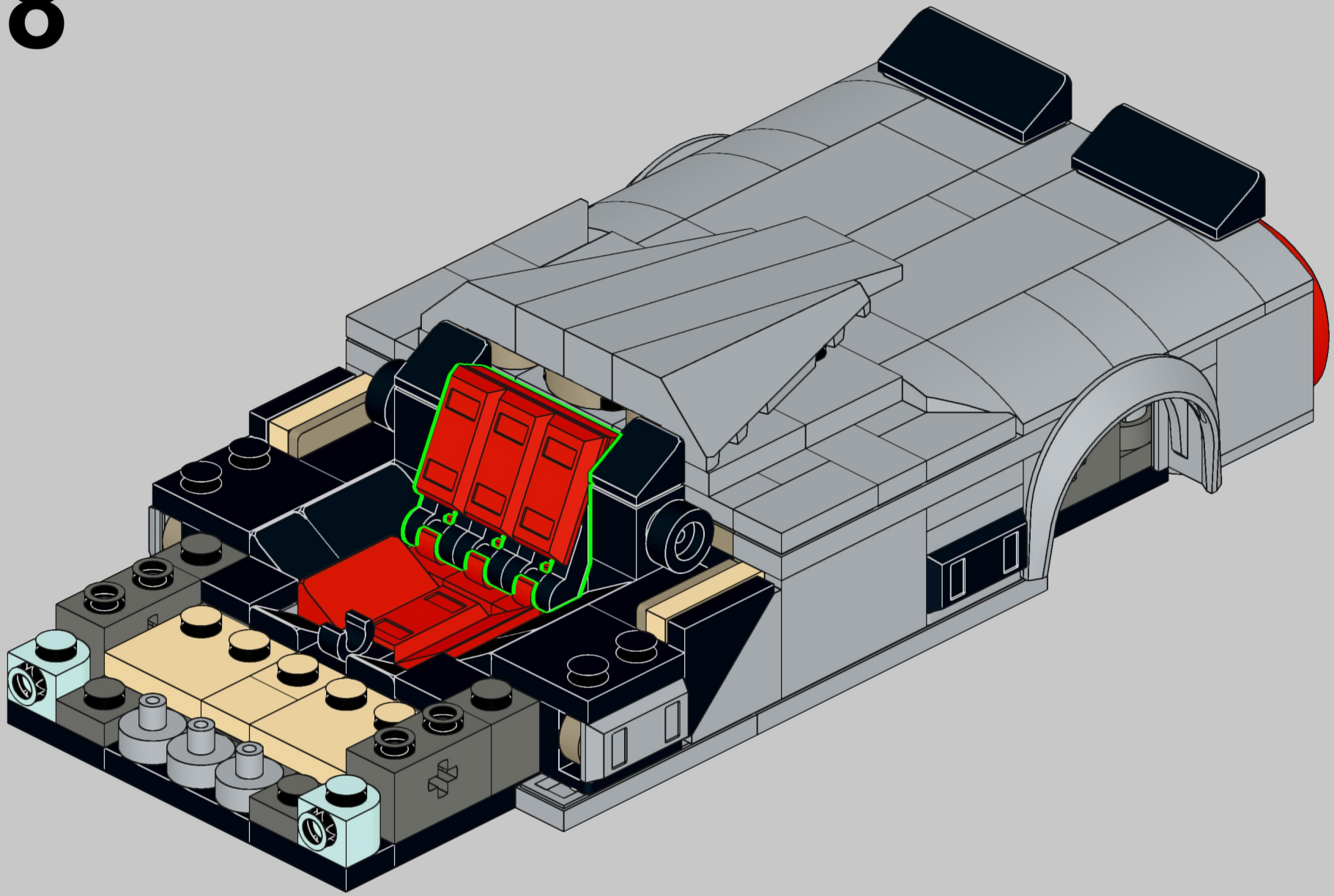

89

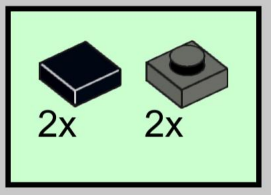

90

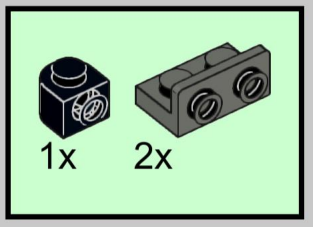

91

2x

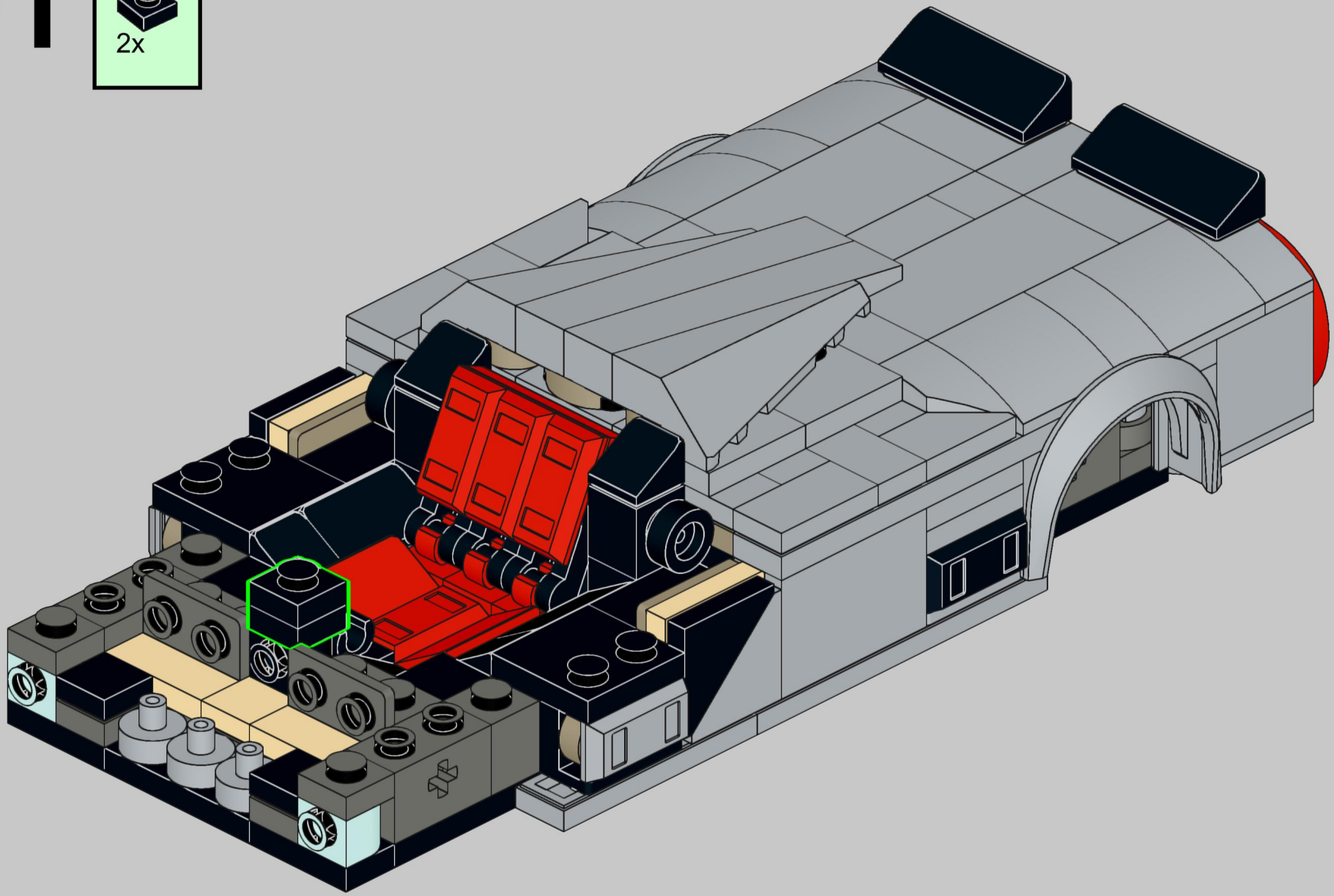

92



93

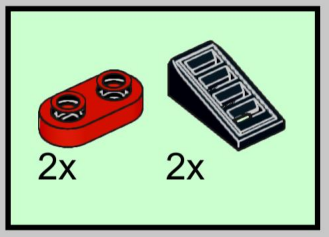

94

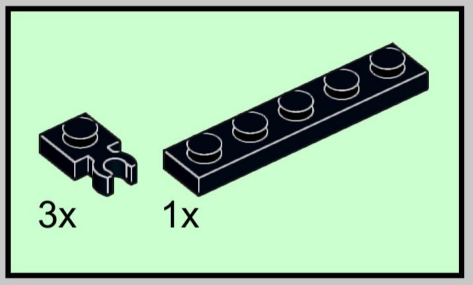

95

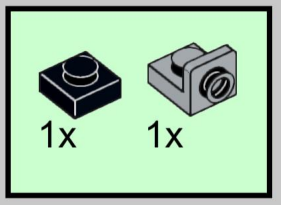

96

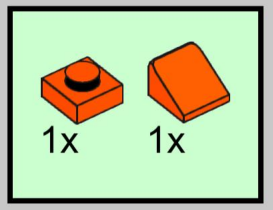

97

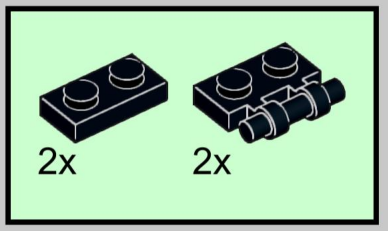

98

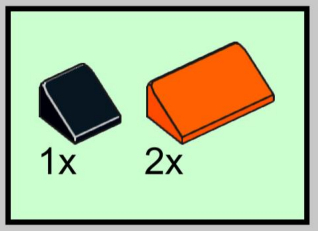

99

2x

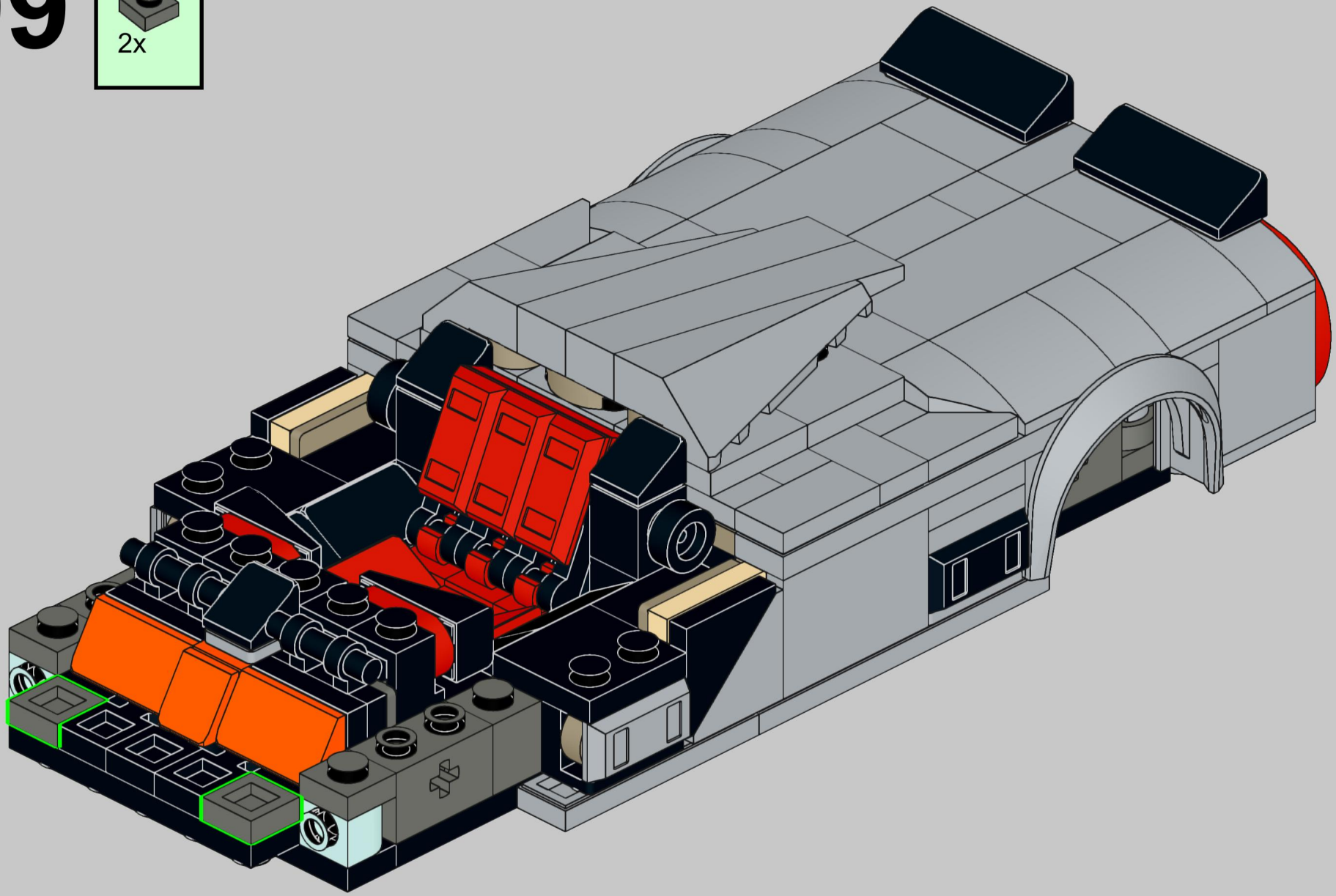

100

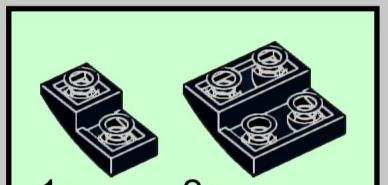

101

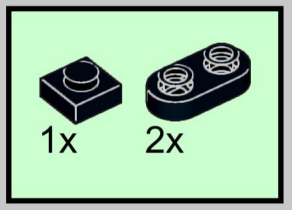

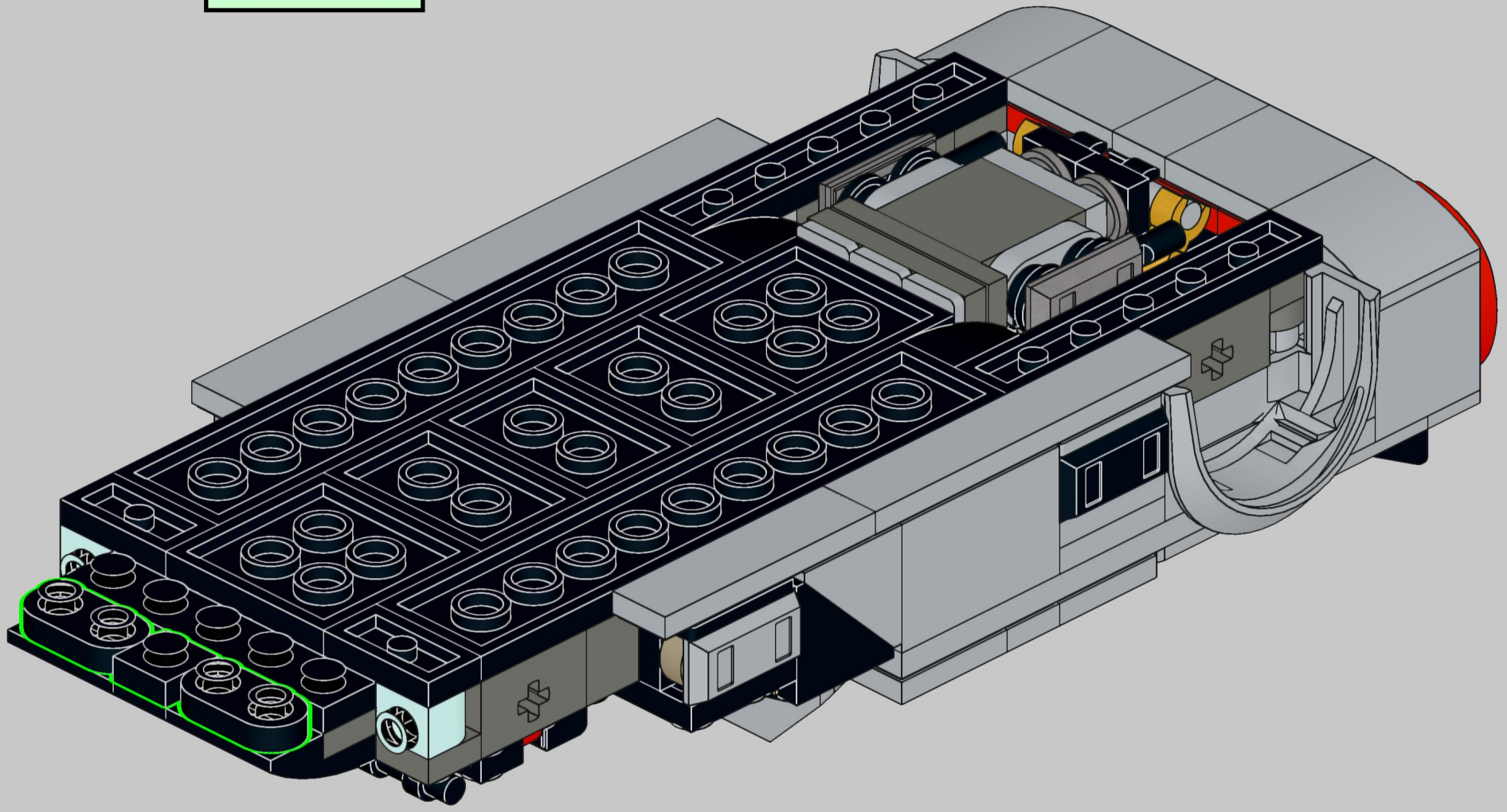

102

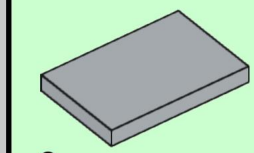

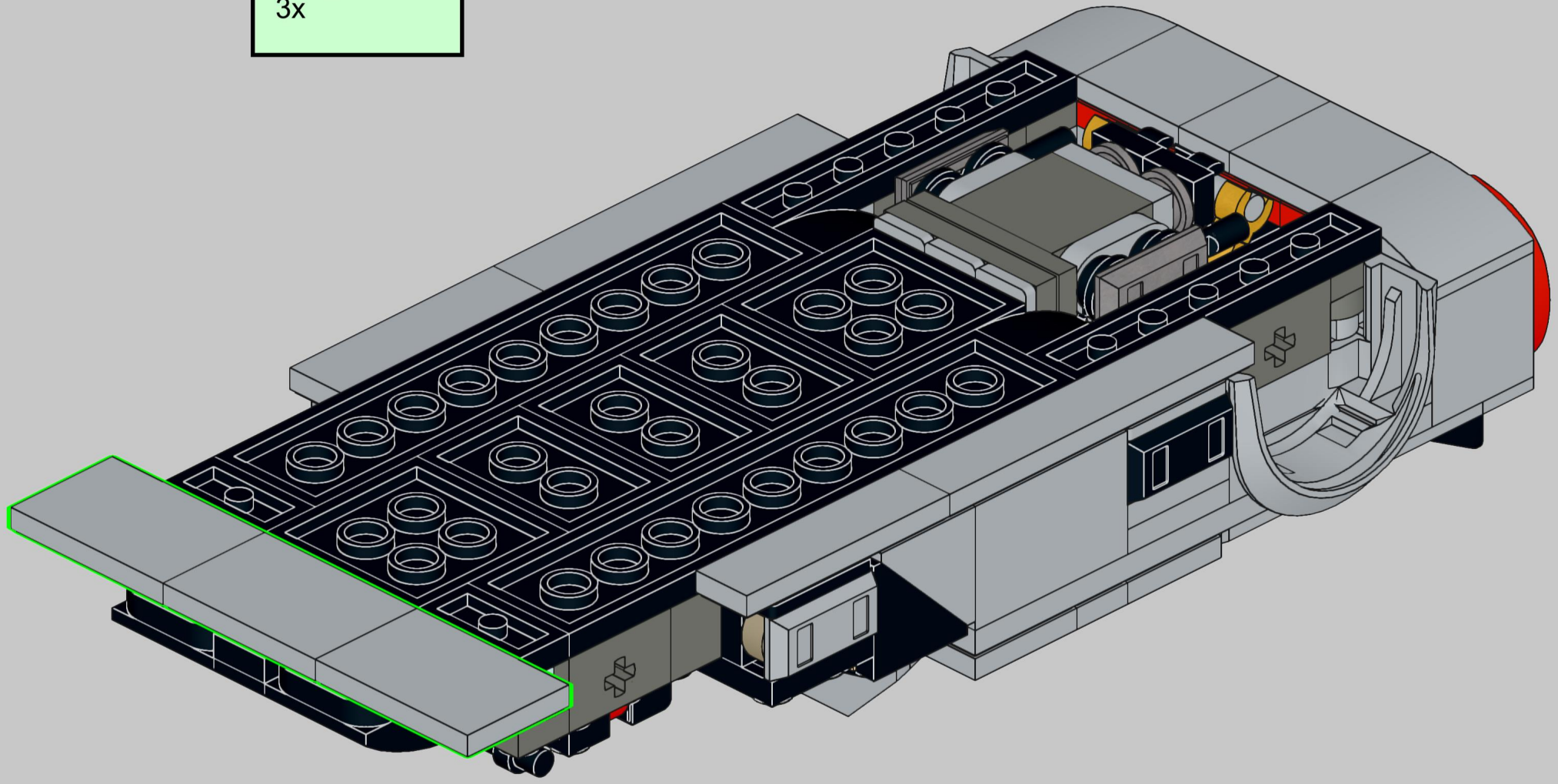

103

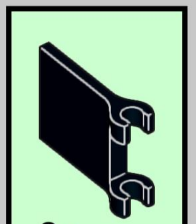

104

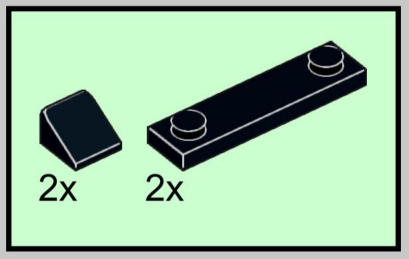

105

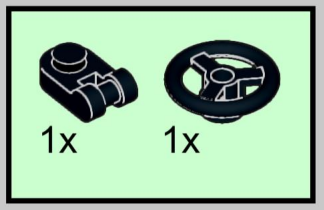

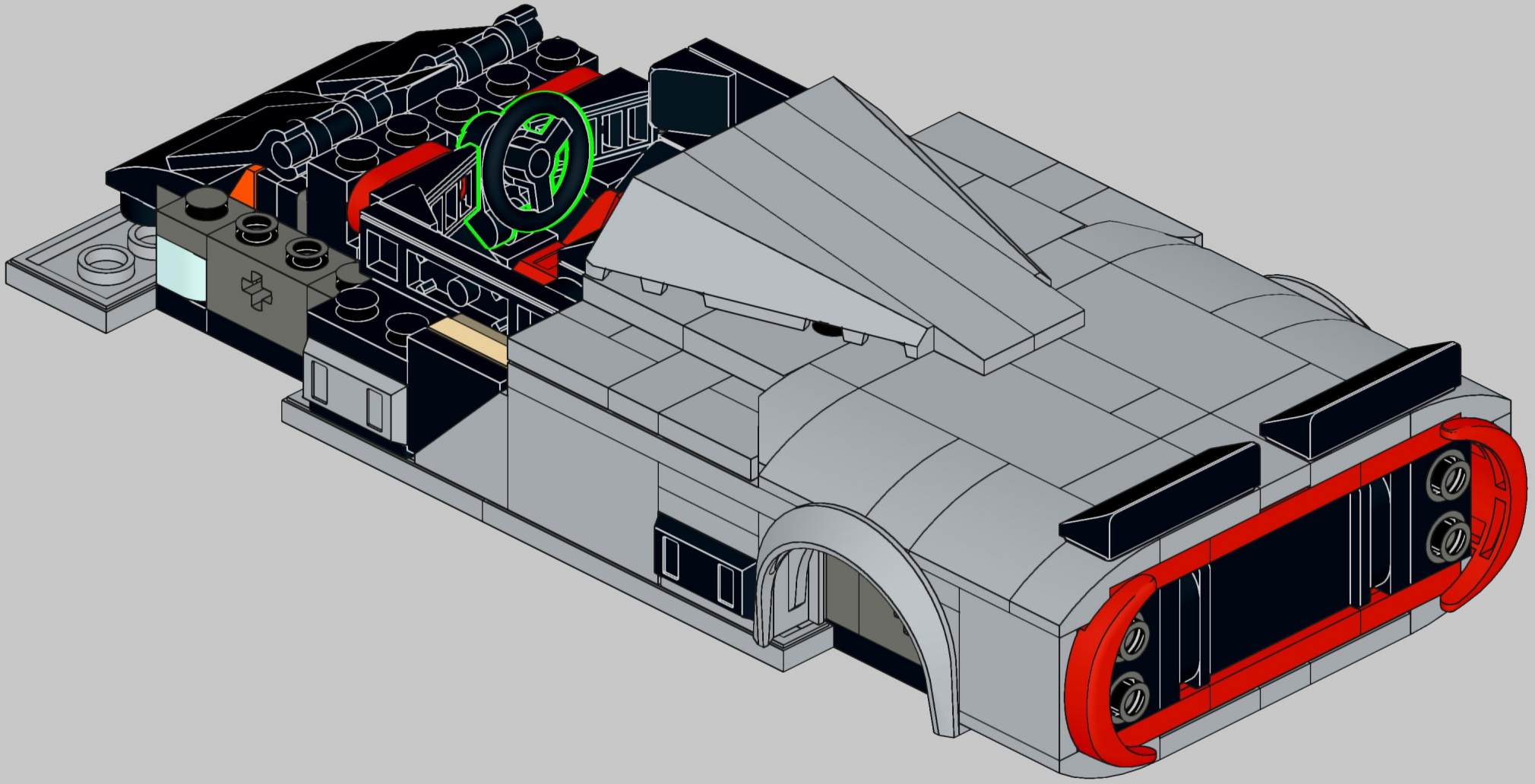

106

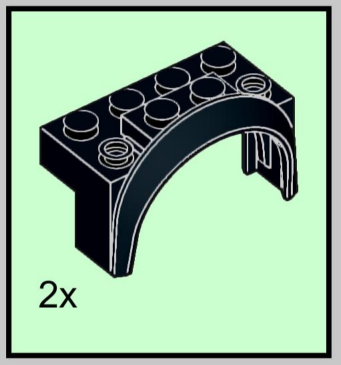

107

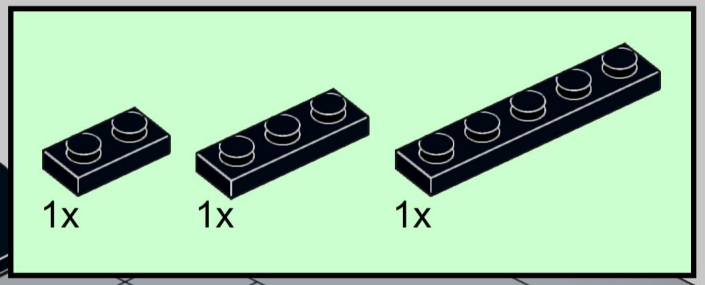

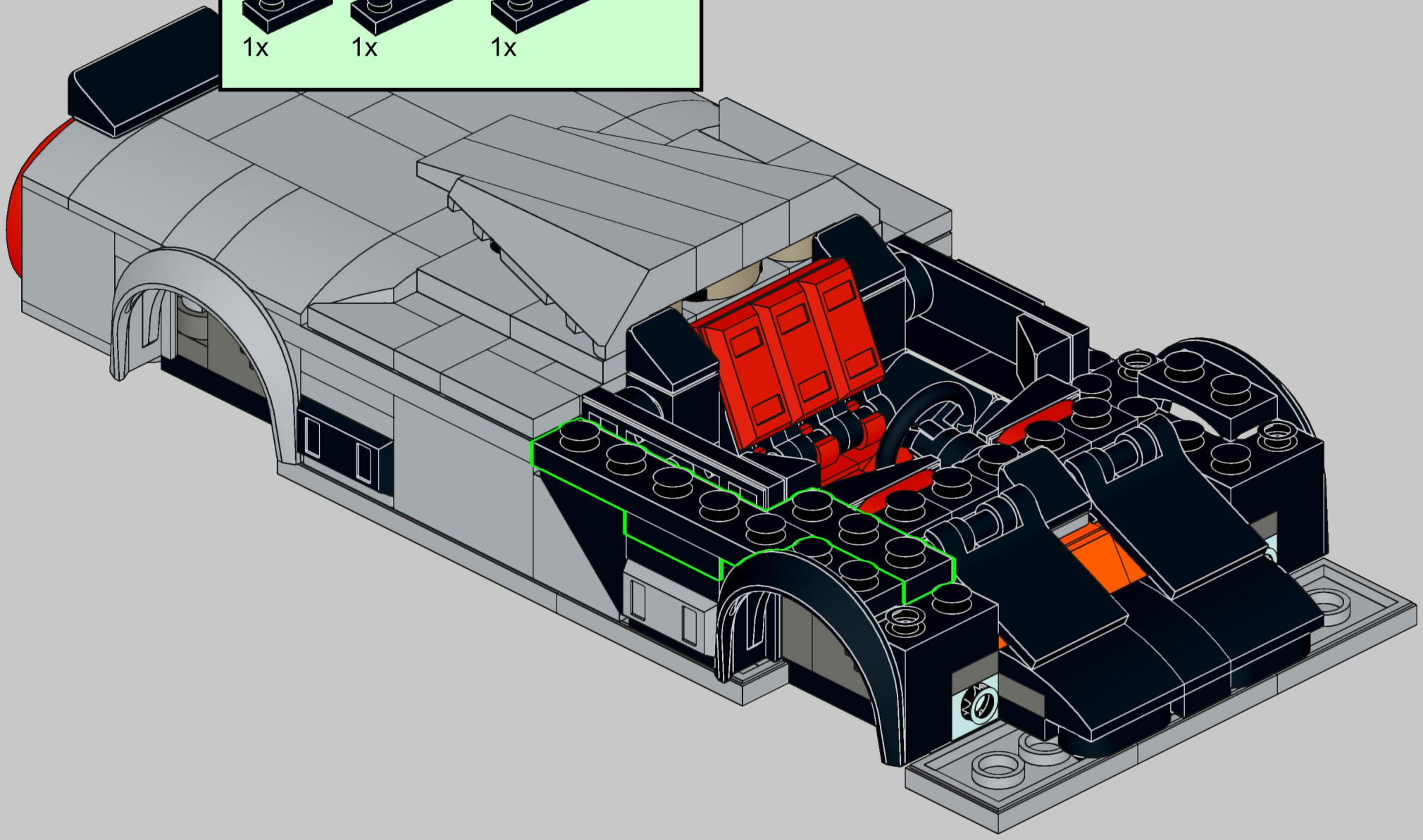

108

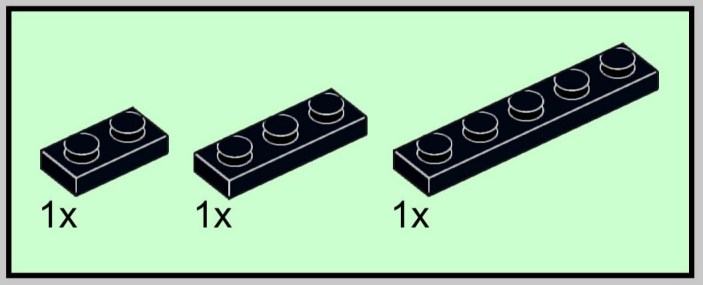

109

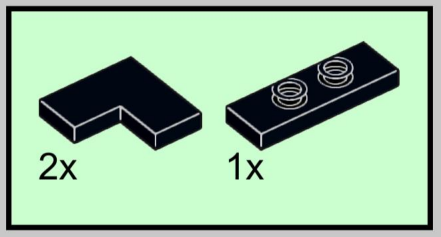

110

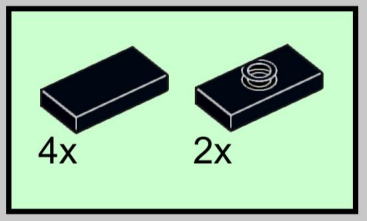

111

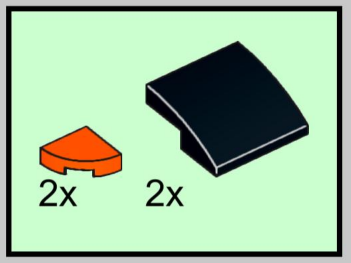

112

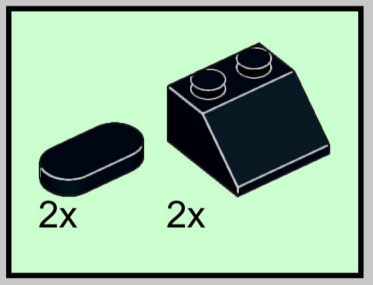

113

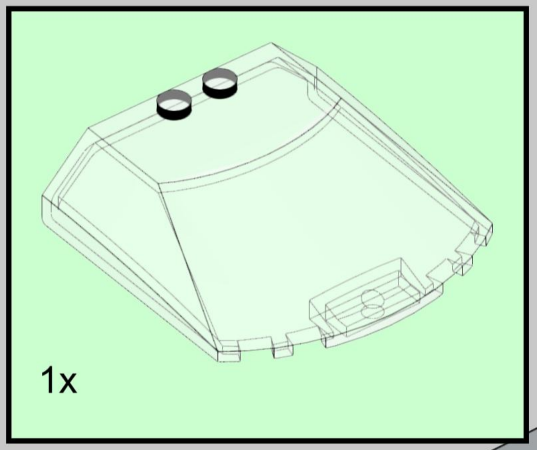

1x

114

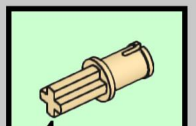

115

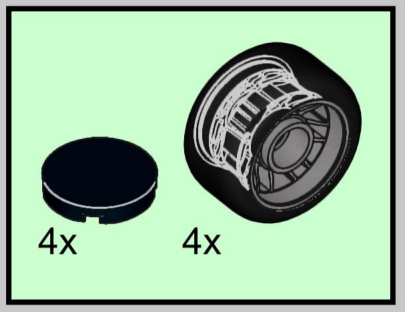

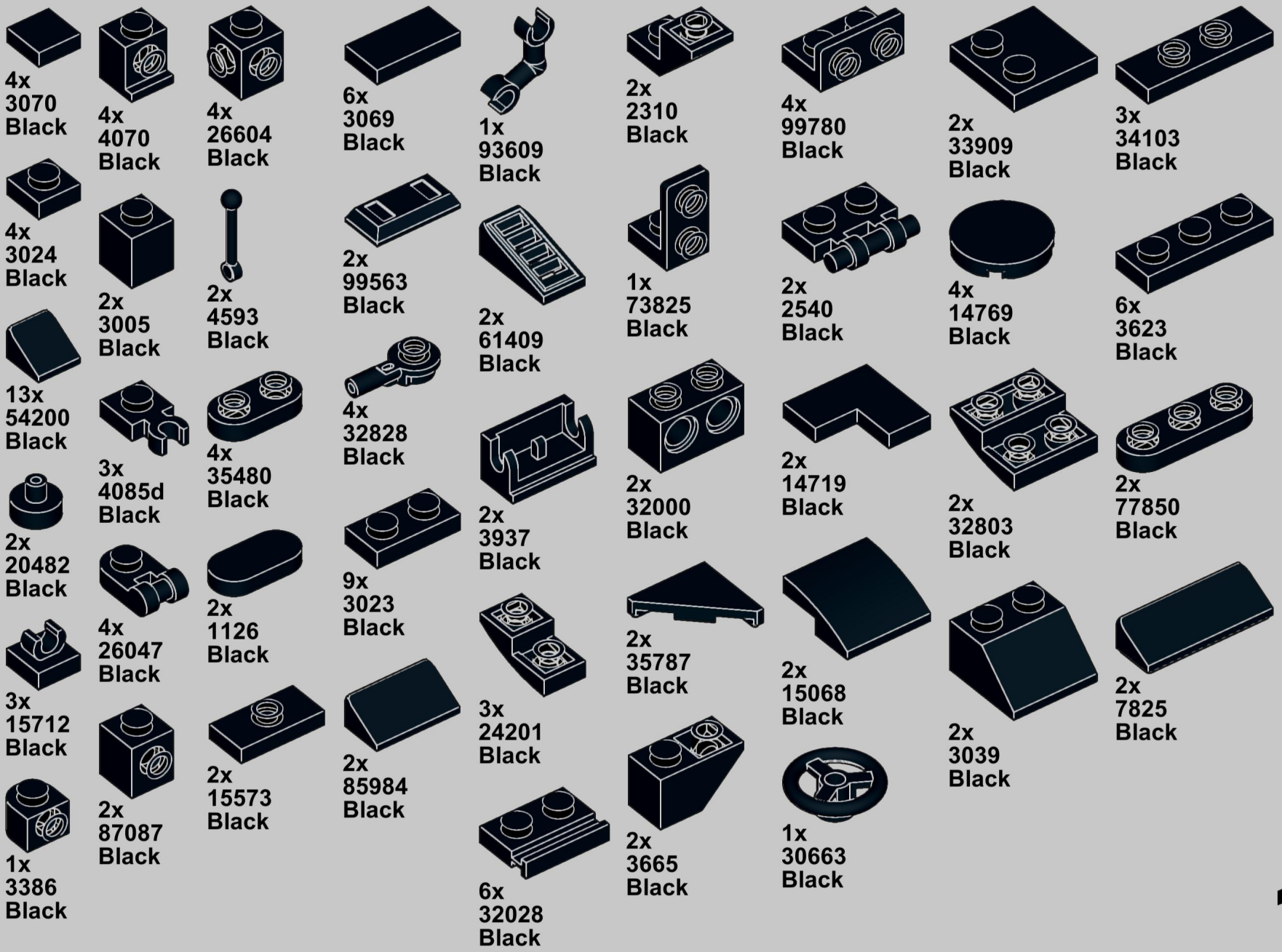
4x
3070
Black
4x
4070
Black
4x
26604
Black
6x
3069
Black
1x
93609
Black
2x
2310
Black
4x
99780
Black
2x
33909
Black
3x
34103
Black
4x
3024
Black
2x
3005
Black
2x
4593
Black
2x
99563
Black
2x
61409
Black
1x
73825
Black
2x
2540
Black
4x
14769
Black
6x
3623
Black
13x
54200
Black
3x
4085d
Black
4x
35480
Black
4x
32828
Black
2x
32000
Black
2x
14719
Black
2x
32803
Black
2x
77850
Black
2x
20482
Black
4x
26047
Black
2x
1126
Black
9x
3023
Black
2x
3937
Black
2x
35787
Black
2x
15068
Black
2x
3039
Black
2x
7825
Black
3x
15712
Black
2x
87087
Black
2x
15573
Black
2x
85984
Black
3x
24201
Black
2x
3665
Black
1x
30663
Black
1x
3386
Black
6x
32028
Black

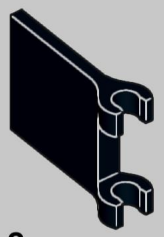

2x
80326
Black

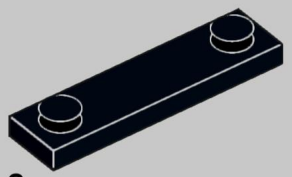

2x
41740
Black

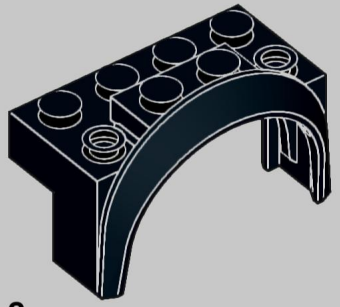

2x
3387
Black

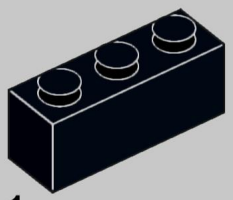

1x
3622
Black

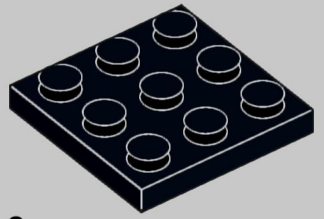

2x
11212
Black

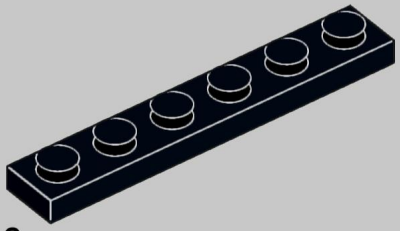

2x
3666
Black

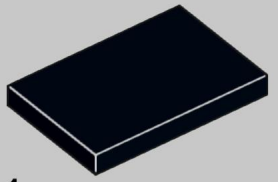

1x
26603
Black

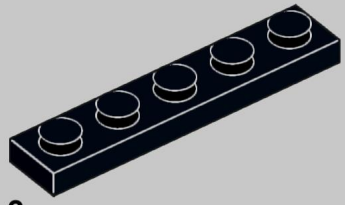

3x
78329
Black

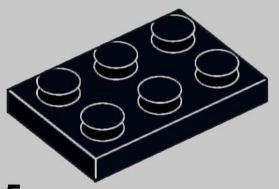

5x
3021
Black

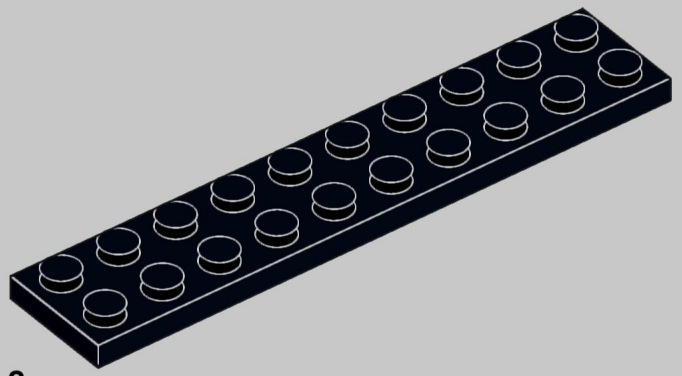

2x
3832
Black

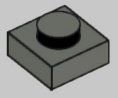

7x
3024
Dark Bluish Gray

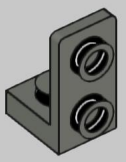

2x
73825
Dark Bluish Gray



4x
89678
Dark Bluish Gray

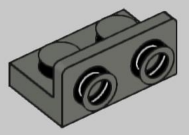

2x
99780
Dark Bluish Gray



2x
20482
Dark Bluish Gray

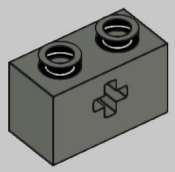

4x
32064
Dark Bluish Gray

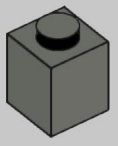

4x
3005
Dark Bluish Gray

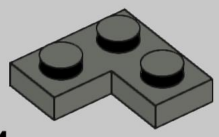

4x
2420
Dark Bluish Gray

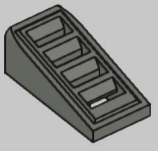

1x
61409
Dark Bluish Gray

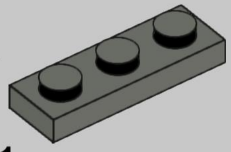

1x
3623
Dark Bluish Gray

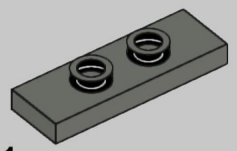

1x
34103
Dark Bluish Gray



3x
20482
Light Bluish Gray

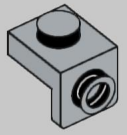

3x
36841
Light Bluish Gray

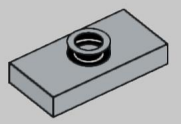

4x
15573
Light Bluish Gray

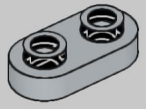

2x
35480
Light Bluish Gray

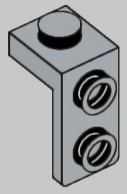

2x
79389
Light Bluish Gray

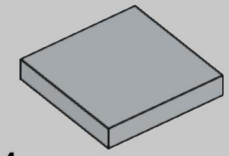

4x
3068
Light Bluish Gray

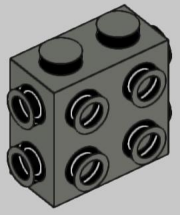

1x
67329
Dark Bluish Gray



1x
79194
Light Bluish Gray

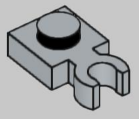

2x
4085d
Light Bluish Gray

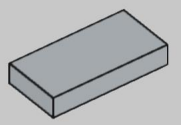

6x
3069
Light Bluish Gray

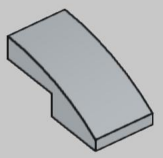

4x
11477
Light Bluish Gray

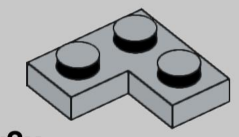

2x
2420
Light Bluish Gray

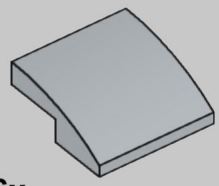

6x
15068
Light Bluish Gray

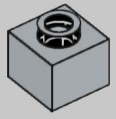

4x
86996
Light Bluish Gray



2x
4592
Light Bluish Gray

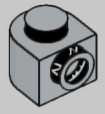

4x
3386
Light Bluish Gray

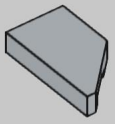

1x
5091
Light Bluish Gray

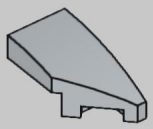

2x
29119
Light Bluish Gray

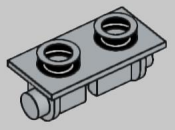

2x
3938
Light Bluish Gray

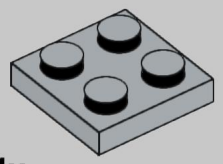

4x
3022
Light Bluish Gray

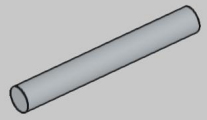

1x
87994
Light Bluish Gray

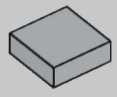

1x
3070
Light Bluish Gray

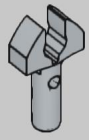

2x
48729b
Light Bluish Gray

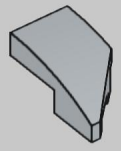

2x
29120
Light Bluish Gray

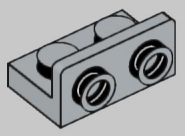

3x
99780
Light Bluish Gray

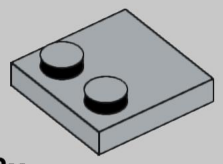

8x
33909
Light Bluish Gray

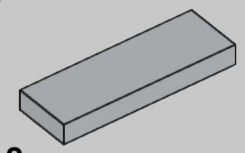

2x
63864
Light Bluish Gray

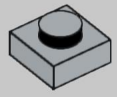

4x
3024
Light Bluish Gray

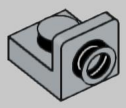

1x
36840
Light Bluish Gray

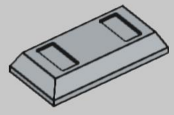

2x
99563
Light Bluish Gray

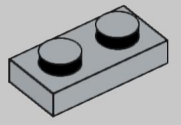

5x
3023
Light Bluish Gray

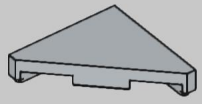

2x
35787
Light Bluish Gray

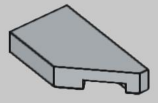

1x
5092
Light Bluish Gray

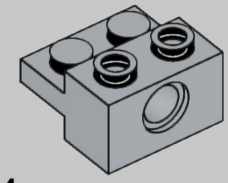

4x
73109
Light Bluish Gray

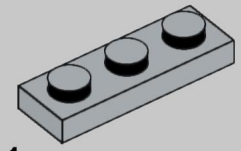

1x
3623
Light Bluish Gray

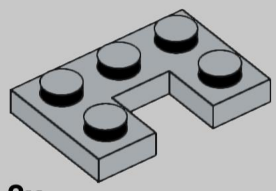

2x
73831
Light Bluish Gray

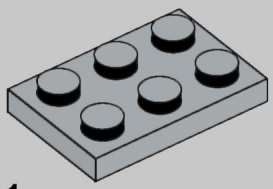

1x
3021
Light Bluish Gray

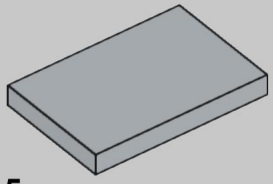

5x
26603
Light Bluish Gray

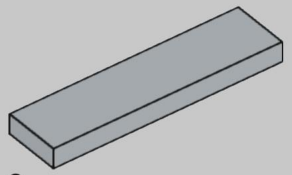

3x
2431
Light Bluish Gray

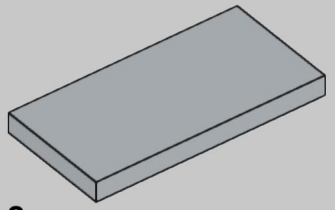

2x
87079
Light Bluish Gray

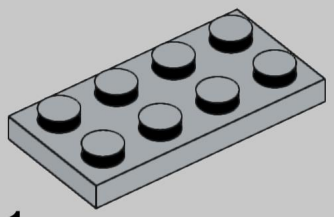

1x
3020
Light Bluish Gray

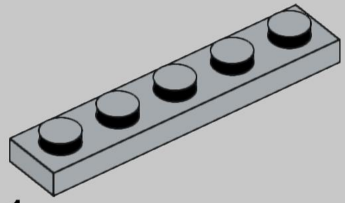

1x
78329
Light Bluish Gray

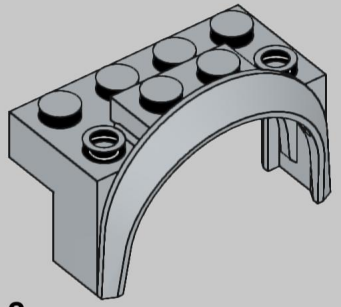

2x
3387
Light Bluish Gray

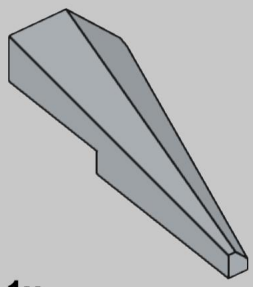

1x
3504
Light Bluish Gray

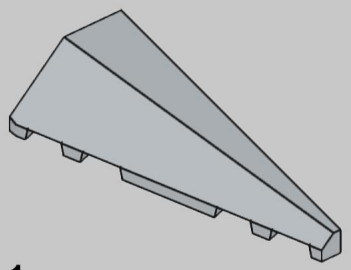

1x
3505
Light Bluish Gray

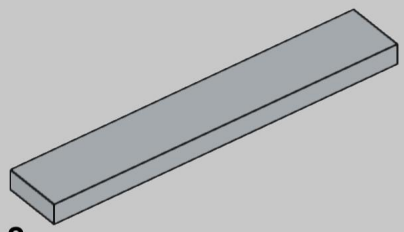

2x
6636
Light Bluish Gray

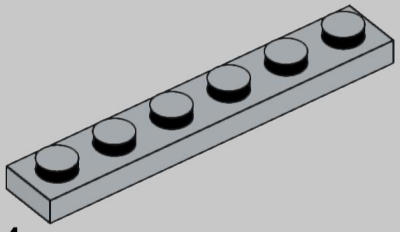

4x
3666
Light Bluish Gray

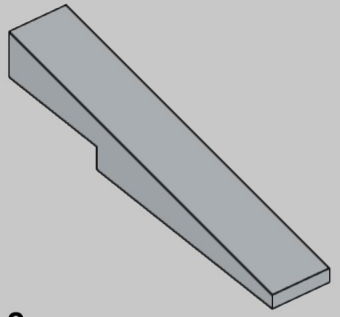

2x
4569
Light Bluish Gray



1x
98138
Dark Red



4x
89678
Red

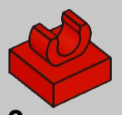

3x
15712
Red



2x
35480
Red

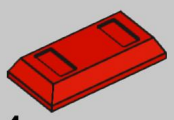

4x
99563
Red

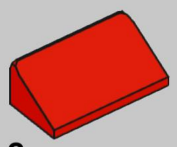

2x
85984
Red

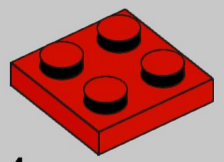

4x
3022
Red

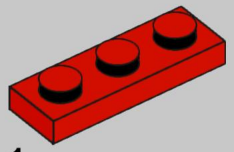

1x
3623
Red

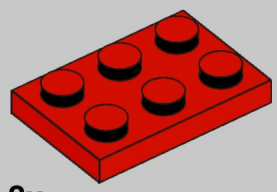

2x
3021
Red

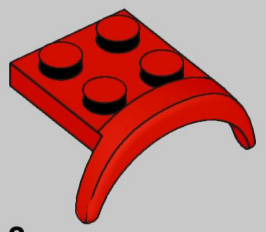

2x
49097
Red

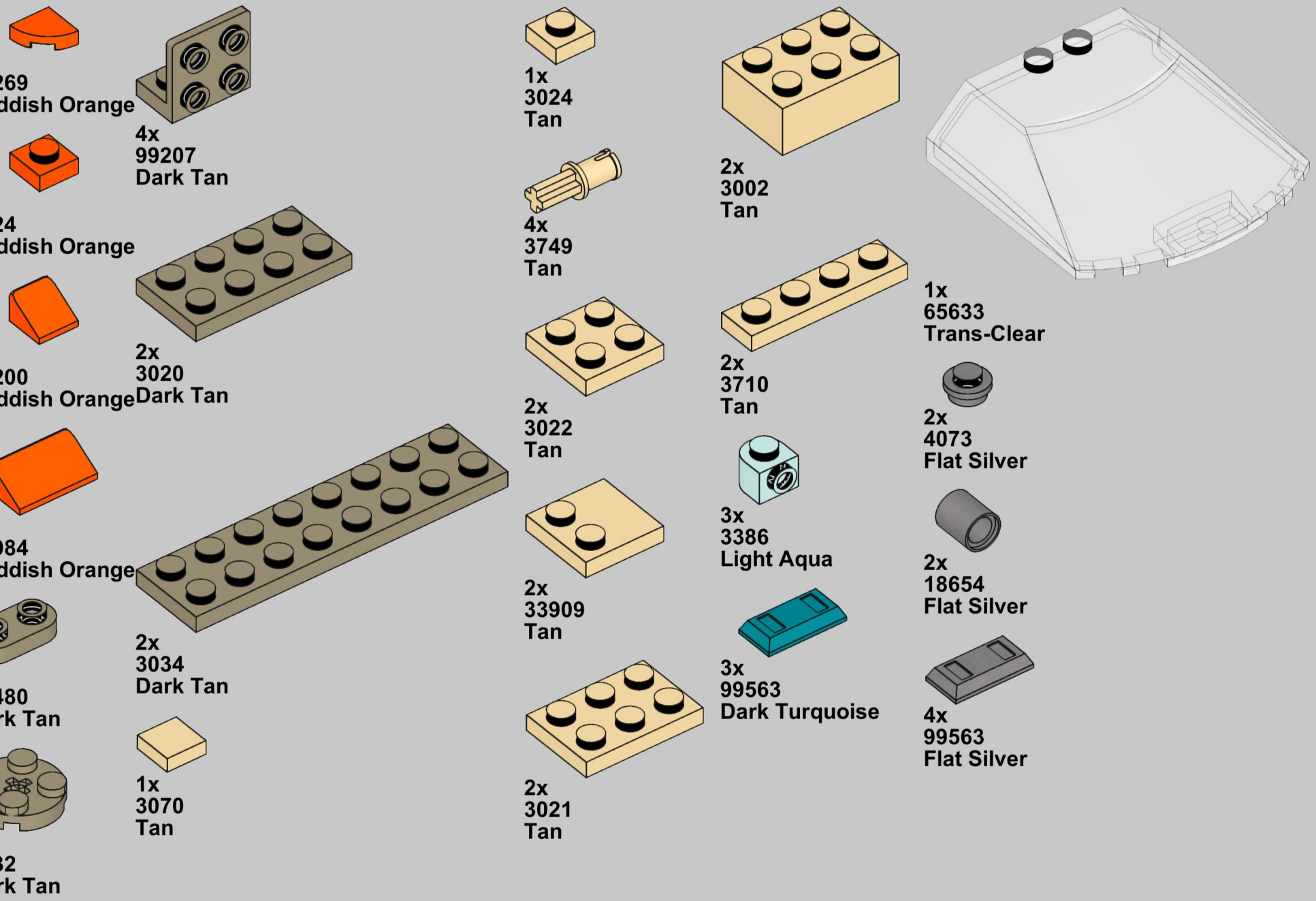
2x
25269
Reddish Orange
4x
99207
Dark Tan
1x
3024
Reddish Orange
1x
54200
Reddish Orange
2x
3020
Dark Tan
2x
85984
Reddish Orange
2x
3034
Dark Tan
6x
35480
Dark Tan
1x
3070
Tan
1x
4032
Dark Tan
1x
3024
Tan
4x
3749
Tan
2x
3022
Tan
2x
33909
Tan
2x
3021
Tan
2x
3002
Tan
2x
3710
Tan
3x
3386
Light Aqua
3x
99563
Dark Turquoise
1x
65633
Trans-Clear
2x
4073
Flat Silver
2x
18654
Flat Silver
4x
99563
Flat Silver

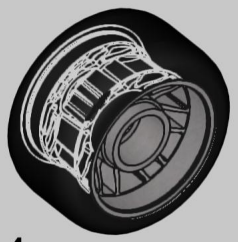

4x
105162pb01
Flat Silver



2x
11090
Pearl Gold

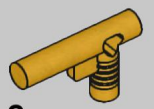

2x
60849
Pearl Gold