1



2

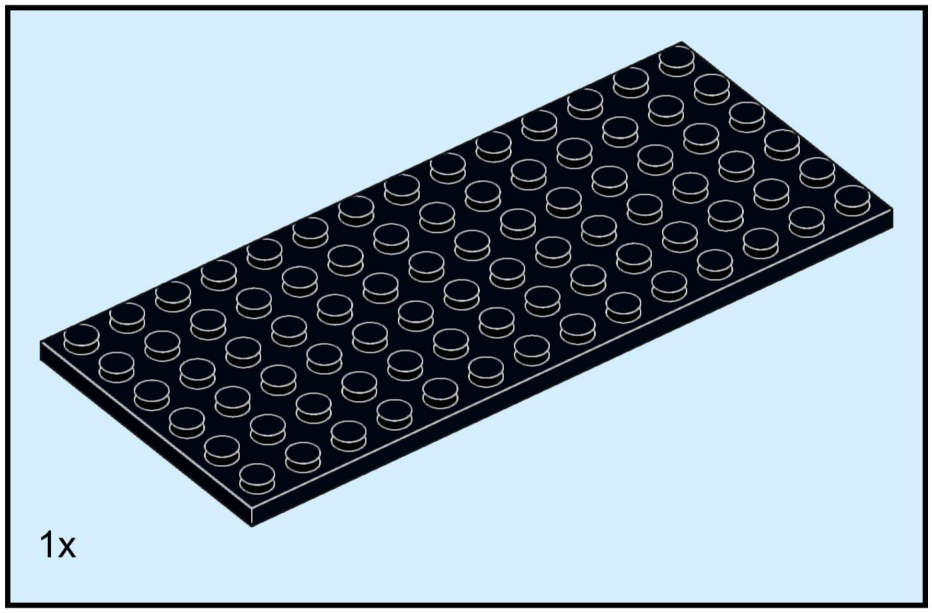

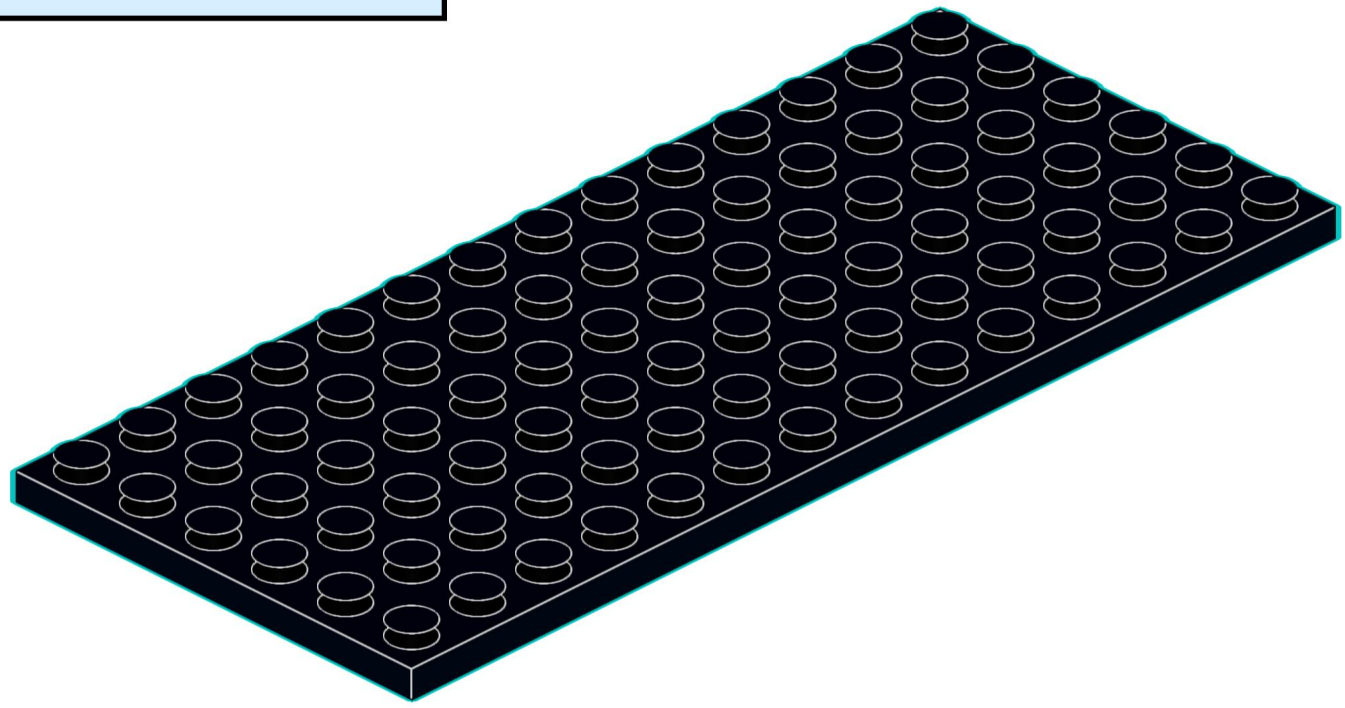

3

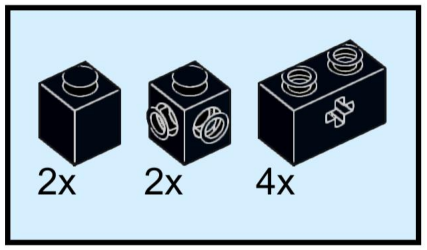

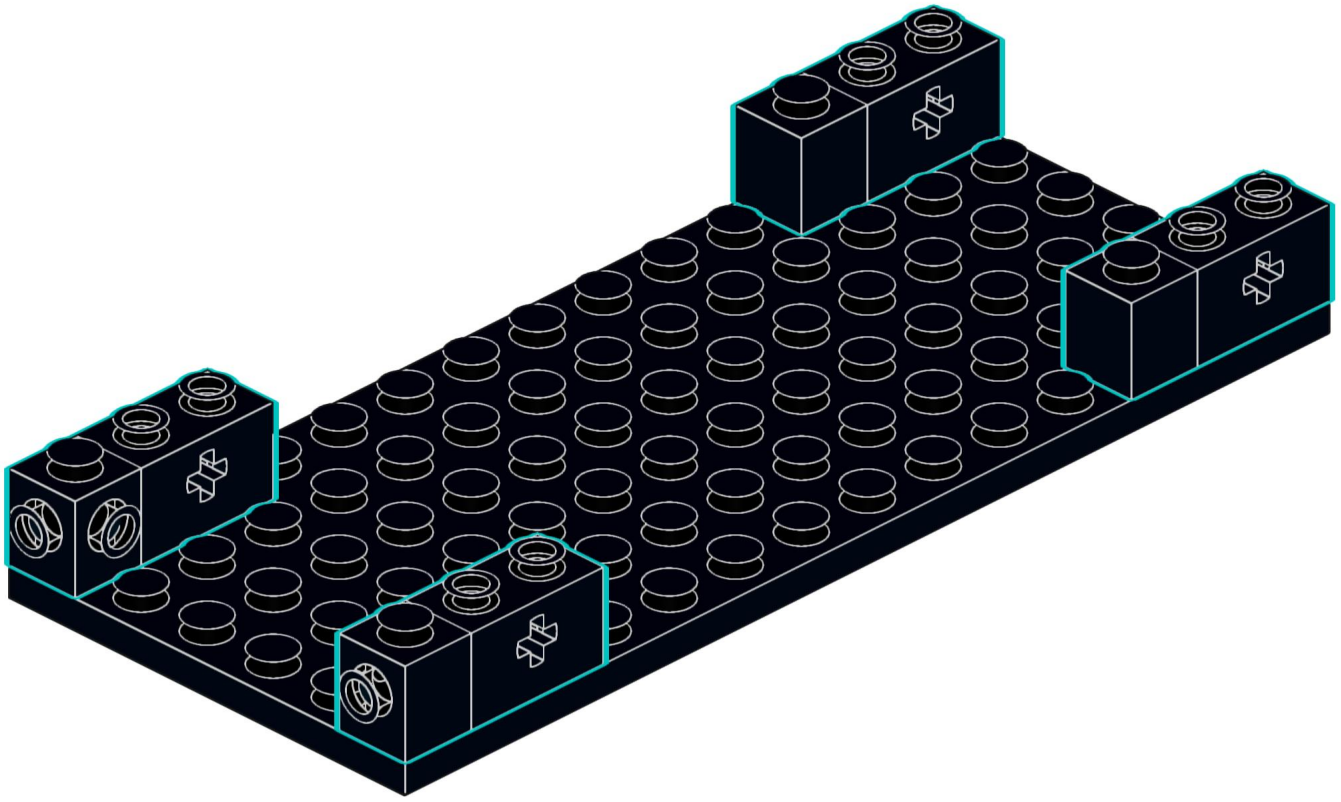

4

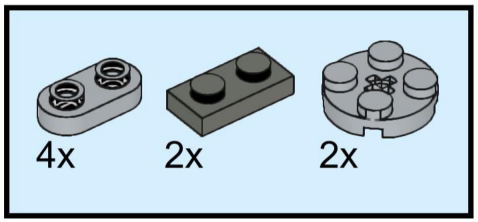

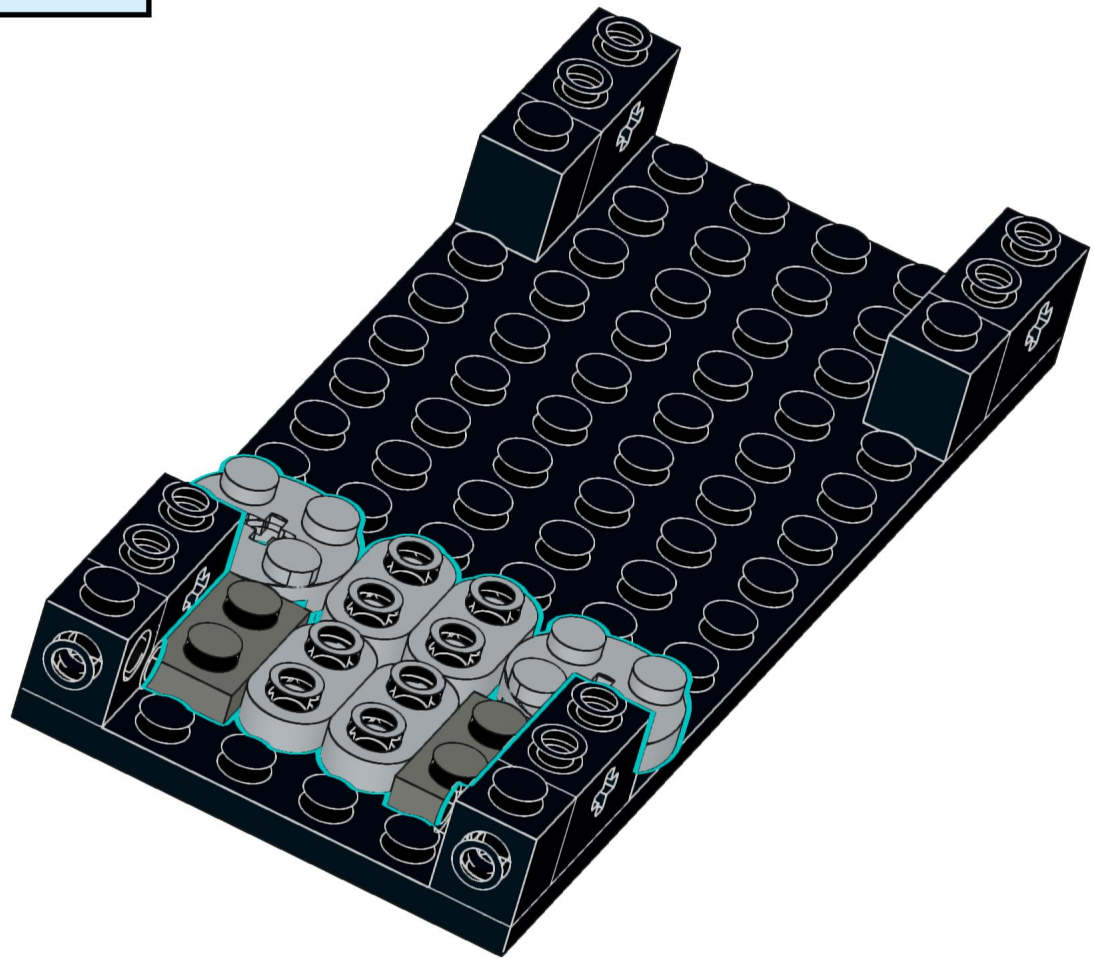

5

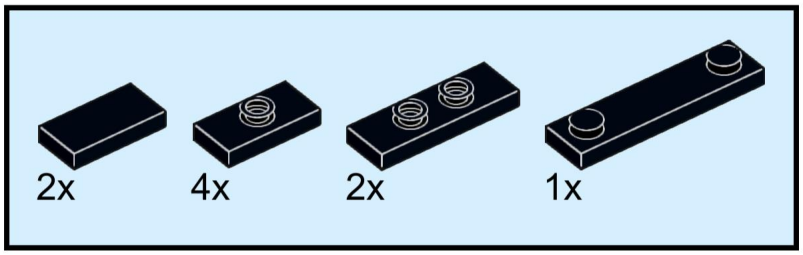

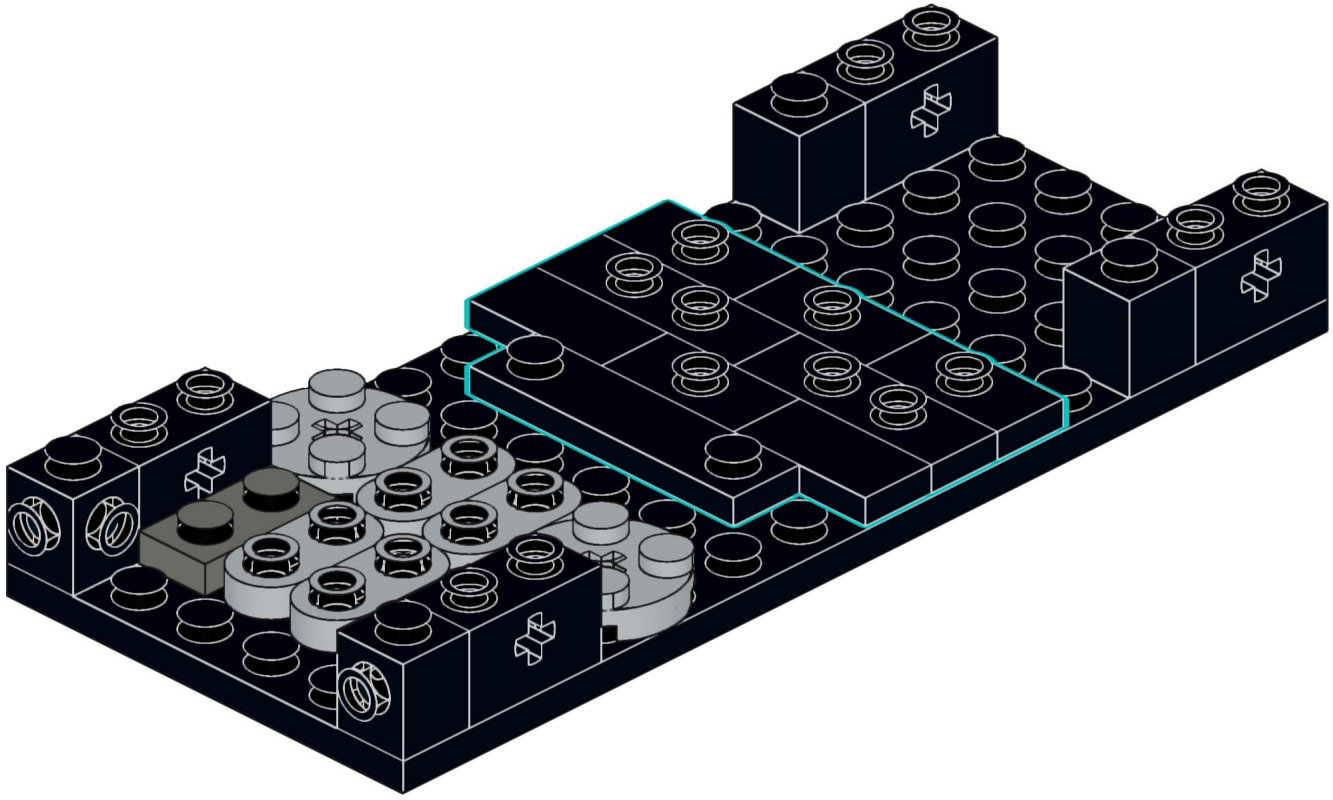

6

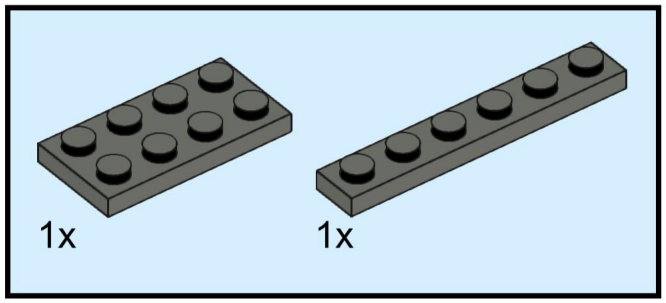

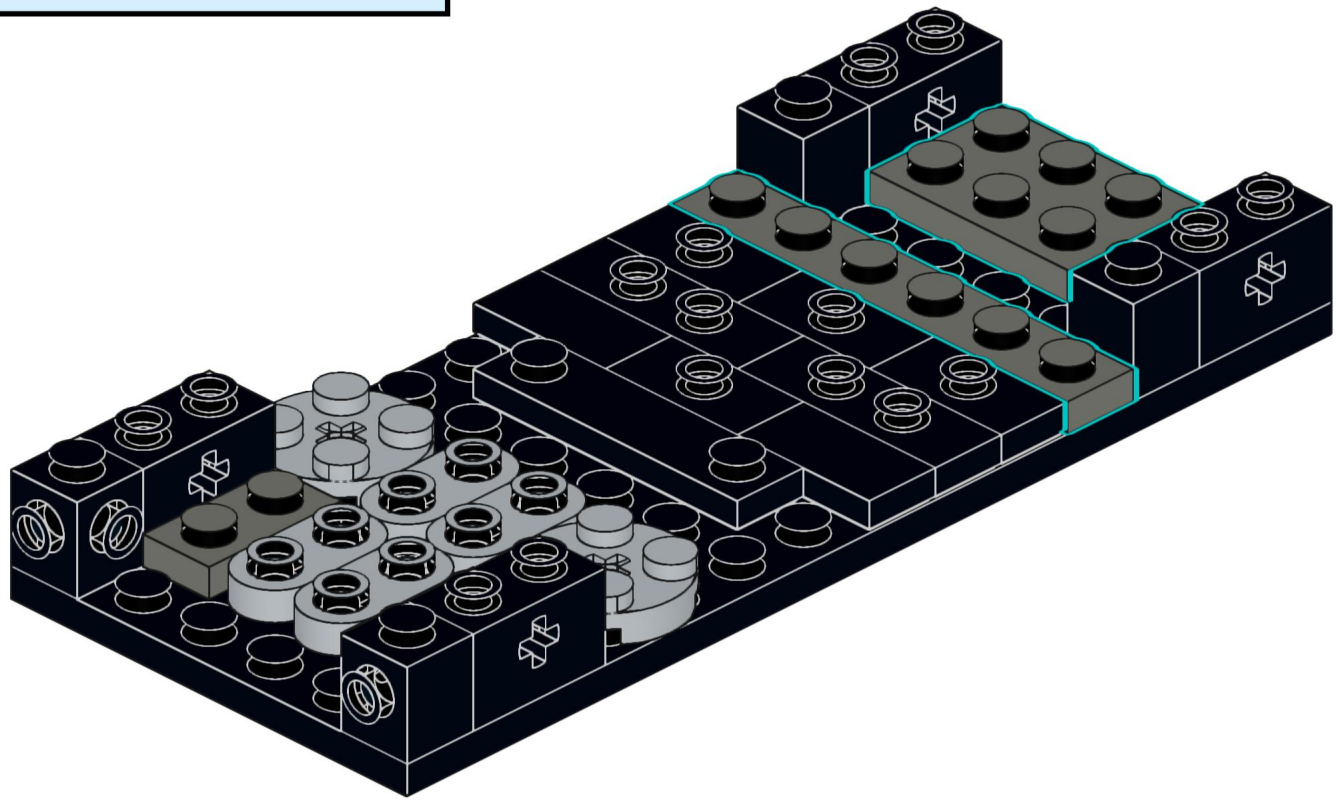

7

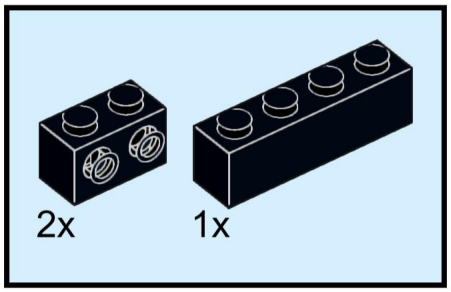

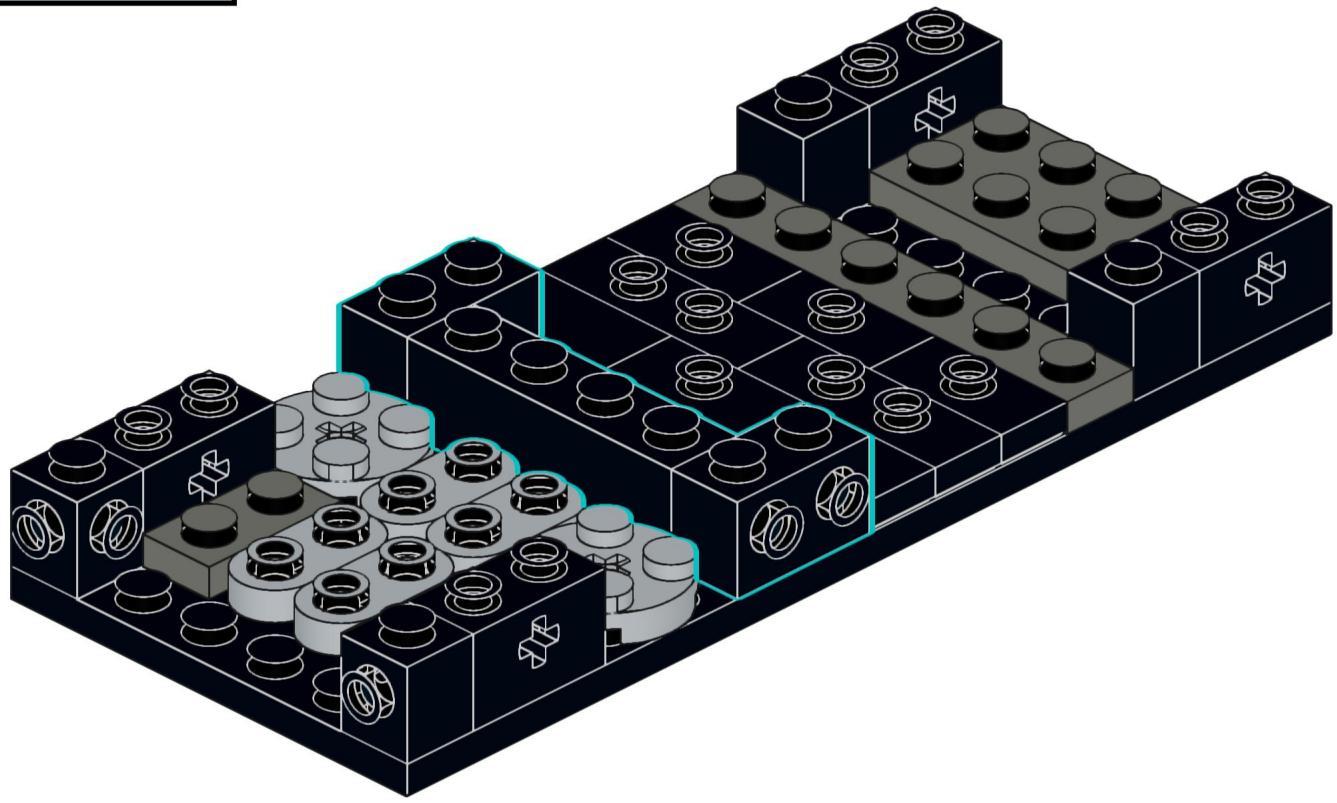

8

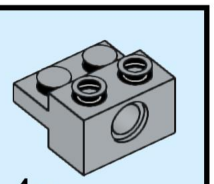

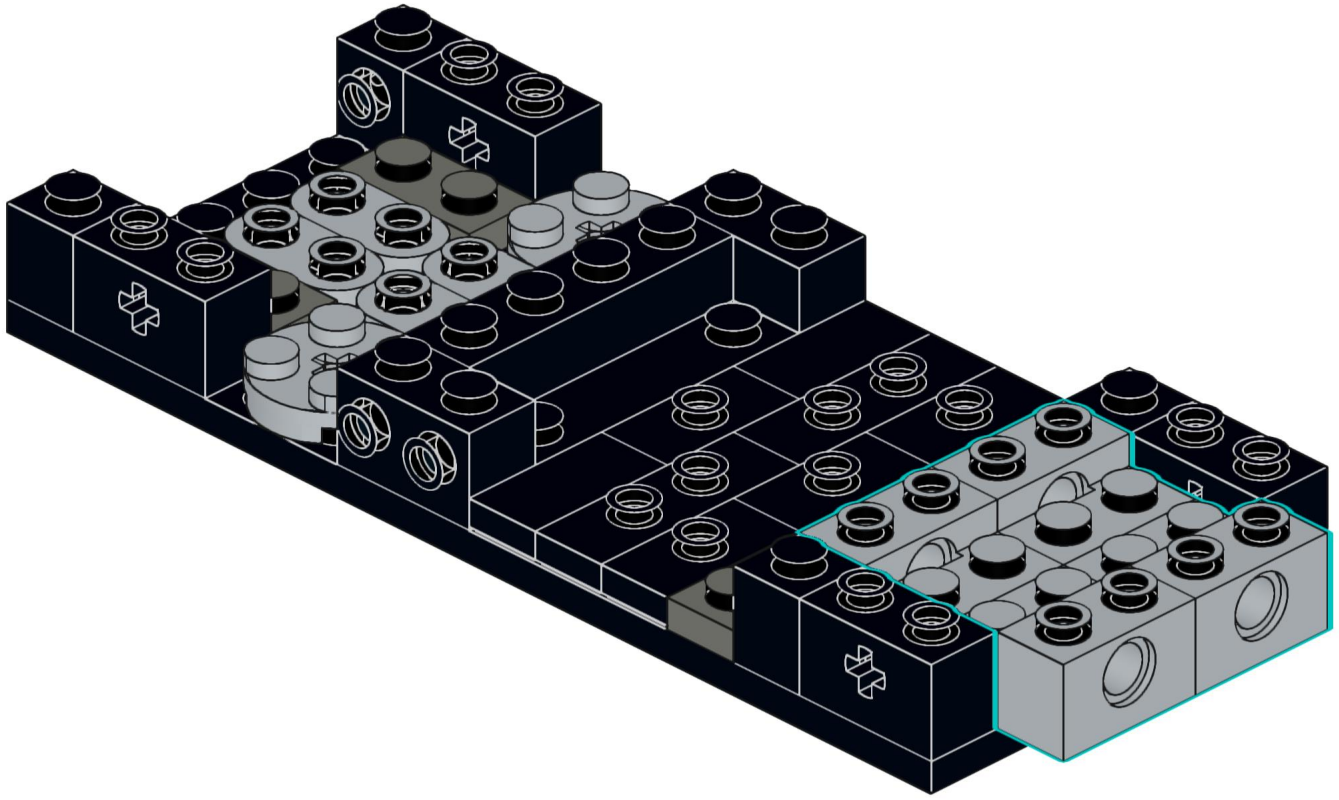

9

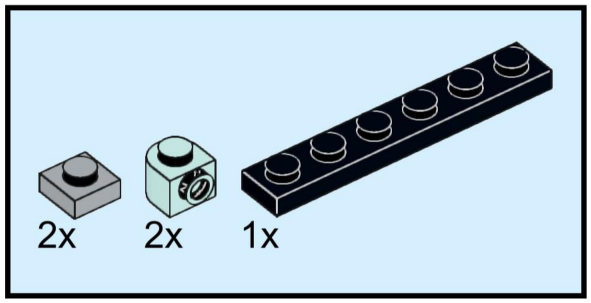

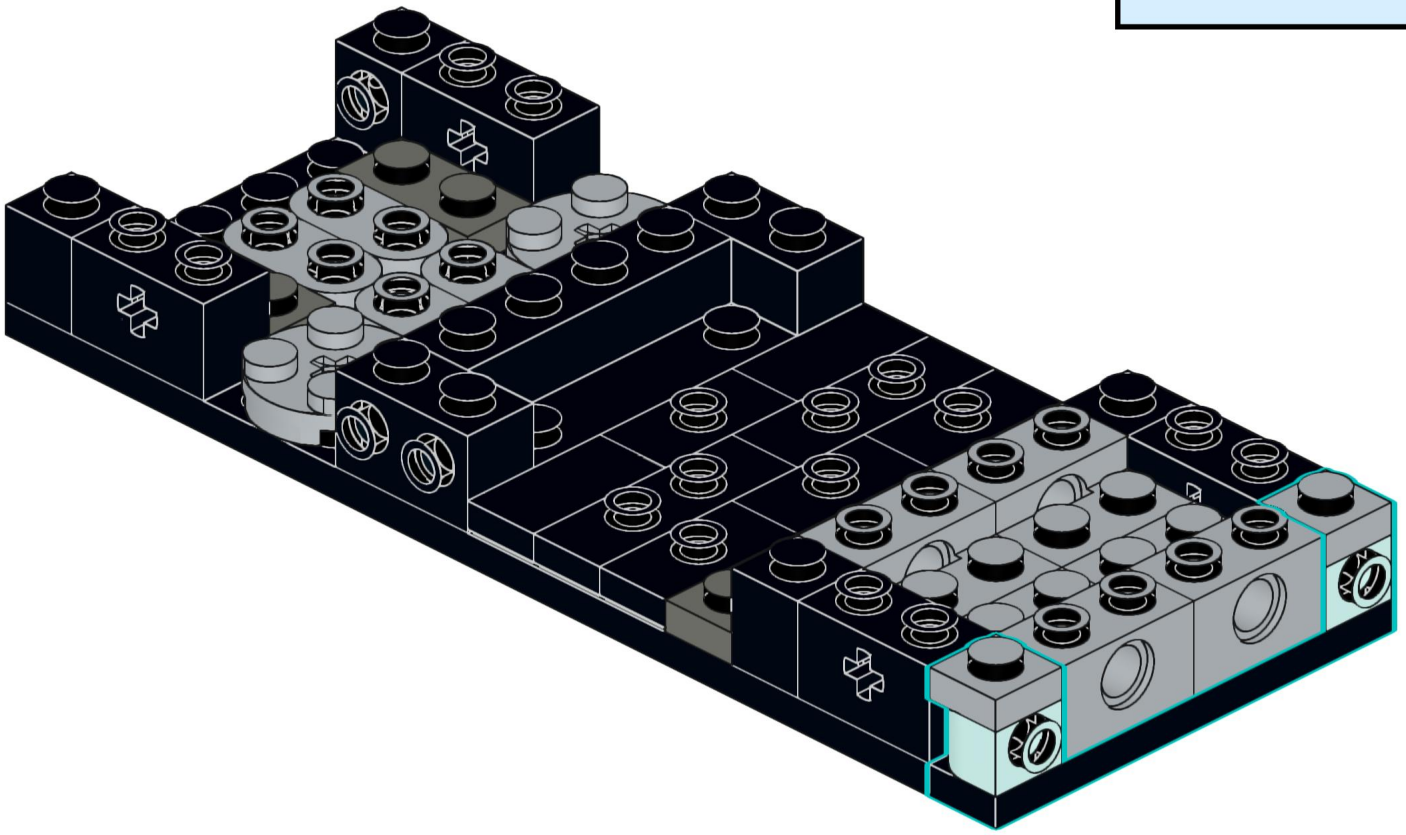

10

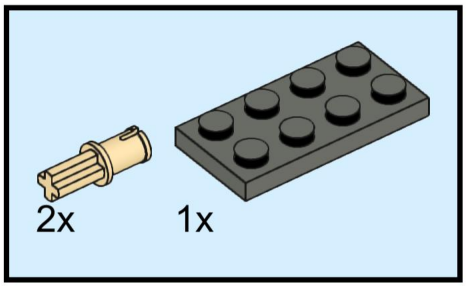

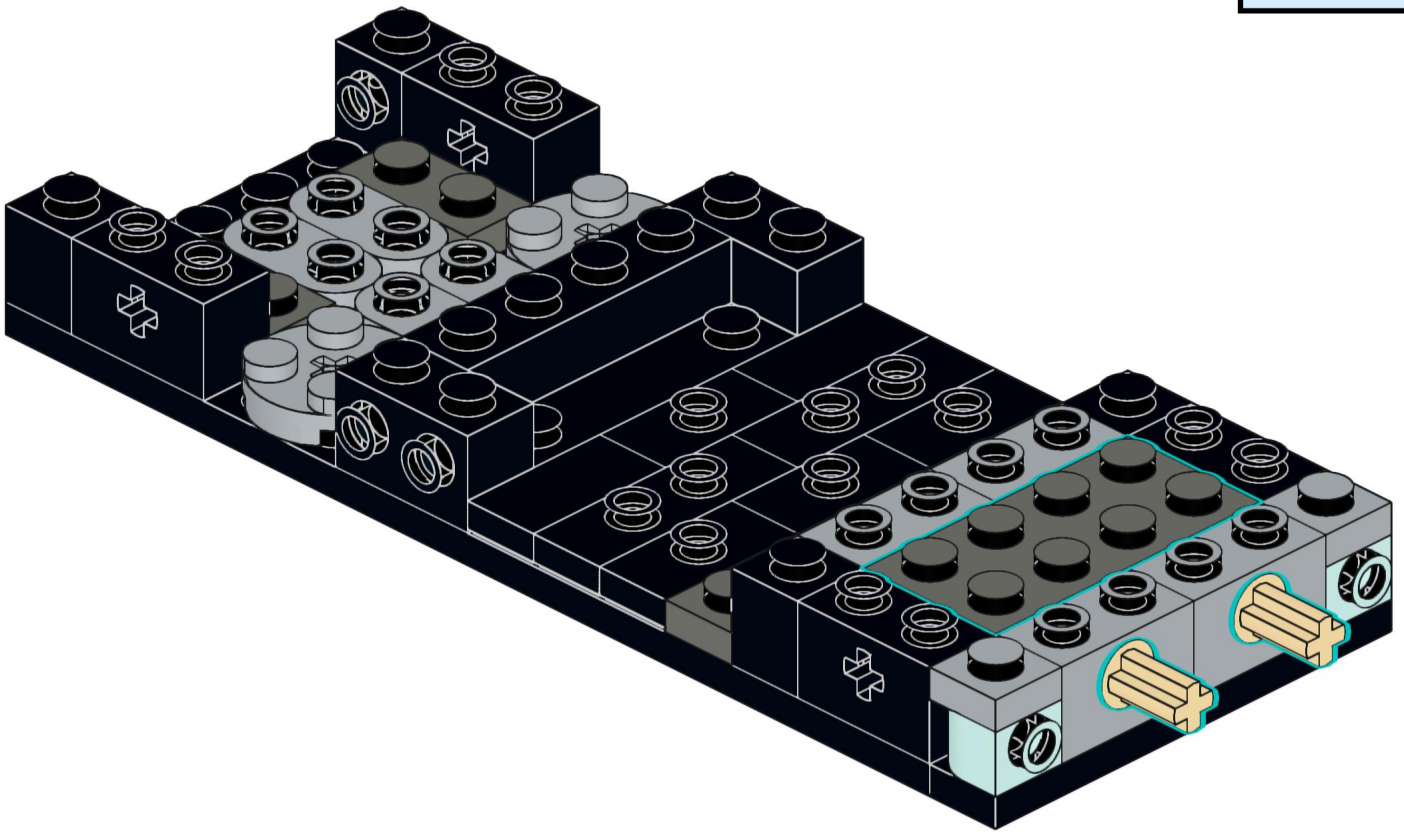

11

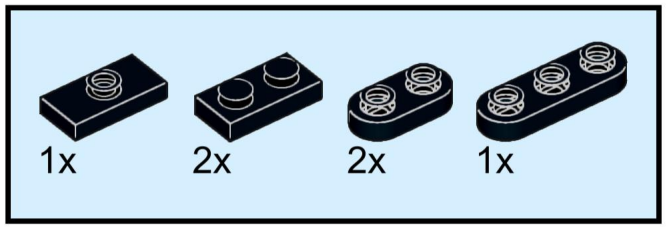

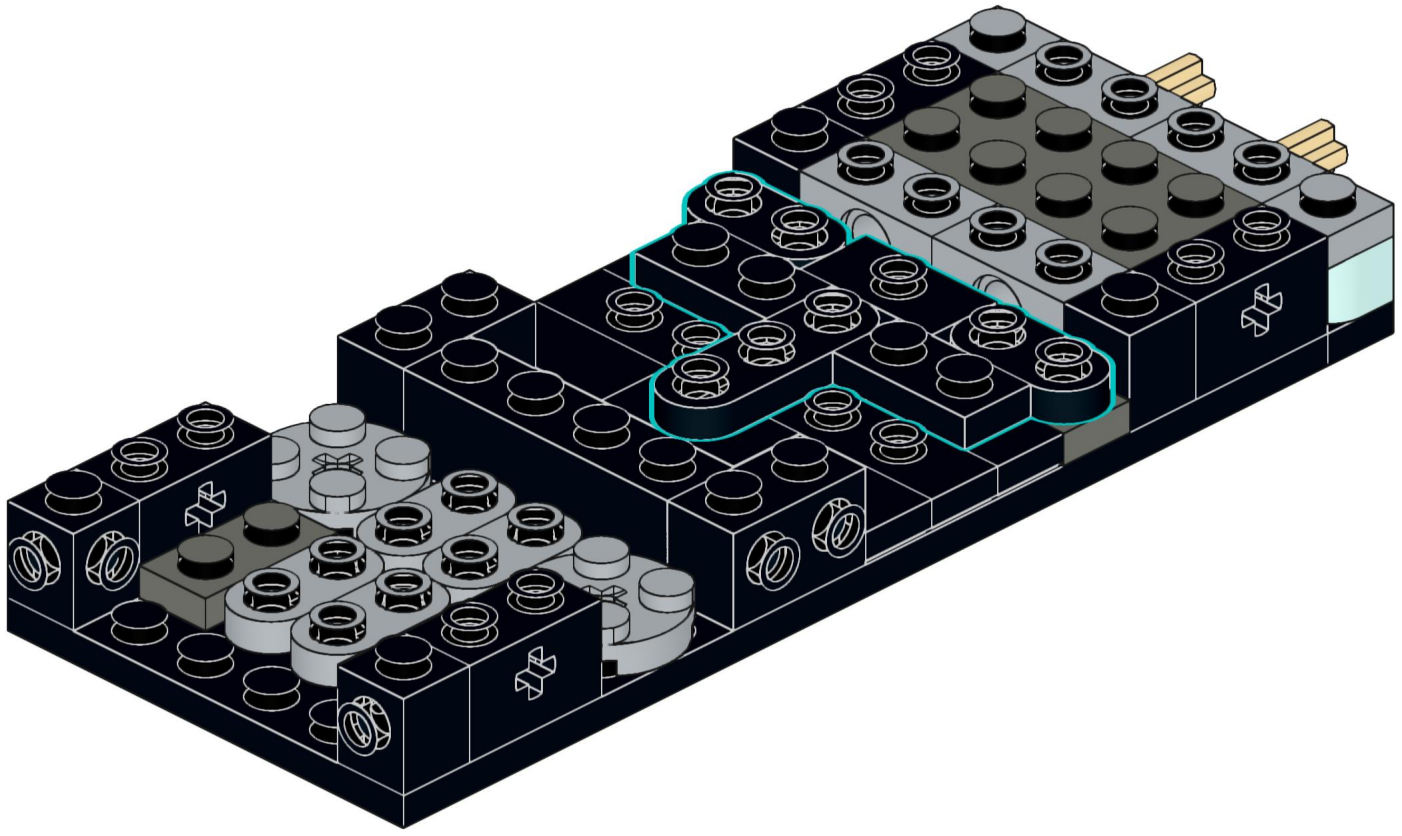

12

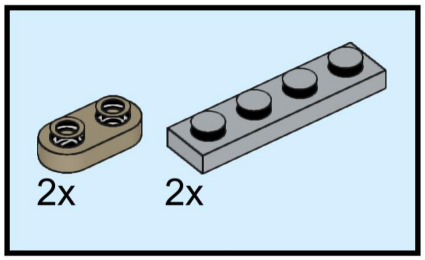

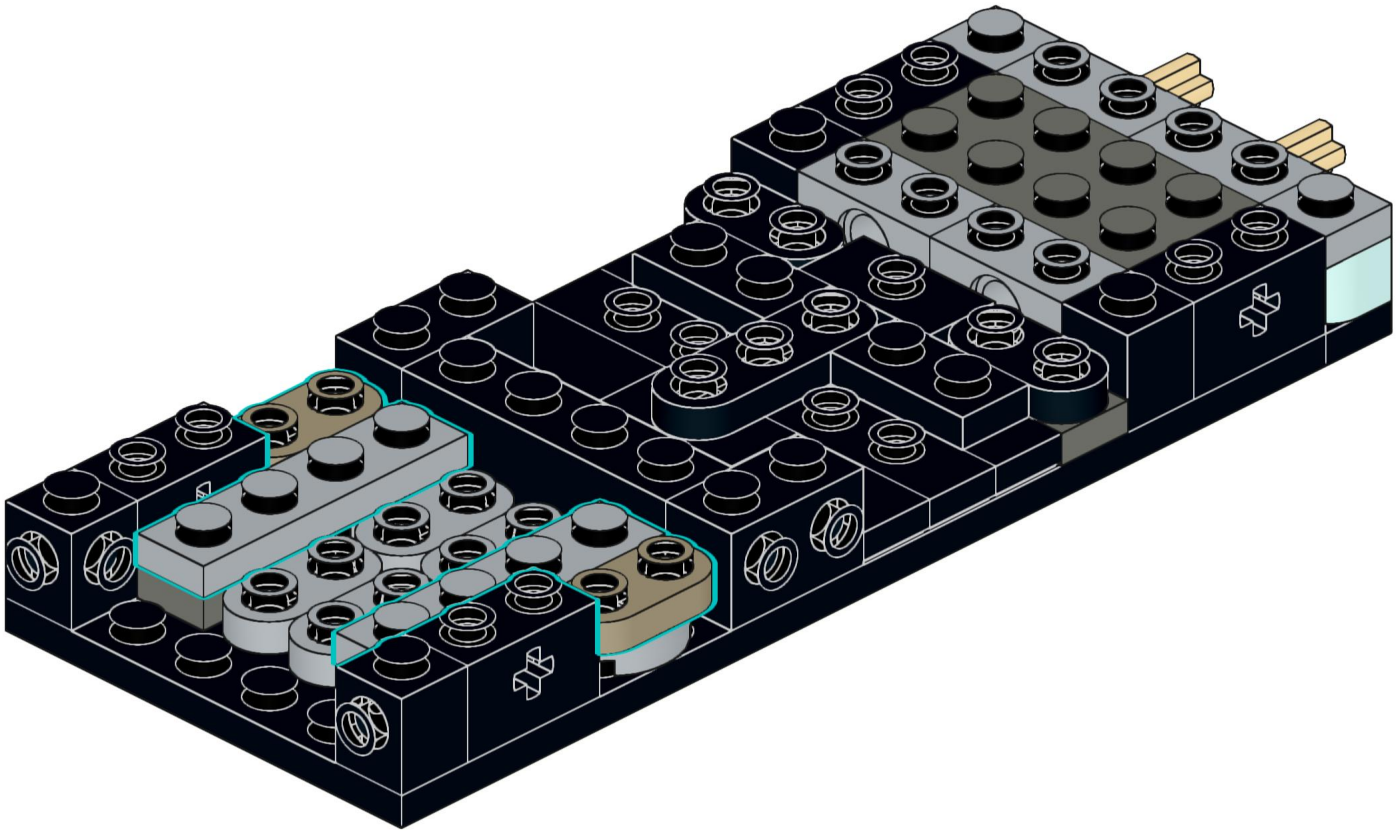

13

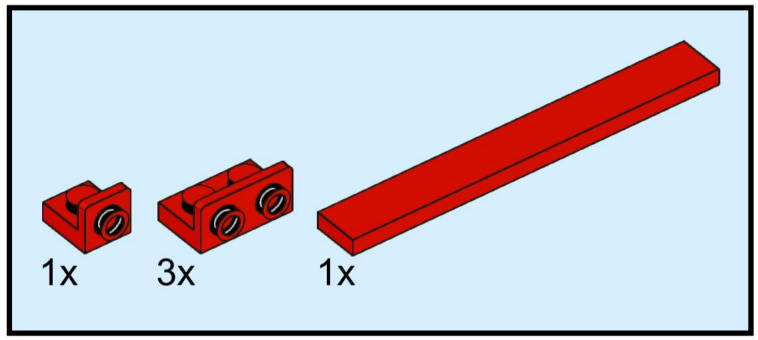

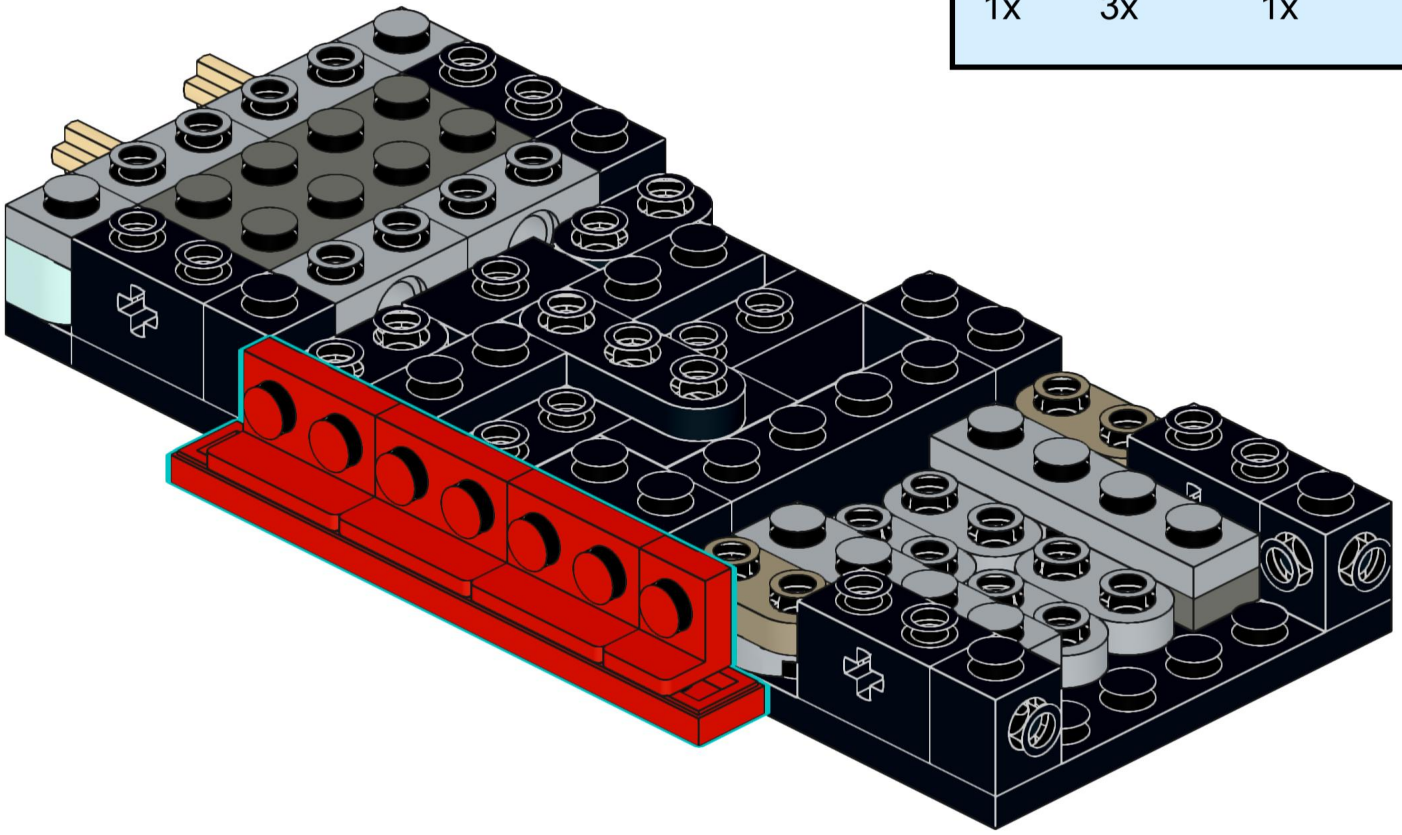

14

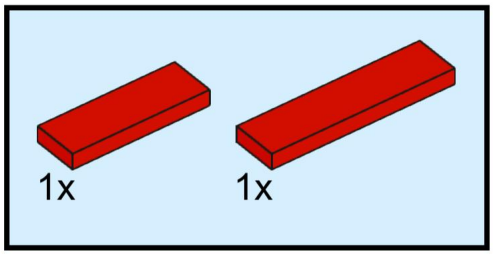

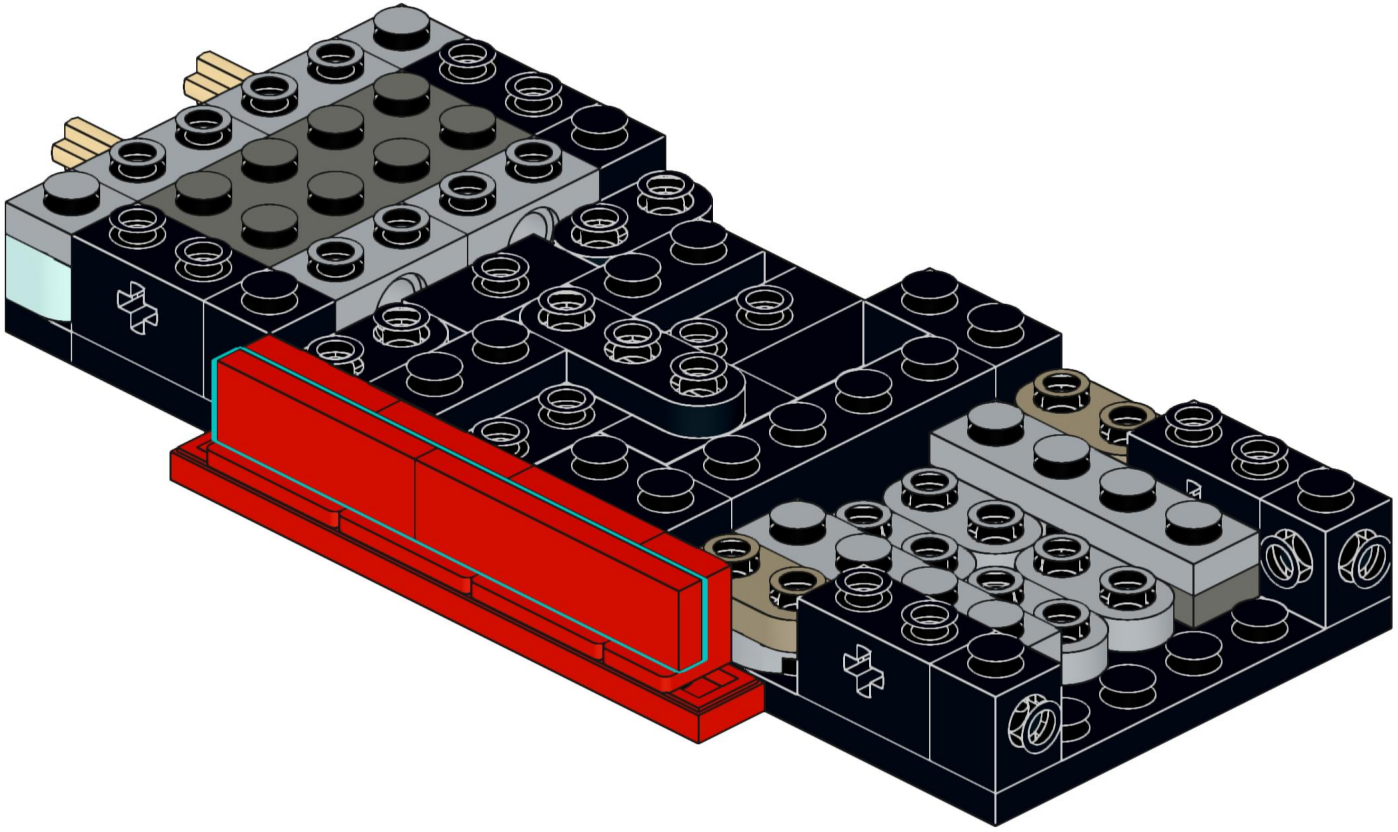

15

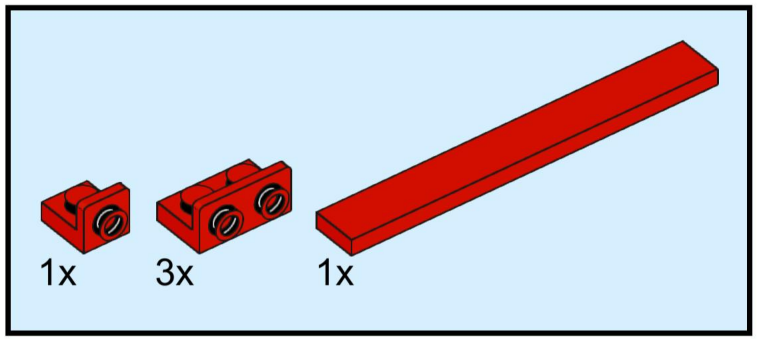

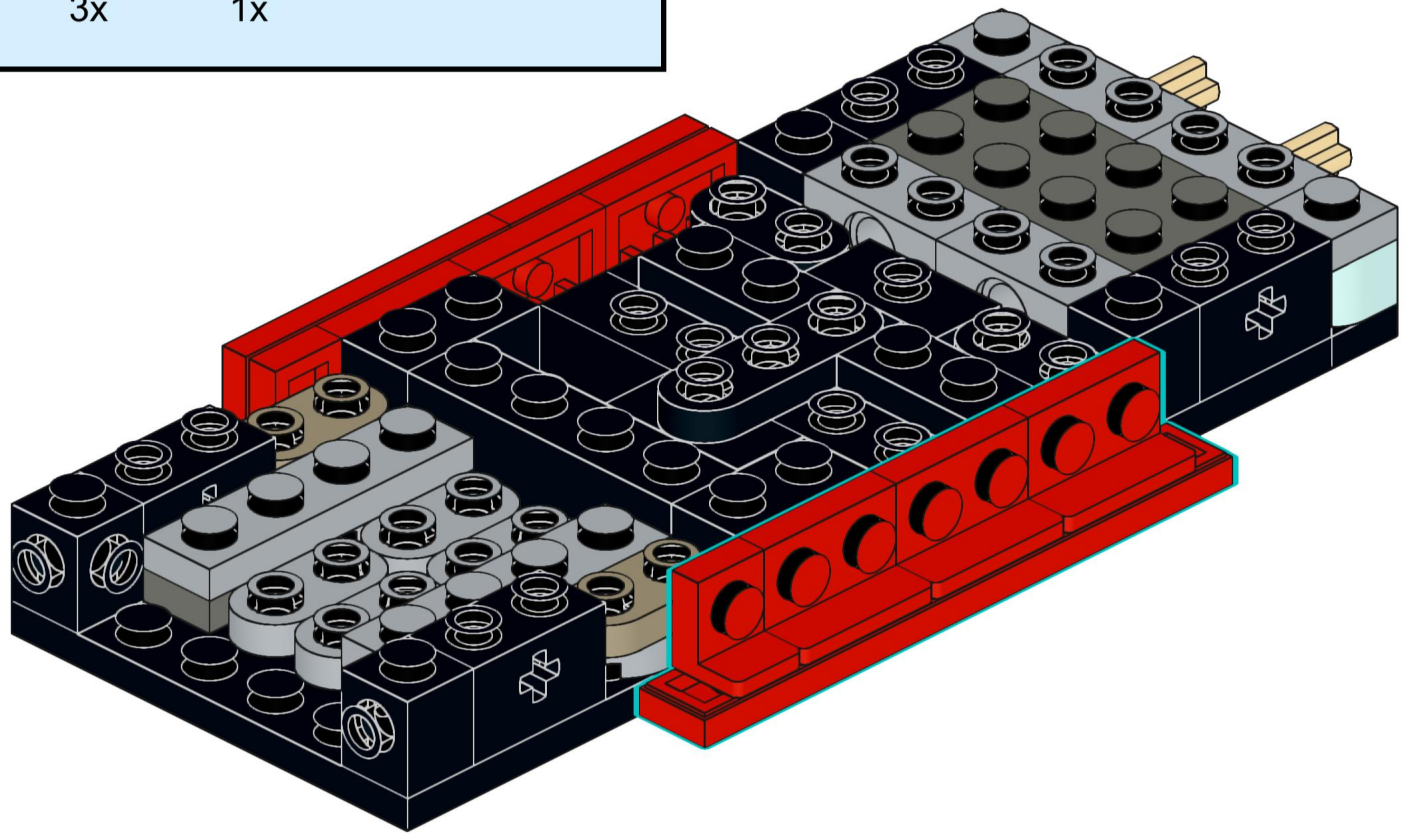

16

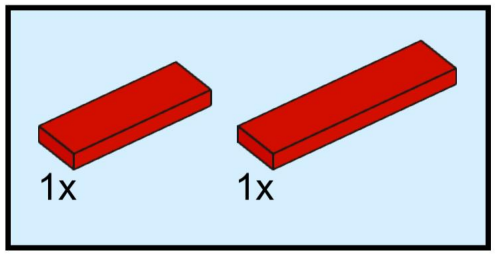

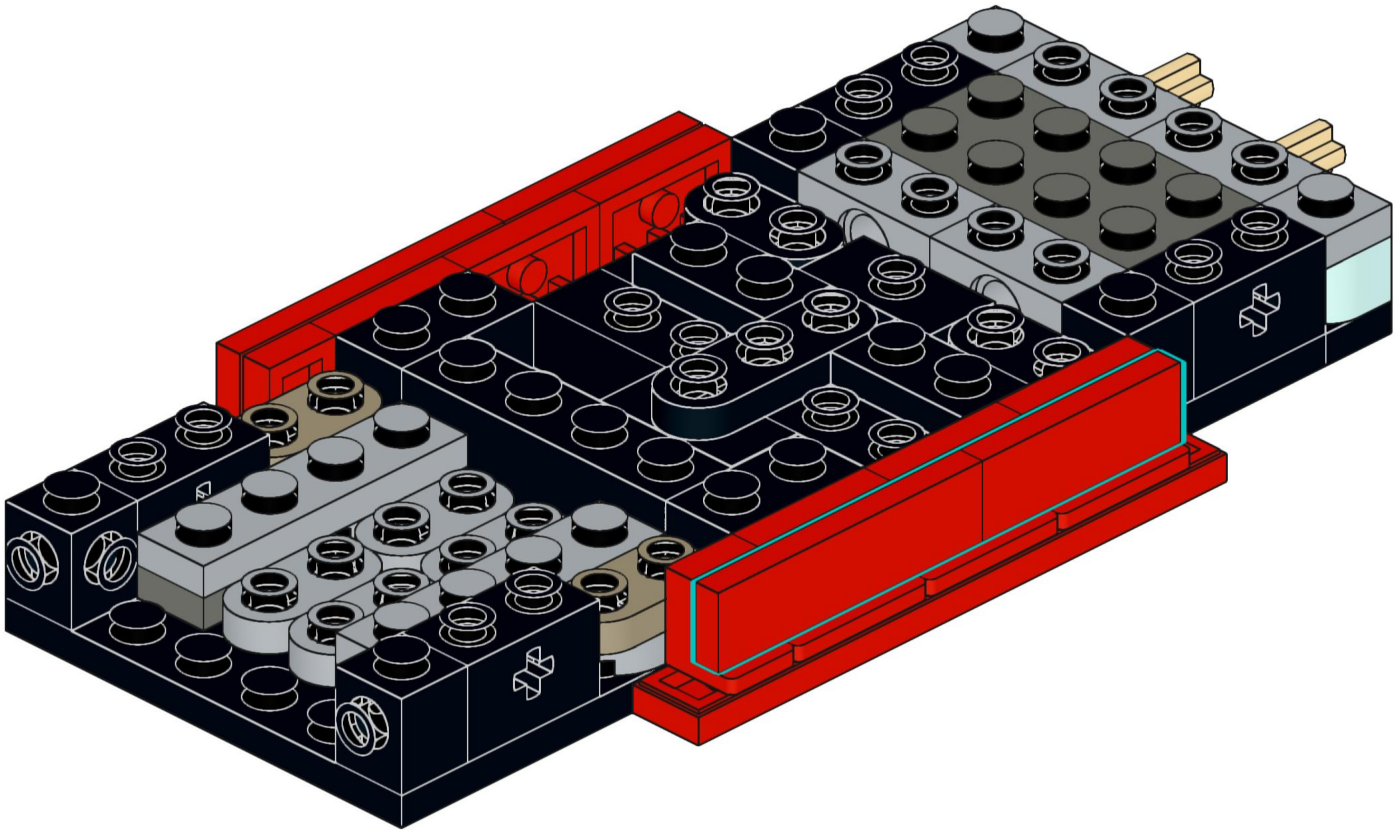

17

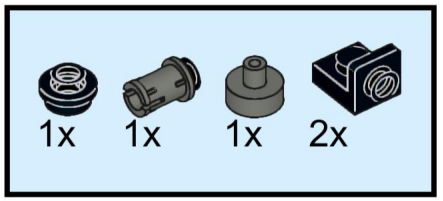

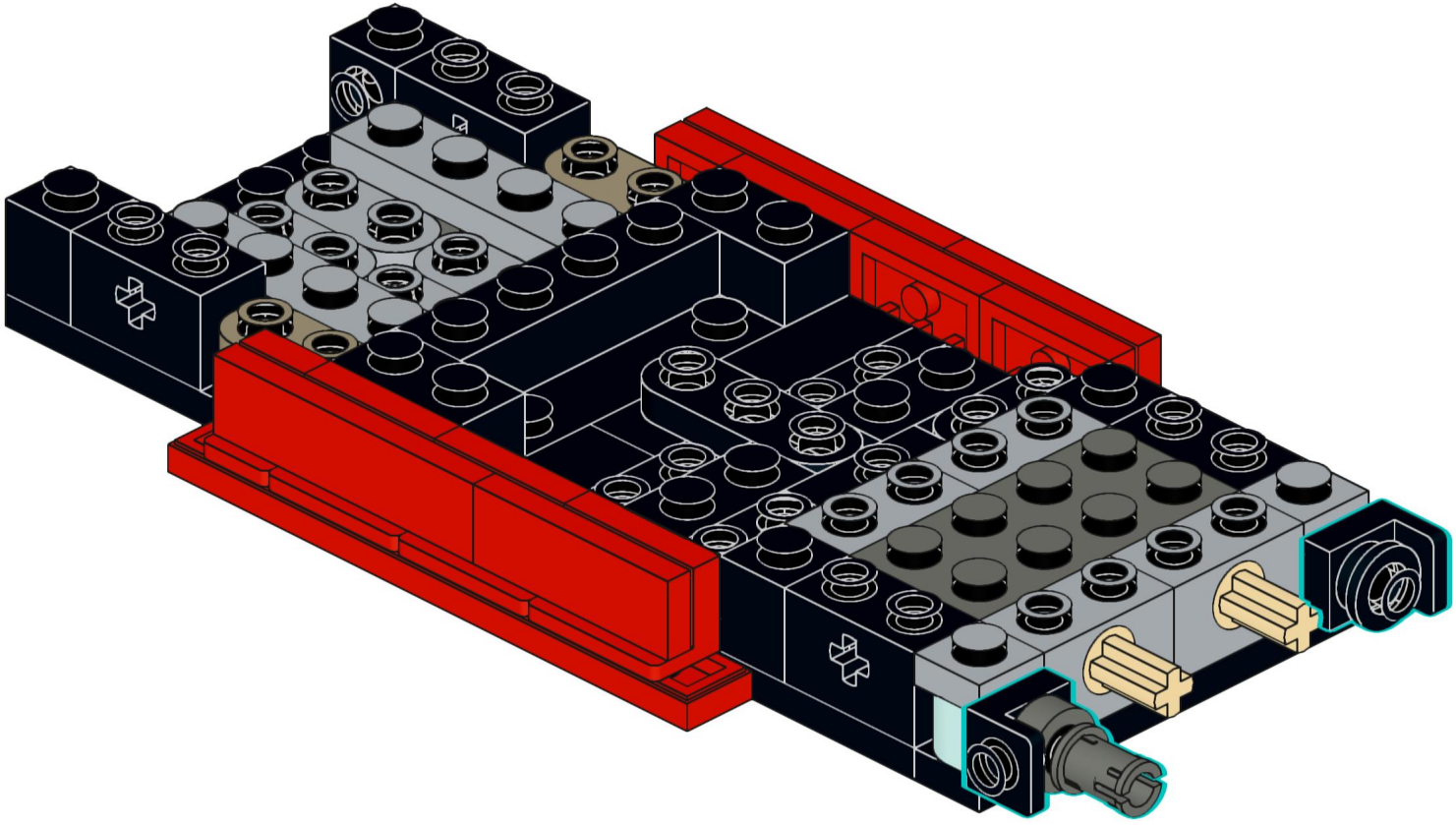

18

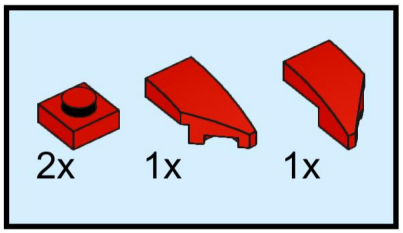

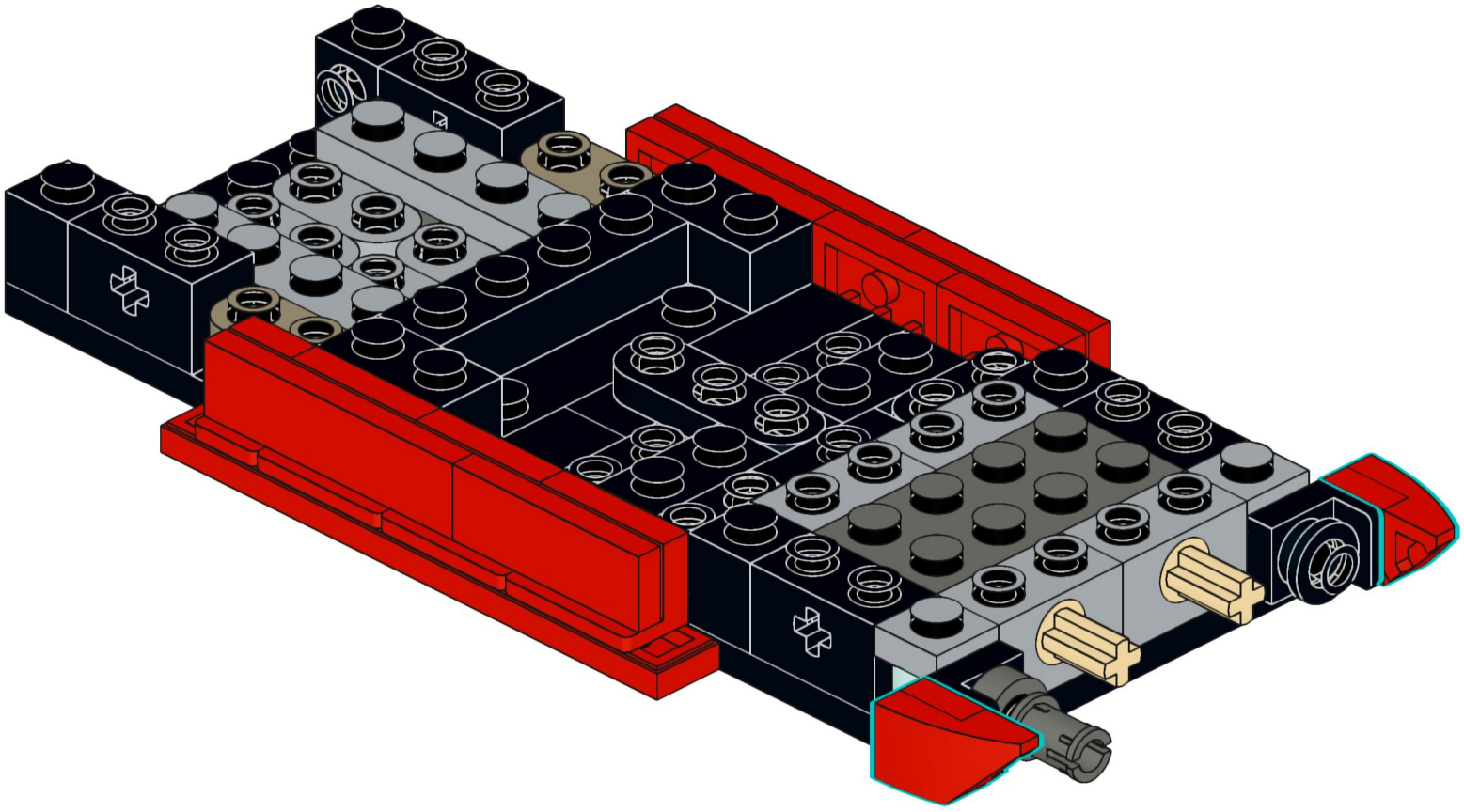

19

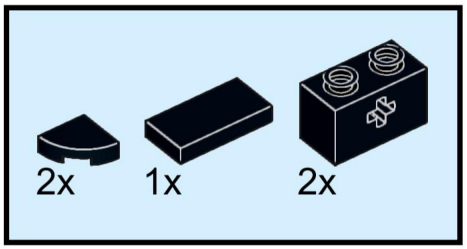

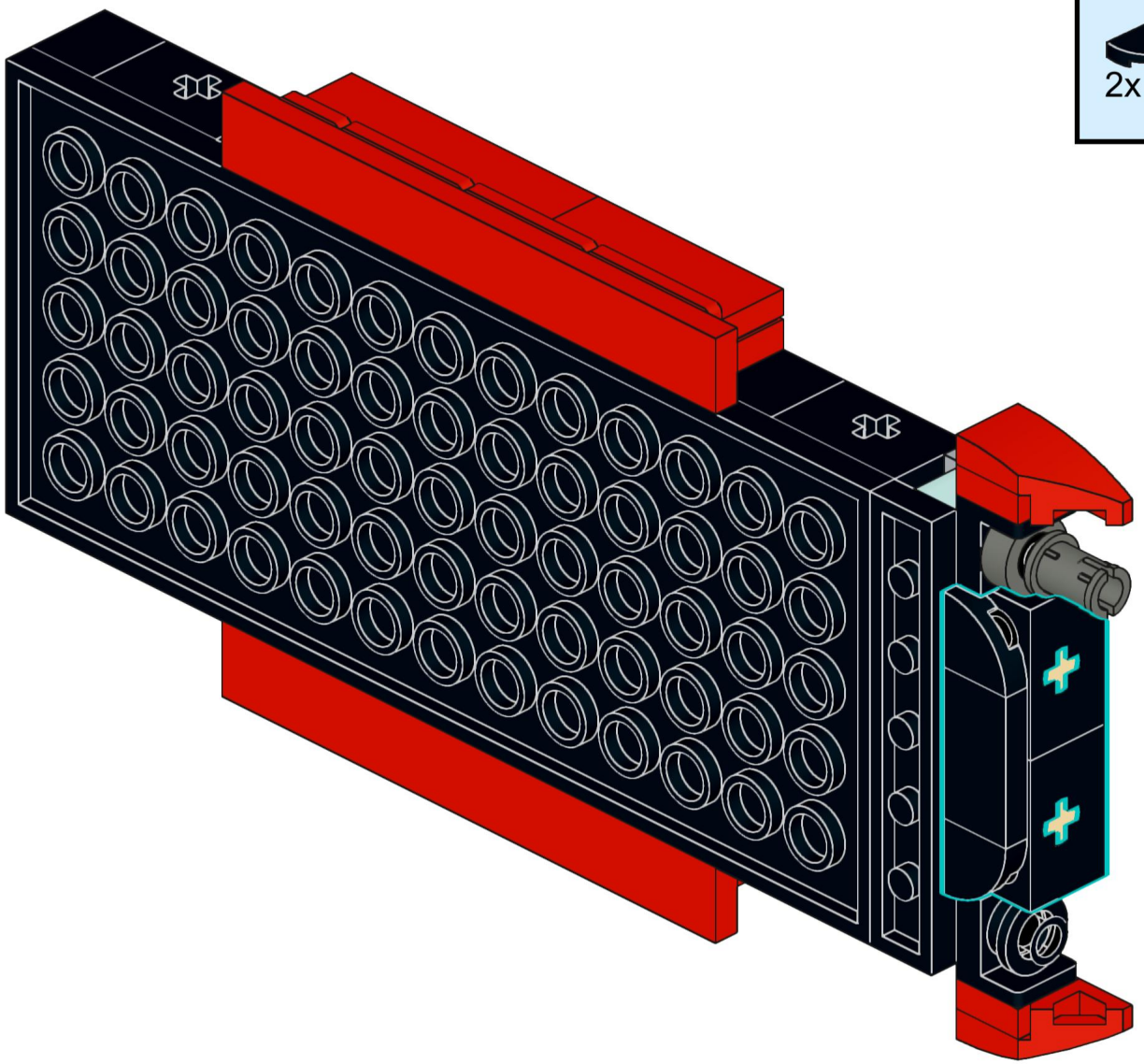

20

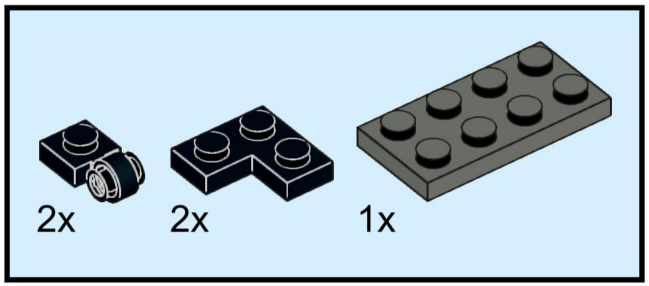

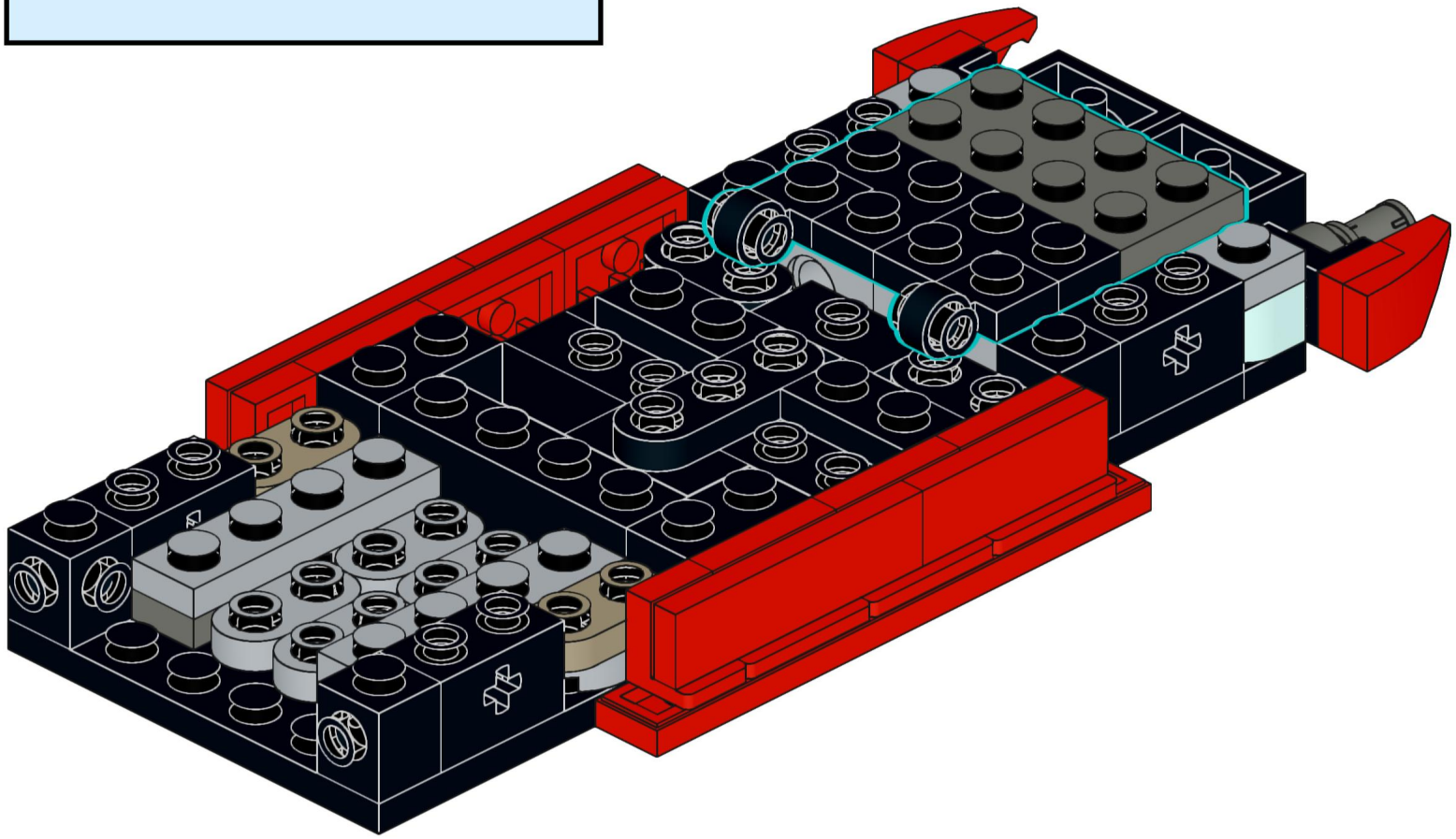

21

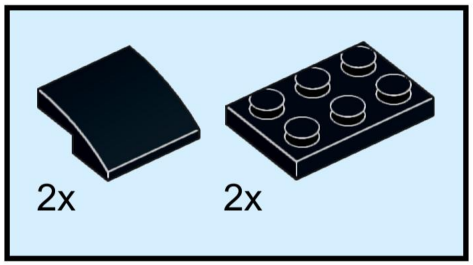

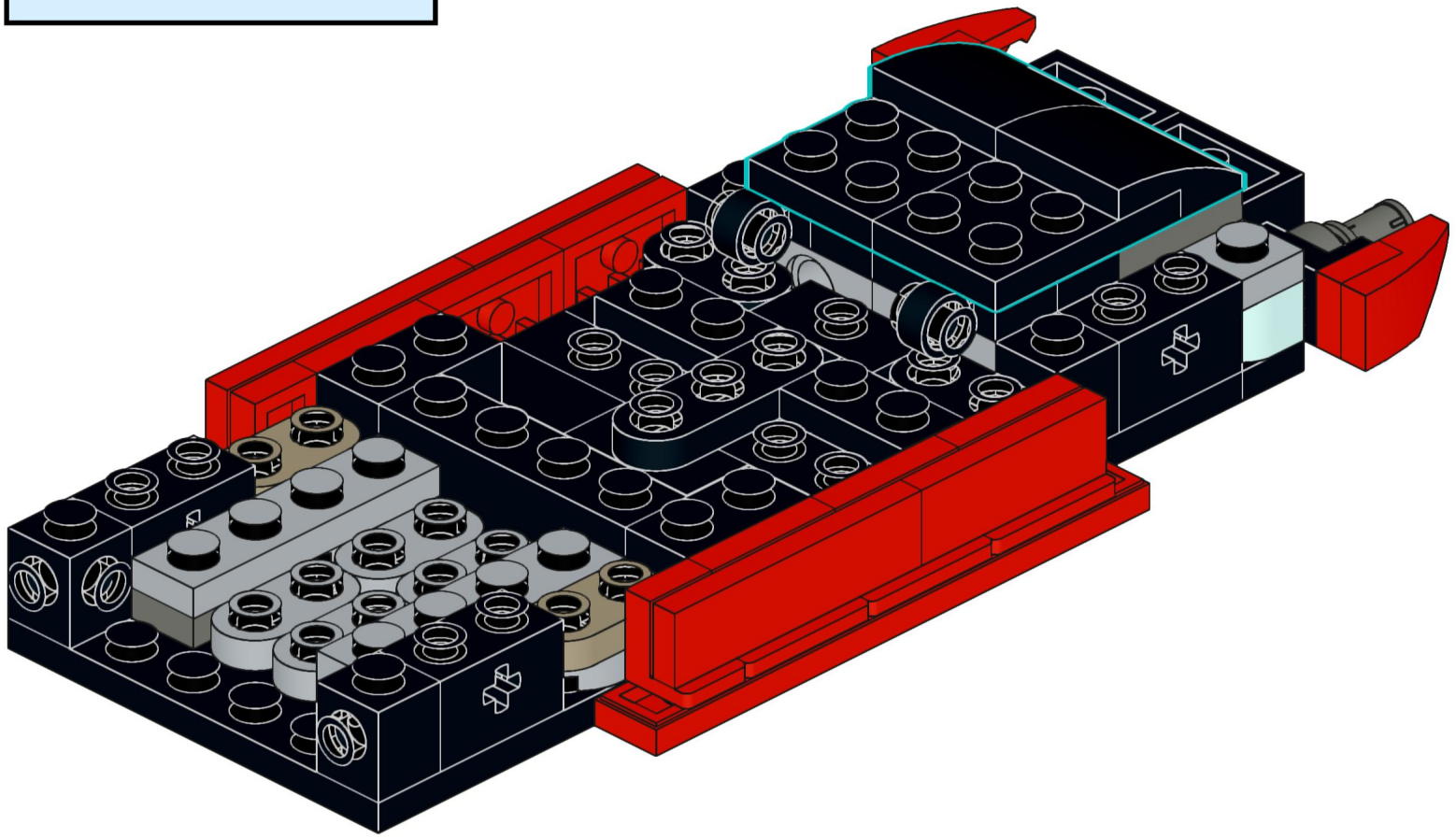

22

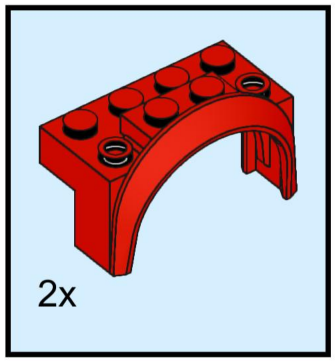

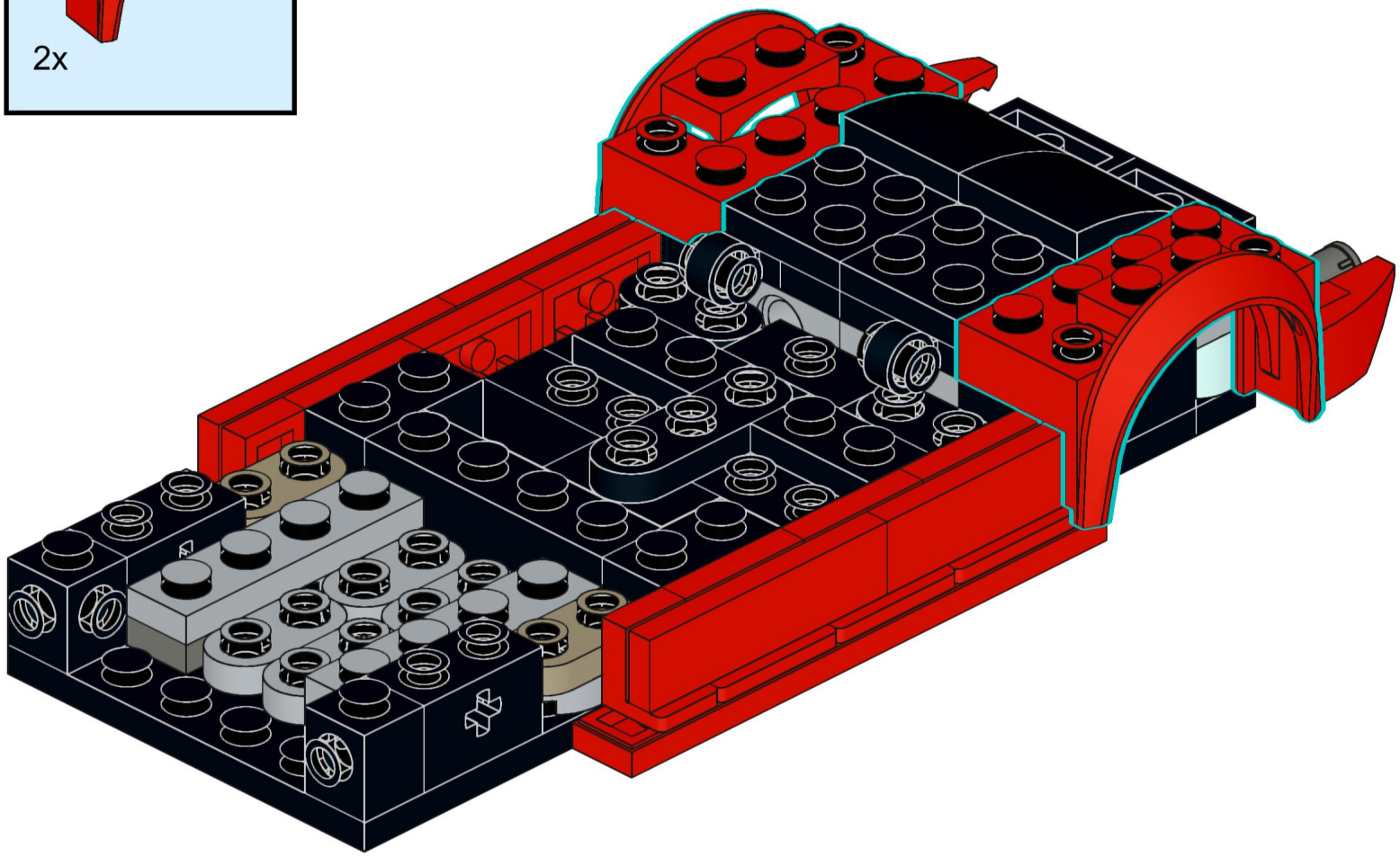

23

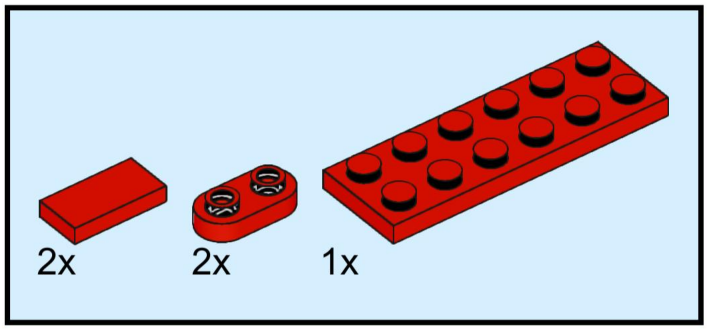

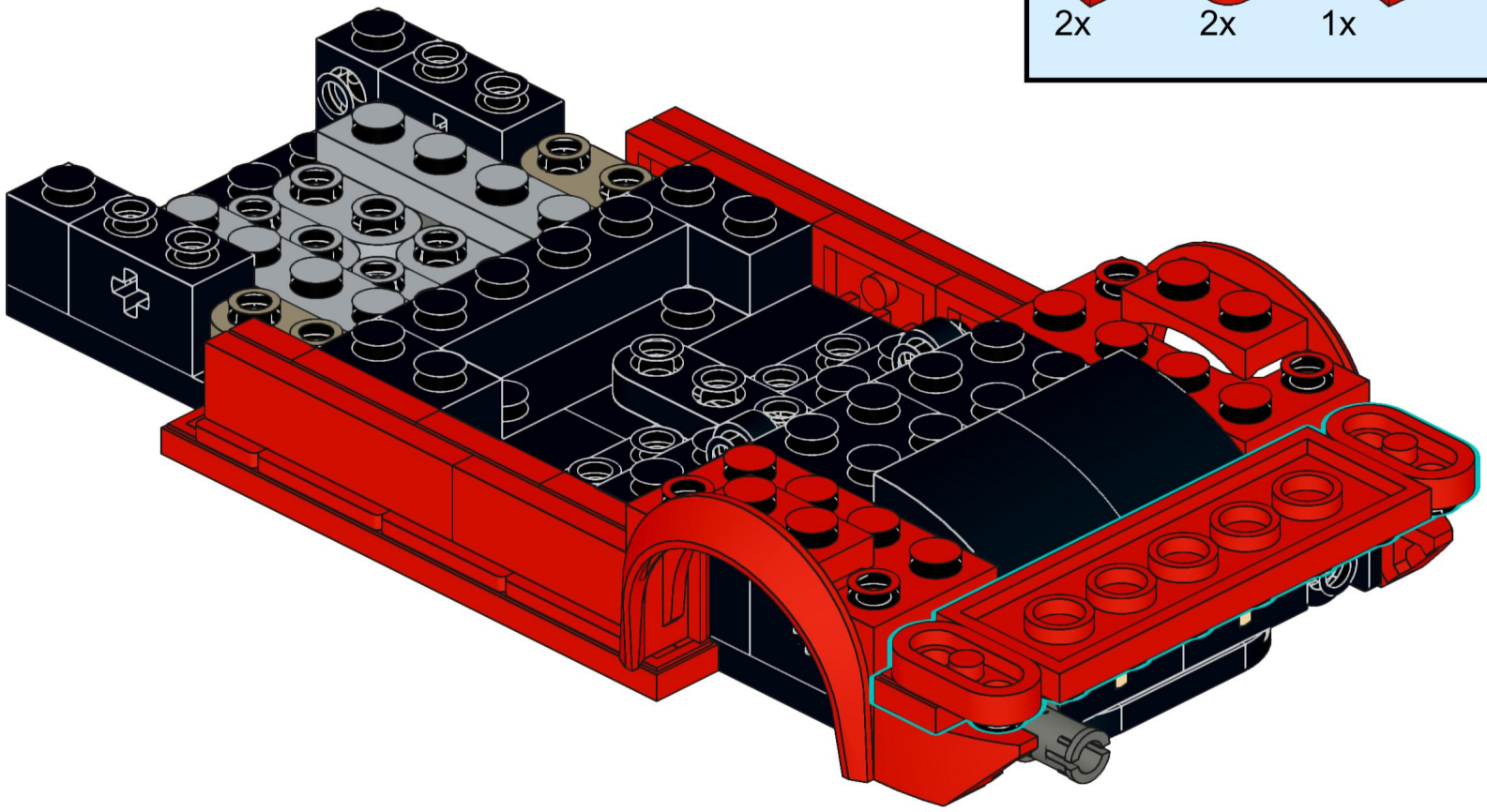

24

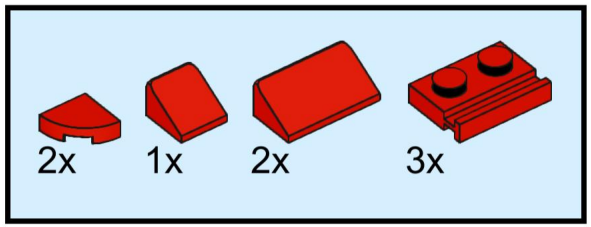

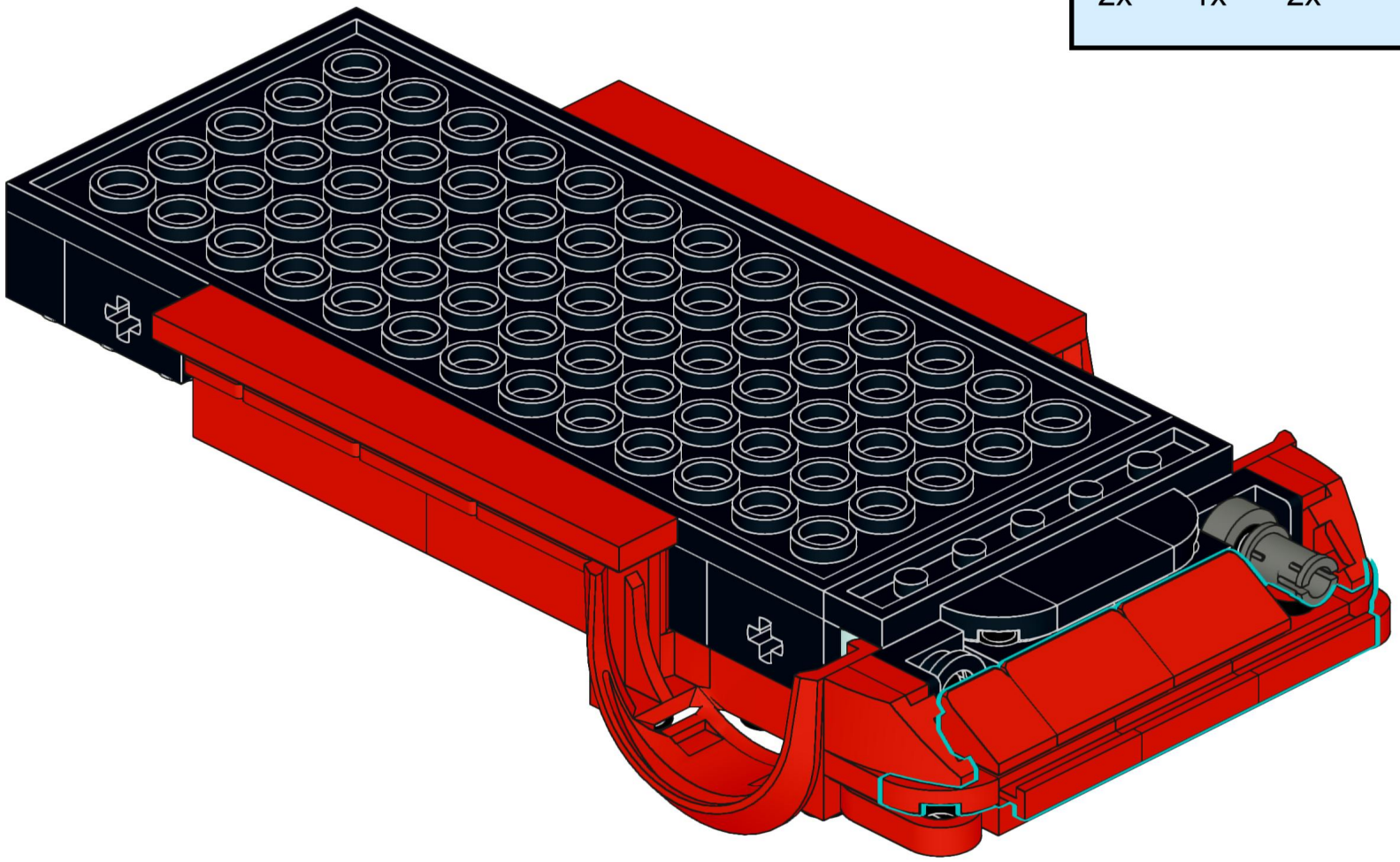

25

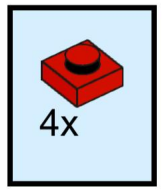

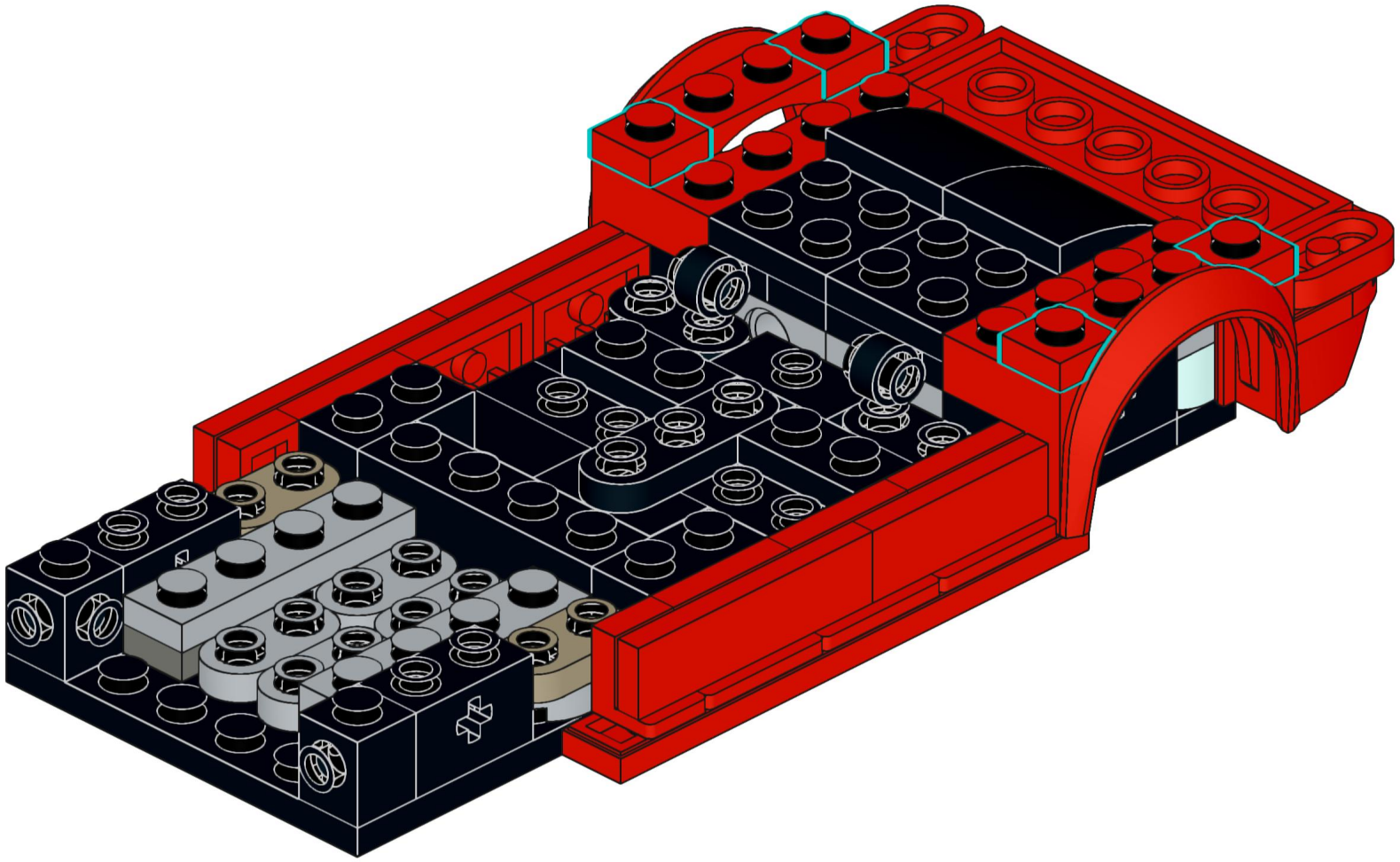

26

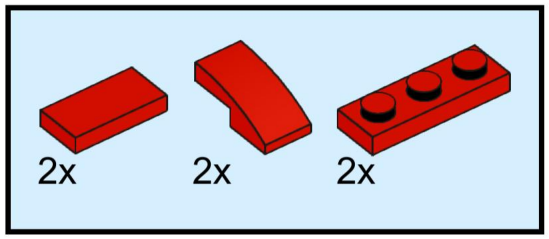

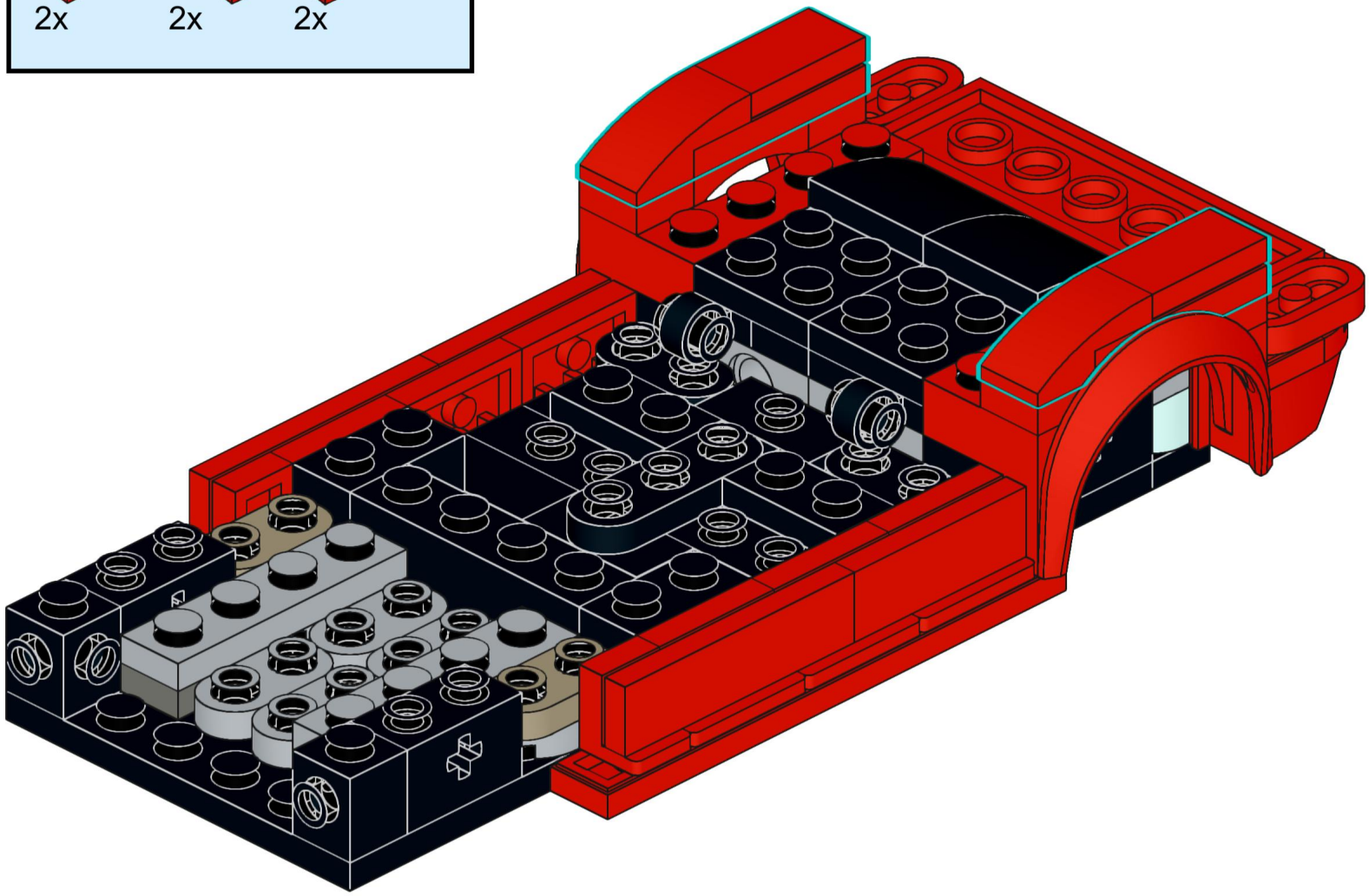

27

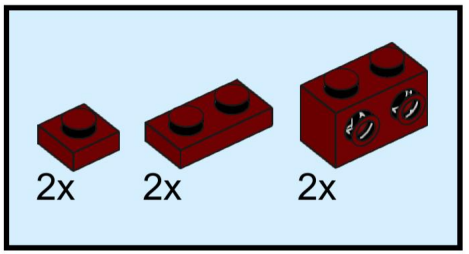

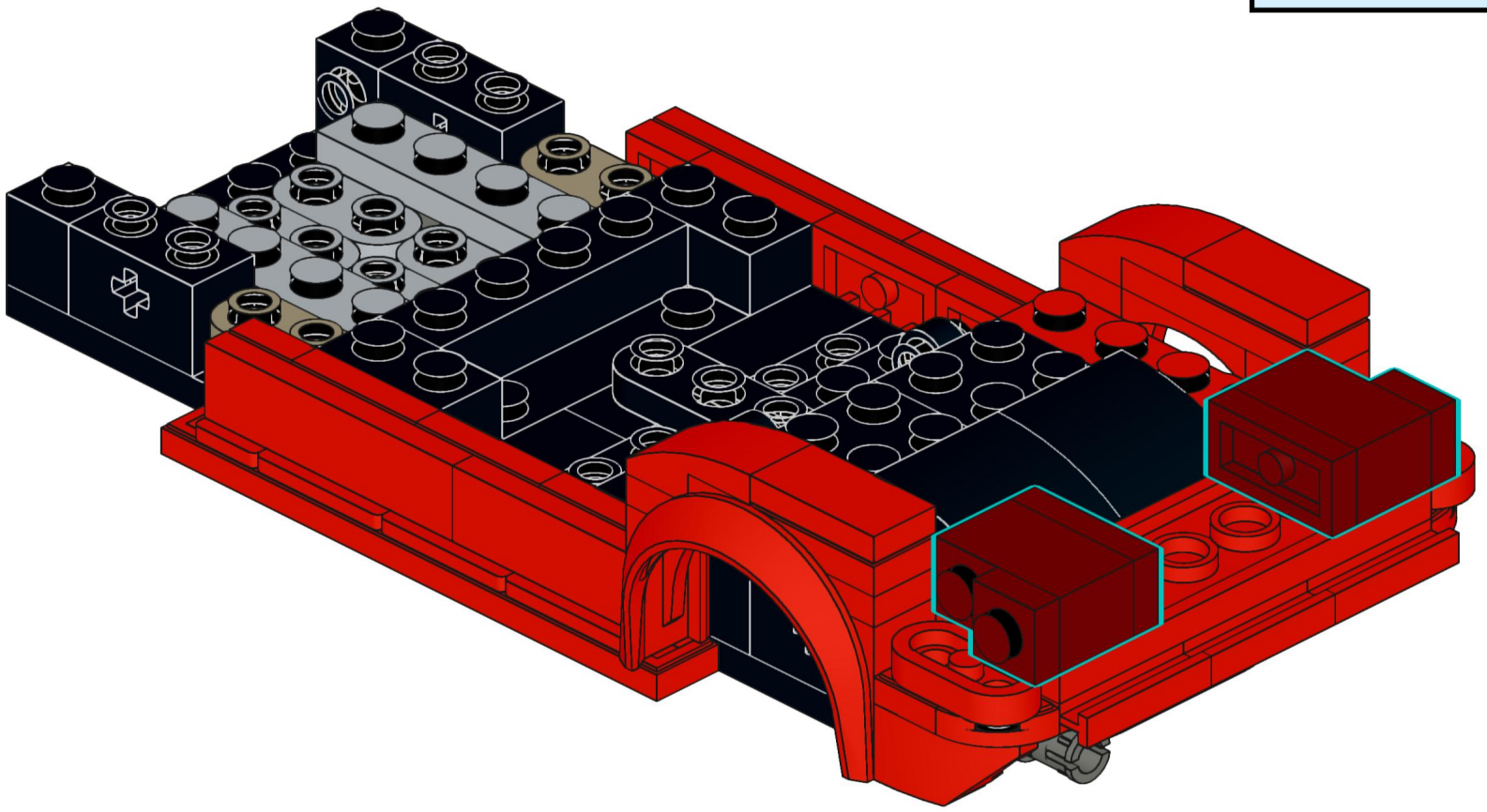

28

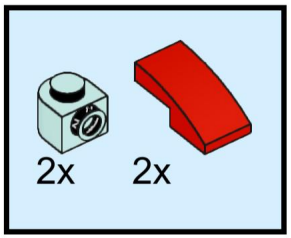

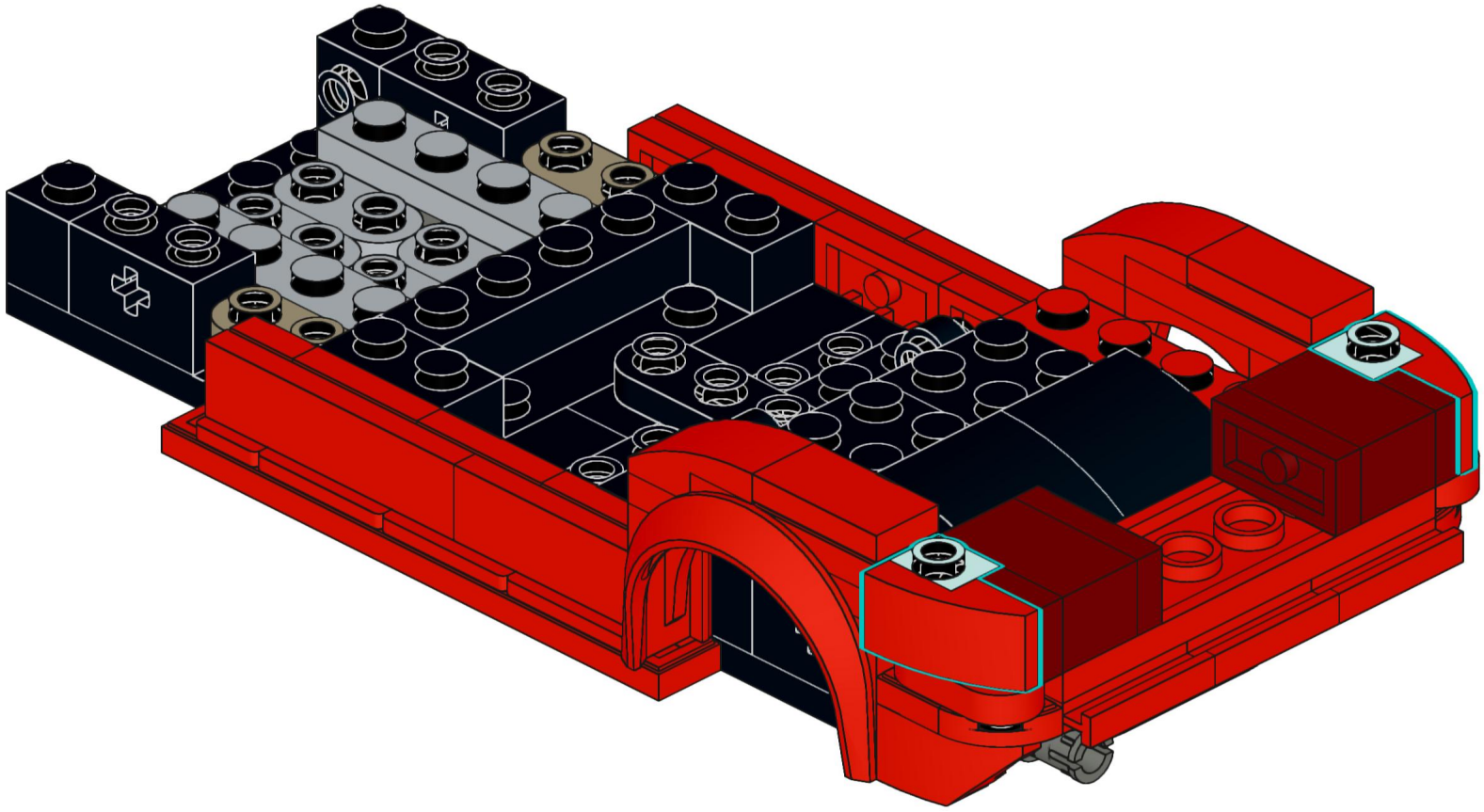

29

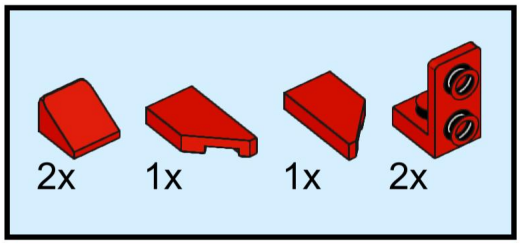

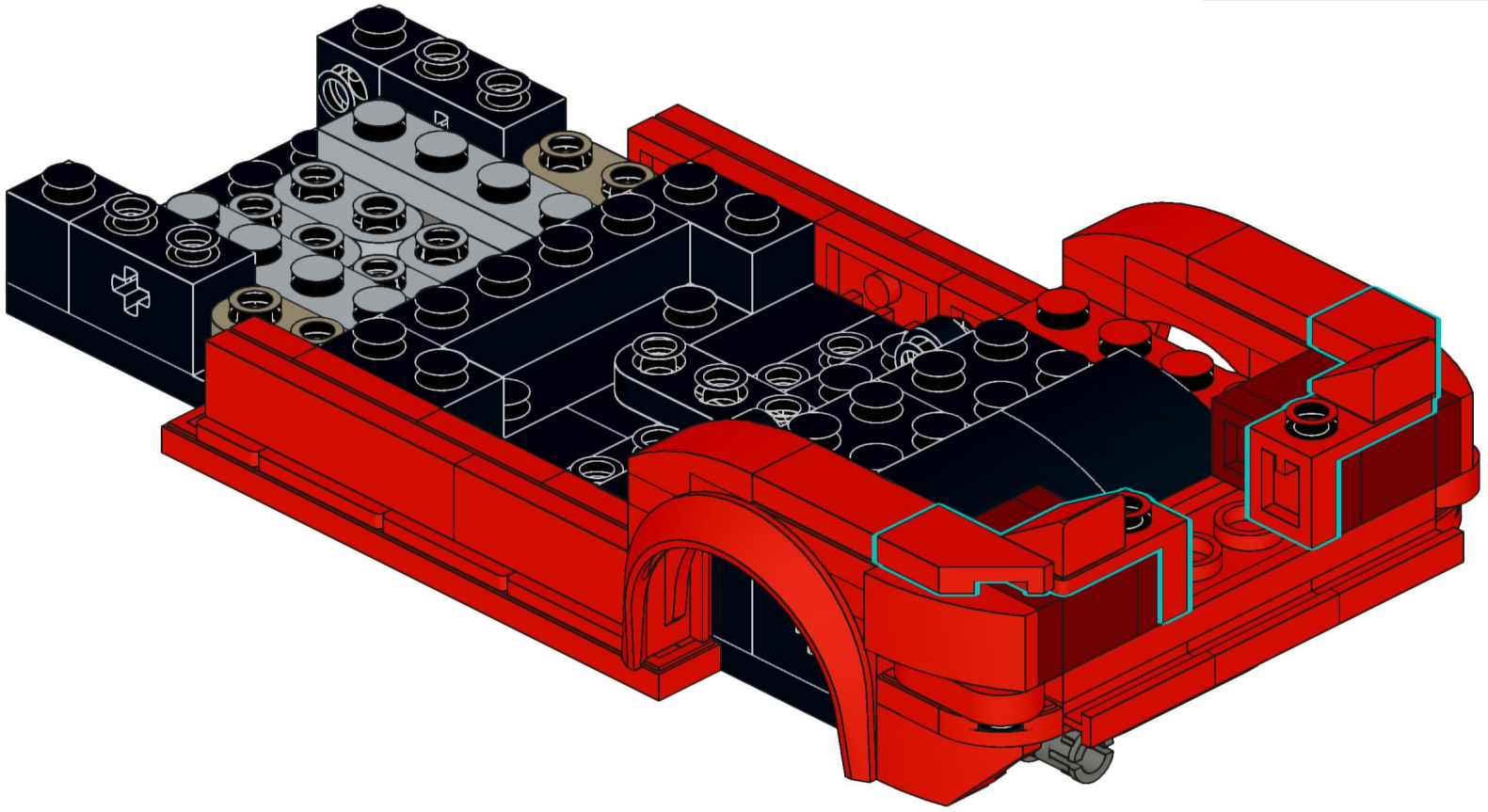

30

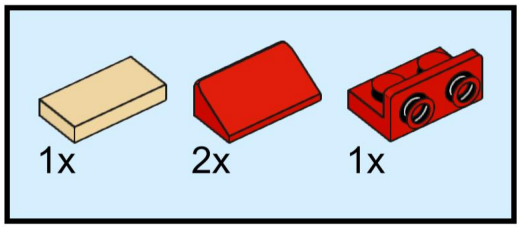

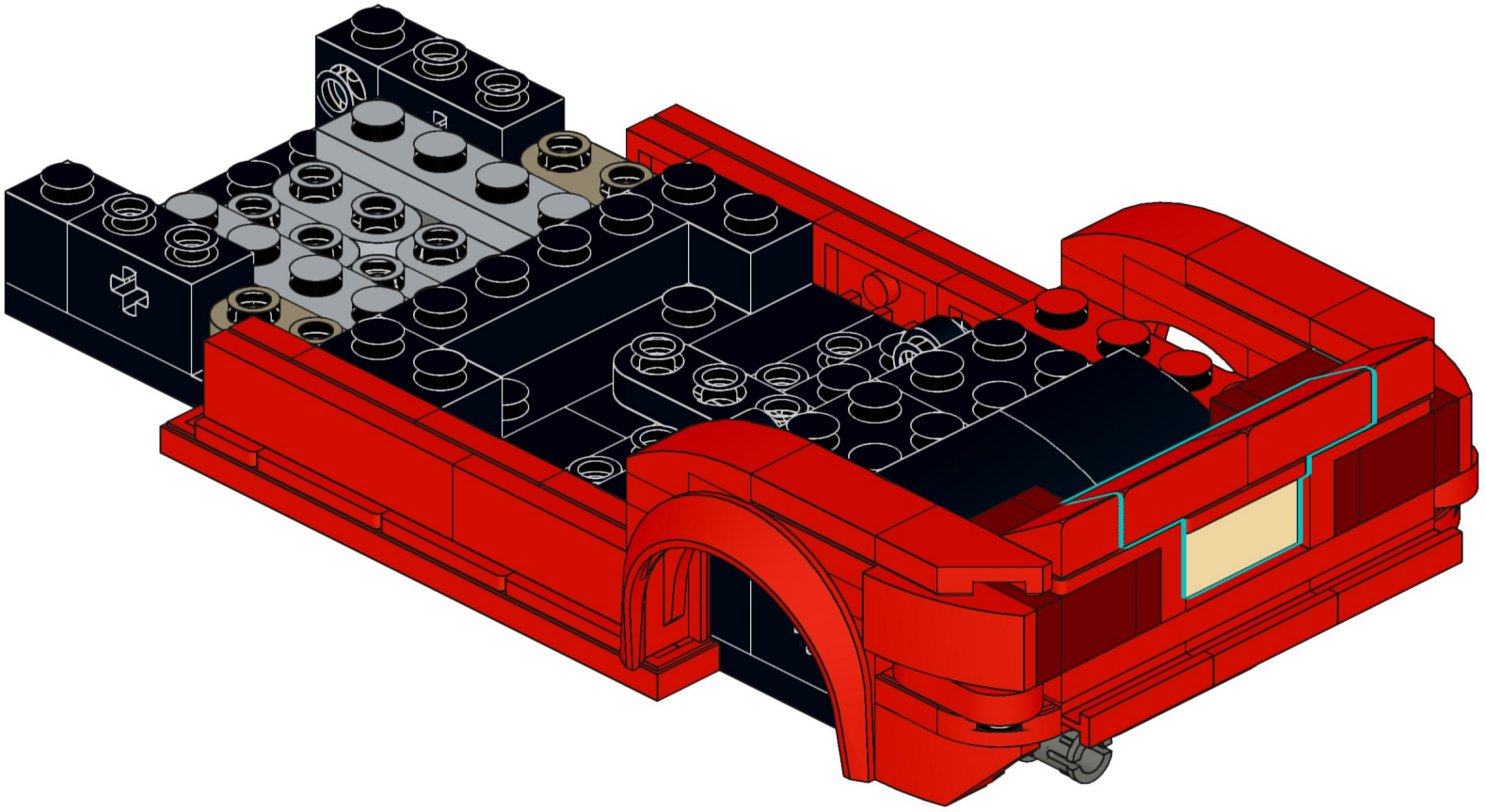

31

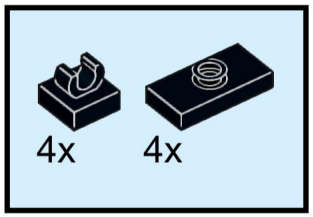

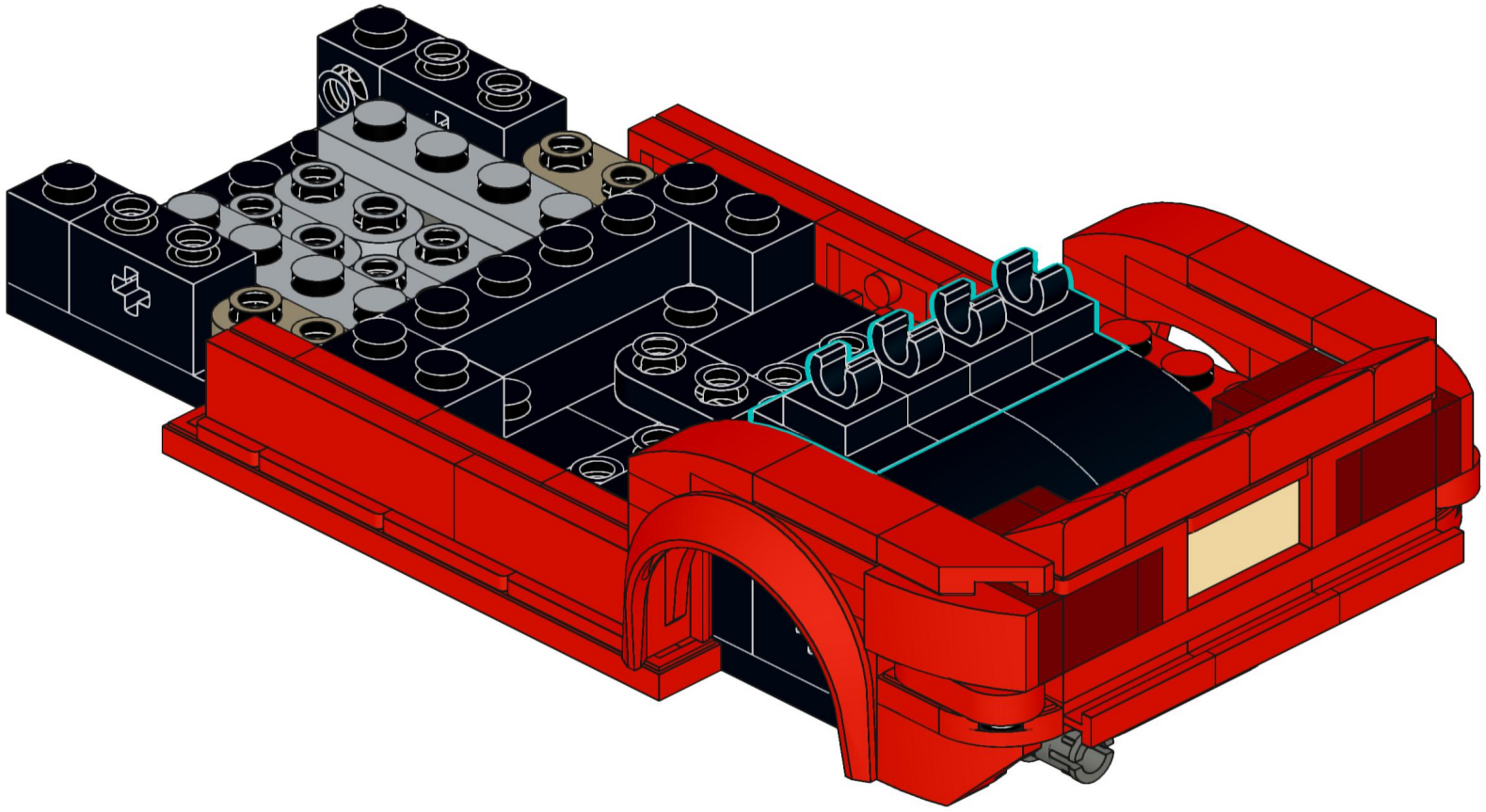

32

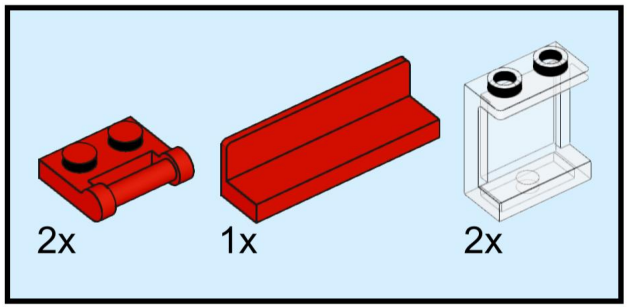

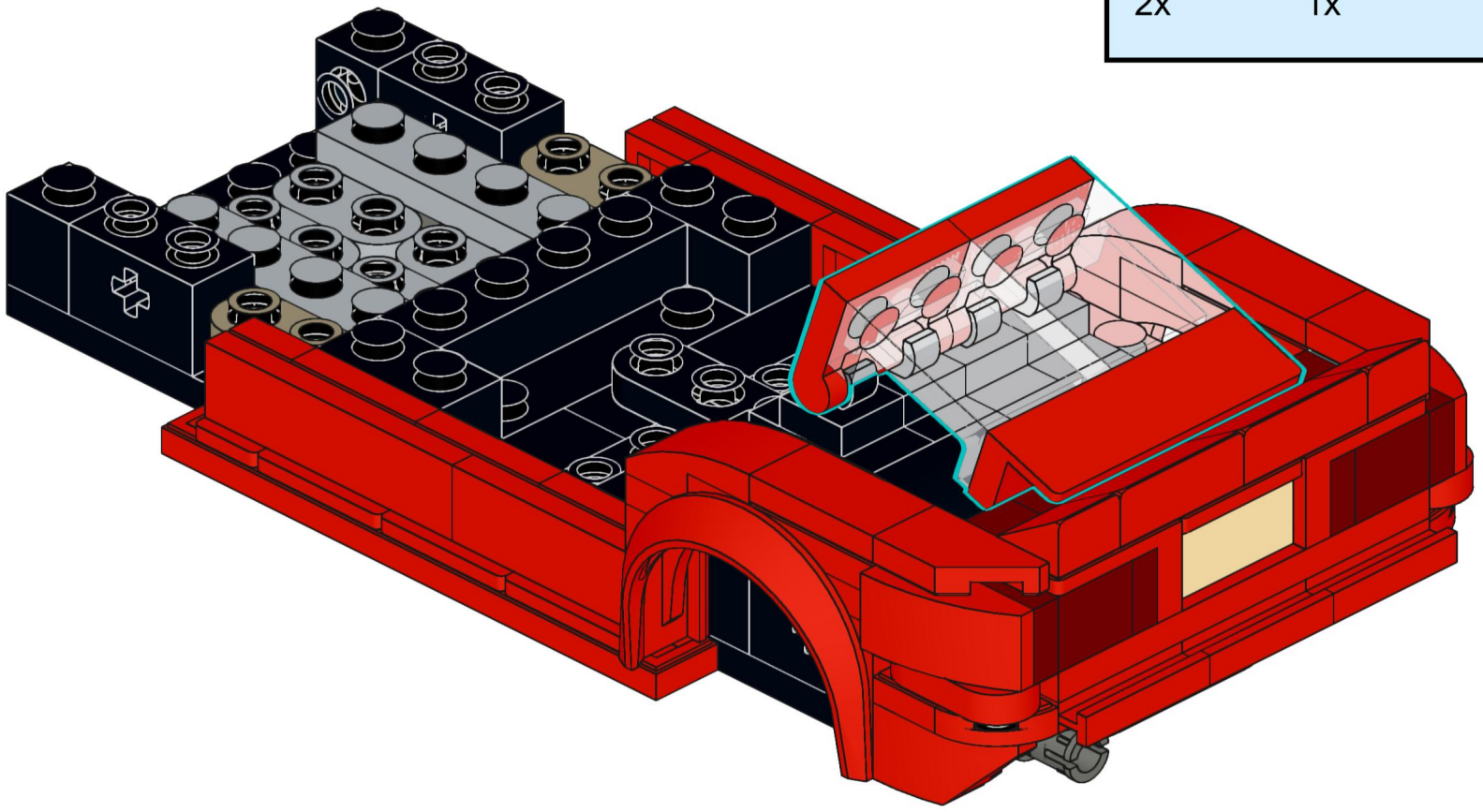

33

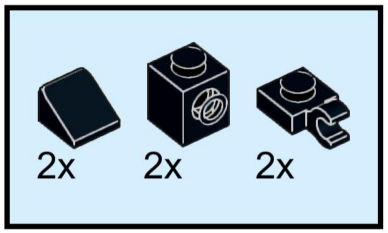

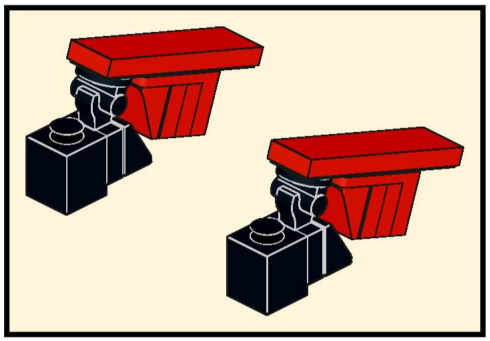

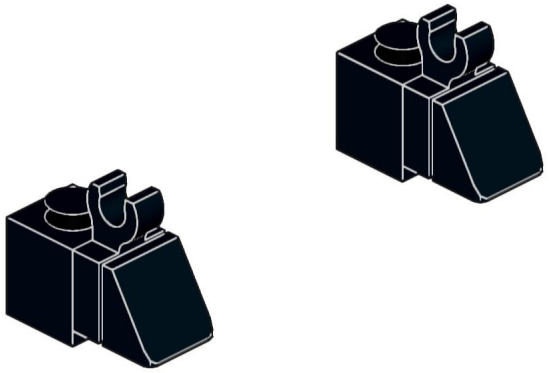

34

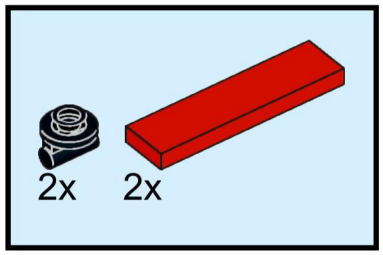

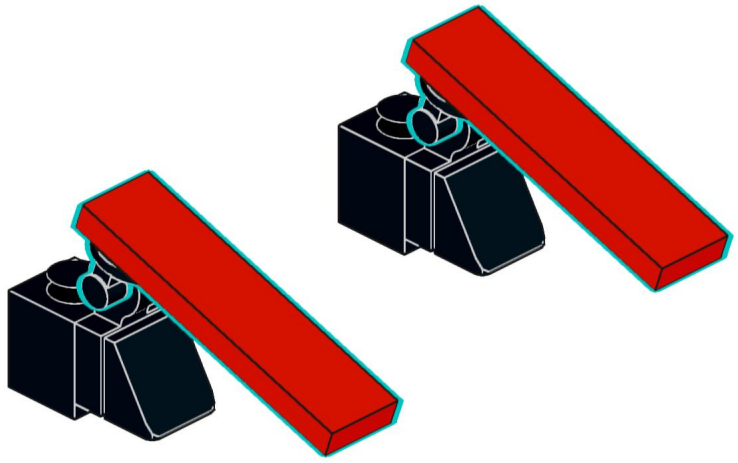

35

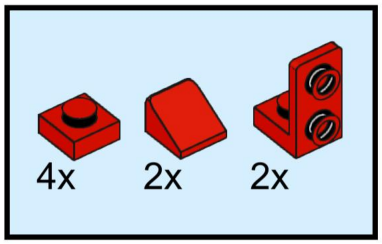

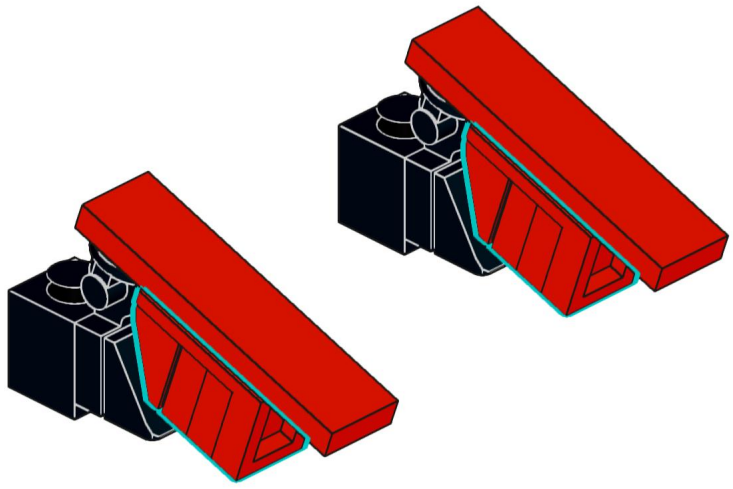

36

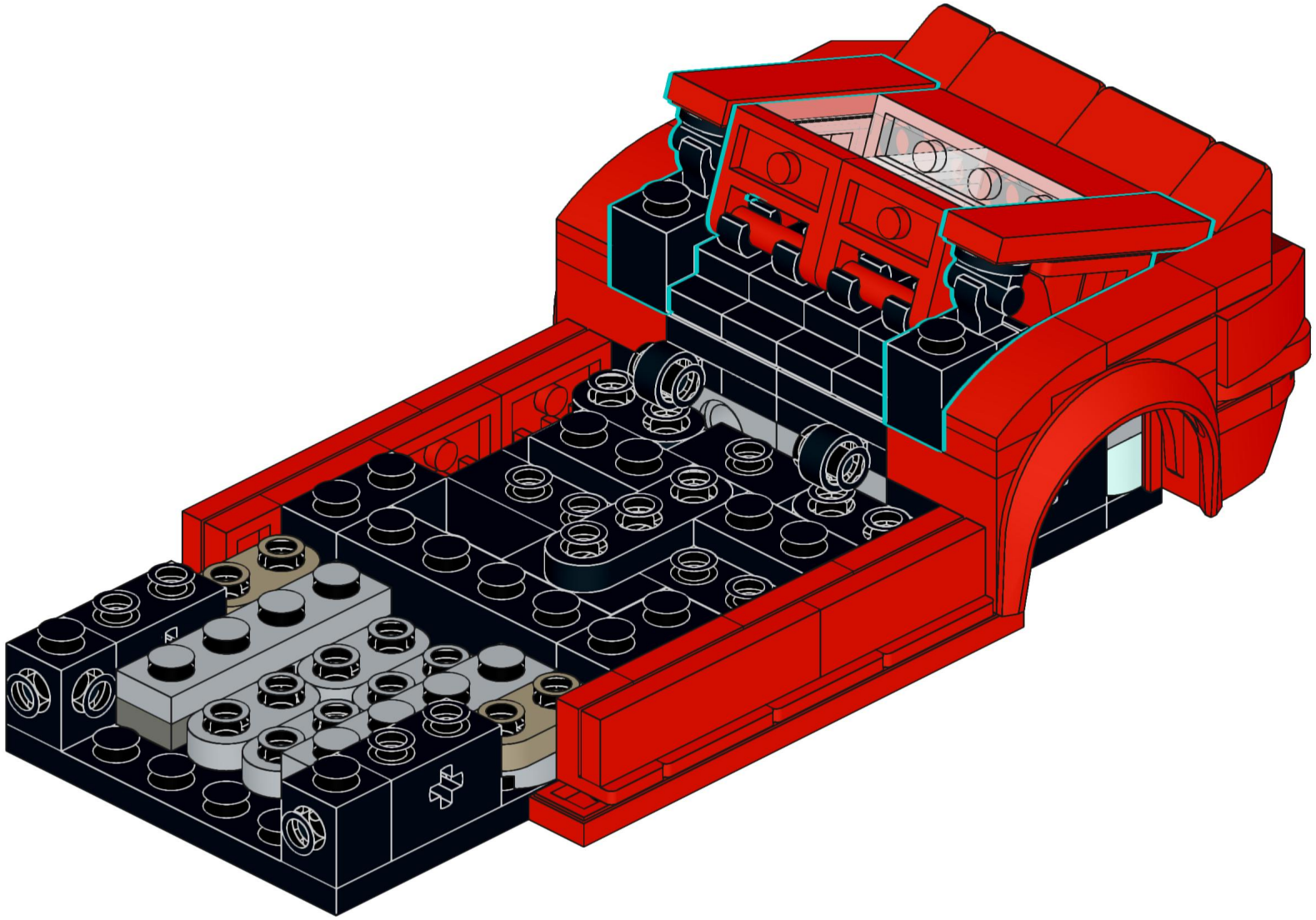

37

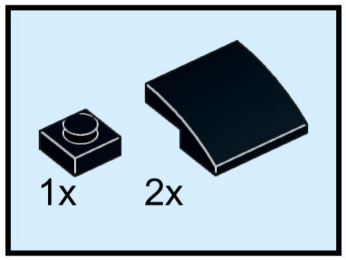

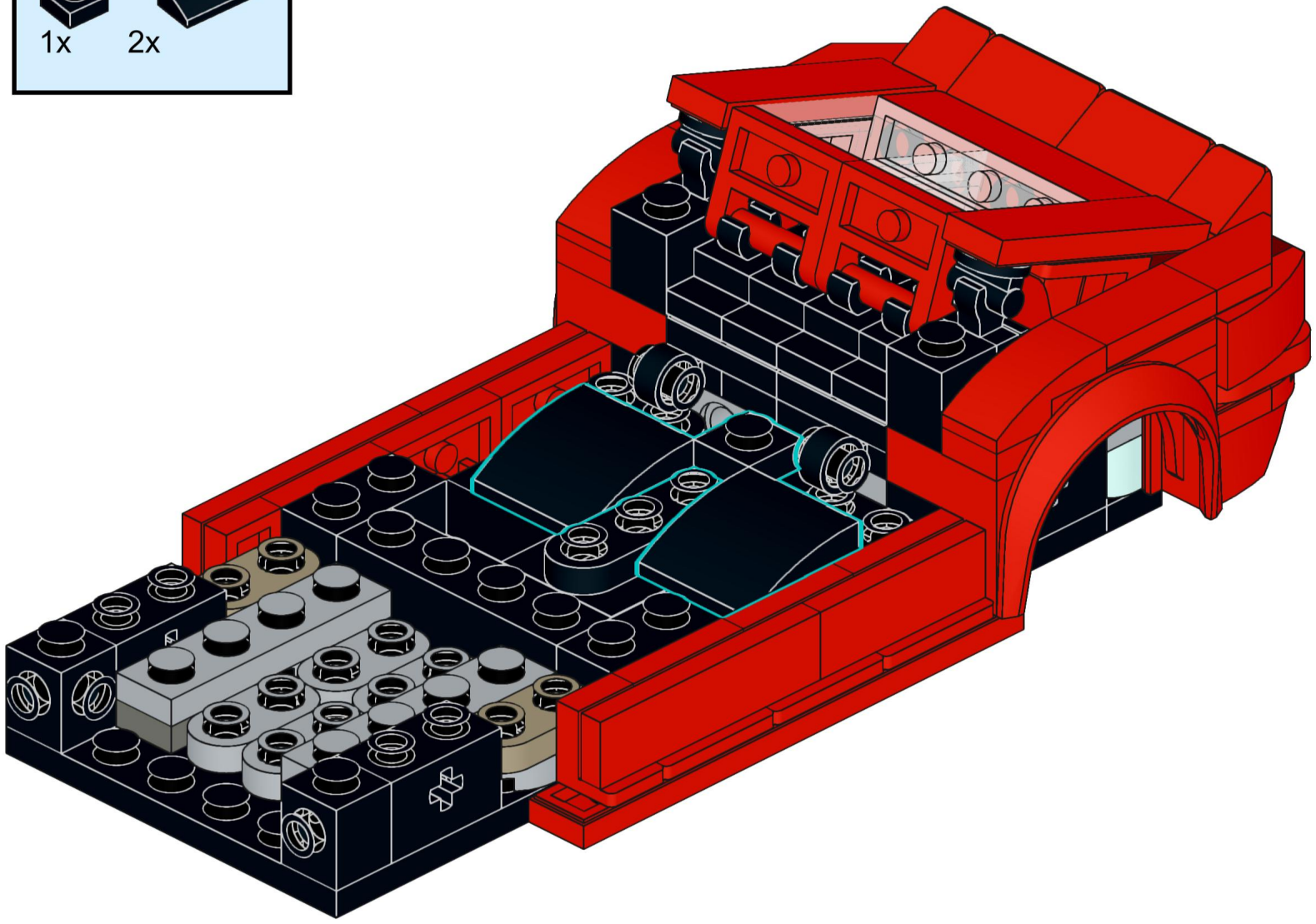

38

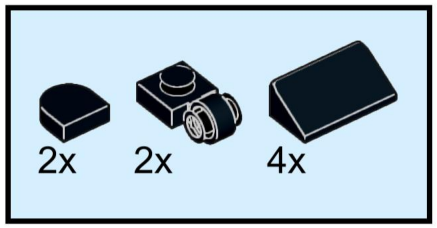

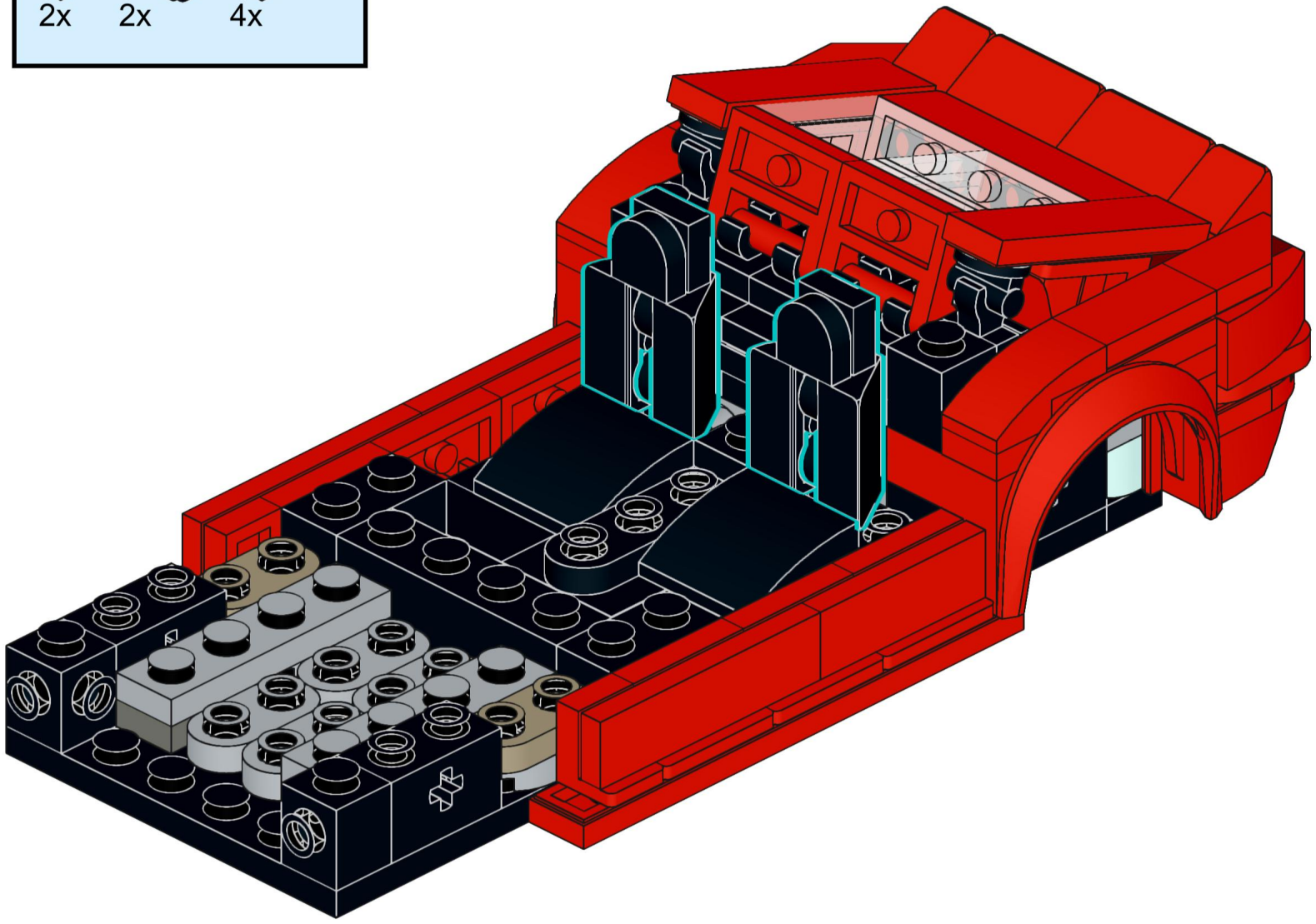

39

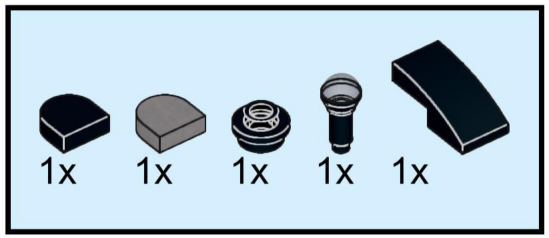

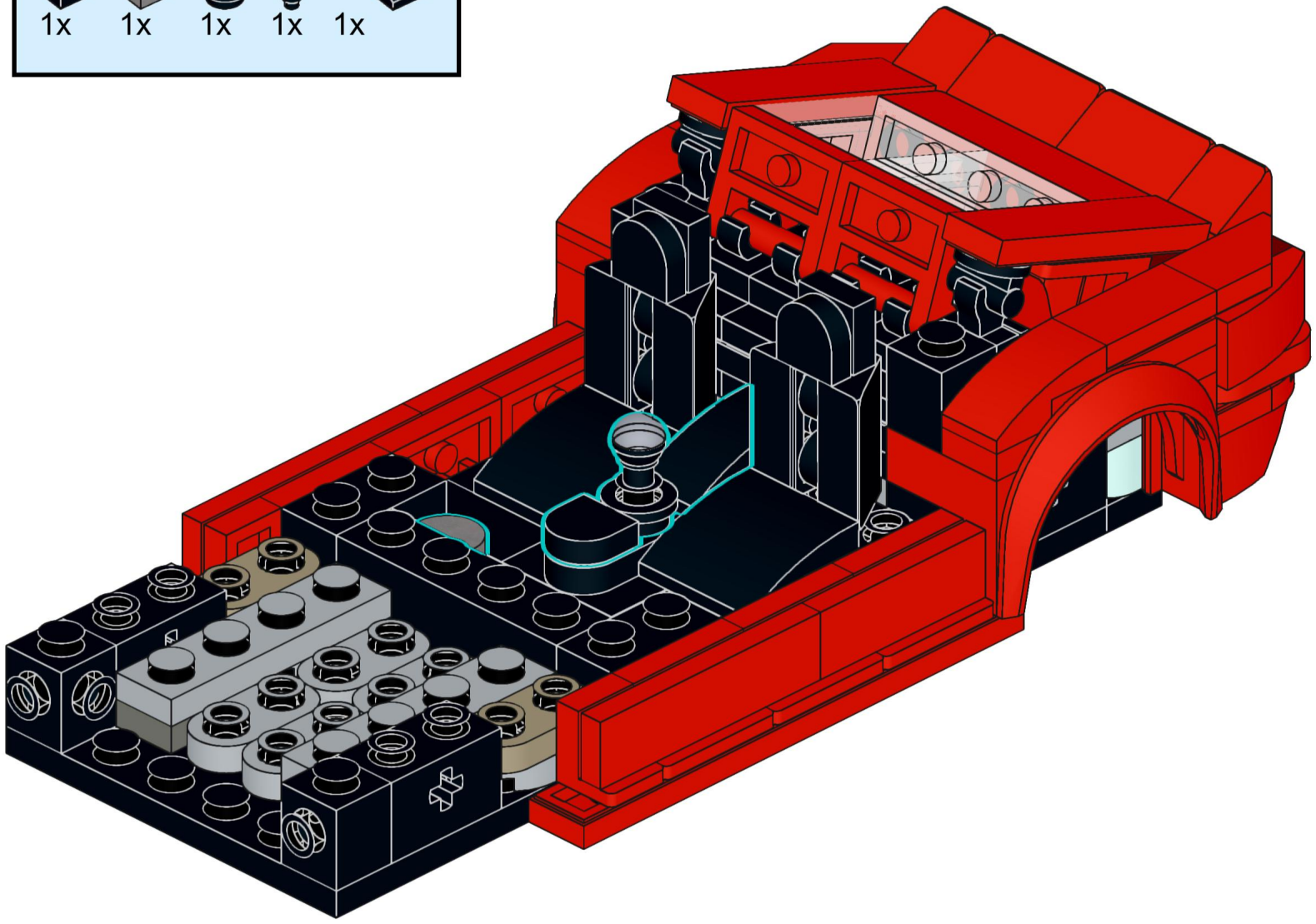

40

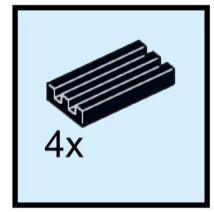

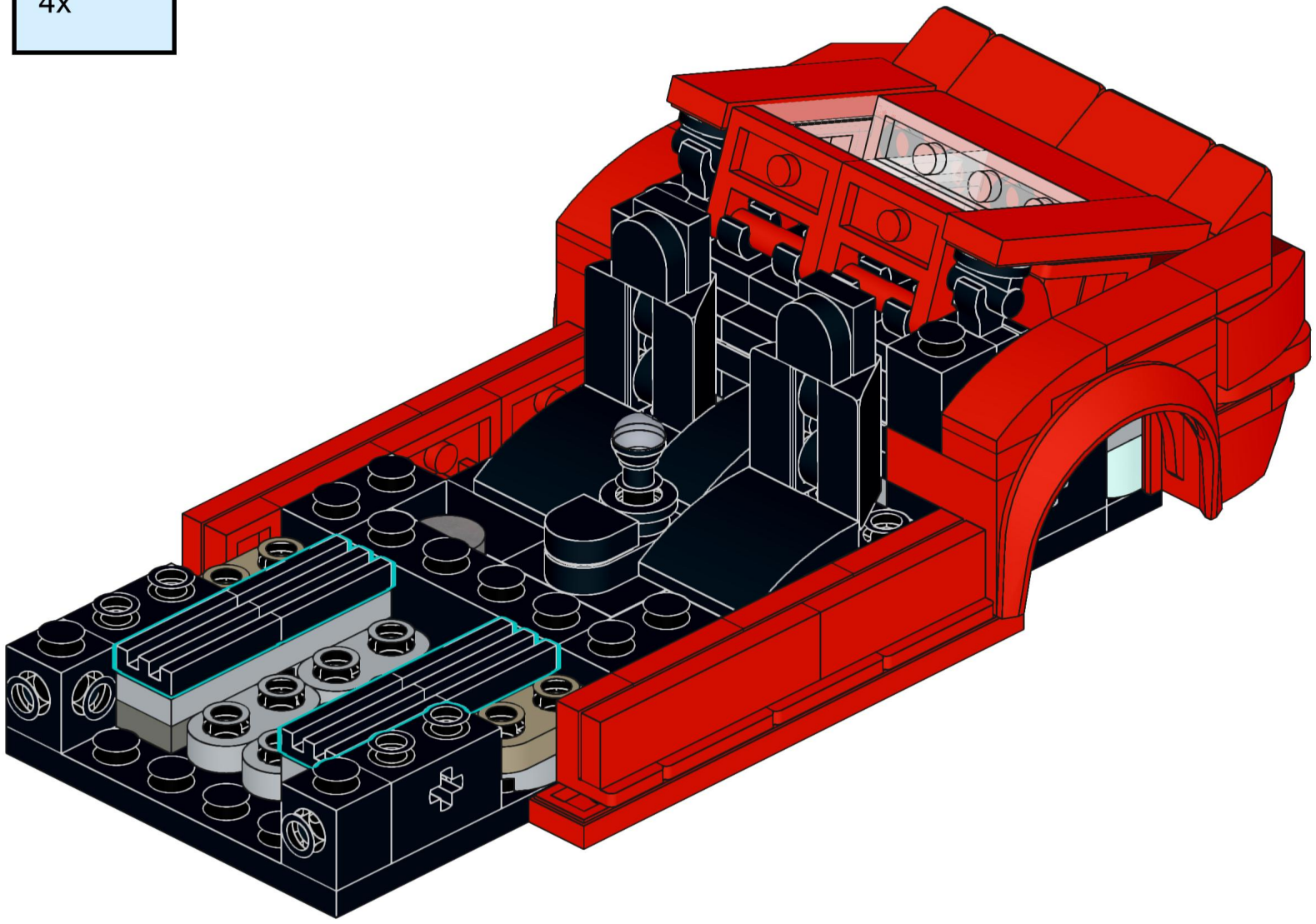

41

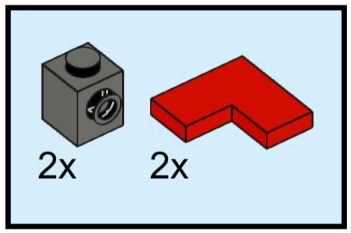

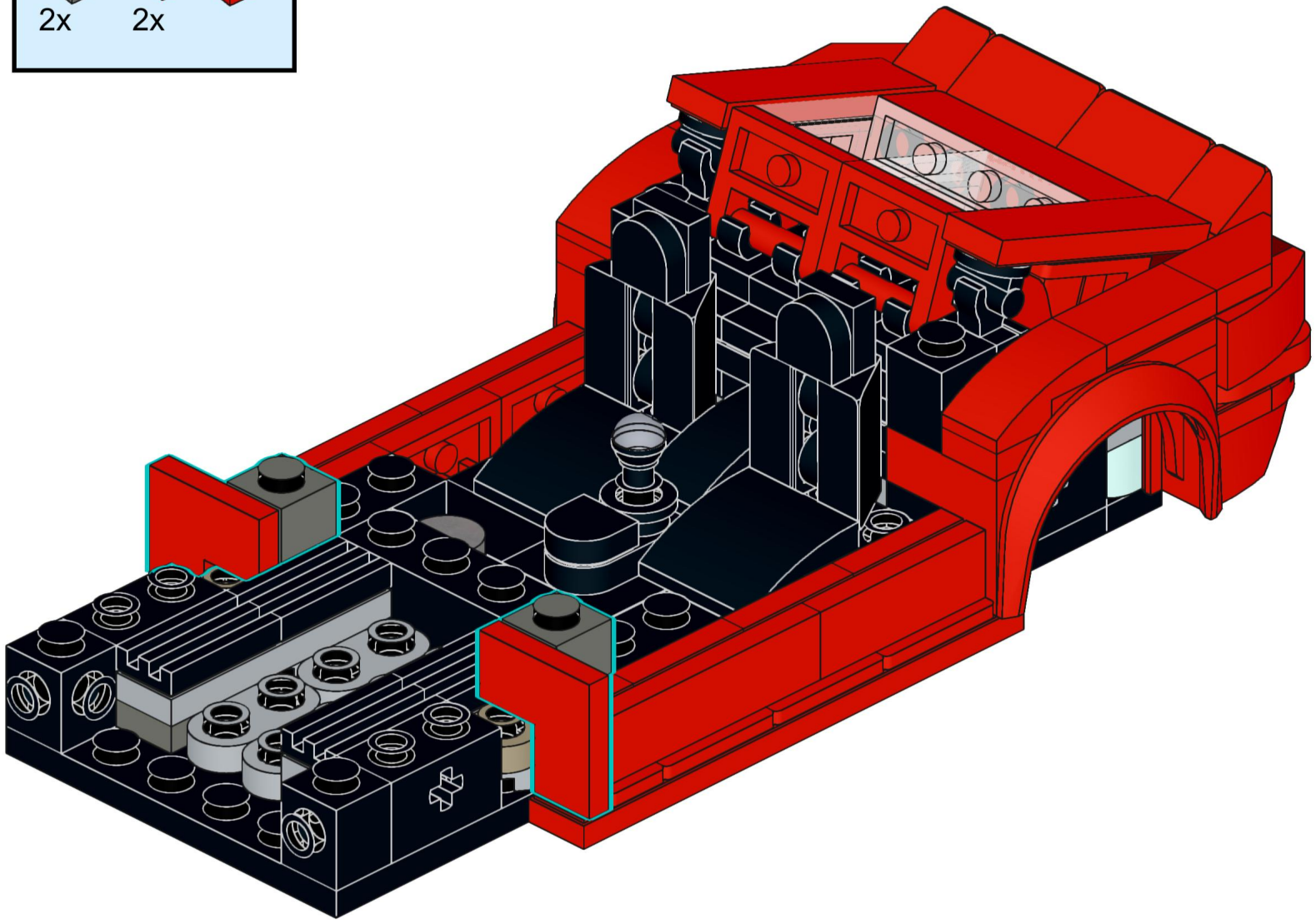

42

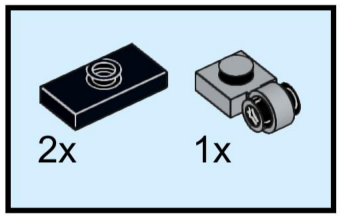

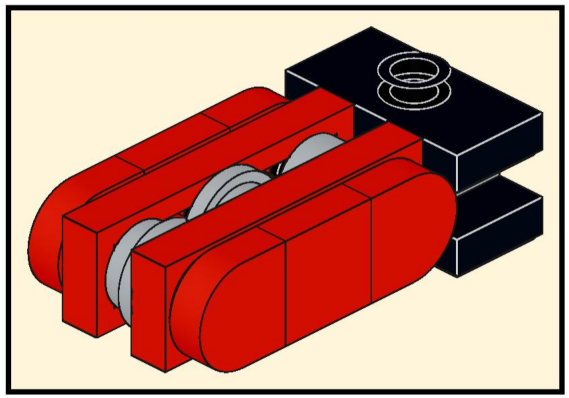



43

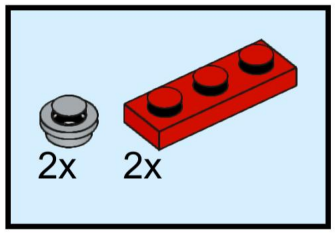

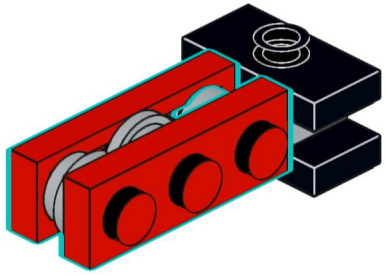

44

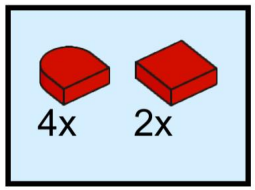

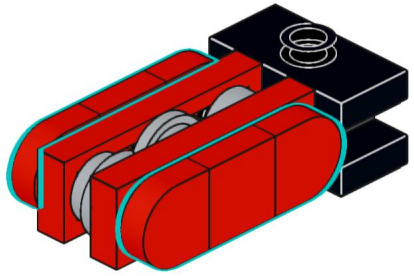

45

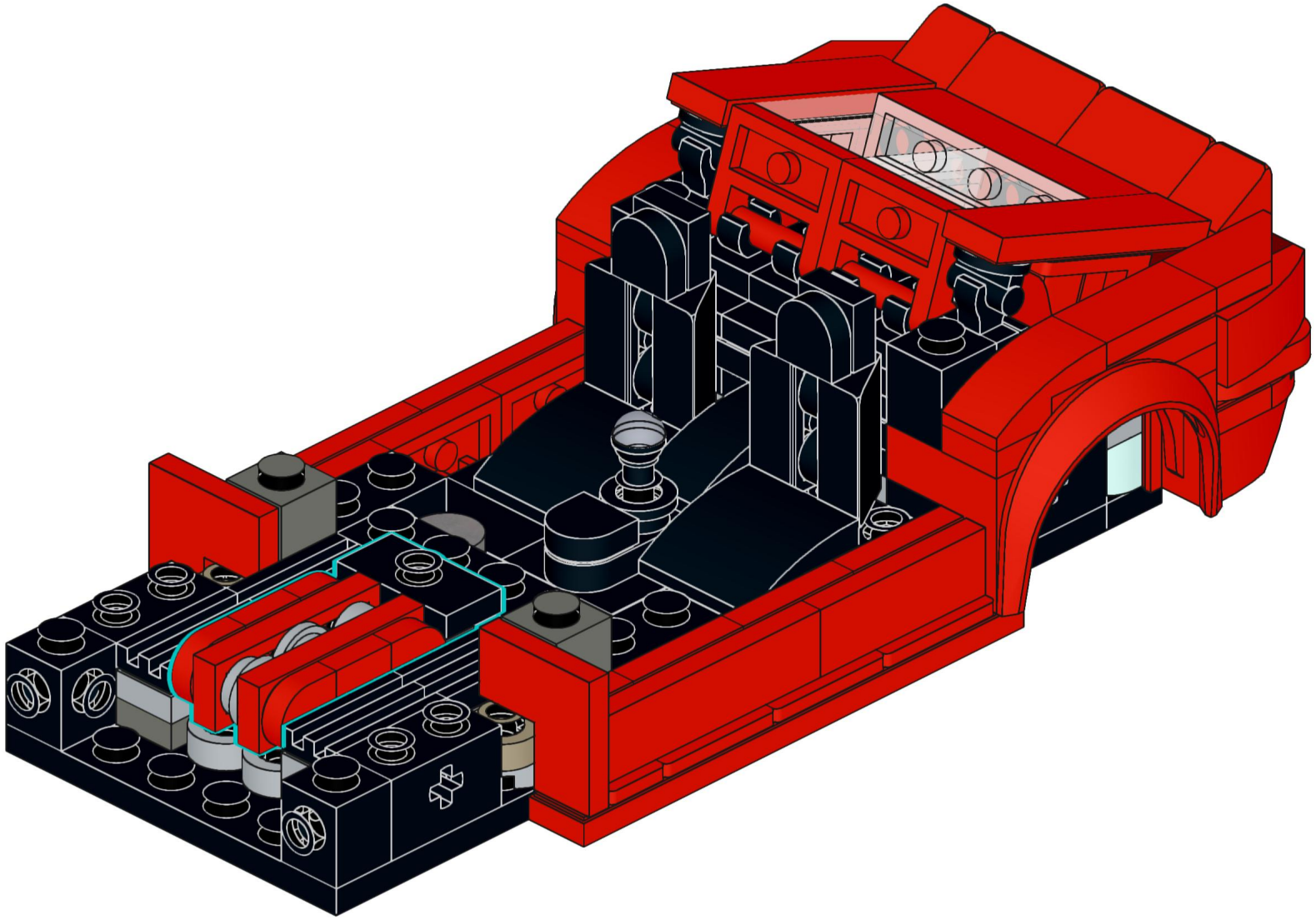

46

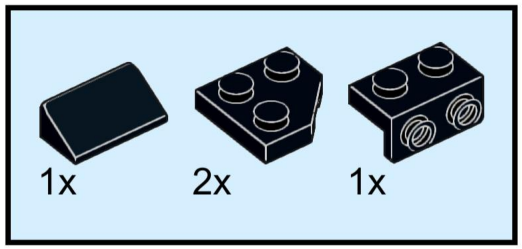

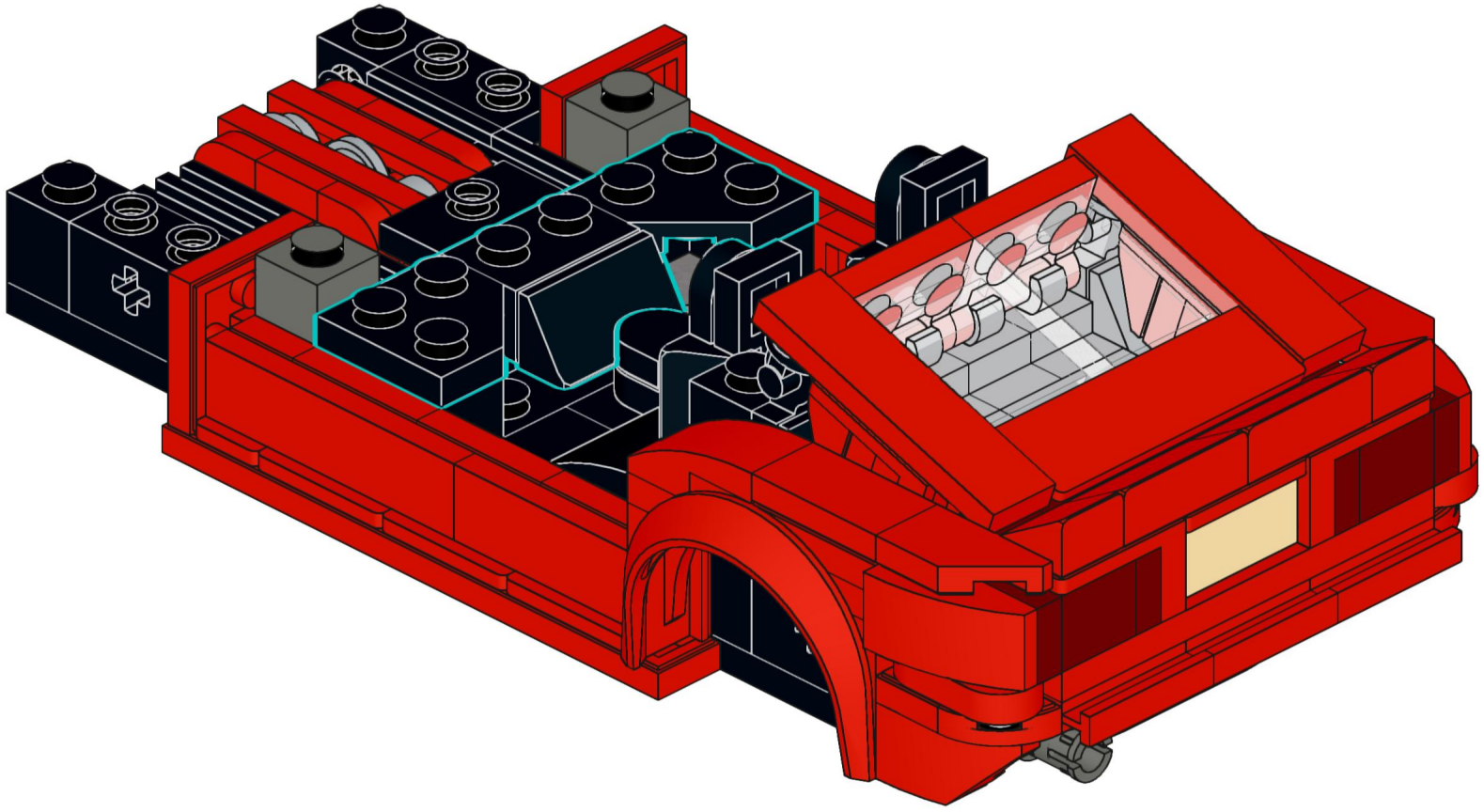

47

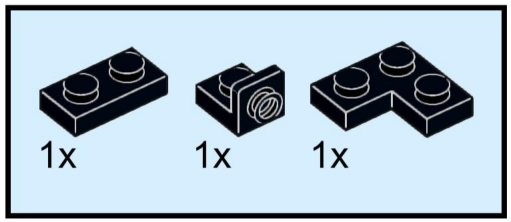

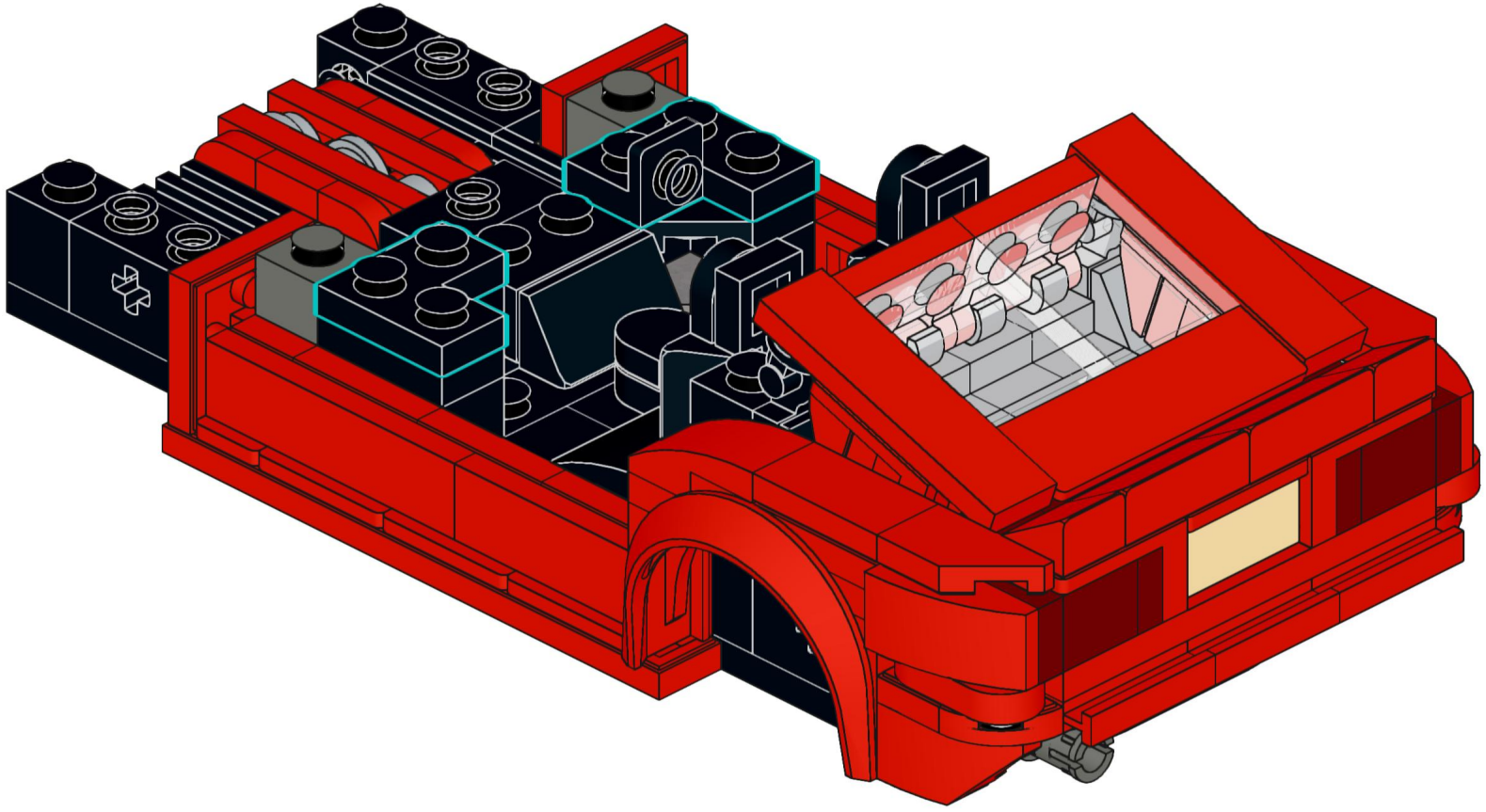

48

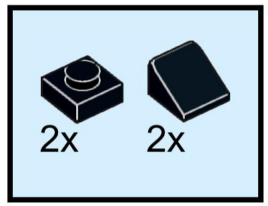

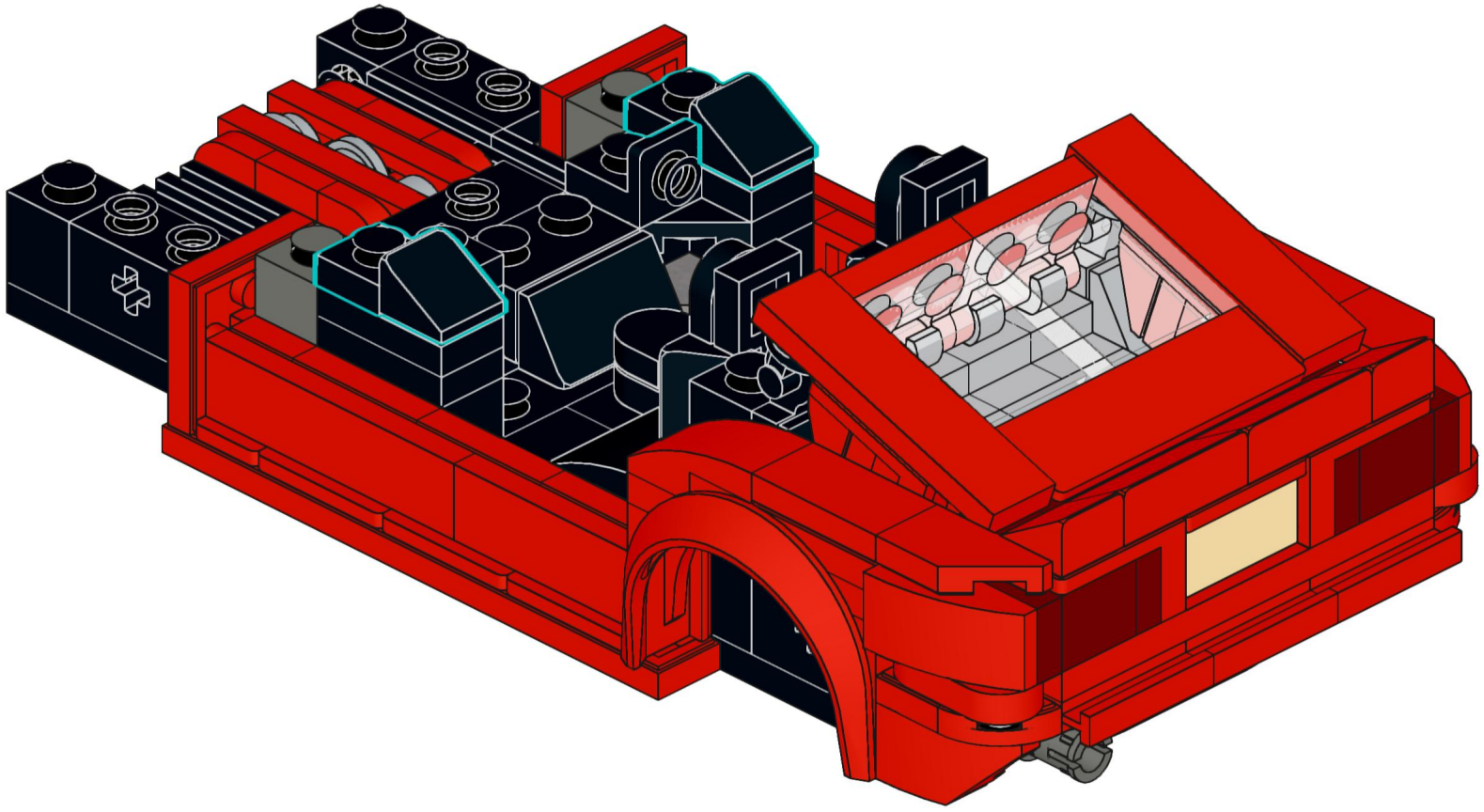

49

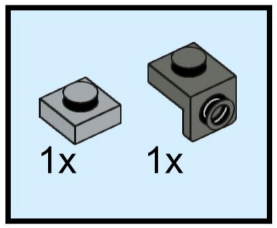

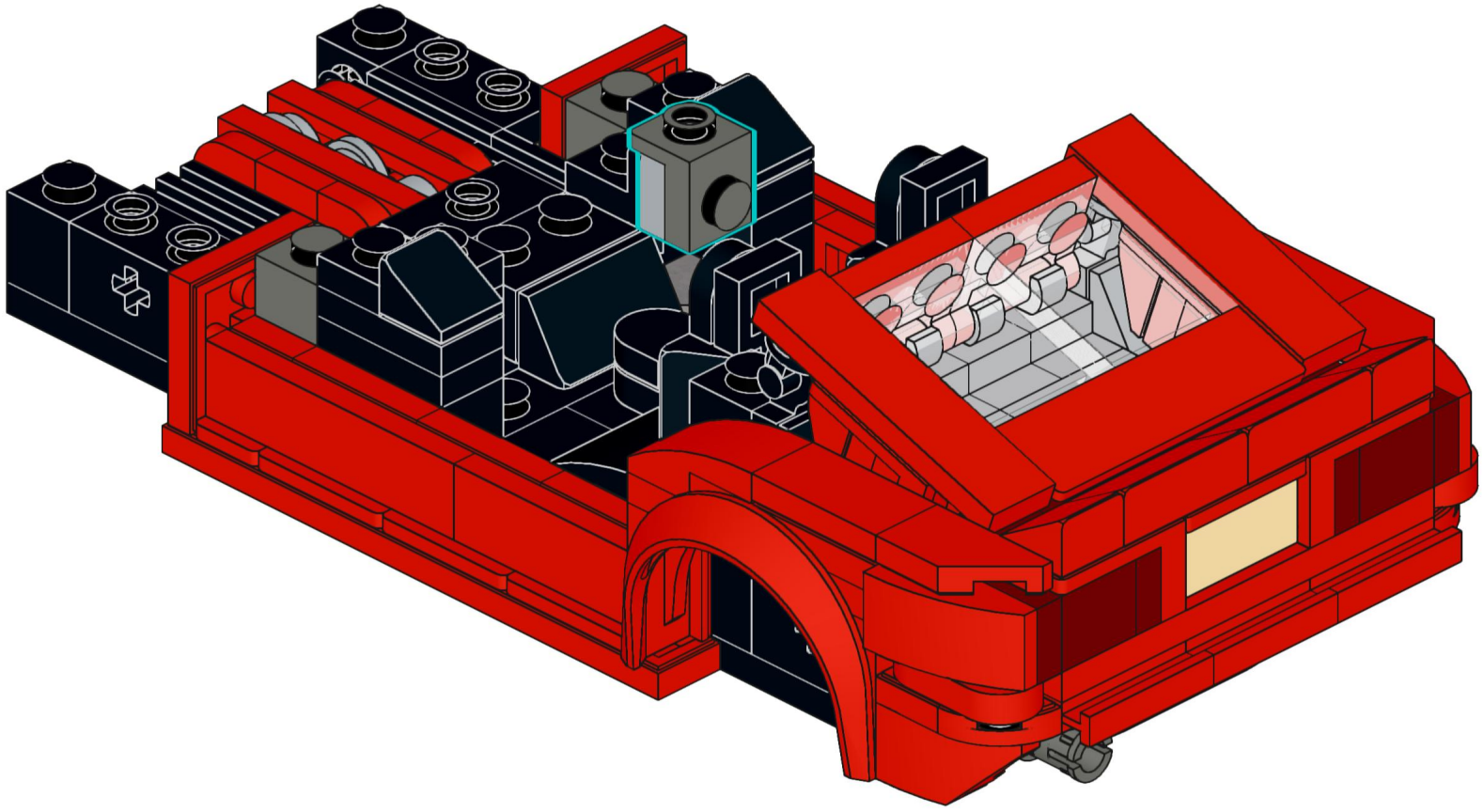

50

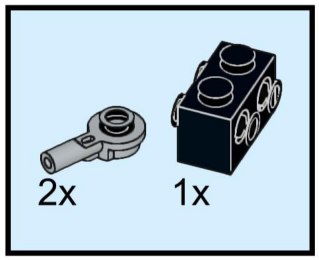

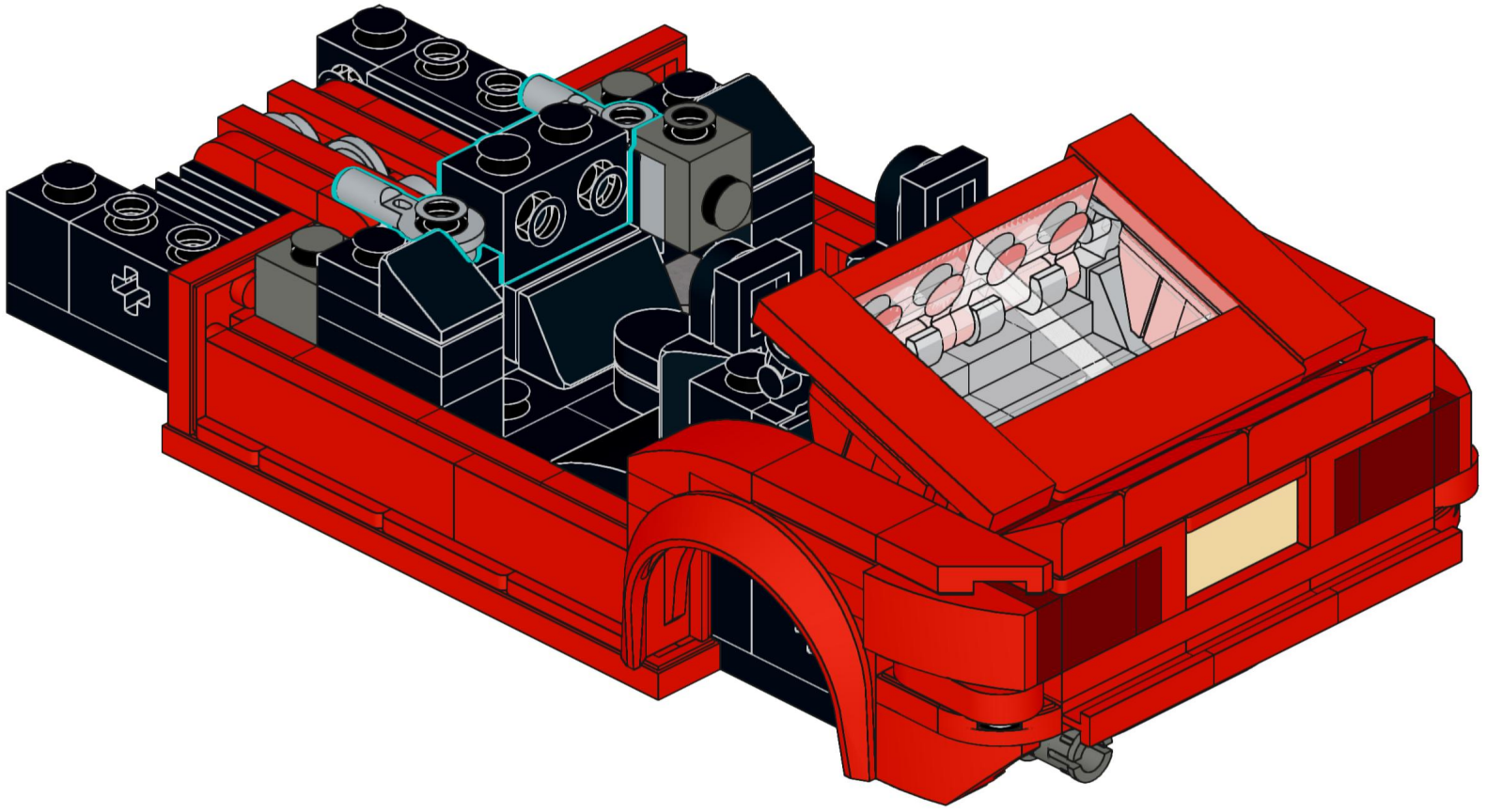

51

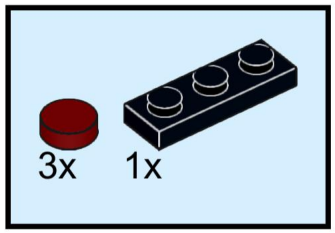

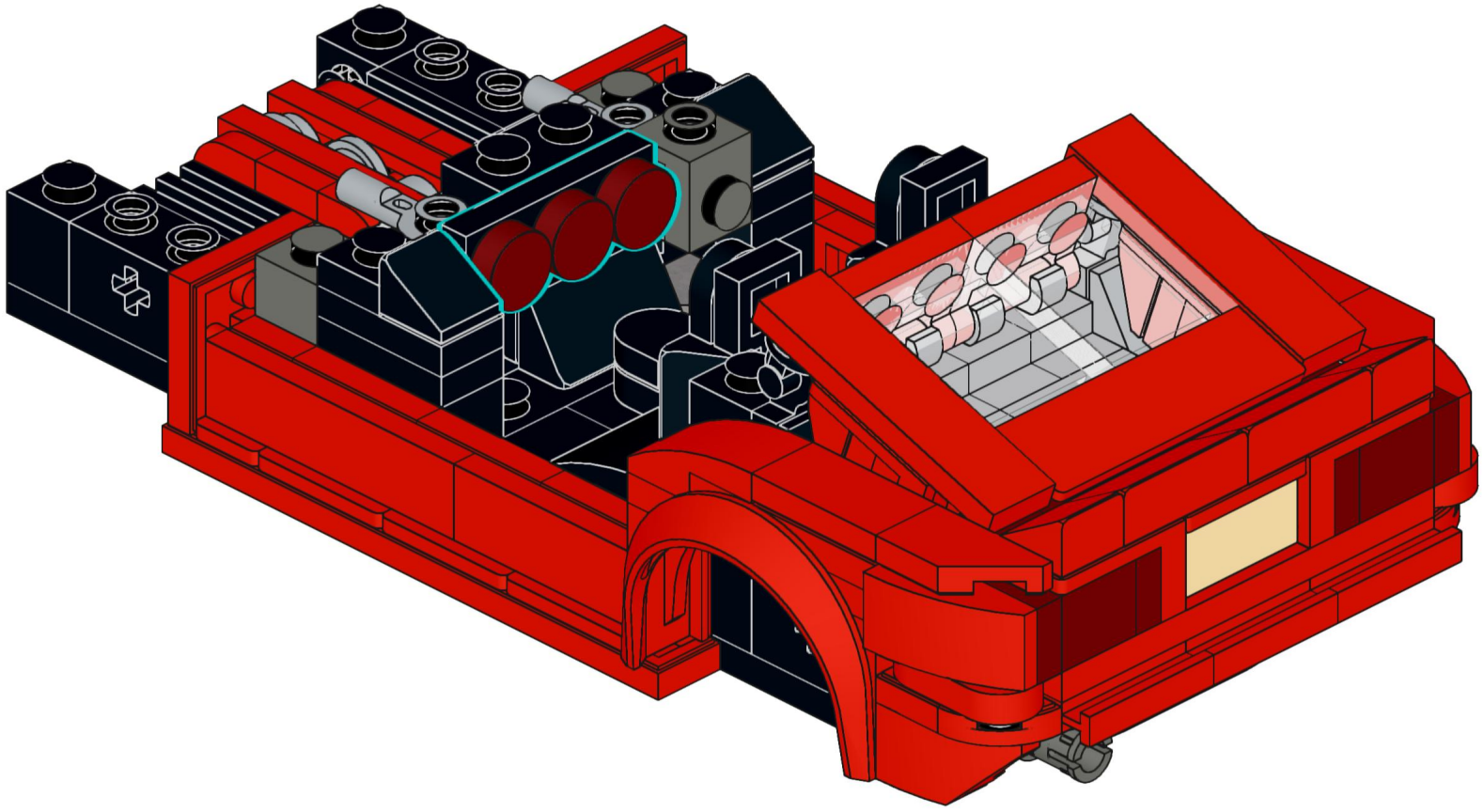

52

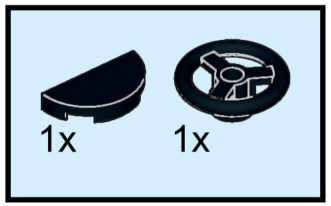

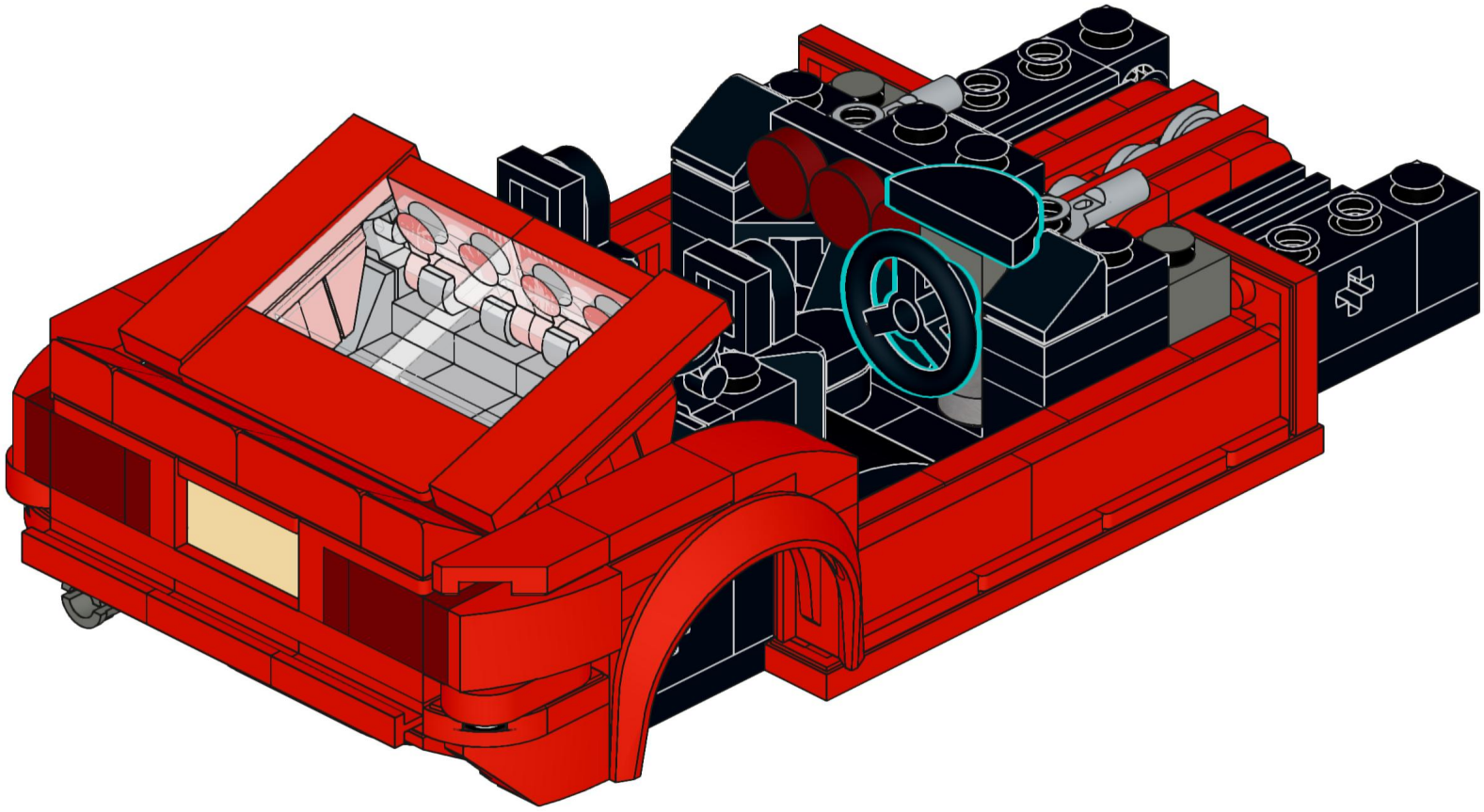

53

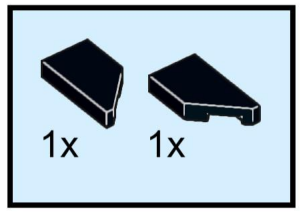

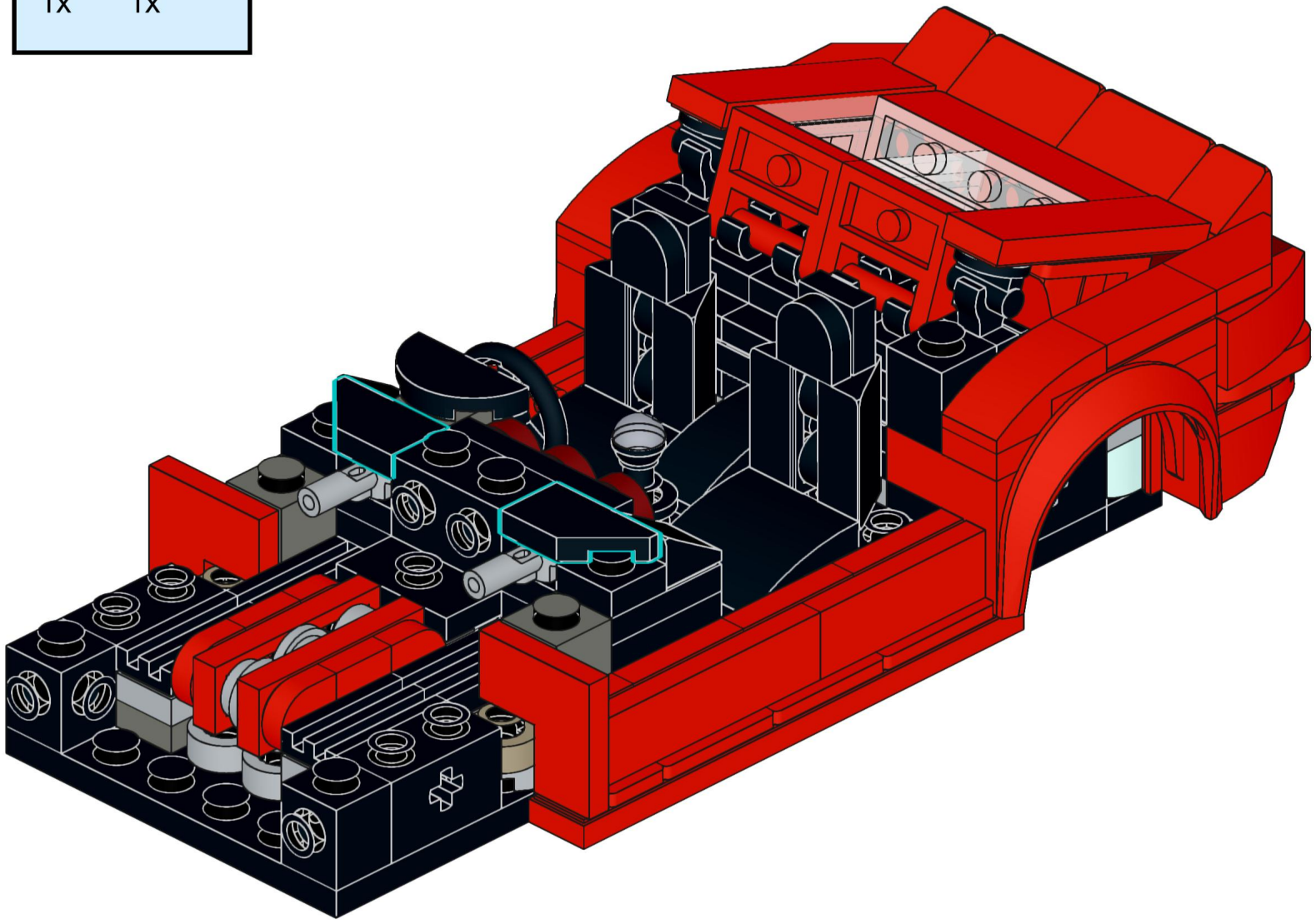

54

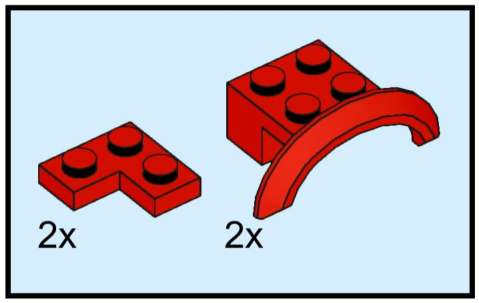

55

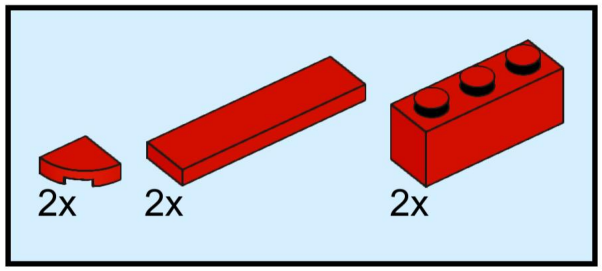

56

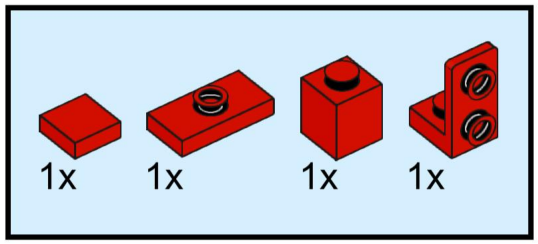

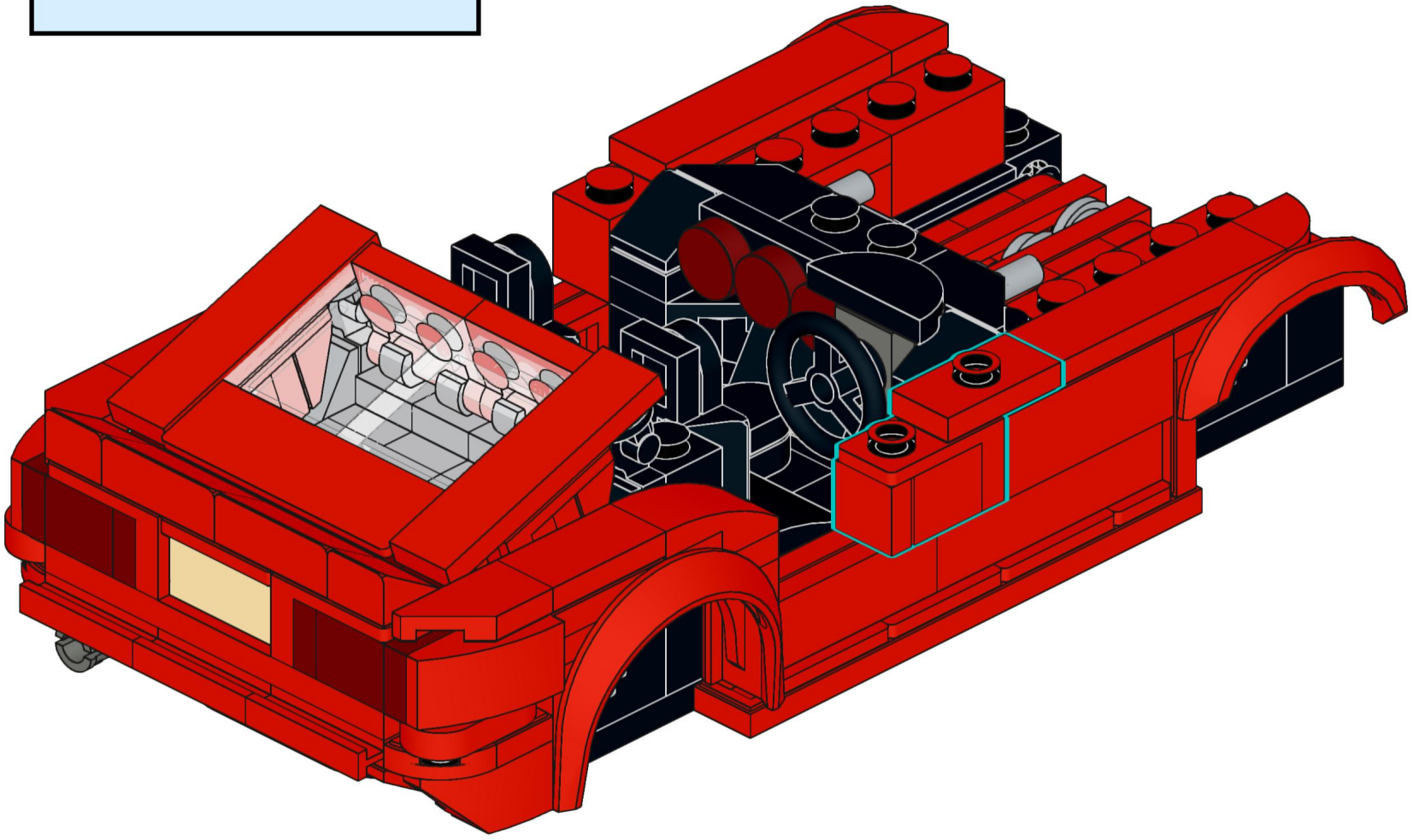

57

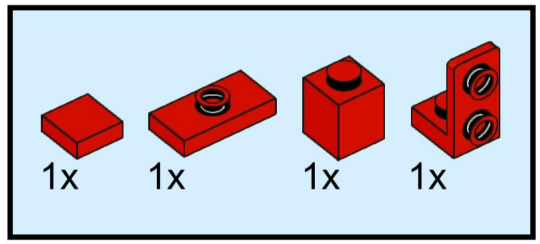

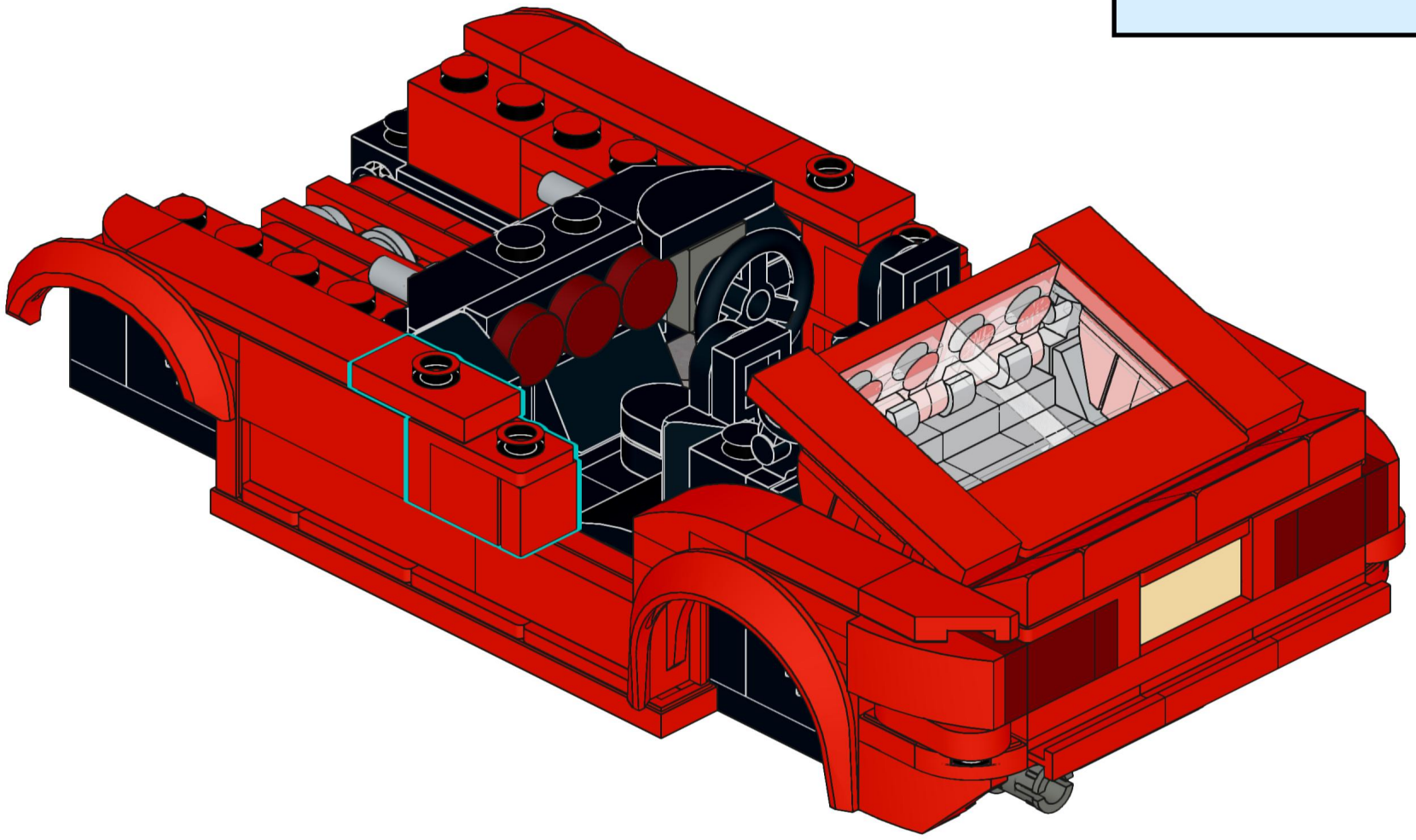

58

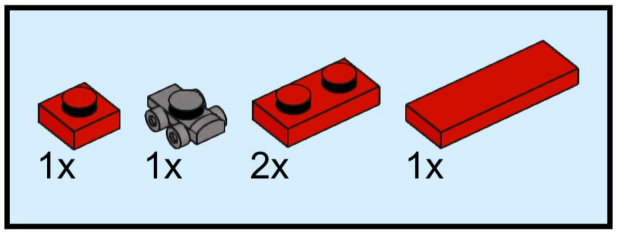

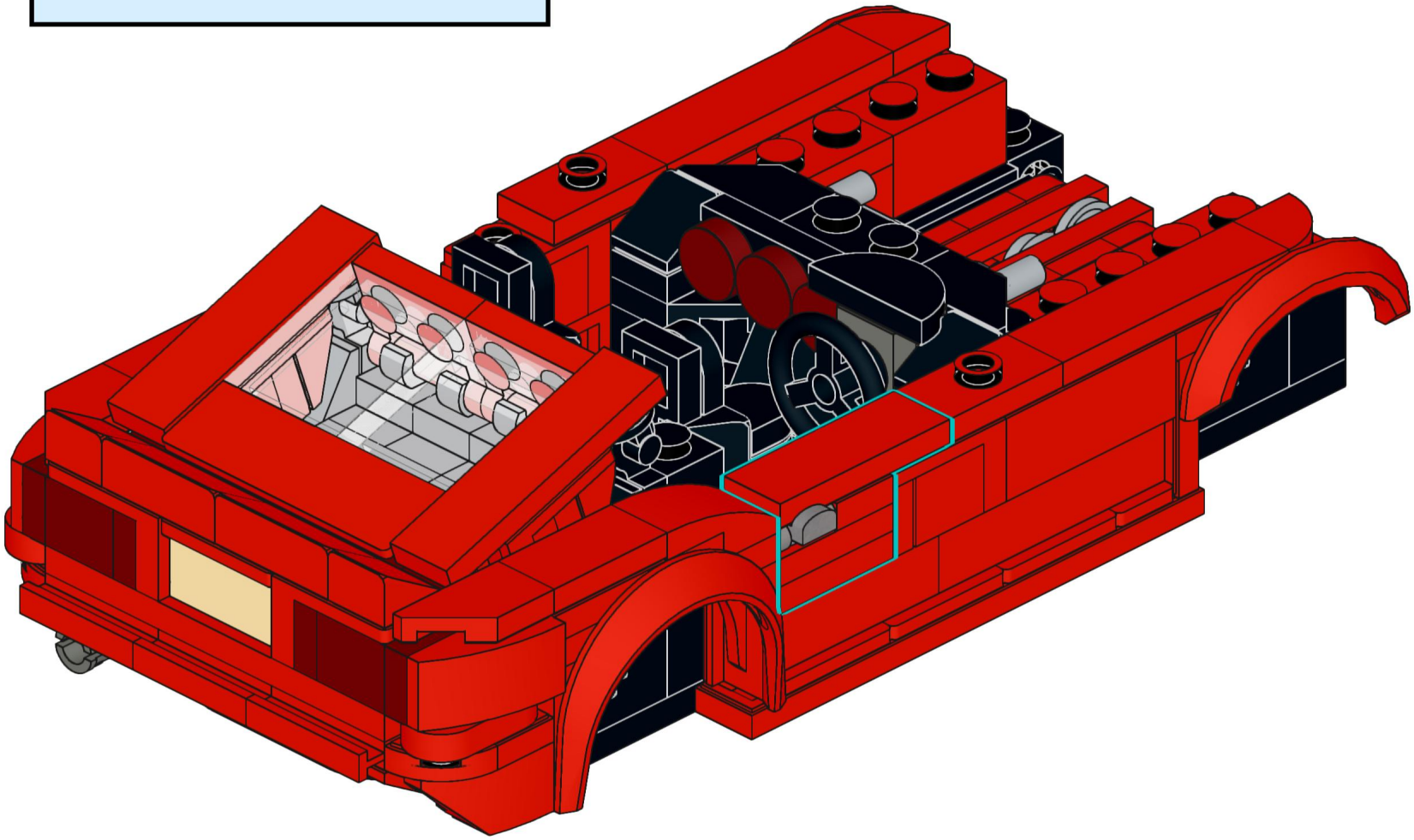

59

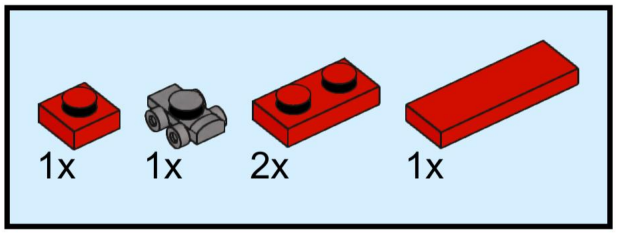

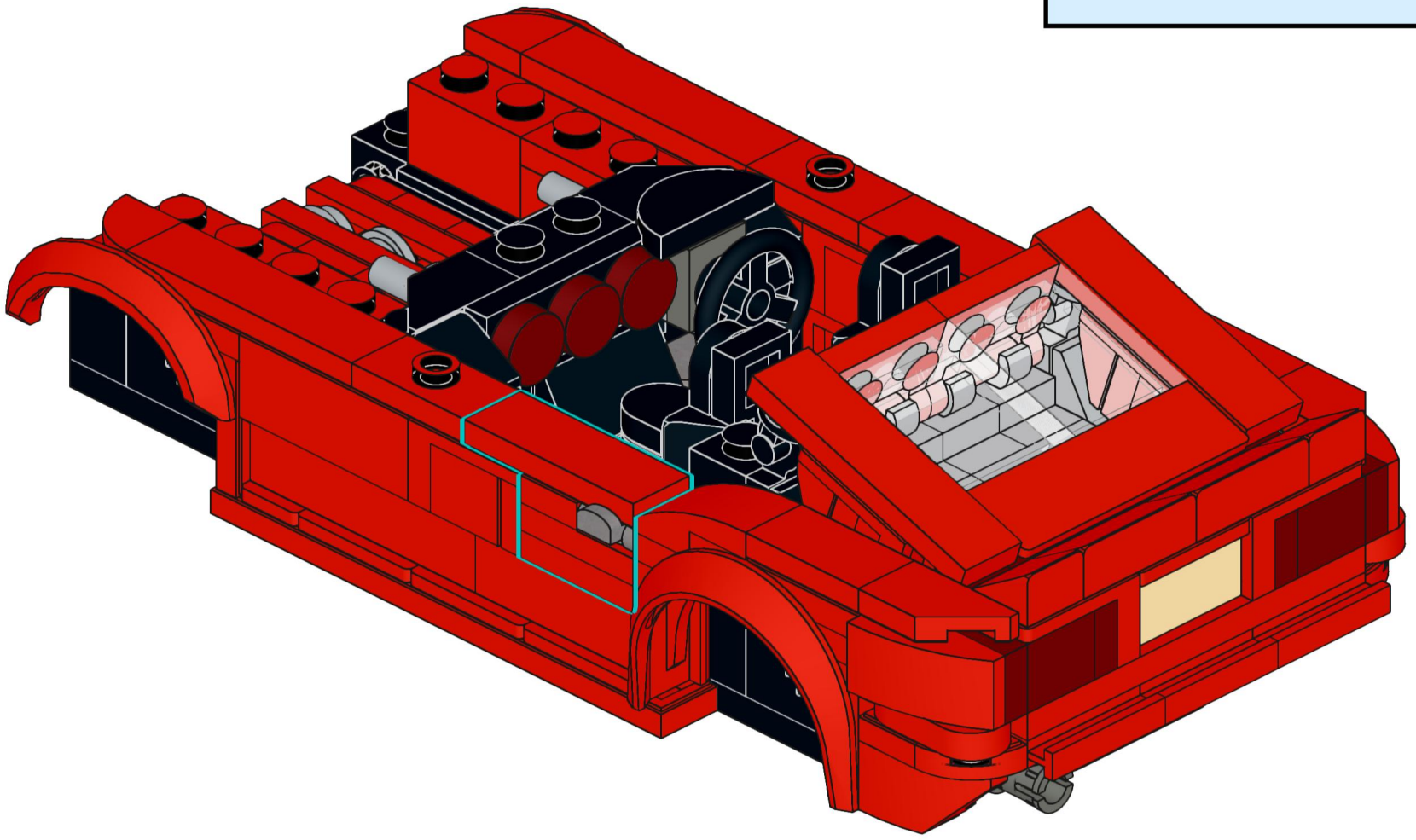

60

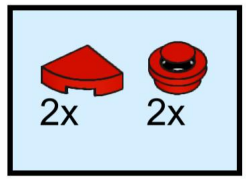

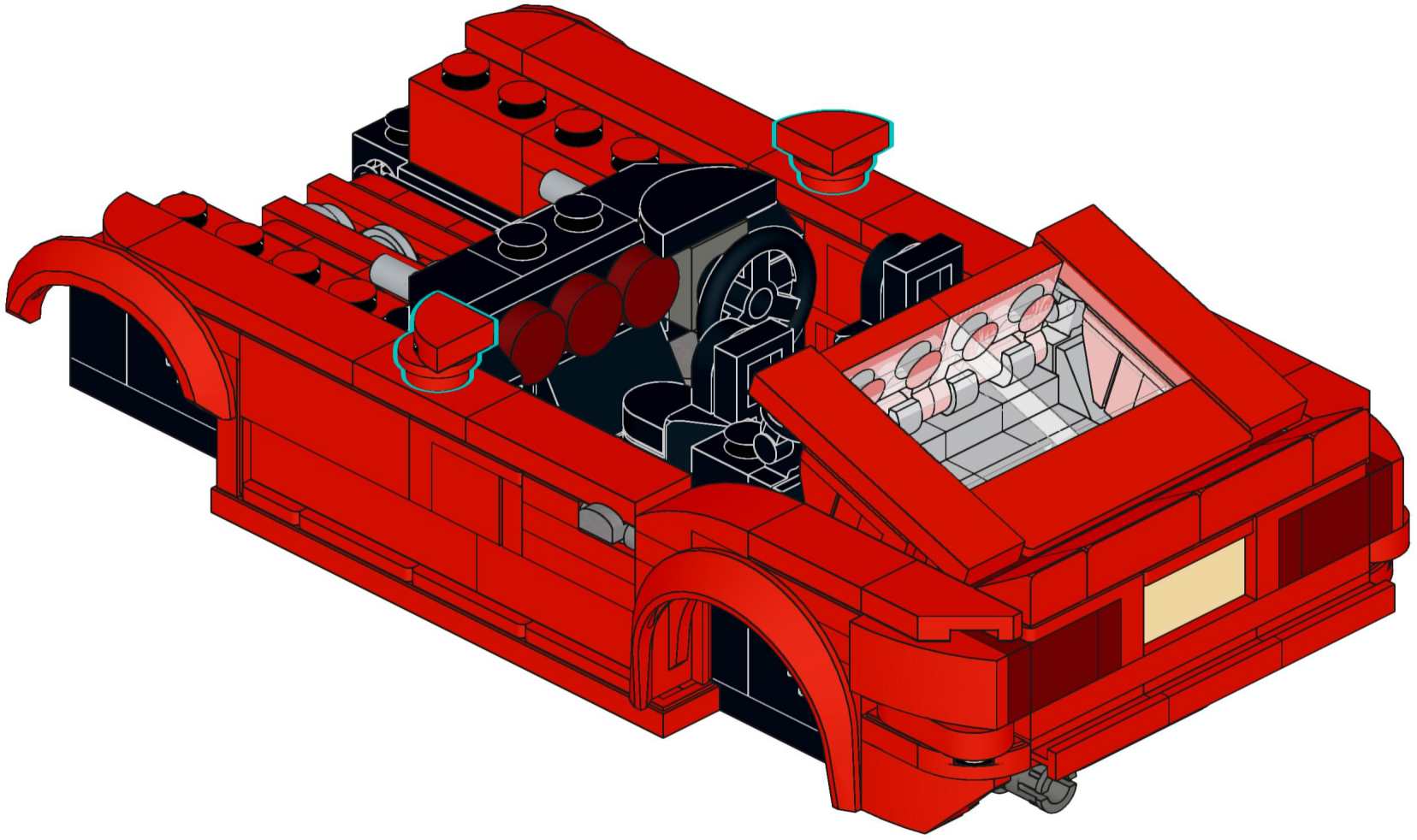

61

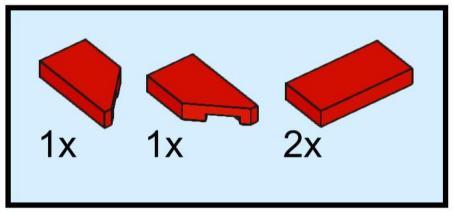

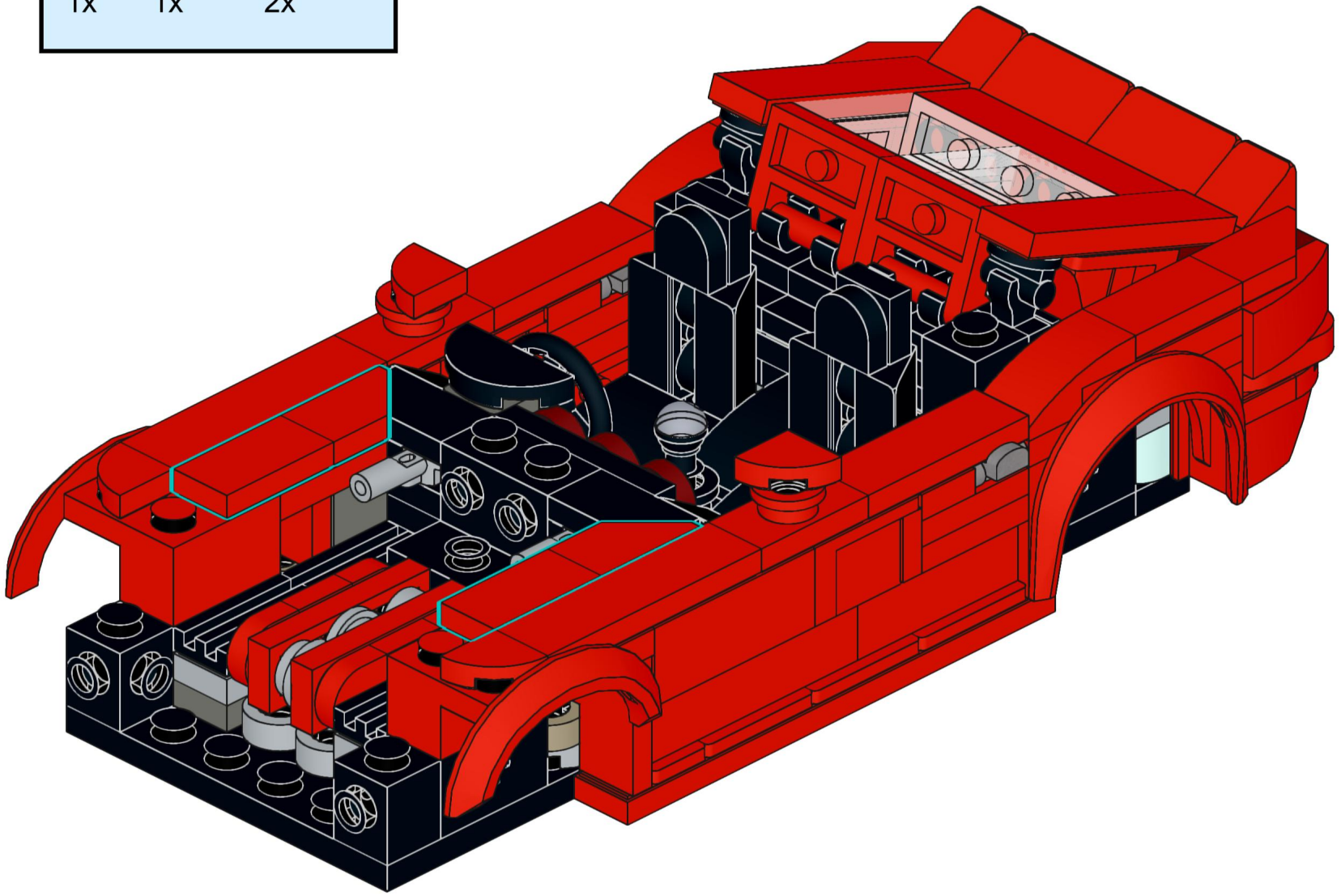

62

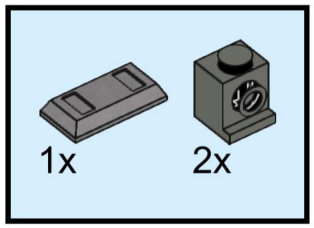

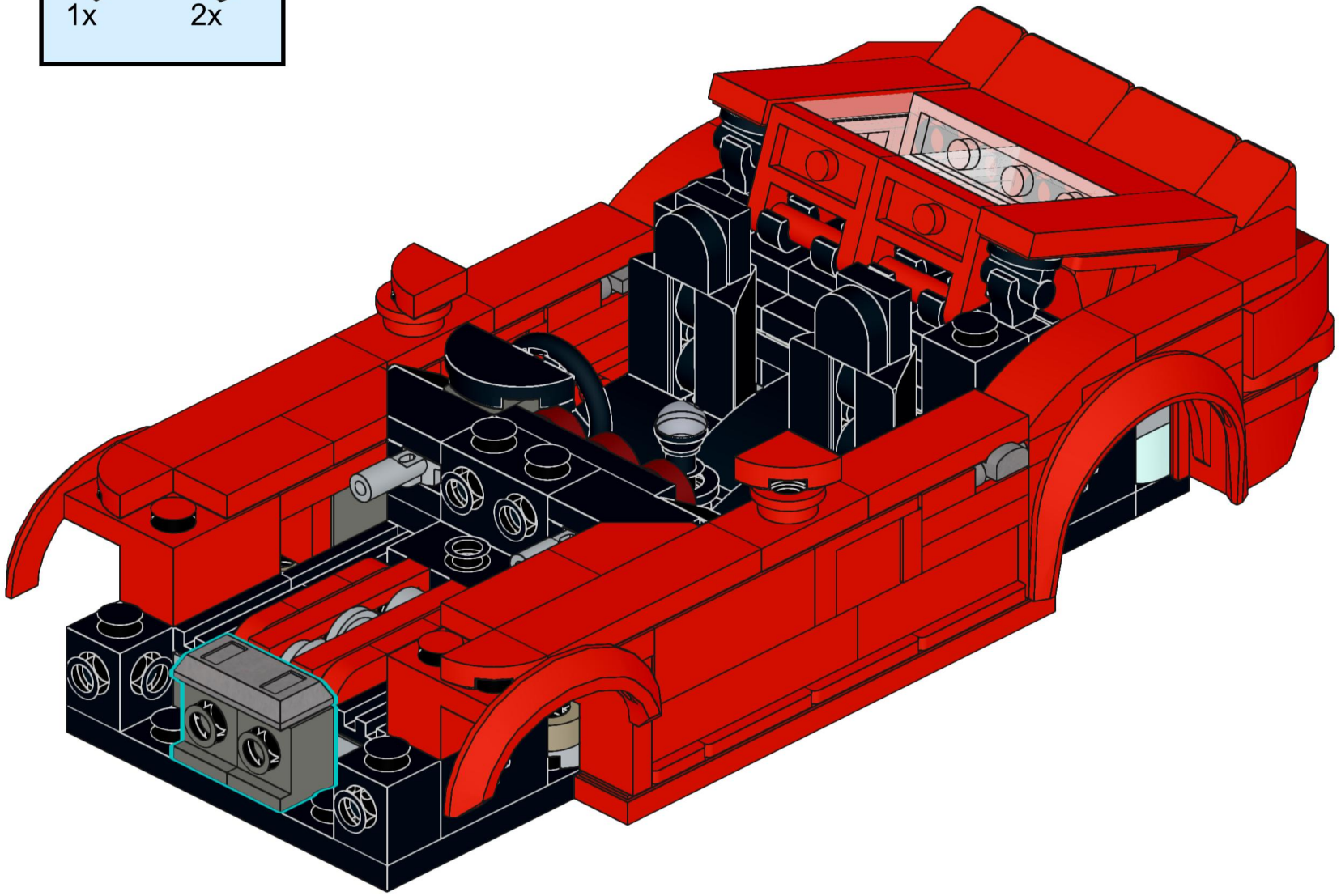

63

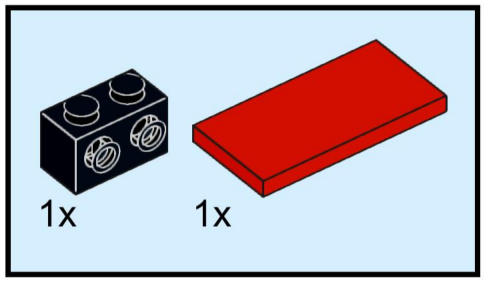

64

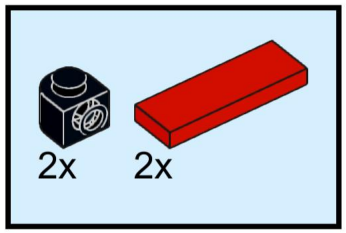

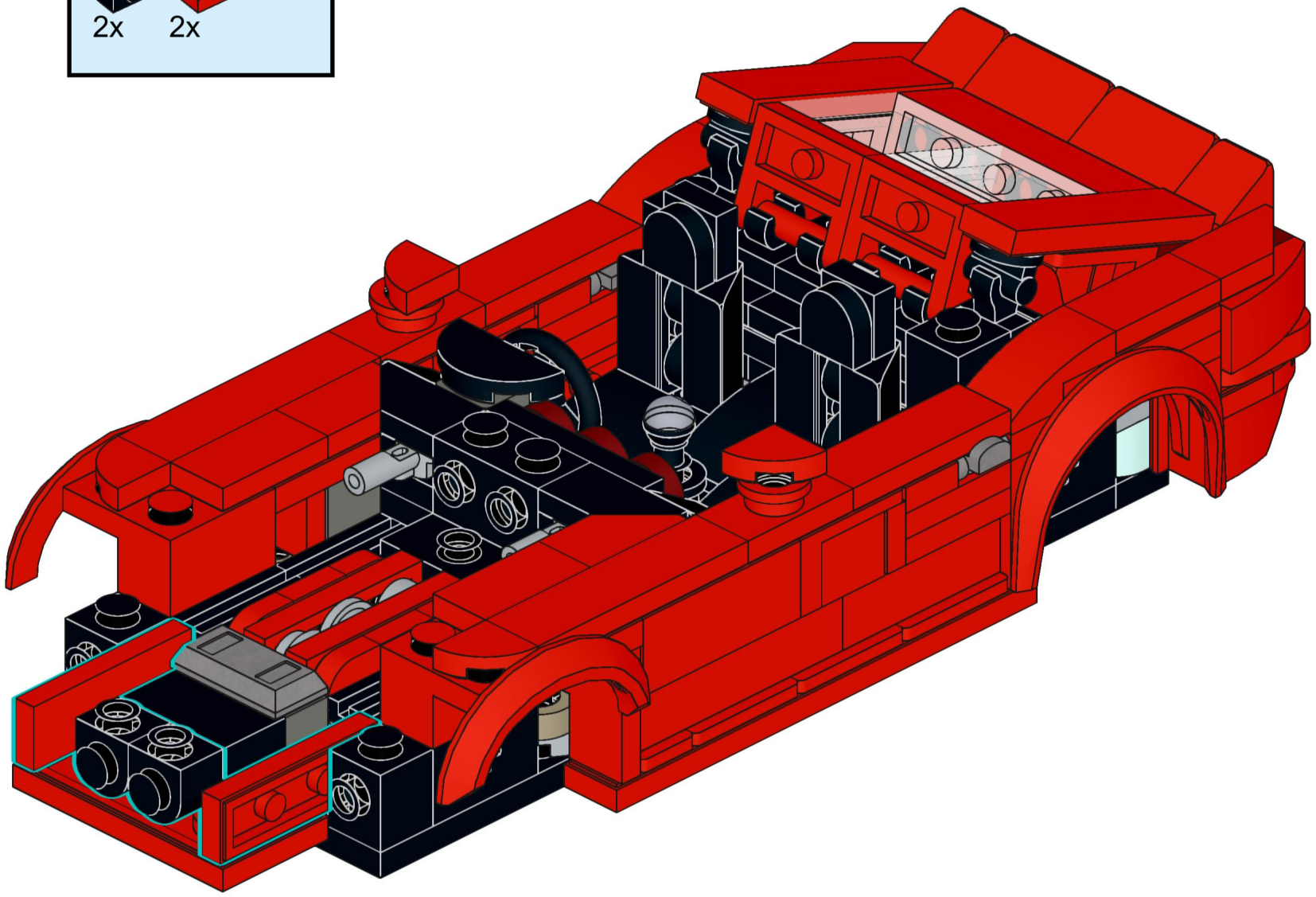

65

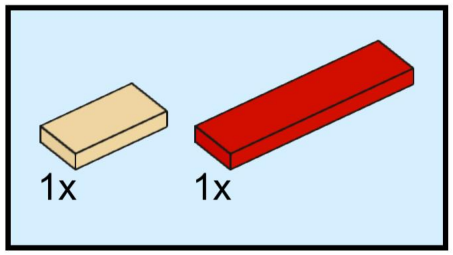

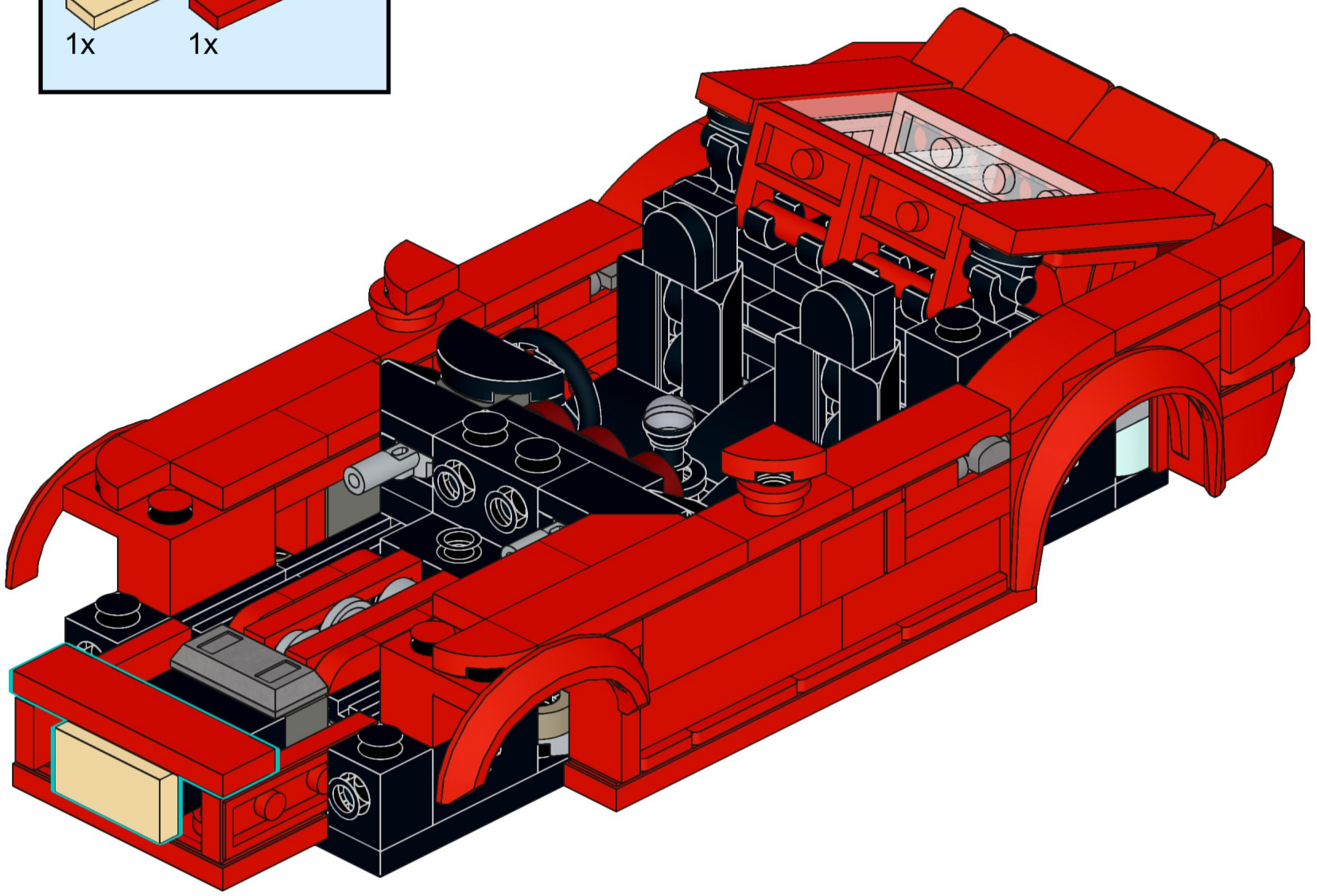

66

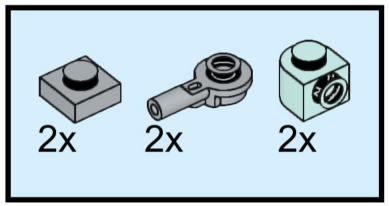

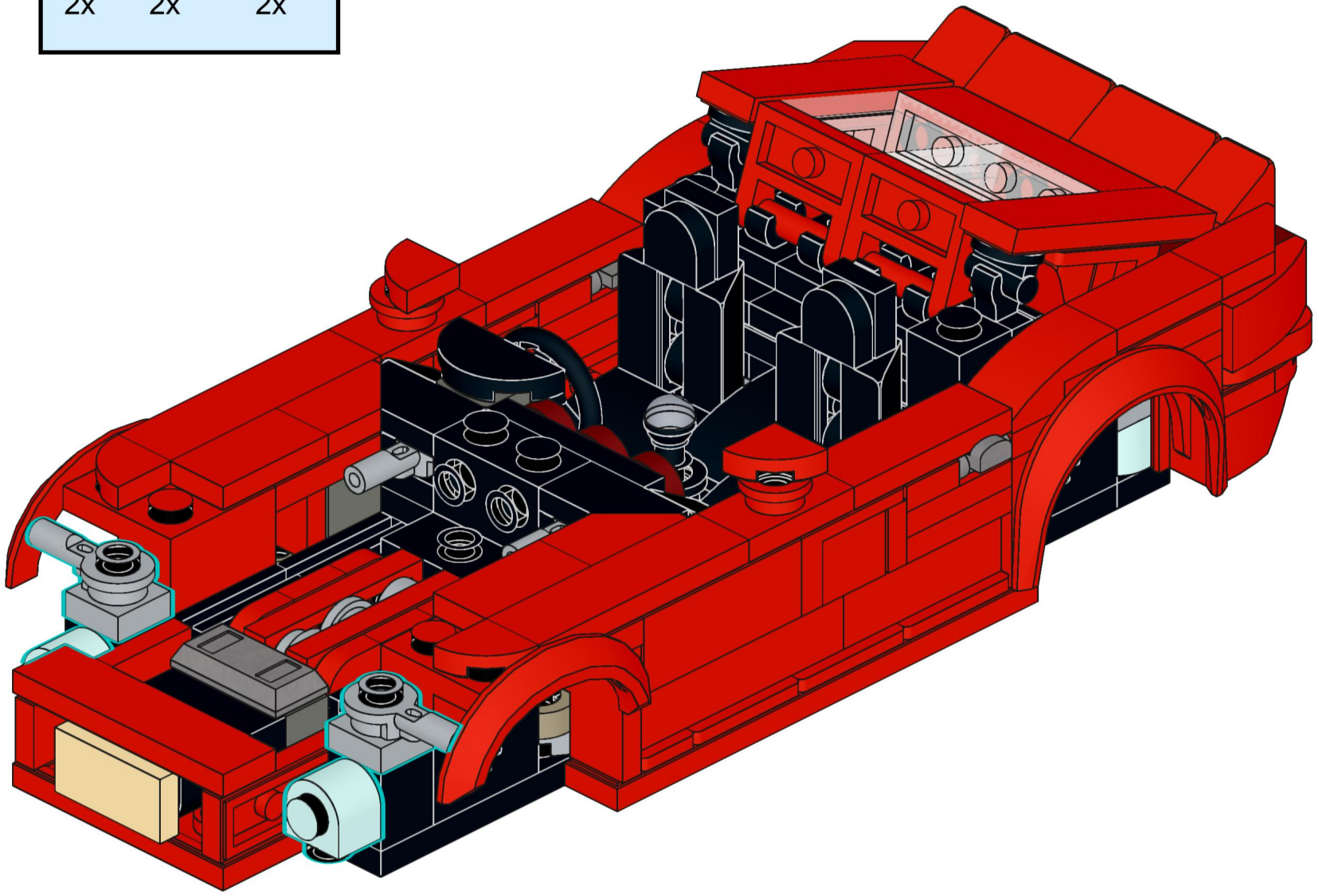

67

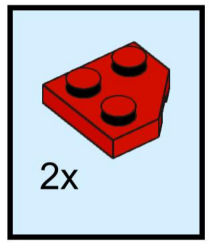

68

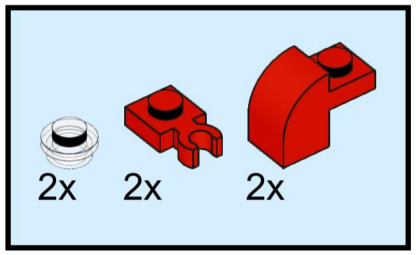

69

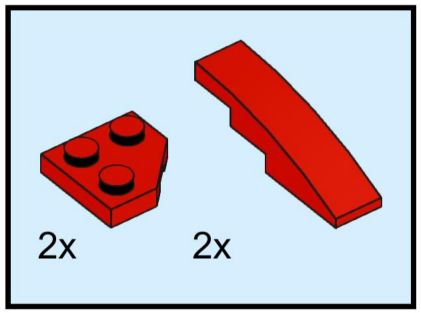

70

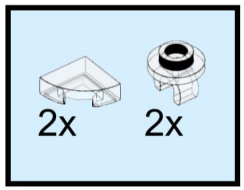

71

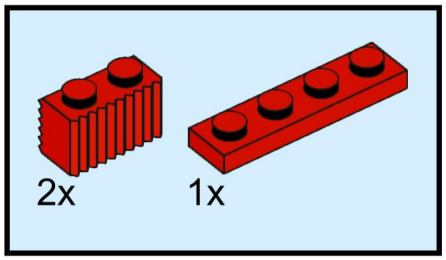

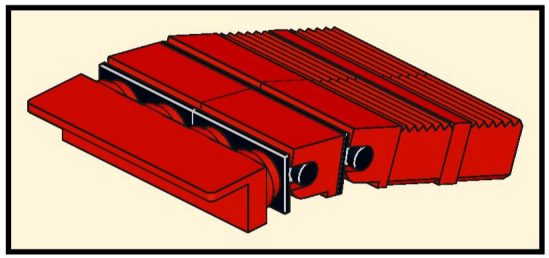

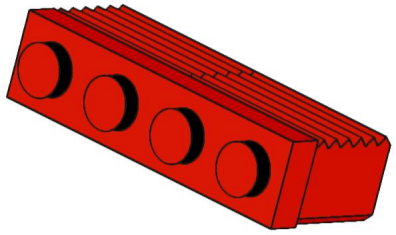

72

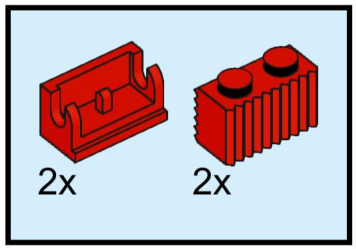

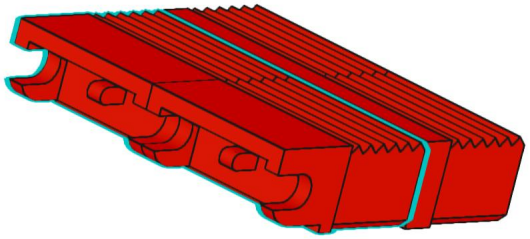

73

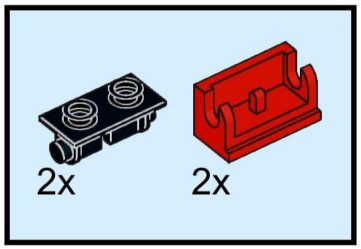

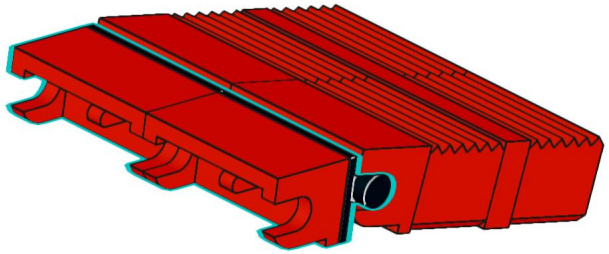

74

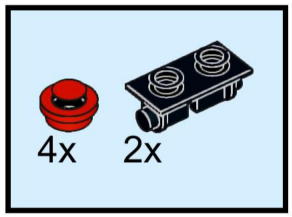

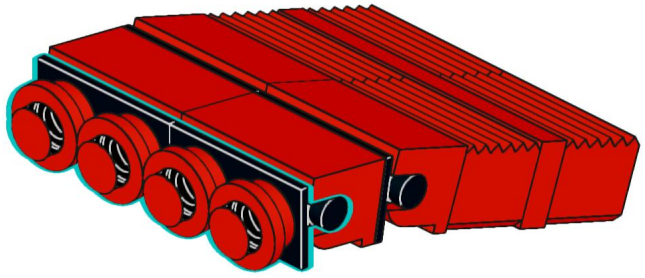

75

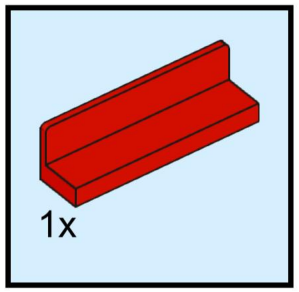

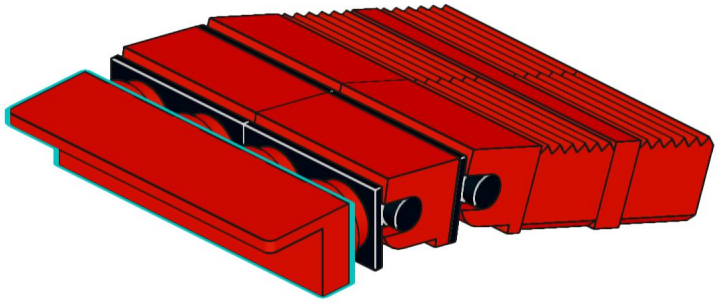

76

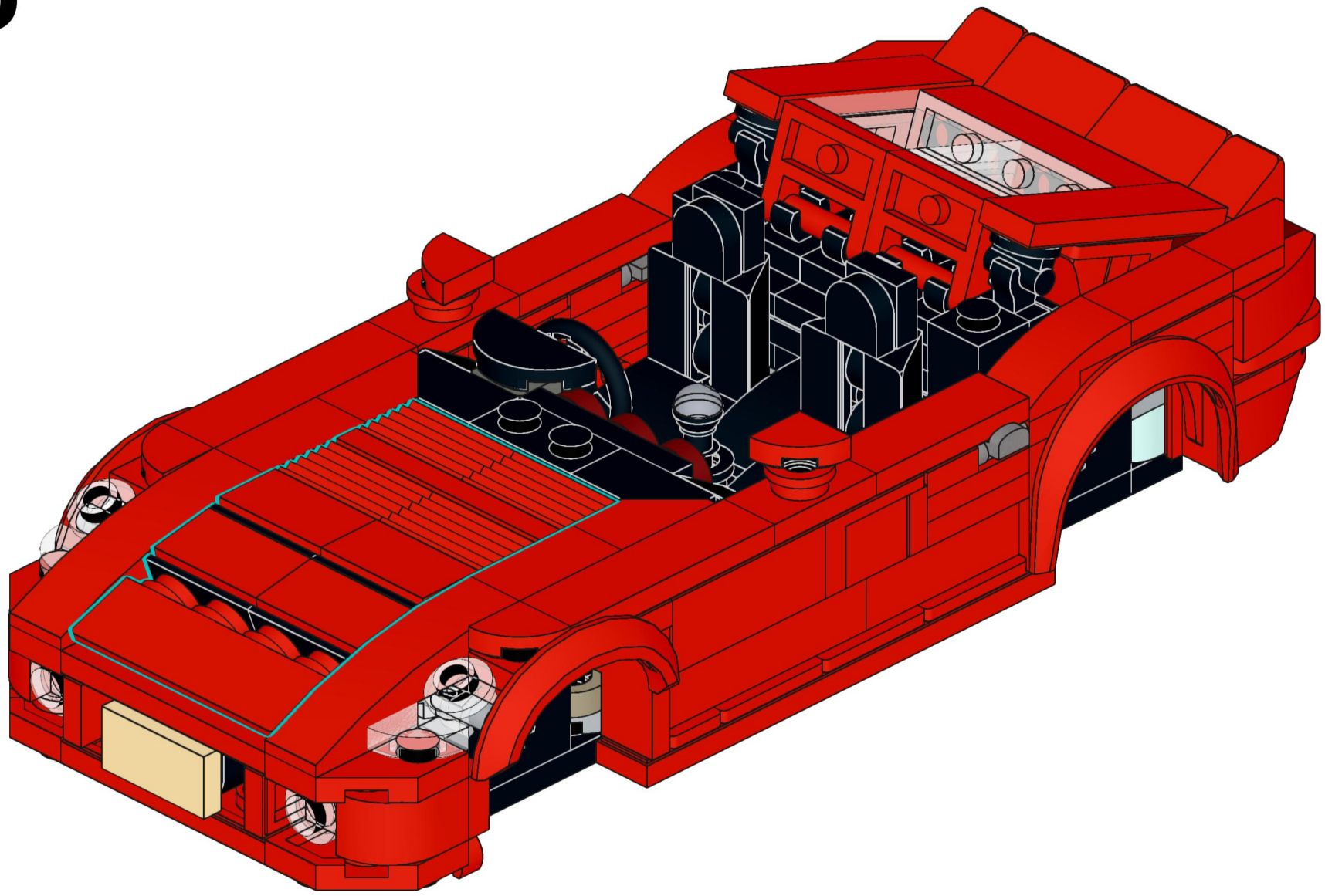

77

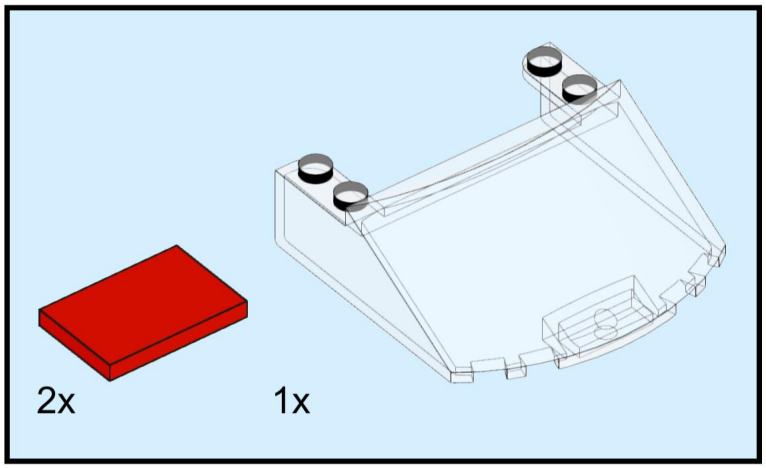

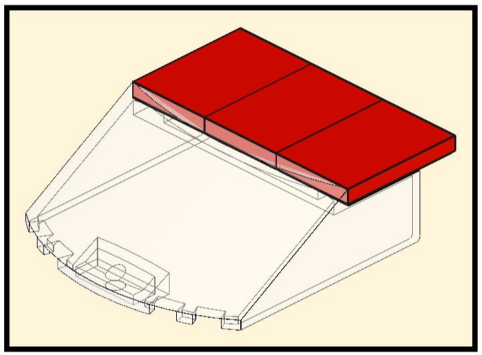

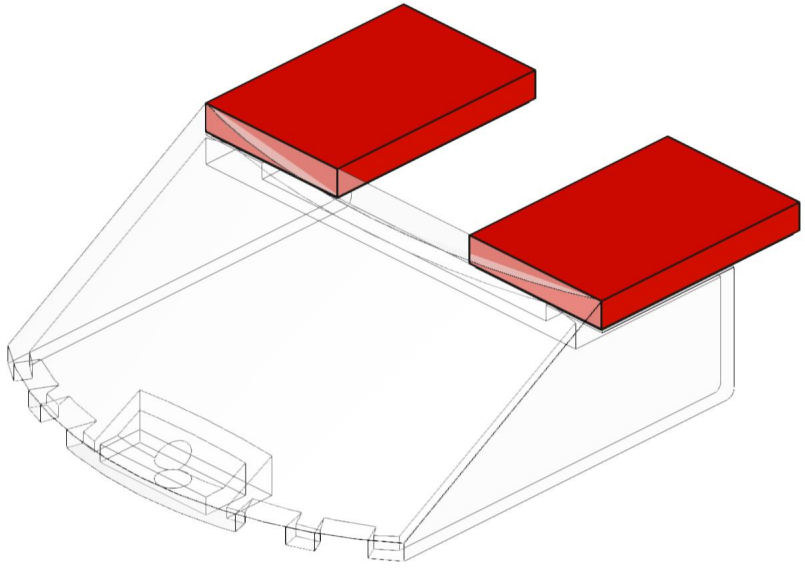

78

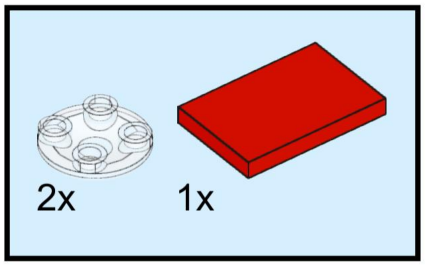

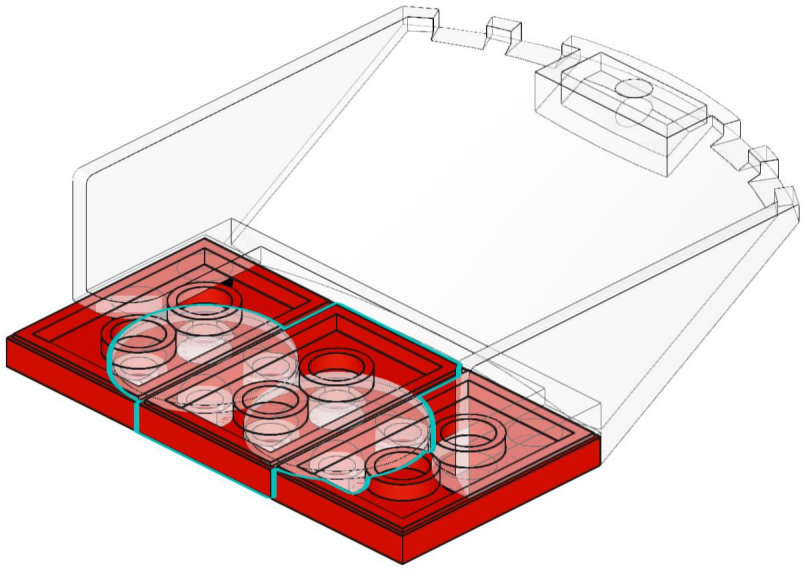

79

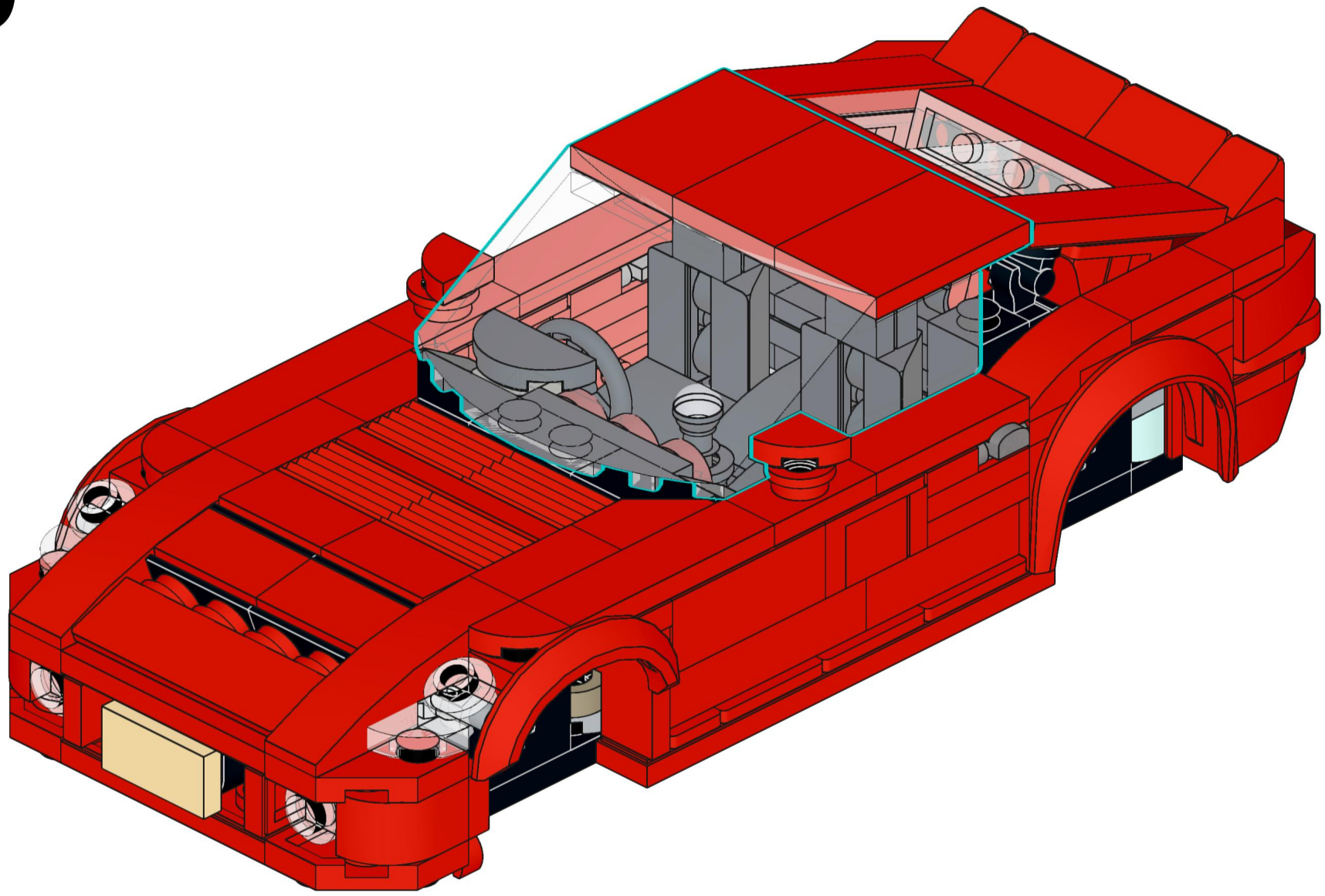

80

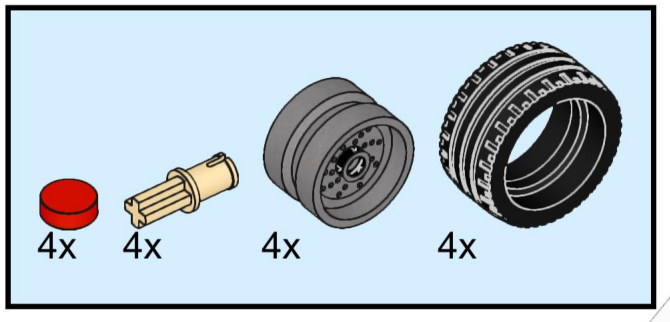

81

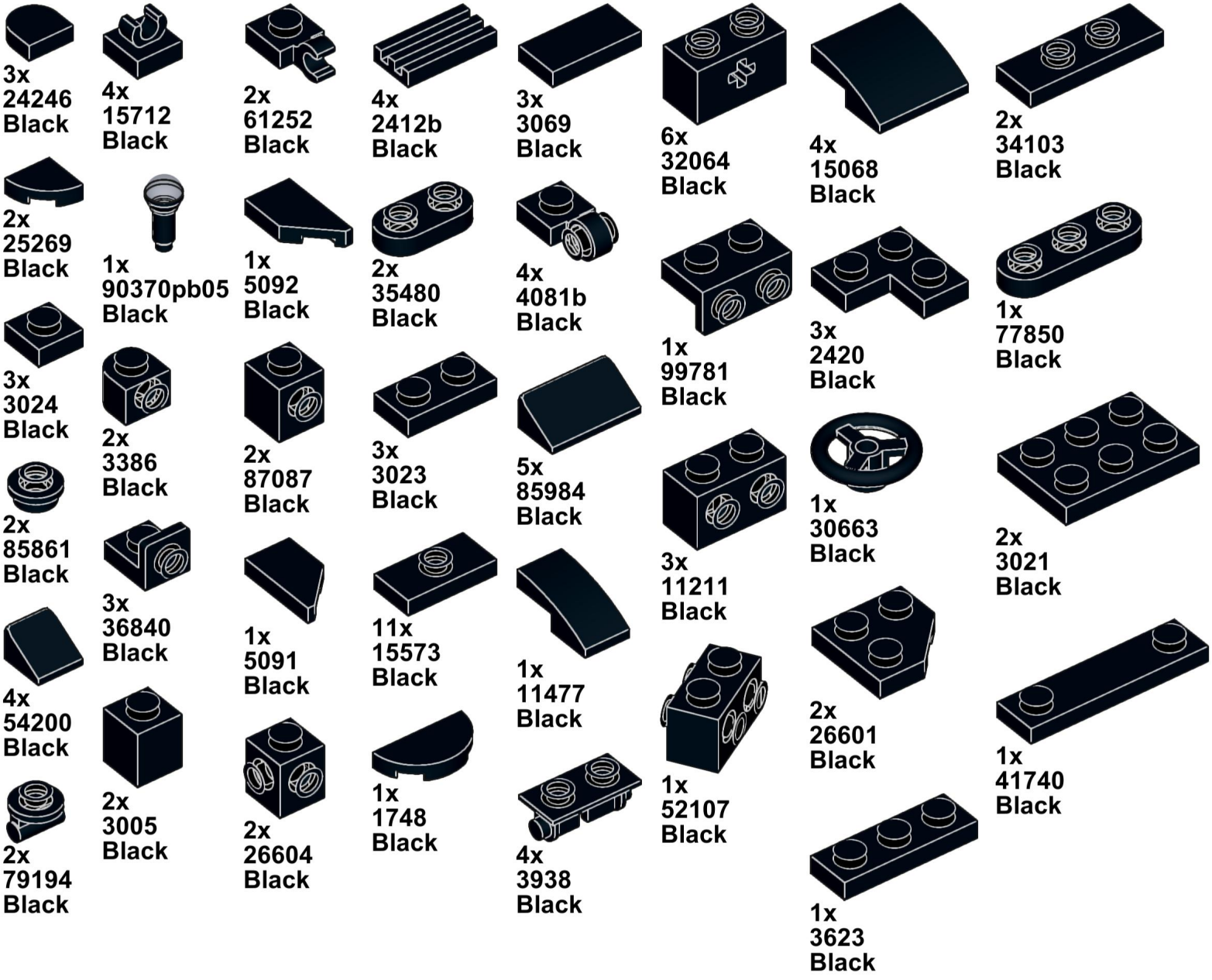
3x
24246
Black
4x
15712
Black
2x
61252
Black
4x
2412b
Black
3x
3069
Black
6x
32064
Black
4x
15068
Black
2x
34103
Black
2x
25269
Black
1x
90370pb05
Black
1x
5092
Black
2x
35480
Black
4x
4081b
Black
1x
99781
Black
3x
2420
Black
1x
77850
Black
3x
3024
Black
2x
3386
Black
2x
87087
Black
3x
3023
Black
5x
85984
Black
3x
11211
Black
1x
30663
Black
2x
3021
Black
2x
85861
Black
3x
36840
Black
1x
5091
Black
11x
15573
Black
1x
11477
Black
2x
26601
Black
4x
54200
Black
2x
3005
Black
2x
26604
Black
1x
1748
Black
4x
3938
Black
1x
52107
Black
1x
3623
Black
1x
41740
Black
2x
79194
Black

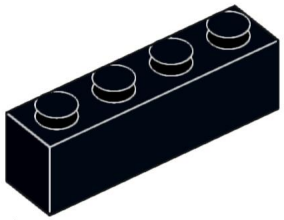

1x
3010
Black



1x
3666
Black

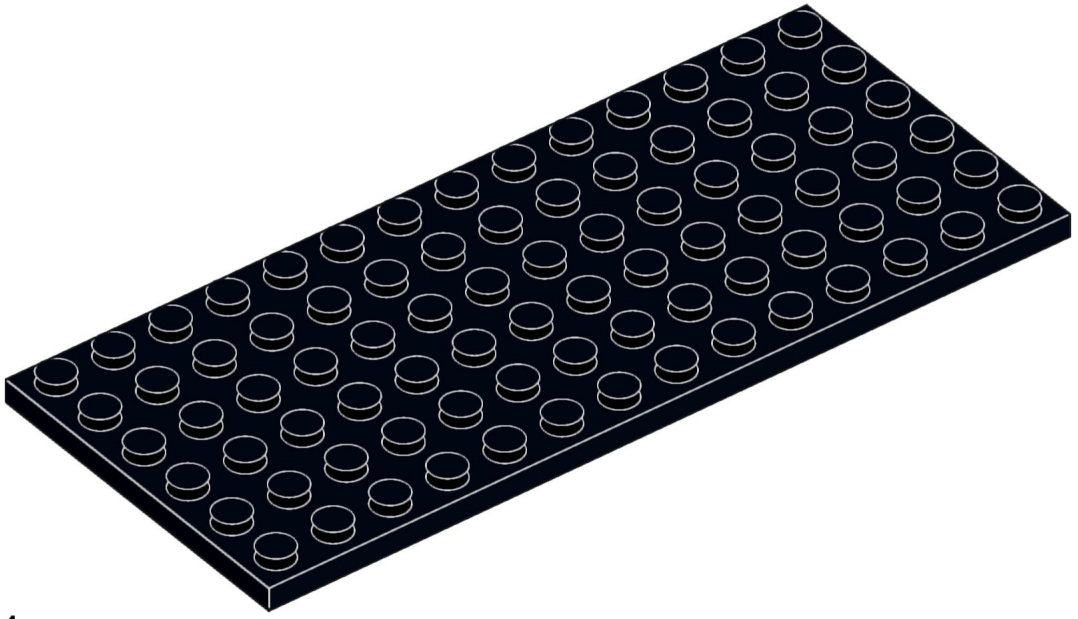

1x
3456
Black



1x
89678
Dark Bluish Gray



1x
20482
Dark Bluish Gray



2x
4070
Dark Bluish Gray



2x
87087
Dark Bluish Gray



1x
36841
Dark Bluish Gray

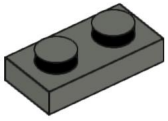

2x
3023
Dark Bluish Gray

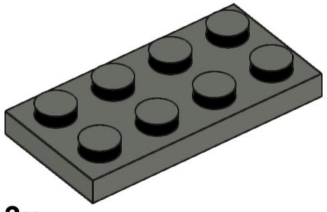

3x
3020
Dark Bluish Gray

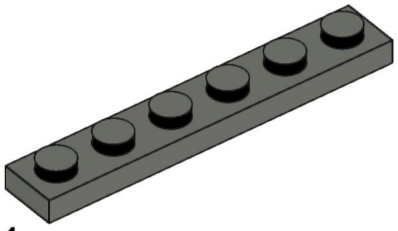

1x
3666
Dark Bluish Gray

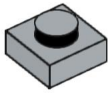

5x
3024
Light Bluish Gray



2x
4073
Light Bluish Gray



4x
32828
Light Bluish Gray

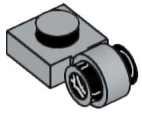

1x
4081b
Light Bluish Gray

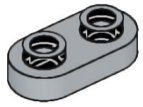

4x
35480
Light Bluish Gray

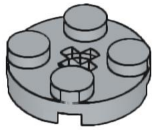

2x
4032
Light Bluish Gray

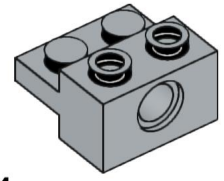

4x
73109
Light Bluish Gray

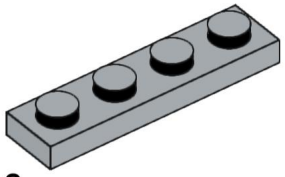

2x
3710
Light Bluish Gray



3x
98138
Dark Red



2x
3024
Dark Red

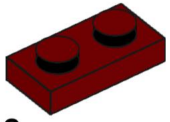

2x
3023
Dark Red

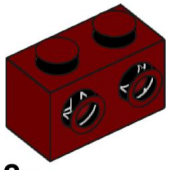

2x
11211
Dark Red



4x
98138
Red

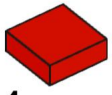

4x
3070
Red

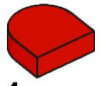

4x
24246
Red



6x
25269
Red



6x
4073
Red

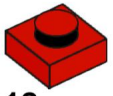

12x
3024
Red

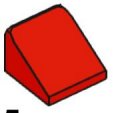

5x
54200
Red

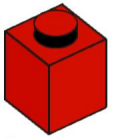

2x
3005
Red



2x
36840
Red

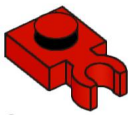

2x
4085d
Red

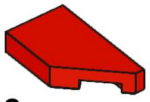

2x
5092
Red

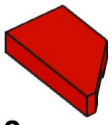

2x
5091
Red

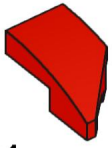

1x
29120
Red

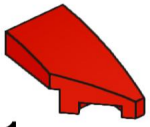

1x
29119
Red

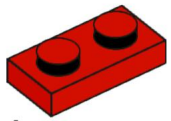

4x
3023
Red



2x
35480
Red

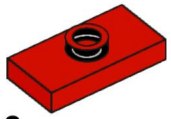

2x
15573
Red

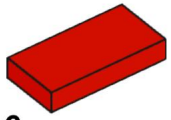

6x
3069
Red

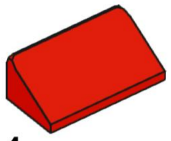

4x
85984
Red

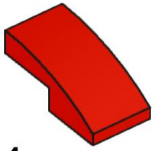

4x
11477
Red

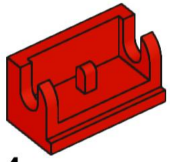

4x
3937
Red

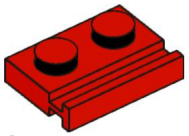

3x
32028
Red

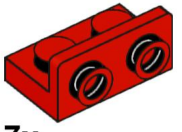

7x
99780
Red

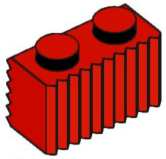

4x
2877
Red



6x
73825
Red

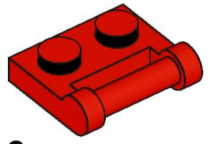

2x
48336
Red

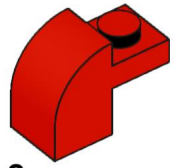

2x
6091
Red

2x
14719
Red

4x
26601
Red

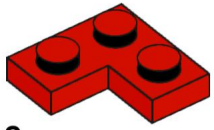

2x
2420
Red

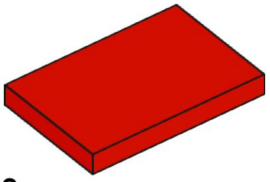

3x
26603
Red

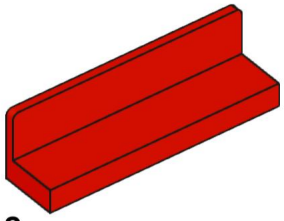

2x
30413
Red

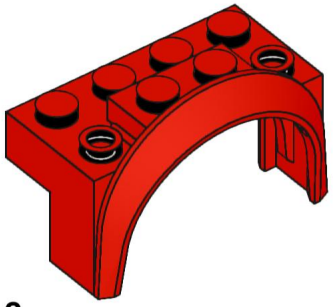

2x
3387
Red



2x
35480
Dark Tan

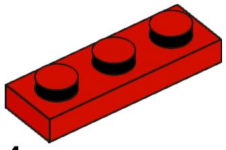

4x
3623
Red

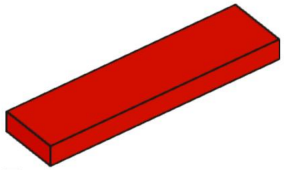

7x
2431
Red

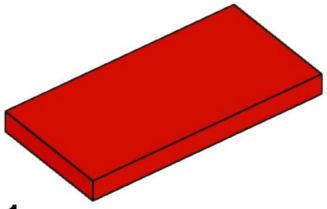

1x
87079
Red

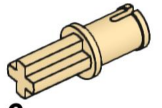

6x
3749
Tan

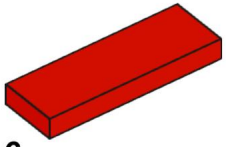

6x
63864
Red

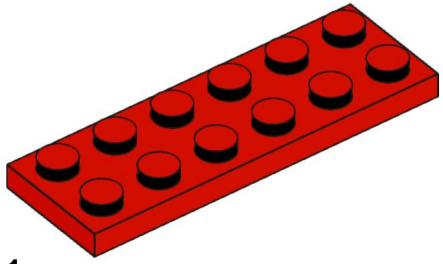

1x
3795
Red

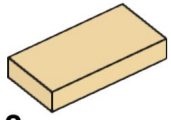

2x
3069
Tan

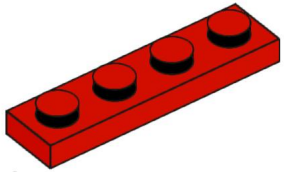

1x
3710
Red

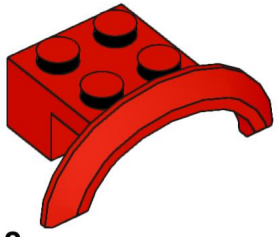

2x
98282
Red

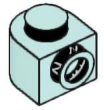

6x
3386
Light Aqua

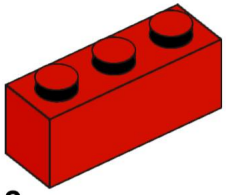

2x
3622
Red

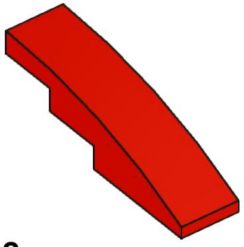

2x
61678
Red

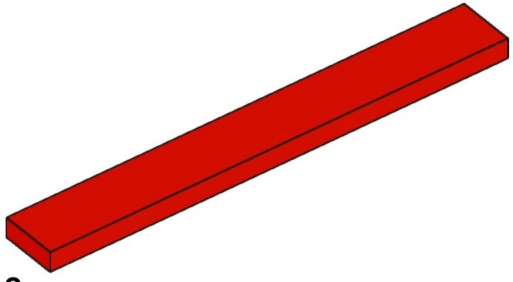

2x
4162
Red



2x
25269
Trans-Clear



2x
4073
Trans-Clear



2x
5264
Trans-Clear

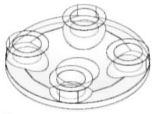

2x
2654
Trans-Clear

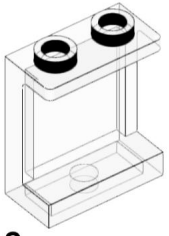

2x
87552
Trans-Clear

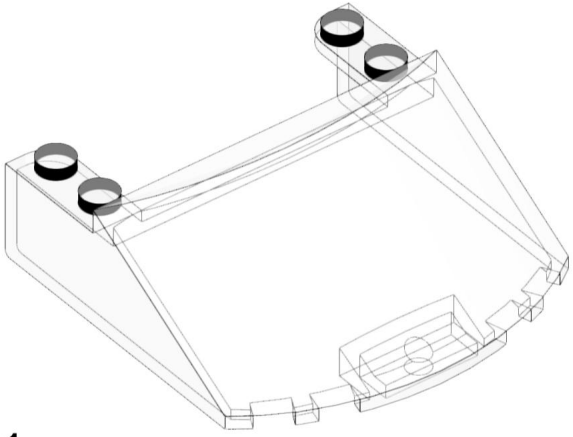

1x
65632
Trans-Clear



1x
24246
Flat Silver

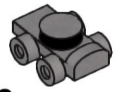

2x
11253
Flat Silver

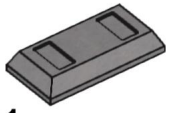

1x
99563
Flat Silver

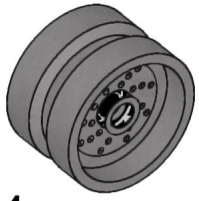

4x
66727
Flat Silver



4x
18977
Rubber Black