ALL PLUMBING TO
2023 FBC
10/27/2025, 4:16:07 PM
Robert Tippett
1025-06036

ALL BUILDING TO
2023 FBC
10/28/2025, 4:15:18 PM
Eddie Willeford
1025-06036

ARCHITECTURAL NARRATIVE:

- CONTINUE THE DIVERSITY AND INDIVIDUALITY OF ARCHITECTURE WITHIN THE COMMUNITY.
- STYLES: 'ORIGINAL' CONTEMPORARY HOME DESIGNS BASED ON HISTORICAL ARCHITECTURE WITHIN THE FLORIDA VERNACULAR.
  - Craftsman
- UNIQUE HOME CHARACTER THROUGHOUT EACH EXTERIOR FACADE.
- OPEN CONCEPT FLOOR PLANS, PROVIDING DIVERSE LIVING SPACES.
- SIMPLIFIED, APPROPRIATE DETAILING TO EXTERIOR STYLES.
- SIMPLE, WELL PROPORTIONED ARCHITECTURAL FORMS.
- WELL PROPORTIONED HORIZONTAL AND VERTICAL MASSING.
- ASYMMETRICAL HEIGHT VARIABLES TO PROVIDE VISUAL INTEREST (inviting)
- APPROPRIATE LOCATIONS OF TRANSPARENCY/GLAZING TO ALL SIDES OF HOME, TO MAINTAIN ARCHITECTURAL INTEGRITY, AND ALSO TO PROVIDE LIVING SPACE VIEWS AND NATURAL LIGHT.
- SOFT COLORS TO PROVIDE A RELAXING TONE, AND TO COMPLIMENT THE ARCHITECTURE.
- EXTENDED EAVE ACCENTS, APPROPRIATE TO ARCHITECTURAL STYLES.
- MASONRY INSTALLED WINDOWS TO PROVIDE RECESSED RELIEF OF FACADE (est. 3-3/4")

OWNER:

CARDEL HOMES
3160 S. Falkenburg Road
Riverview, FL 33578

Ph# 1-813-612-8001

ENGINEER:

VORTEX ENGINEERING, LLC.
7001 Temple Terrace Highway
Tampa, FL 33637

Ph# 1-877-686-7839
COA# 28035

ALL ELECTRICAL TO
2020 NEC
10/30/2025, 3:06:10 PM
Ray Proctor
1025-06036

CONTRACTOR:

CARDEL US MANAGEMENT, LLC
3160 S. Falkenburg Road
Riverview, FL 33578

License Number:
CGC1528551

Ph# 1-813-612-8001

DESIGNER:

JASON ROBERT WAMSLEY

3160 S. Falkenburg Road
Riverview, FL 33578

Ph# 1-813-612-8001

Waverly - '2916'

ALL MECHANICAL TO
2023 FBC
11/5/2025, 3:59:36 PM
Josh Freeman
1025-06036

MECHANICAL - BLOWER DOOR TEST REQUIRED
PER:FBC-ENERGY CODE (R402.4.1.2)
11/5/2025, 3:59:44 PM
Josh Freeman
1025-06036

TABLE OF CONTENTS:

- CS - Sheet 1 of 1: Cover Sheet
- A1.1 - Sheet 1 of 8: Main Floor Plan layout
- A2.1 - Sheet 2 of 8: Elevation 'C' - Craftsman
- T1.1 - Sheet 3 of 8: Roof Truss Layout - Elevation 'C' - Craftsman
- E1.1 - Sheet 4 of 8: Electrical Plan
- F1.1 - Sheet 5 of 8: Foundation Plan
- D1.1 - Sheet 6 of 8: Plan Detailed Sections
- D1.2 - Sheet 7 of 8: Details and Notes
- D1.3 - Sheet 8 of 8: Details and Notes

- S1 - Engineer Details
- S2 - Engineer Details
- S3 - Engineer Details
- S6 - Engineer Details
- N1 - Engineer Notes Sheet

PROPERTY & PLAN NOTES:

- IT IS THE INTENT THAT THESE DRAWINGS BE IN CONFORMANCE WITH THE FLORIDA BUILDING CODE (Residential) 8th EDITION, THE 2020 N.E.C. AND ALL APPLICABLE LOCAL, COUNTY, STATE AND FEDERAL CODES, ORDINANCES, LAWS, REGULATIONS AND RESTRICTIVE COVENANTS GOVERNING THE SITE WORK.
- OCCUPANCY: SINGLE FAMILY RESIDENTIAL GROUP R-3
- TYPE OF CONSTRUCTION: III-B
- ONE STORY DWELLING
- FLOOD ZONE:
- ZONING DISTRICT:
- MAP/FIRM PANEL No.:
- BASE FLOOD ELEVATION:
- MAIN FLOOR LIVING SPACE FINISHED FLOOR (D.F.E. - DESIGN FLOOD ELEVATION) TO BE AT **** NAVD 1988.
  ELEVATION VERTICAL DATUM IS REFERENCED TO NAVD 1988.
- UTILITIES AND ATTENDANT EQUIPMENT TO BE PLACED ABOVE BASE FLOOD ELEVATION.
- FLOOD DAMAGE-RESISTANT MATERIALS SHALL BE PROVIDED BELOW THE BASE FLOOD ELEVATION, PLUS REQUIRED FREEBOARD.
- ULTIMATE DESIGN SPEED - 140 mph
- RISK CATEGORY II-B
- WIND EXPOSURE C
- IT IS THE RESPONSIBILITY OF THE GENERAL CONTRACTOR TO DETERMINE ERECTION PROCEDURES, MEANS AND METHODS, AND SEQUENCE OF CONSTRUCTION.
- THE GENERAL CONTRACTOR SHALL FURNISH ANY AND ALL REPORTS RECEIVED FROM THE GEO-TECHNICAL ENGINEER (SOIL REPORTS), ON THE STUDY OF THE PROPOSED SITE, TO THE STRUCTURAL ENGINEER. IN THE EVENT THE GEO-TECHNICAL REPORTS DO NOT EXISTS, THE SOIL CONDITIONS SHALL BE ASSUMED TO BE A MINIMUM DESIGN SOIL PRESSURE STATED BY THE STRUCTURAL ENGINEER OF RECORD FOR THE PURPOSE OF STRUCTURAL DESIGN. THE GENERAL CONTRACTOR SHALL ASSURE THE SOIL CONDITIONS MEET OR EXCEED THIS CRITERIA.

Version 1.0

SQ. FT. TABULATION

LIVING SPACE	2906
GARAGE	607
ENTRY	86
LANAI	307
TOTAL UNDER ROOF	3906

CARDEL HOMES
JRW 09/05/2025
Scale: 3/16" = 1'-0"

I HEREBY CERTIFY THAT I HAVE REVIEWED THE ATTACHED DESIGN, AND FIND IT TO BE IN COMPLIANCE WITH SECTION R 301 OF THE FLORIDA BUILDING CODE (8th EDITION)
SEALED FOR STRUCTURE ONLY
Asbed A. Avedikian, P.E. - FL REG # 86623
Andrew J. Meisheid, P.E. - FL REG # 83217

Vortex Engineering, LLC.
7001 Temple Terrace Highway
Tampa, Florida 33637
Ph# 1-877-6VORTEX (1-877-686-7839)
COA# 28035

Lot 166 of Southwind

ASBED ANTRANIK AVEDIKIAN
LICENSE No. 86623
STATE OF FLORIDA
PROFESSIONAL ENGINEER

I AGREE TO THE SPECIFIED PORTIONS OF THIS DOCUMENT. THIS ELECTRONIC SEAL APPLIES ONLY TO THOSE SHEETS CONTAINING THE ENGINEER'S NAME BLOCK. SEALED FOR FOR STRUCTURAL ONLY. NON-STRUCTURAL ITEMS ARE SHOWN FOR ILLUSTRATION AND CLARIFICATION ONLY.

This item has been digitally signed & sealed by Asbed Antranik Avedikian, PE on the date adjacent to the seal. Printed copies of this document are not considered signed & sealed, thus the signature must be verified on any electronic copies.
Vortex Engineering, LLC., 7001 Temple Terrace Highway, Tampa, Florida 33637
2025.10.16 10:51:18-04'00'

Project Address:
503 Spring Harvest Dr,
Plant City, FL. 33566

Sheet 1 of 1

CS.1

WALL LEGEND

8" C.M.U. WALL
(see plan for height)

INTERIOR FRAME BEARING WALL

INTERIOR FRAME WALL (4" typ.)

- □ —— REPRESENTS (1) #5 BAR VERTICAL CONT. IN CONC. FILLED CELL. (STEMWALL) note: bend into upper slab 24" or bond beam
- ■ —— REPRESENTS (1) #5 BAR VERTICAL CONT. IN CONC. FILLED CELL.
- ▣ —— REPRESENTS (2) #5 BAR VERTICAL CONT. IN CONC. FILLED CELL.

General Notes:

- All Girders/Beams to be continuously supported by (3) 2x4 B.U.C. w/(1) HTT4 @ base u.n.o.

- All headers to be (2)2x12 u.n.o. w/(2) CS 16 @ each end. Provide (2) 2x4 cripple studs @ each end & (1) king stud w/(1) HTT4 @ each base.

LINTEL TYPES/ SECTIONS

PC1	PC3	PC4	PC5
8" FILLED (1) #5	16" FILLED (1) #5 TOP	16" FILLED (1) #5 TOP (1) #5 BTM.	24" FILLED (1) #5 TOP (1) #5 MIDDLE (1) #5 BTM.

PRE-CAST AND PRE-STRESSED CONCRETE COMPONENTS SHALL BE USED AND INSTALLED PER MANUFACTURER'S SPECIFICATIONS. PRE-CAST LINTELS HAVE BEEN REVIEWED AND PLACED BASED ON DESIGN ALLOWABLE LOAD INFORMATION PROVIDED BY CAST CRETE. THEREFORE, CAST CRETE IS A DELEGATED ENGINEER FOR THIS PROJECT. ENGINEER OF RECORD MUST APPROVE IN WRITING ANY CHANGE IN LINTEL MANUFACTURER. ALL OTHER STRUCTURAL PRE-CAST COMPONENT MANUFACTURERS MUST SUBMIT DESIGN LOAD INFORMATION TO ENGINEER OF RECORD FOR APPROVAL. ENGINEER OF RECORD RESERVES THE RIGHT TO MAKE ANY CHANGES AFTER SUCH INFORMATION HAS BEEN PROVIDED FOR REVIEW. CONTRACTOR, AS PROJECT COORDINATOR, SHALL BE RESPONSIBLE FOR INSURING INFORMATION REQUESTED ABOVE HAS BEEN SUBMITTED TO ENGINEER OF RECORD IN A TIMELY MANNER WHEN AVAILABLE.

ALL PLUMBING, ELECTRICAL, AND MECHANICAL ROUGH-INS MUST BE COMPLETE, INSPECTED, AND APPROVED BEFORE REQUESTING THE FRAMING INSPECTION.

▣ - REPRESENTS 3-2X4 S.Y.P. POST U.N.O.

ALL EXTERIOR WALLS TO BE CONSIDERED SHEAR RESISTING COMPONENTS

NOTE: TERMITE TREATMENT FOR THIS PROJECT IS TO BE BORA-CARE FOLLOWING MANUFACTURER SPECS.

ALL WOOD LOAD BEARING HEADERS TO BE (2) 2X12 S.Y.P. U.N.O.

NOTE: PLAN LOCATED CONTROL JOINTS ARE RECOMMENDED LOCATIONS BY THE ENGINEER, BUT ARE NOT REQUIRED TO BE INSTALLED.

NOTE: REFER TO SHEETS S1, S2, S3,S6 AND N1 FOR STANDARD DETAILS AND NOTES.

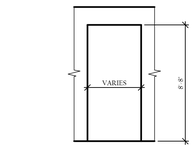

TYPICAL BULKHEAD DETAIL

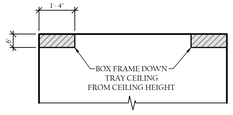

FOYER TRAY CEILING DETAIL

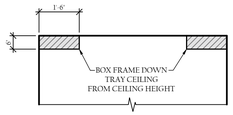

PRIMARY BED/DEN TRAY CEILING DETAIL

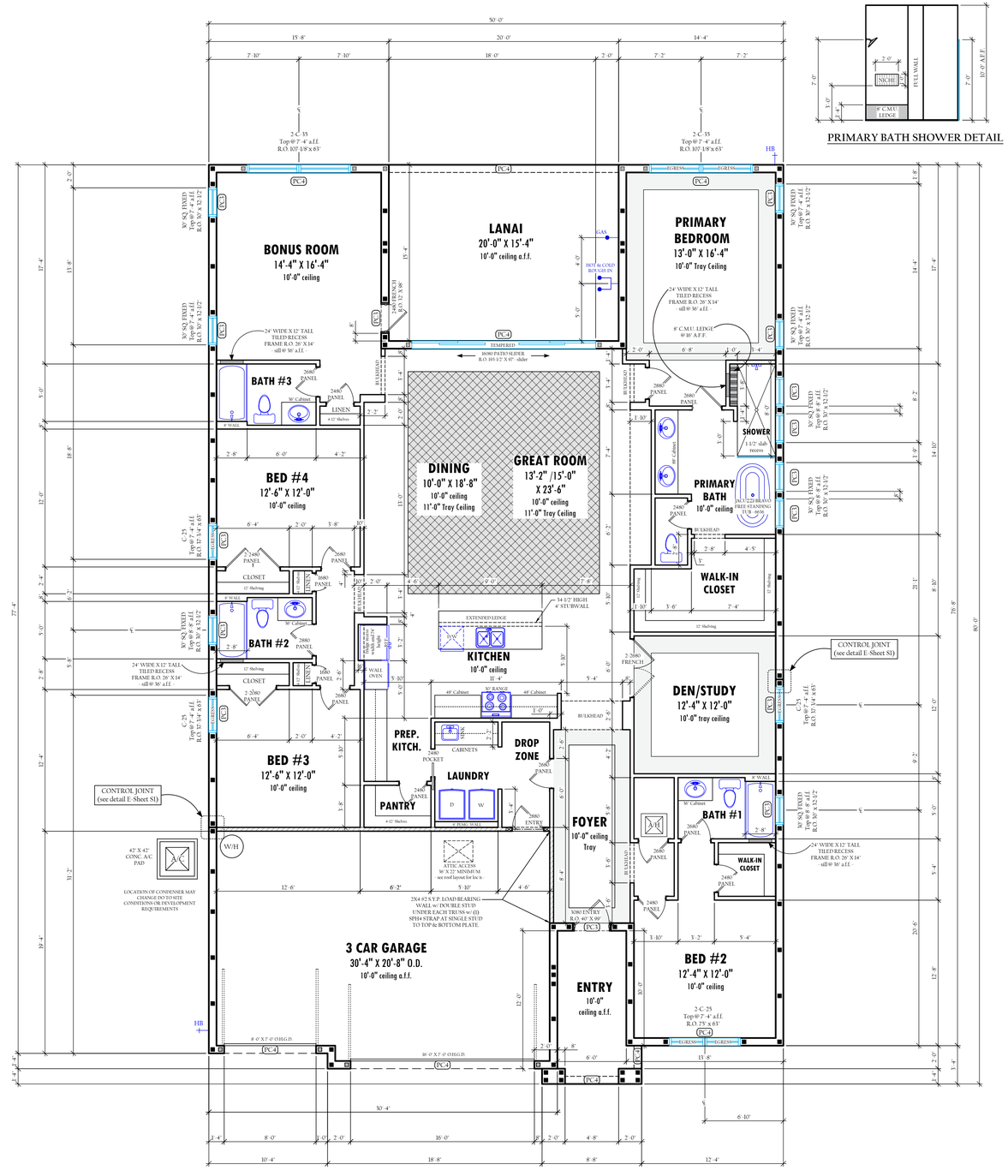

PRIMARY BATH SHOWER DETAIL

MAIN FLOOR PLAN

MAIN FLOOR BLOCK HEIGHT - 10'-0" a.f.f.

- Waverly -
'2916'

Version 1.0

SQ. FT. TABULATION	
LIVING SPACE	2906
GARAGE	607
ENTRY	86
LANAI	307
TOTAL UNDER ROOF	3906

CARDEL HOMES

JRW — 03/03/2025

Scale: 3/16" = 1'-0"

I HEREBY CERTIFY THAT I HAVE REVIEWED THE ATTACHED DESIGN, AND FIND IT TO BE IN COMPLIANCE WITH SECTION R 301 OF THE FLORIDA BUILDING CODE, 8th EDITION

SEALED FOR STRUCTURE ONLY

Ashed A. Avedikian, P.E. - FL REG # 86623	
Andrew J. Metsheuil, P.E. - FL REG # 83217	

Vortex Engineering, LLC.
7001 Temple Terrace Highway
Tampa, FL 33637
Ph# 1-877-6VORTEX (686-7839)
COA# 28035

Lot 166 of Southwind

Project Address:
503 Spring Harvest Dr,
Plant City, FL. 33566

Sheet 1 of 9

A1.1

NOTE: STORE FRONT MATERIAL AND CONNECTIONS PER MANUFACTURER SPECIFICATIONS. SEE PRODUCT APPROVAL INSTALLATION SPECIFICATIONS.

CODE NOTE: FAC 309.4 (applies to all sales center doors)

OPERATION (operable parts - door handles) - Operable parts shall be operable with one hand and not require tight grasping, pinching, or twisting of the wrist. The force required to activate the operable part shall be 5 pounds (22.2N) maximum.

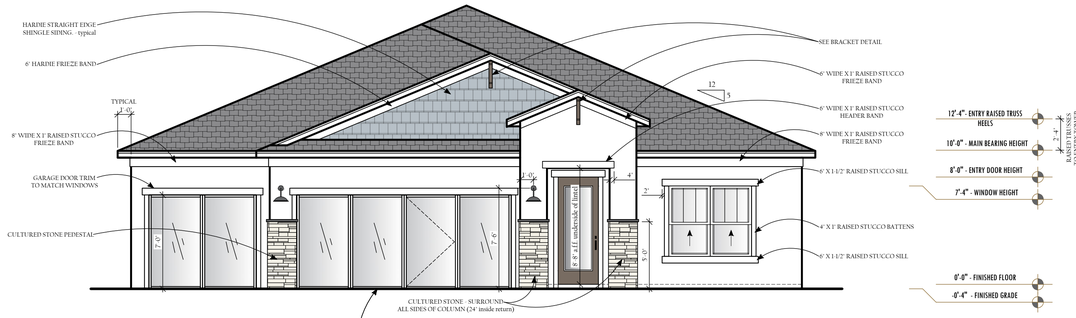

FRONT ELEVATION 'C' - Craftsman w/ Temp. Sales Center

FLORIDA VERNACULAR

FBC 2023 - 8th Edition - FLORIDA PRODUCT APPROVAL LIST

Approved Application #'s	Product Manufacturer's	Product Category's	Product Subcategory's	Product Description	Approved Date	Expiration Date
FL 7237-R10	Kawneer Company, Inc.	Panel Walls	Store Fronts	Trifab 450/451 Aluminum Storefront & Entryway System	12/12/2023	12/31/2026

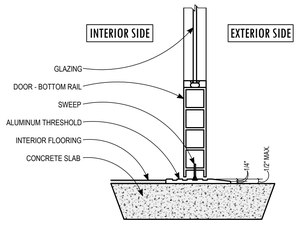

STORE FRONT ENTRY DOOR THRESHOLD DETAIL

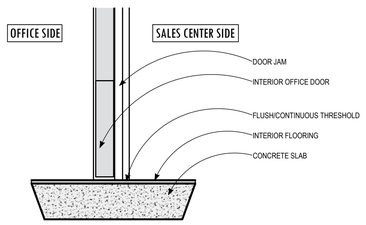

OFFICE THRESHOLD DETAIL

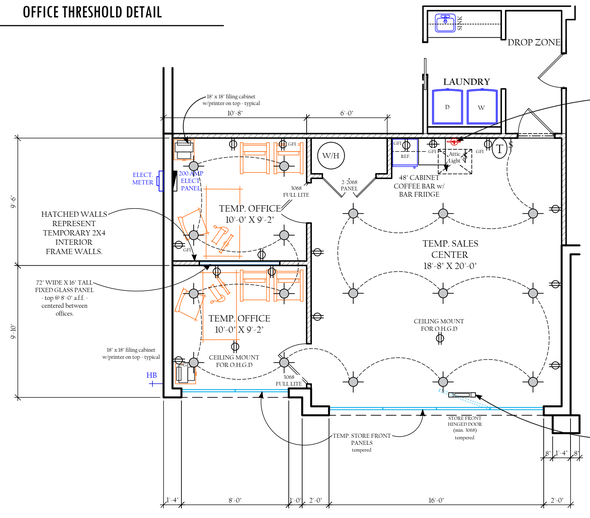

TEMPORARY SALES CENTER - FLOOR PLAN/ELECTRICAL

LOCATED IN GARAGE - 624 sq. ft.

NOTE: FIRE EXTINGUISHER, WITH CURRENT CERTIFICATION TAG, SHALL BE VISIBLY MOUNTED PER THE FFPC 7th EDITION.

ALL PROJECTS/WORK SHALL COMPLY WITH THE CURRENT ADOPTED EDITION OF THE FLORIDA FIRE PREVENTION CODE (FFPC), AND APPLICABLE CODES AND STANDARDS.

NFPA 1 CHAPTER 16, 18 AND NFPA 241 COMPLIANCE REQUIRED.

PER FFPC, NFPA 1:1.14.4 - REVIEW AND APPROVAL BY THE AHJ SHALL NOT RELIVE THE APPLICANT OF THE RESPONSIBILITY OF COMPLIANCE WITH THIS CODE. FINAL APPROVAL IS SUBJECT TO FIELD INSPECTION. ADJUSTMENTS MAY BE REQUIRED FOR CODE COMPLIANCE.

PARTIAL FIRE FINALS ARE NOT APPROVED.

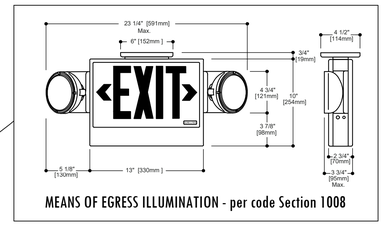

MEANS OF EGRESS ILLUMINATION - per code Section 1008

SQ. FT. TABULATION

LIVING SPACE	2906
GARAGE	607
ENTRY	86
LANAI	307
TOTAL UNDER ROOF	3906

- Waverly -
'2916'

Version 1.0

CARDEL HOMES
09/05/2025
JRW

Scale: 3/16" = 1'-0"

I HEREBY CERTIFY THAT I HAVE REVIEWED THE ATTACHED DESIGN, AND FIND IT TO BE IN COMPLIANCE WITH THE FLORIDA BUILDING CODE 8th EDITION

SEALED FOR STRUCTURE ONLY

Asbed A. Avedikian, P.E. - FL REG # 86623
Andrew J. Metsheid, P.E. - FL REG # 83217

Vortex Engineering, LLC.
7001 Temple Terrace Highway Tampa, Florida 33637
Ph# 1-877-6VORTEX (1-877-686-7839)
COA# 28035

Lot 166 of Southwind

Project Address:
503 Spring Harvest Dr,
Plant City, FL. 33566

Sheet 2 of 9

A1.2

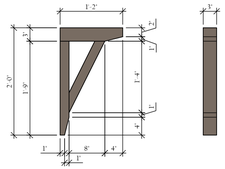

NOTE: CONSTRUCT BRACKET w/ HD-FOAM CASTING - smooth finish

GABLE END - KNEE BRACKET DETAIL

N.T.S.

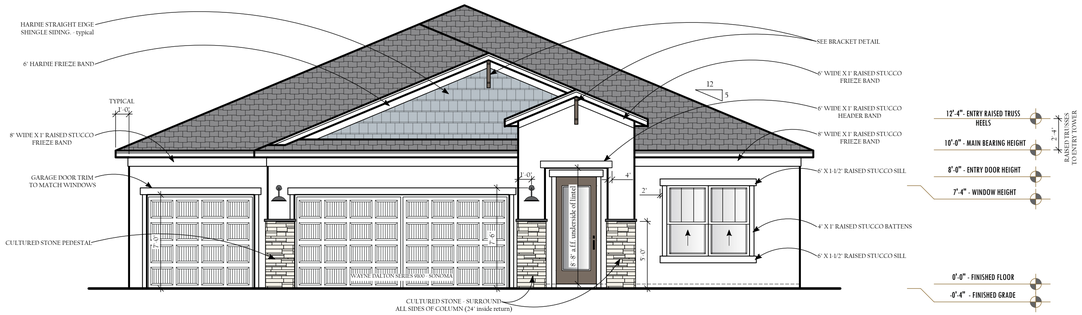

FRONT ELEVATION 'C' - Craftsman

FLORIDA VERNACULAR

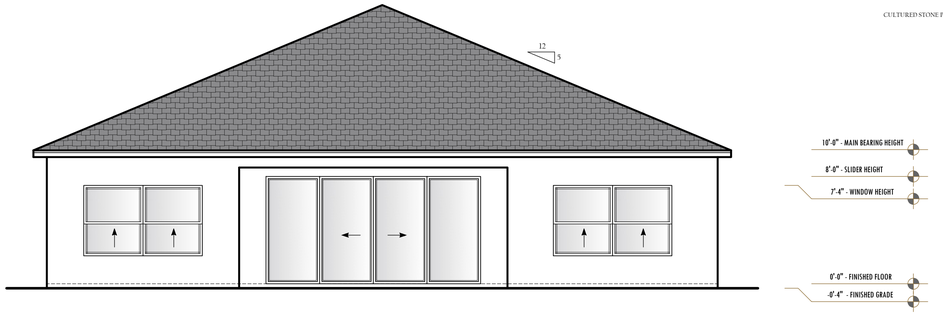

REAR ELEVATION 'C' - Craftsman

FLORIDA VERNACULAR

GENERAL EXTERIOR ELEVATION NOTES:

* 30 YR. DIMENSIONAL ASPHALT SHINGLE ROOF (typical)
* OVERHANGS 12" UNLESS NOTED OTHERWISE (typical)
* 5/12 ROOF PITCH (typical) - see elevations to confirm roof slope variables
* STUCCO/PLASTER EXTERIOR WALL FINISH (typical)
* STUCCO RAISED BATTENS/BANDINGS PER ELEVATION NOTES/DETAILS
* HARDIE TRIM GABLE ACCENTS
* HARDIE STRAIGHT EDGE SHINGLE SIDING TO GABLE END
* CULTURED STONE ACCENTS - where shown and noted
* STUCCO/CEMENT PLASTER FINISH OVER CONCRETE MASONRY TO BE 1/2" THICK (2 COAT APPLICATION) STUCCO SYSTEM PER ASTM STANDARDS
* FLASHING TO BE INSTALLED AT WALL AND ROOF INTERSECTIONS, AT GUTTERS, AT ALL CHANGES IN ROOF SLOPE AND/OR DIRECTION, AND AROUND ROOF OPENINGS
* WINDOW PAN FLASHING SHALL BE INSTALLED IN ACCORDANCE WITH FBC 8th EDITION 2023 (Residential) R 703.4
* WATER-RESISTANT BARRIERS TO BE INSTALLED IN ACCORDANCE WITH FBC 8th EDITION 2020(Residential) R 703.7.3 WATER RESISTIVE BARRIERS INSTALLED OVER WOOD BASED SHEATHING SHALL INCLUDE A WATER RESISTIVE VAPOR PERMEABLE BARRIER EQUIVALENT TO 2 LAYERS OF GRADE 'D' PAPER. IN ACCORDANCE WITH FBC 8th EDITION 2023 (Residential) R 703.4, ANY FLASHING INTENDED TO DRAIN THE WATER-RESISTANT BARRIER IS DIRECTED BETWEEN THE LAYERS AND SHALL UTILIZE 30 LB FELT.
* ROOF COVERING UNDERLAYMENT APPLICATION SHALL BE INSTALLED IN ACCORDANCE WITH FBC 8th EDITION (Residential) R905.1.1
* ROOF BAFFLING TO BE INSTALLED PER FBC-ENERGY CODE R 303.2.1 OR R 402.2.3

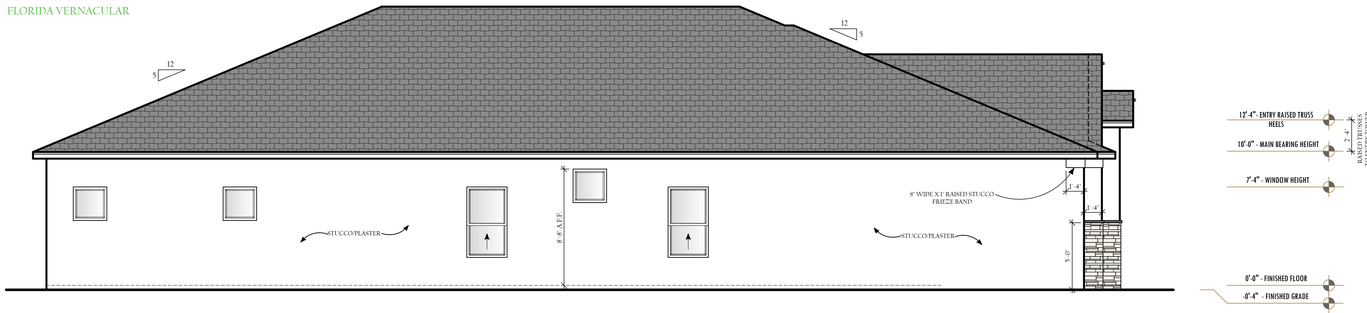

LEFT ELEVATION 'C' - Craftsman

FLORIDA VERNACULAR

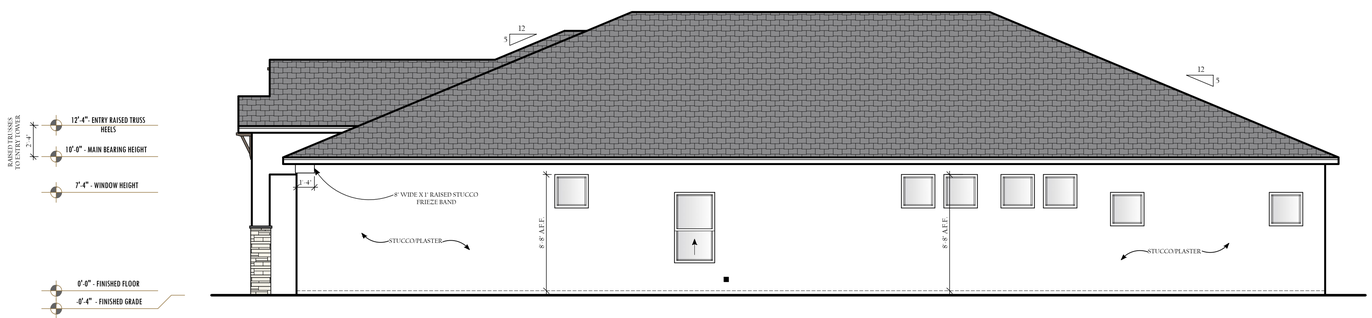

RIGHT ELEVATION 'C' - Craftsman

FLORIDA VERNACULAR

- Waverly -
'2916'

Version 1.0

CARDEL HOMES

09/05/2025

JRW

Scale: 3/16" = 1'-0"

I HEREBY CERTIFY THAT I HAVE REVIEWED THE ATTACHED DESIGN, AND FIND IT TO BE IN CONFORMANCE WITH THE FLORIDA BUILDING CODE, 7th EDITION

SEALED FOR STRUCTURE ONLY

Asbed A. Avedikian, P.E. - FL REG # 86623

Andrew J. Meisheid, P.E. - FL REG # 83217

Vortex Engineering, LLC.
7001 Temple Terrace Highway
Tampa, FL 33637
Ph# 1-877-6VORTEX (686-7839)
COA# 28035

Lot 166 of Southwind

Project Address:
503 Spring Harvest Dr,
Plant City, FL. 33566

A2.1

NOTE: STAPPING SHOWN IS PRELIMINARY. CONTRACTOR TO CONFIRM ADEQUACY OF STRAPPING SUGGESTED WITH ACTUAL UPLIFTS NOTED ON SIGNED AND SEALED TRUSS PACKAGE FOR THIS STRUCTURE.

THE ENGINEER HAS NOT REVIEWED THE PRE-ENGINEERED TRUSS MANUFACTURER'S LAYOUT TO DETERMINE ANY LOAD BEARING CONDITIONS AND RESERVES THE RIGHT TO MAKE ANY CHANGES AFTER TRUSS LOAD INFORMATION IS SUPPLIED TO THE ENGINEER.

UPON REVIEW, ENGINEER OF RECORD WILL PROVIDE A REVIEW LETTER INDICATING ANY CHANGE IN STRAPPING OR SUPPORT BASED ON THAT REVIEW. CONSTRUCTION COMMENCING PRIOR TO ENGINEER'S REVIEW IS SUBJECT TO MODIFICATION BASED ON REVIEW LETTER.

FRAMING PLAN IS DIAGRAMMATIC IN NATURE AND IS PROVIDED FOR ILLUSTRATION PURPOSES ONLY. TRUSS MANUFACTURER TO PROVIDE SEPARATE LAYOUT AND TRUSS COMPONENT DESIGN SIGNED AND SEALED BY A FLORIDA REGISTERED PROFESSIONAL ENGINEER.

ALL TRUSS TO TRUSS CONNECTIONS SUPPLIED BY TRUSS MANUFACTURER UNLESS NOTED OTHERWISE

ALL EXTERIOR WALLS TO BE CONSIDERED SHEAR RESISTING COMPONENTS

SEE DETAIL O - SHEET S2 FOR TYPICAL NAILING SCHEDULE

ALL PRE-ENGINEERED WOOD PRODUCTS ARE THE RESPONSIBILITY OF THE TRUSS MANUFACTURER. THE TRUSS ENGINEER IS A DELEGATED ENGINEER FOR THIS PRODUCT, AND AS SUCH, IS RESPONSIBLE FOR THE VALIDITY OF THE COMPONENTS PROVIDED. FRAMING LAYOUTS SHOWN MAY BE CHANGED BY THE TRUSS MANUFACTURER. THE DELEGATED ENGINEER IS RESPONSIBLE FOR PROVIDING A FINAL SEALED SET OF ALL CALCULATIONS AND LAYOUTS FOR THIS PROJECT TO THE ENGINEER OF RECORD FOR REVIEW PRIOR TO MANUFACTURE OF SAID COMPONENTS. ENGINEER OF RECORD HAS NOT REVIEWED THE PRE-ENGINEERED TRUSS MANUFACTURER'S COMPONENTS AT THIS TIME AND RESERVES THE RIGHT TO MAKE ANY CHANGES AFTER SUCH INFORMATION HAS BEEN PROVIDED FOR REVIEW. CONTRACTOR, AS PROJECT COORDINATOR, SHALL BE RESPONSIBLE FOR ENSURING INFORMATION REQUESTED ABOVE HAS BEEN SUBMITTED TO ENGINEER OF RECORD IN A TIMELY MANNER WHEN AVAILABLE.

ALL PRE-ENGINEERED WOOD PRODUCTS SHALL BE VERIFIED BY THE TRUSS MANUFACTURER. TRUSS MANUFACTURER SHALL HAVE THE AUTHORITY TO MAKE SURSTITUTIONS FOR PRODUCTS SPECIFIED ON THE PLANS DUE TO AVAILABILITY OR ECONOMICS. CHANGES SPECIFIED BY THE TRUSS MANUFACTURER SHALL CONTROL. CHANGES MADE AFTER TRUSS ENGINEERING HAS BEEN PROVIDED TO ENGINEER OF RECORD MUST BE APPROVED BY THE ENGINEER OF RECORD.

ALL PRE-ENGINEERED TRUSSES TO BE DESIGNED USING THE MOST RECENT TPI CRITERIA. TRUSSES TO BE HANDLED AND INSTALLED USING THE MOST RECENT BCSI RECOMMENDATIONS. TEMPORARY AND PERMANENT BRACING SHALL BE PER MOST RECENT HIB RECOMMENDATIONS UNLESS NOTED OTHERWISE OR, MORE STINGENT CODE REQUIREMENTS APPLY. TRUSS ENGINEER IS RESPONSIBLE FOR INDICATING ALL TRUSS TO TRUSS CONNECTORS. ALL COMPONENTS TO BE DESIGNED FOR BOTH GRAVITY AND UPLIFT LOAD CASES, INCLUDING BEAM COMPONENTS.

ROOFING SYSTEM INFORMATION

ALL ROOF CLADDING PRODUCTS ARE THE RESPONSIBILITY OF THE MANUFACTURER. THE ROOF CLADDING MANUFACTURER IS RESPONSIBLE FOR THE VALIDITY OF THE COMPONENTS PROVIDED. ATTACHMENT INFORMATION GIVEN BY THE MANUFACTURER IS PROVIDED HEREIN. CONTRACTOR, AS PROJECT COORDINATOR, SHALL BE RESPONSIBLE FOR ENSURING THAT THE APPROPRIATE ROOFING MATERIAL IS USED AND THAT IT HAS BEEN INSTALLED PER MANUFACTURER'S SPECIFICATIONS SUCH THAT IT WILL WITHSTAND THE COMPONENTS AND CLADDING PRESSURES REQUIRED BY THE SEALED PLANS.

NOTE: REFER TO SHEETS S1, S2, S3, S6 AND N1 FOR STANDARD DETAILS AND NOTES.

TRUSS FASTENER LEGEND

1. SIMPSON HETA 20 w/ (10) 0.148" X 1-1/2" NAILS - PLACE STRAPS ON OPPOSITE SIDES OF TRUSS CENTERED IN MASONRY BOND BEAM (TYP. AT GIRDER TRUSS TO MASONRY CONNECTIONS)
2. (2) SIMPOSN HETA 20 w/ (10) 0.148" X 1-1/2" NAILS - PLACE STRAPS ON OPPOSITE SIDES OF TRUSS CENTERED IN MASONRY BOND BEAM (TYP. AT GIRDER TRUSS TO MASONRY CONNECTIONS)
3. SIMPSON HTS 20 w/ (24) 0.148" X 1-1/2" NAILS (TYP. AT TRUSS TO TOP PLATE FRAMING CONNECTIONS)
4. (2) SIMPSON HTS 20 w/ (24) 0.148" X 1-1/2" NAILS EACH - INSTALL STRAPS DIAGONALLY FROM EACH OTHER (TYP. AT GIRDER TRUSS TO TOP PLATE FRAMING CONNECTIONS)
5. SIMPSON LTA2 w/ (10) 0.148" X 1-1/2" NAILS - OR USP LPTA w/ (13) 10d X 1-1/2"NAILS AT 32" O.C. ALONG INSIDE FACE OF GABLE END TRUSS BOTTOM CHORD (TYP. AT GABLE TRUSS TO MASONRY CONNECTIONS)
6. SIMPSON HGA10 w/ (4) 1/4" X 1-1/2" SDS SCREWS TO TRUSS AND TO THE TOP PLATE (TYP. AT 32" O.C. ALONG FRAME WALL GABLE END)

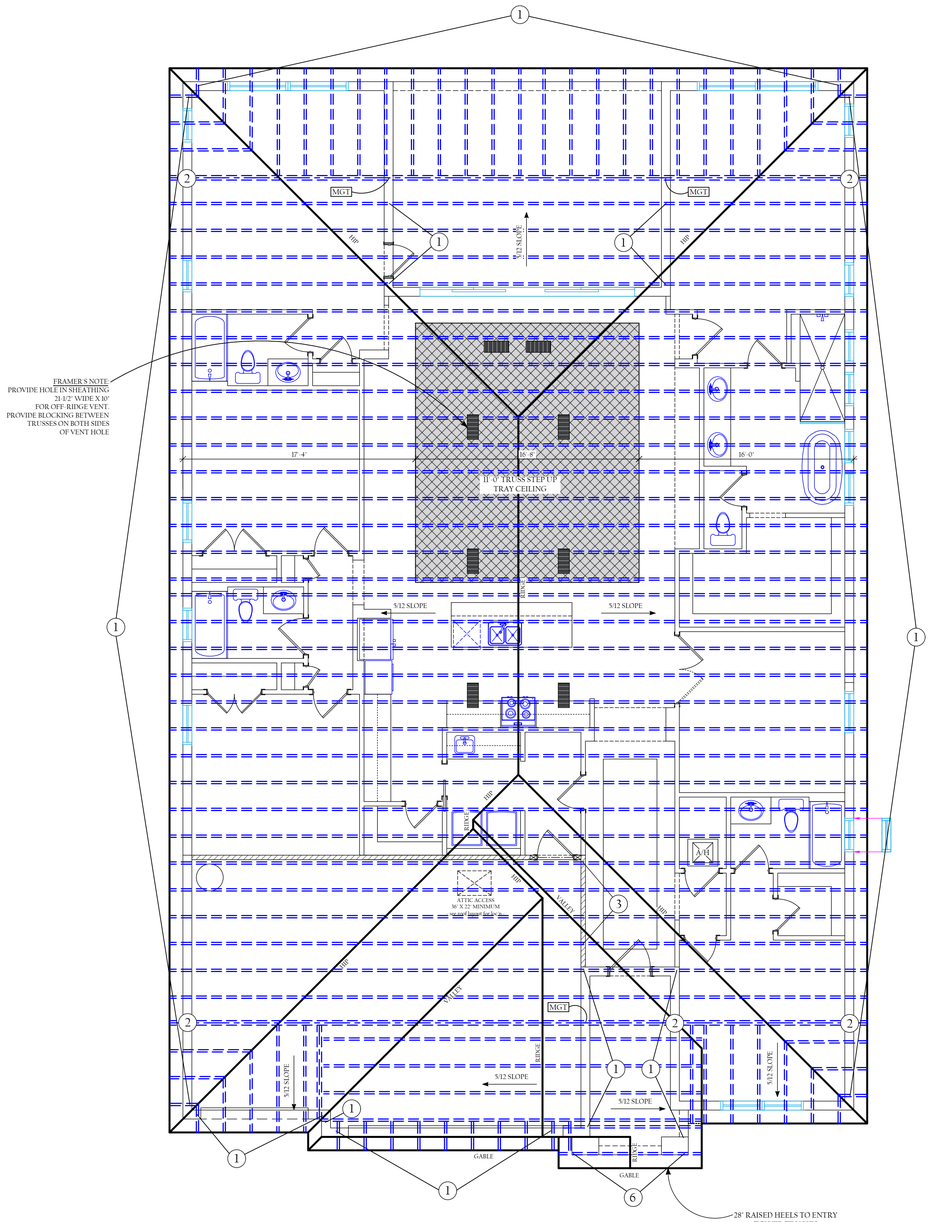

ROOF TRUSS LAYOUT - Elevation 'C'

ROOF VENTILATION CALCULATIONS:
ROOF CEILING AREA: 4170 SQ. FT. (600,480 inches divided by 300 = 2,002 sq. inches)
50% of vent area provided by eave venting (1001 sq. inches)
REQUIRED VENT AREA FOR OFF RIDGE VENTS: 1001 SQ.INCHES
8-LAMONCO 770-D VENTS - 140 sq. inches per unit
TOTAL VENTING FOR OFF RIDGE VENTS - 1120

- Waverly - '2916'

Version 1.0

CARDEL HOMES

08/05/2025

JRW

Scale: 3/16" = 1'-0"

I HEREBY CERTIFY THAT I HAVE REVIEWED THE ATTACHED DESIGN, AND FIND IT TO BE IN CONFORMANCE WITH SECTION 301.1 OF THE FLORIDA BUILDING CODE, 7th EDITION

SEALED FOR STRUCTURE ONLY

Asbed A. Avedikian, P.E. - FL REG # 86623

Andrew J. Meisheid, P.E. - FL REG # 82127

Vortex Engineering, LLC.
7001 Temple Terrace Highway
Tampa, FL 33637
Ph# 1 877 6VORTEX (686-7839)
COA# 28035

Lot 166 of Southwind

Project Address:
503 Spring Harvest Dr,
Plant City, FL. 33566

Sheet 4 of 9

T1.1

-CRAFTSMAN-

ELECTRICAL SCHEDULE

	DUPLEX RECEPTACLE
	DUPLEX RECEPTICAL MOUNTED ABOVE COUNTER TOPS @ 42"A.F.F.
	RECEPTACLE 220 V
GFI	GROUND FAULT INTERRUPT RECEPTACLE
WP	WEATHER PROOF GFCI DUPLEX RECEPTACLE
	220V HARDWIRE DEDICATED SERVICE
	A/C DISCONNECT
	CEILING MOUNTED INCANDESCENT LIGHT
	FLUSH MOUNTED 'LED'
	WALL MOUNTED INCANDESCENT LIGHT
	5-BLADE, 3 SPEED REVERSIBLE FAN w/ LIGHT
	2' STRIP FLORESCENT
	4' STRIP FLORESCENT
	SINGLE POLE SWITCH
3	3-WAY SWITCH
	ELECTRICAL PANEL BOARD
	CEILING MOUNTED EXHAUST FAN
	SMOKE DETECTOR/CARBON MONOXIDE COMBO
T	THERMOSTAT
PB	PUSH BUTTON FOR DOOR BELL OR GARAGE DOOR OPENER
CHIME	DOOR CHIME

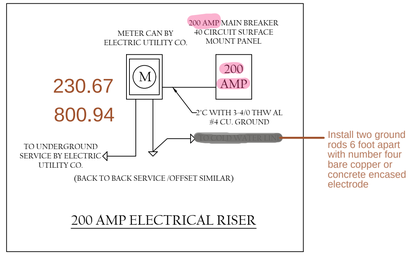

200 AMP ELECTRICAL RISER

NOTE: GARAGE RECEPTACLE OUTLETS MUST BE SERVED BY A SEPARATE BRANCH CIRCUIT THAT DOES NOT SUPPLY OTHER OUTLETS. AT LEAST ONE RECEPTACLE OUTLET IS REQUIRED FOR EACH CAR SPACE IN A GARAGE.

NOTE: LIGHTING TO BE 75% HIGH-EFFICIENCY per (FBC-EC R404)

CODE REFERENCE R315.1 - CARBON MONOXIDE PROTECTION

OPERATIONAL CARBON MONOXIDE ALARMS SHALL BE INSTALLED WITHIN 10 FEET OF EACH ROOM USED FOR SLEEPING PURPOSES.

REQUIREMENTS ARE ONE OF THE FOLLOWING:

1) A HARD-WIRED CARBON MONOXIDE ALARM
2) A BATTERY-POWERED CARBON MONOXIDE ALARM
3) A HARD-WIRED COMBINATION CARBON MONOXIDE AND SMOKE ALARM
4) A BATTERY-POWERED COMBINATION CARBON MONOXIDE AND SMOKE ALARM

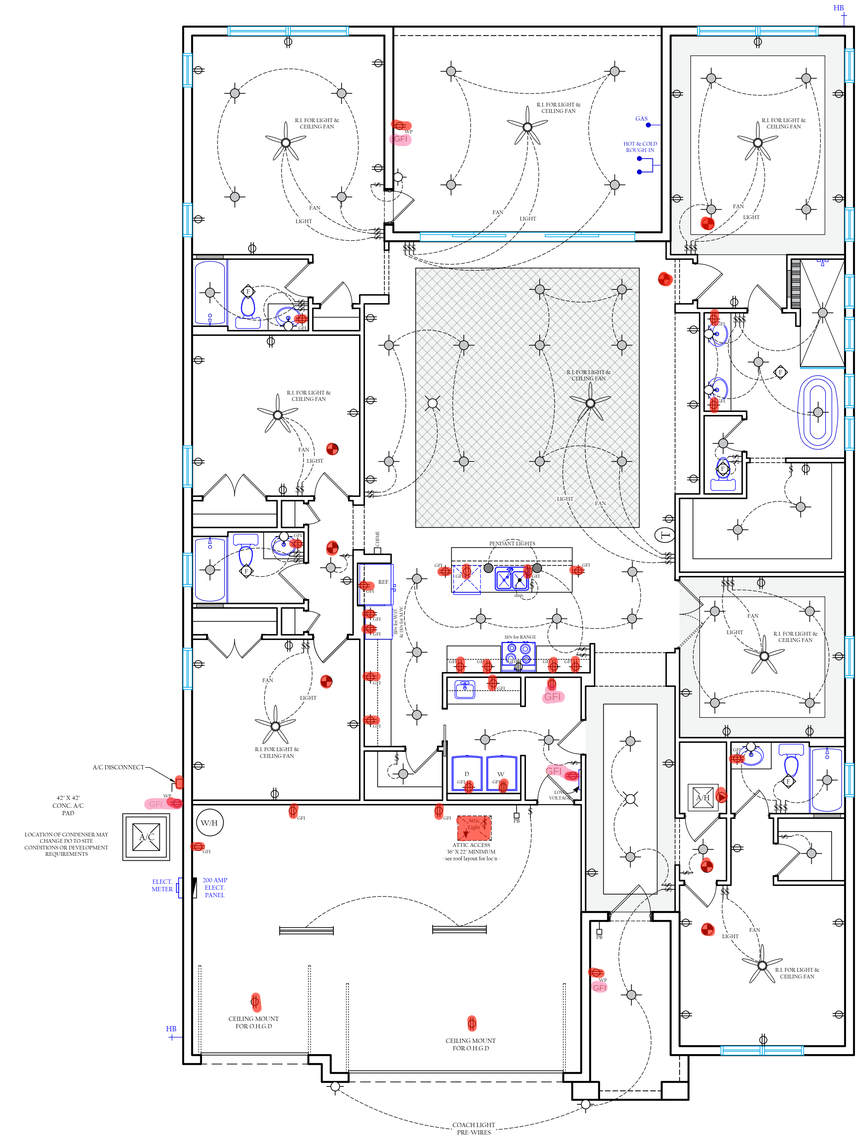

MAIN ELECTRICAL PLAN

TRADITIONAL ELEVATION 'A' SHOWN

- Waverly -
'2916'

Version 1.0

CARDEL HOMES

09/05/2025

JRW

Scale: 3/16" = 1'-0"

Lot 166 of Southwind

Project Address:
503 Spring Harvest Dr,
Plant City, FL. 33566

Sheet 5 of 9

E1.1

WALL LEGEND

8" C.M.U. WALL
(see plan for height)

INTERIOR FRAME BEARING WALL

INTERIOR FRAME WALL (4" typ.)

- □ — REPRESENTS (1) #5 BAR VERTICAL CONT. IN CONC. FILLED CELL. (STEMWALL) note: bend into upper slab 24" or bond beam
- ■ — REPRESENTS (1) #5 BAR VERTICAL CONT. IN CONC. FILLED CELL.
- ▣ — REPRESENTS (2) #5 BAR VERTICAL CONT. IN CONC. FILLED CELL.

PRE-CAST AND PRE-STRESSED CONCRETE COMPONENTS SHALL BE USED AND INSTALLED PER MANUFACTURER'S SPECIFICATIONS. PRE-CAST LINTELS HAVE BEEN REVIEWED AND PLACED BASED ON DESIGN ALLOWABLE LOAD INFORMATION PROVIDED BY CAST CRETE. THEREFORE, CAST CRETE IS A DELEGATED ENGINEER FOR THIS PROJECT. ENGINEER OF RECORD MUST APPROVE IN WRITING ANY CHANGE IN LINTEL MANUFACTURER. ALL OTHER STRUCTURAL PRE-CAST COMPONENT MANUFACTURERS MUST SUBMIT DESIGN LOAD INFORMATION TO ENGINEER OF RECORD FOR APPROVAL. ENGINEER OF RECORD RESERVES THE RIGHT TO MAKE ANY CHANGES AFTER SUCH INFORMATION HAS BEEN PROVIDED FOR REVIEW. CONTRACTOR, AS PROJECT COORDINATOR, SHALL BE RESPONSIBLE FOR INSURING INFORMATION REQUESTED ABOVE HAS BEEN SUBMITTED TO ENGINEER OF RECORD IN A TIMELY MANNER WHEN AVAILABLE.

ALL PLUMBING, ELECTRICAL, AND MECHANICAL ROUGH-INS MUST BE COMPLETE, INSPECTED, AND APPROVED BEFORE REQUESTING THE FRAMING INSPECTION.

ALL EXTERIOR WALLS TO BE CONSIDERED SHEAR RESISTING COMPONENTS

NOTE: TERMITE TREATMENT FOR THIS PROJECT IS TO BE BORA-CARE FOLLOWING MANUFACTURER SPECS.

NOTE: PLAN LOCATED CONTROL JOINTS ARE RECOMMENDED LOCATIONS BY THE ENGINEER, BUT ARE NOT REQUIRED TO BE INSTALLED.

NOTE: REFER TO SHEETS S1, S2, S3,S6 AND N1 FOR STANDARD DETAILS AND NOTES.

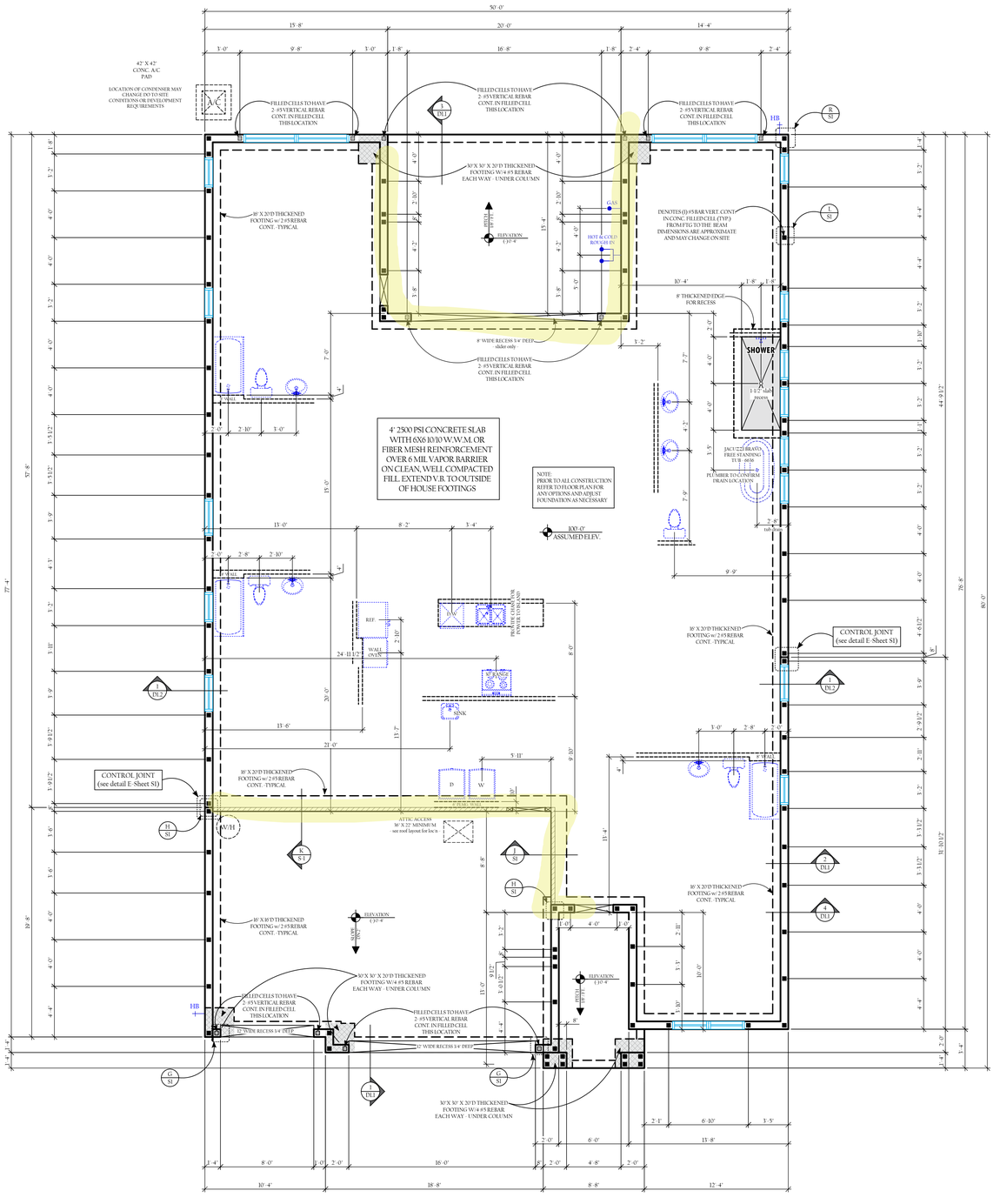

FOUNDATION PLAN

MAIN FLOOR BLOCK HEIGHT - 9' -4" a.f.f.

- Waverly -
'2916'

Version 1.0

CARDEL HOMES

JRW

08/05/2025

Scale: 3/16" = 1'-0"

I HEREBY CERTIFY THAT I HAVE REVIEWED THE ATTACHED DESIGNS AND THAT THEY ARE IN COMPLIANCE WITH SECTION R 301.OF THE FLORIDA BUILDING CODE, 7th EDITION

SEALED FOR STRUCTURE ONLY

Asbed A. Avetikian, P.E. - FL REG # 86623	
Andrew J. Meisheid, P.E. - FL REG # 83217	

Vortex Engineering, LLC.
7001 Temple Terrace Highway
Tampa, FL 33637
Ph# 1-877-6VORTEX (686-7839)
COA# 28035

Lot 166 of Southwind

Project Address:
503 Spring Harvest Dr,
Plant City, FL. 33566

Sheet 6 of 9

F1.1

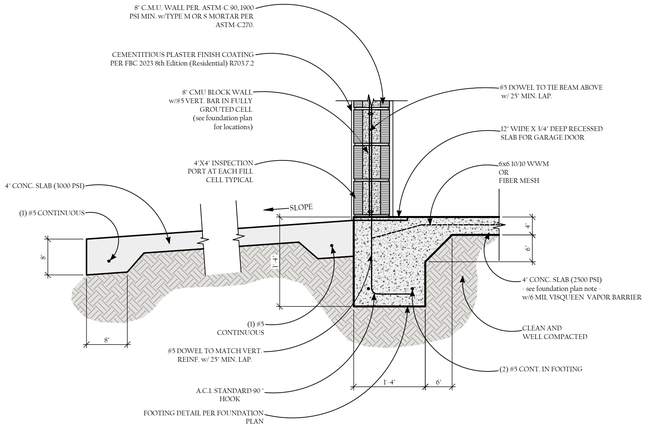

NOTE: ALL FOOTING REBAR SHALL HAVE MINIMUM 3" CONCRETE COVER.

1 TYPICAL GARAGE FOOTING AND DRIVEWAY APRON DETAIL

FOOTINGS TO BE PLACED NOT LESS THAN 12 INCHES BELOW THE FINISHED GRADE OF THE GROUND SURFACE FBC R403.1.4

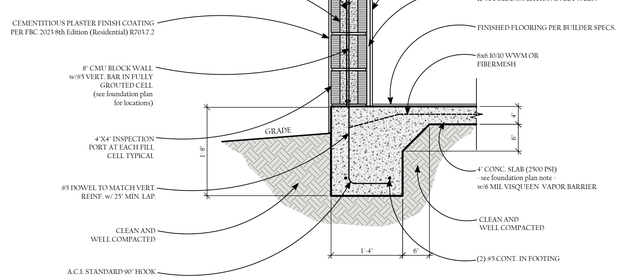

NOTE: ALL FOOTING REBAR SHALL HAVE MINIMUM 3" CONCRETE COVER.

2 TYPICAL - 1 STORY MONOLITHIC THICKENED EDGE SLAB DETAIL

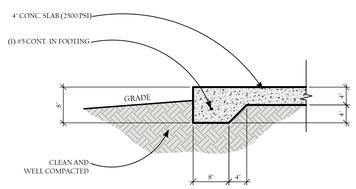

3 TYPICAL EDGE SECTION AT SLAB

SHINGLE / TILE ROOF - SEE ELEVATION PAGES FOR MORE INFO. FASTENING TO BE AS PER MANUFACTURER'S SPECIFICATIONS. CONTRACTOR TO PROVIDE MANUFACTURER DOCUMENTATION TO INSPECTOR @ TIME OF INSPECTION. IF SHINGLE IS USED, UNDERLAYMENT TO COMPLY WITH FBC R 905.1.1.

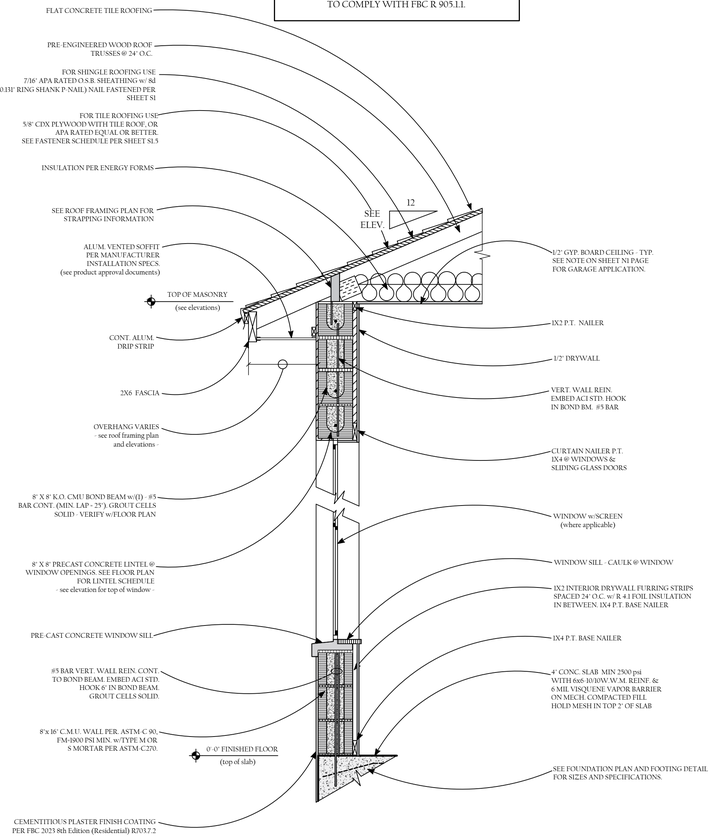

4 TYPICAL - 1 STORY EXTERIOR MASONRY WALL SECTION

- Waverly -
'2916'

Version 1.0

CARDEL HOMES

09.05.2025

JRW

Scale: 3/16" = 1'-0"

I HEREBY CERTIFY THAT I HAVE REVIEWED THE ATTACHED DOCUMENTS AND THEY ARE IN COMPLIANCE WITH SECTION R 301 OF THE FLORIDA BUILDING CODE, 7th EDITION

SEALED FOR STRUCTURE ONLY

Asbed A. Avedikian, P.E. - FL REG # 86623	
Andrew J. Metsfield, P.E. - FL REG # 87217	

Vortex Engineering, LLC.
7001 Temple Terrace Highway
Tampa, FL 33637
Ph# 1 877-6VORTEX (6867-8839)
COA# 28035

Lot 166 of Southwind

Project Address:
503 Spring Harvest Dr,
Plant City, FL. 33566

Sheet 7 of 9

D1.1

NOTE: 1"X P.T. WINDOW/DOOR BUCKS MAY BE USED IN LIEU OF THIS SPEC. WITH FLORIDA PRODUCT APPROVED DOCUMENTATION. WINDOW/DOOR BUCK AND FASTENER SPECIFICATIONS SHOWN ON FLORIDA PRODUCT APPROVAL DOCUMENTS, OVERRIDE THE SPECS, SHOWN HERE.

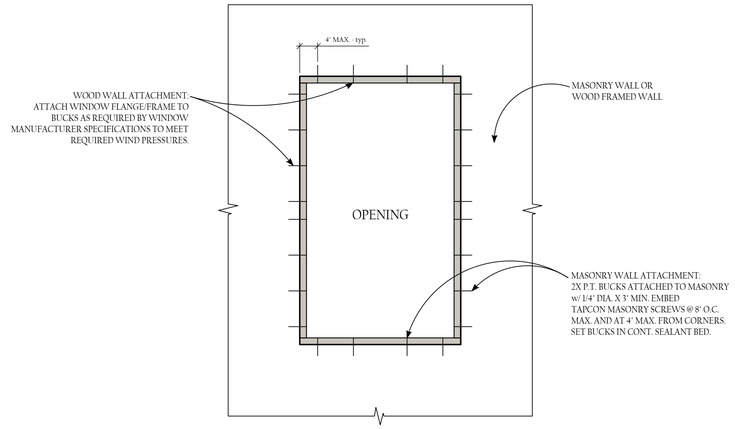

1 WINDOW/DOOR BUCK ATTACHMENT DETAIL

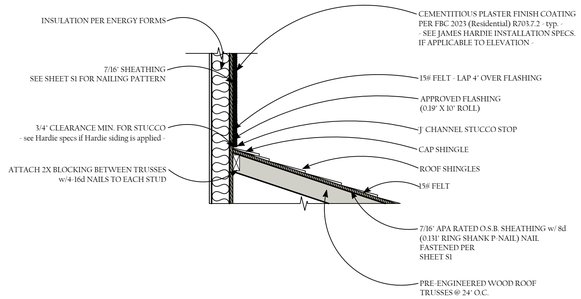

ROOF TO WALL FLASING DETAIL

INTERIOR ROUGH AND FINISH OPENINGS FOR DOORS

INTERIOR PRE-HUNG DOOR SIZES	ROUGH OPENINGS	6'-8" HEIGHT	8'-0" HEIGHT
SIZE	20"	83"	99"
1/6	26"	83"	99"
2/0	30"	83"	99"
2/4	32"	83"	99"
2/6	34"	83"	99"
2/8	38"	83"	99"
3/0			

NOTE: DOUBLE DOORS ADD 3" TO WIDTH (EXAMPLE: 4/0 SHOULD BE 51" ROUGH OPENING)

MIRROR BI-PASS DOOR SIZES	ROUGH OPENINGS	FINISHED OPENING
SIZE		
	48" X 81"	47" X 80-1/2"
4/0	60" X 81"	59" X 80-1/2"
5/0	72" X 81"	71" X 80-1/2"
6/0		

WOOD BI-PASS DOOR SIZES		
SIZE	48" X 83"	47" X 82-1/2"
4/0	60" X 83"	59" X 82-1/2"
5/0	72" X 83"	71" X 82-1/2"
6/0		

WOOD BI-FOLD DOOR SIZES		
SIZE	19-1/2" X 82"	18" X 81-1/2"
1/6	25-1/2" X 82"	24" X 81-1/2"
2/0	29-1/2" X 82"	28" X 81-1/2"
2/4	37-1/2" X 82"	36" X 81-1/2"
3/0	49-1/2" X 82"	48" X 81-1/2"
4/0	61-1/2" X 82"	60" X 81-1/2"
5/0		

METAL BI-FOLD DOOR SIZES		
SIZE	37-1/2" X 82"	36" X 81-1/2"
3/0	49-1/2" X 82"	48" X 81-1/2"
4/0	61-1/2" X 82"	60" X 81-1/2"
5/0	73-1/2" X 82"	72" X 81-1/2"
6/0		

NOTE: CASED OPENINGS SHOULD BE TREATED LIKE A PRE-HUNG + 2" TO THE WIDTH + 3" TO THE HEIGHT

POCKET DOOR FRAMES

DOOR	ROUGH OPENING	DOOR	ROUGH OPENING
2/0 X 6/8	50" X 84-1/2"	2/0 X 8/0	50" X 100-1/2"
2/4 X 6/8	58" X 84-1/2"	2/4 X 8/0	58" X 100-1/2"
2/6 X 6/8	62" X 84-1/2"	2/6 X 8/0	62" X 100-1/2"
2/8 X 6/8	66" X 84-1/2"	2/8 X 8/0	66" X 100-1/2"
3/0 X 6/8	74" X 84-1/2"	3/0 X 8/0	74" X 100-1/2"
4/0 X 6/8	99" X 84-1/2"	4/0 X 8/0	99" X 100-1/2"
5/0 X 6/8	123" X 84-1/2"	5/0 X 8/0	123" X 100-1/2"
5/4 X 6/8	131" X 84-1/2"	5/4 X 8/0	131" X 100-1/2"
6/0 X 6/8	147" X 84-1/2"	6/0 X 8/0	147" X 100-1/2"

REPAIR DETAIL

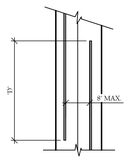

NON-CONTACT LAP SPLICE

THIS DETAIL TO BE USED IF BAR FROM TIE BM. IS IN CELL ADJACENT TO BAR FROM FOOTING. POUR CELL FROM TIE BM. SOLID. CELL CONTAINING VERTICAL FROM FOOTING MUST BE FILLED TO A HEIGHT 6" ABOVE HIGHEST POINT OF LAP SPLICE

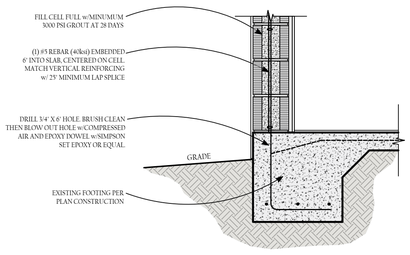

REPAIR DETAIL - RETROFIT FILLED CELL
(in monolithic construction)

REPAIR NOTE:
IN AREAS WHERE BLOCK WALL OVERHANGS POURED SLAB MORE THAN 3/4" BUT NOT MORE THAN 1 3/4", WALL MAY BE POURED SOLID FOR IT'S ENTIRE LENGTH USING A CONTINUOUS POUR FROM SLAB TO TIE-BEAM TO MEET STRUCTURAL REQUIREMENTS. OVERHANGS OF LESS THAN 3/4" ARE ACCEPTABLE BY CODE.

MISSED STRAP REPAIR NOTE:
IN AREAS WHERE EMBEDED TRUSS ANCHORS HAVE BEEN MISSED, DAMAGED, OR RENDERED UNUSABLE; A SIMPSON HTSM 16 STRAP MAY BE USED IN ITS PLACE. THIS STRAP WILL BE SECURED WITH FOUR (4) 1/4" X 2 1/4" TITEN SCREWS INTO THE BOND BEAM AND EIGHT (8) 10d NAILS INTO THE TRUSS. THIS CONFIGURATION WILL GIVE A MAX. ALLOWABLE UPLIFT RESISTANCE OF 1175 lbs.

- Waverly -
'2916'
Version 1.0

CARDEL HOMES

09/05/2025
JRW

Scale: 3/16" = 1'-0"

I HEREBY CERTIFY THAT I HAVE REVIEWED THE ATTACHED DESIGN, AND FIND IT TO BE IN COMPLIANCE WITH SECTION R 301 OF THE FLORIDA RESIDENTIAL CODE, 7th EDITION

SEALED FOR STRUCTURE ONLY

Ashel A. Avelikian, P.E. - FL REG # 86623
Andrew J. Metsheil, P.E. - FL REG # 83217

Vortex Engineering, LLC.
7001 Temple Terrace Highway
Tampa, FL 33637
Ph# 1-877-6VORTEX (686-7839)
COA# 28035

Lot 166 of Southwind

Project Address:
503 Spring Harvest Dr,
Plant City, FL. 33566

Sheet 8 of 9

D1.2

CODE REFERENCE R703.4 - FLASHING

APPROVED CORROSION-RESISTANT FLASHING SHALL BE APPLIED SHINGLE-FASHION IN A MANNER TO PREVENT ENTRY OF WATER INTO THE WALL CAVITY OR PENETRATION OF WATER TO THE BUILDING STRUCTURAL FRAMING COMPONENTS. SELF-ADHERED MEMBRANES USED AS FLASHING SHALL COMPLY WITH AAMA 711. ALL EXTERIOR FENESTRATION PRODUCTS SHALL BE SEALED AT THE JUNCTURE WITH THE BUILDING WALL WITH A SEALANT COMPLYING WITH AAMA 800 OR ASTM C920 CLASS 25
GRADE NS OR GREATER FOR PROPER JOINT EXPANSION AND CONTRACTION. ASTM C1281, AAMA812, OR OTHER APPROVED STANDARD AS APPROPRIATE FOR THE TYPE OF SEALANT. FLUID-APPLIED MEMBRANES USED AS FLASHING IN EXTERIOR WALLS SHALL COMPLY WITH AAMA 714. THE FLASHING SHALL EXTEND TO THE SURFACE OF THE EXTERIOR WALL FINISH.

CODE REFERENCE R703.2 - WATER-RESISTIVE BARRIERS

ONE LAYER OF No. 15 ASPHALT FELT, FREE FROM HOLES AND BREAKS, COMPLYING WITH ASTM D226 FOR TYPE I FELT OR OTHER APPROVED WATER-RESISTIVE BARRIER SHALL BE APPLIED OVER STUDS OR SHEATHING OF EXTERIOR WALLS. No. 15 ASPHALT FELT SHALL BE APPLIED HORIZONTALLY, WITH THE UPPER LAYER LAPPED OVER THE LOWER LAYER NOT LESS THAN 2 INCHES (51mm). WHERE JOINTS OCCUR, FELT SHALL BE LAPPED NOT LESS THAT 6 INCHES (152mm). OTHER APPROVED MATERIALS SHALL BE INSTALLED IN ACCORDANCE WITH THE WATER-RESISTIVE BARRIER MANUFACTURER'S INSTALLATION INSTRUCTIONS. THE No 15 ASPHALT FELT OR OTHER APPROVED WATER-RESISTIVE BARRIER MATERIAL SHALL BE CONTINUOUS TO THE TOP OF WALLS AND TERMINATED AT PENETRATIONS AND BUILDING APPENDAGES IN A MANNER TO MEET THE REQUIREMENTS OF THE EXTERIOR WALL ENVELOPE AS DESCRIBED IN SECTION R703.1. THE WATER-RESISTIVE BARRIER IS NOT REQUIRED FOR DETACHED ACCESSORY BUILDINGS.

CODE REFERENCE R703.7 - EXTERIOR PLASTER

INSTALLATION OF THESE MATERIALS SHALL BE IN COMPLIANCE
WITH ASTM C 926 AND ASTM C 1063 AND THE PROVISIONS PROVIDED
BY THE F.B.C. 2023 (8th Edition)

CODE REFERENCE R703.7.2 - PLASTER

PLASTERING WITH PORTLAND CEMENT PLASTER SHALL NOT BE LESS THAN THREE COAST WHERE APPLIED OVER METAL LATH OR WIRE LATH AND SHALL NOT BE LESS THAN TWO COATS WHERE APPLIED OVER MASONRY, CONCRETE, PRESSURE-PRESERVATIVE-TREATED WOOD OR DECAY-RESISTANT WOOD AS SPECIFIED IN SECTION R317.1 OR GYPSUM BACKING. IF THE PLASTER SURFACE IS COMPLETELY COVERED BY VENEER OR OTHER FACING MATERIAL OR IS COMPLETELY CONCEALED, PLASTER APPLICATION NEED BE ONLY TWO COATS, PROVIDED THE TOTAL THICKNESS IS AS SET FORTH IN TABLE R 702.1(1) PER FBC 2023 (8th edition).

OVER EXTERIOR WIRE LATH THICKNESS - 7/8"
OVER MASONRY WALLS (EXTERIOR) - 1/2"

CODE REFERENCE R703.7.3 - WATER-RESISTIVE BARRIERS

WATER-RESISTIVE BARRIERS SHALL BE INSTALLED AS REQUIRED BY R703.2 AND WHERE APPLIED OVER WOOD-BASED SHEATHING, SHALL INCLUDE A WATER-RESISTIVE VAPOR-PERMEABLE BARRIER WITH A PERFORMANCE AT LEAST EQUIVALENT TO TWO LAYERS OF GRADE D PAPER. THE INDIVIDUAL LAYERS SHALL BE INSTALLED INDEPENDENTLY SUCH THAT EACH LAYER PROVIDES A SEPARATE CONTINUOUS PLANE AND ANY FLASHING (INSTALLED IN ACCORDANCE WITH SECTION R 703.4) INTENDED TO DRAIN TO THE WATER-RESISTIVE BARRIER IS DIRECTED BETWEEN THE LAYERS.

CODE REFERENCE R703.8.5 - FLASHING

FLASHING SHALL BE LOCATED BENEATH THE FIRST COURSE OF MASONRY ABOVE FINISHED GROUND LEVEL ABOVE THE FOUNDATION WALL OR SLAB AND AT OTHER POINTS OF SUPPORT, INCLUDING STRUCTURAL FLOORS, SHELF ANGLES AND LINTELS WHEN MASONRY VENEERS ARE DESIGNED IN ACCORDANCE WITH SECTION R 703.8.

CODE REFERENCE R703.12 - ADHERED MASONRY VENNER INSTALLATION

ADHERED MASONRY VENEER SHALL COMPLY WITH THE REQUIREMENTS OF SECTION R 703.7.3 AND THE REQUIREMENTS IN SECTIONS 12.1 AND 12.3 OF TMS 402/ACI 530/ASCE 5. ADHERED MASONRY VENEER SHALL BE INSTALLED IN ACCORDANCE WITH SECTION R 703.7.1, ARTICLE 3.3C OF TMS 602/ACI 530.1/ASCE 6 OR THE MANUFACTURER'S INSTRUCTIONS.

R703.12.1 - CLEARANCES

ON EXTERIOR STUD WALLS, ADHERED MASONRY VENNER SHALL BE INSTALLED:

1. MINIMUM OF 4" ABOVE THE EARTH;

2. MINIMUM OF 2" ABOVE PAVED AREA; OR

3. MINIMUM OF 1/2" ABOVE EXTERIOR WALKING SURFACES WHICH ARE SUPPORTED BY THE SAME FOUNDATION THAT SUPPORTS THE EXTERIOR WALL.

CODE REFERENCE R318.1 - TERMITE PROTECTION

TERMITE PROTECTION SHALL BE PROVIDED BY REGISTERED TERMITICIDES, INCLUDING SOIL APPLIED PESTICIDES, BAITING SYSTEMS, AND PESTICIDES APPLIED TO WOOD, OR OTHER APPROVED METHODS OF TERMITE PROTECTION LABELED FOR USE AS A PREVENTATIVE TREATMENT TO NEW CONSTRUCTION. SEE SECTION 202 OF REGISTERED TERMICIDE. UPON COMPLETION OF THE APPLICATION OF THE TERMITE PROTECTION TREATMENT, A CERTIFICATE OF COMPLIANCE SHALL BE ISSUED TO THE BUILDING DEPARTMENT BY THE LICENSED PEST CONTROL COMPANY THAT CONTAINS THE FOLLOWING STATEMENT: 'THE BUILDING HAS RECEIVED A COMPLETE TREATMENT FOR THE PREVENTION OF SUBTERRANEAN TERMITES. TREATMENT IS IN ACCORDANCE WITH RULES AND LAWS ESTABLISHED BY THE FLORIDA
EPARTMENT OF AGRICULTURE AND CONSUMER SERVICES."

CODE REFERENCE R302.5.1 - OPENING PROTECTION

OPENINGS FROM A PRIVATE GARAGE DIRECTLY INTO A ROOM USED FOR SLEEPING PURPOSES SHALL NOT BE PERMITTED. OTHER OPENINGS BETWEEN THE GARAGE AND RESIDENCE SHALL BE EQUIPPED WITH SOLID WOOD DOORS NOT LESS THAN 1-3/8" IN THICKNESS, SOLID OR HONEYCOMB-CORE STEEL DOORS NOT LESS THAN 1-3/8" THICK, OR 20 MINUTE FIRE-RATED DOORS.

CODE REFERENCE R302.5.2 - DUCT PENETRATION

DUCTS IN THE GARAGE AND DUCTS PENETRATING THE WALLS OR CEILINGS SEPARATING THE DWELLING FROM THE GARAGE SHALL BE CONSTRUCTED OF A MINIMUM No. 26 GAGE SHEET STEEL, 1" MINIMUM RIGID NON-METALLIC CLASS 0 OR CLASS 1 DUCT BOARD, OR OTHER APPROVED MATERIAL AND SHALL HAVE NO OPENINGS INTO THE GARAGE.

CODE REFERENCE R302.6 - DWELLING/GARAGE FIRE SEPARATION

THE GARAGE SHALL BE SEPARATED AS REQUIRED/NOTED BELOW:

- FROM RESIDENCE TO ATTIC: NOT LESS THAN 1/2" GYPSUM BOARD OR EQUIVALENT APPLIED TO THE GARAGE SIDE
- FROM ALL HABITABLE ROOMS ABOVE GARAGE: NOT LESS THAN 5/8" TYPE X GYPSUM BOARD OR EQUIVALENT
- STRUCTURES SUPPORTING FLOOR/CEILING ASSEMBLIES USED FOR SEPARATION: NOT LESS THAN 1/2" GYPSUM BOARD OR EQUIVALENT

CODE REFERENCE R312.2.1 - WINDOW SILLS

IN DWELLING UNITS, WHERE THE TOP OF THE SILL OF AN OPERABLE WINDOW OPENING IS LOCATED LESS THAN 24 INCHES ABOVE THE FINISHED FLOOR AND GREATER THAN 72 INCHES ABOVE THE FINISHED GRADE OR OTHER SURFACE BELOW ON THE EXTERIOR OF THE BUILDING, THE OPERABLE WINDOW SHALL COMPLY WITH ONE OF THE FOLLOWING:

EXCEPTIONS:

1. OPERABLE WINDOWS WITH OPENINGS THAT WILL NOT ALLOW A 4 INCH DIAMETER SPHERE TO PASS THROUGH THE OPENING WHERE THE OPENING IS IN ITS LARGEST OPENED POSITION.

2. OPERABLE WINDOWS THAT ARE PROVIDED WITH WINDOW FALL PREVENTION DEVICES THAT COMPLY WITH ASTM F2090.

3. OPERABLE WINDOWS THAT ARE PROVIDED WITH WINDOW OPENING CONTROL DEVICES THAT COMPLY WITH SECTION R312.2.2

CODE REFERENCE R312.2.2 - WINDOW OPENING CONTROL DEVICES

WINDOW OPENING CONTROL DEVICES SHALL COMPLY WITH ASTM F2090. THE WINDOW OPENING CONTROL DEVICE, AFTER OPERATION TO RELEASE THE CONTROL DEVICE ALLOWING THE WINDOW TO FULLY OPEN, SHALL NOT REDUCE THE NET CLEAR OPENING AREA OF THE WINDOW UNIT TO LESS THAN THE AREA REQUIRED BY SECTION R310.2.1.

CODE REFERENCE R905.1 - ROOF COVERING APPLICATION

ROOF COVERINGS SHALL BE APPLIED IN ACCORDANCE WITH THE APPLICABLE PROVISIONS OF THIS SECTION AND THE MANUFACTURER'S INSTALLATION INSTRUCTIONS. UNLESS OTHERWISE SPECIFIED IN THIS SECTION, ROOF COVERINGS SHALL BE INSTALLED TO RESIST THE COMPONENT AND CLADDING LOADS SPECIFIED IN TABLE R 301.2(2), ADJUSTED FOR HEIGHT AND EXPOSURE IN ACCORDANCE WITH TABLE R 301.2(3)

CODE REFERENCE R905.1.1 - UNDERLAYMENT

UNDERLAYMENT FOR ROOF SLOPES 2:12 AND GREATER SHALL CONFORM TO THE APPLICABLE STANDARDS LISTED IN THIS CHAPTER. UNDERLAYMENT MATERIALS REQUIRED TO COMPLY WITH ASTM D226, D1970, D4869, AND D6757 SHALL BEAR A LABEL INDICATING COMPLIANCE TO THE STANDARD DESIGNATION AND, IF APPLICABLE, TYPE CLASSIFICATION INDICATED. UNDERLAYMENT FOR ROOF SLOPES 2:12 AND GREATER SHALL BE APPLIED AND ATTACHED IN ACCORDANCE WITH SECTION R 905.1.1.1, R905.1.1.2, OR R905.1.1.3, AS APPLICABLE.

UNDERLAYMENT - TYPES, APPLICATION, AND ATTACHMENT:

UNDERLAYMENT FOR ASPHALT SHINGLES, METAL ROOF SHINGLES, MINERAL SURFACED ROLL ROOFING, SLATE AND SLATE-TYPE SHINGLES, AND METAL ROOF PANELS SHALL COMPLY WITH ONE OF THE FOLLOWING METHODS:

1. THE ENTIRE ROOF DECK SHALL BE COVERED WITH AN APPROVED SELF-ADHERING POLYMER-MODIFIED BITUMEN UNDERLAYMENT COMPLYING WITH ASTM D1970 INSTALLED IN ACCORDANCE WITH BOTH THE UNDERLAYMENT MANUFACTURE'S AND ROOF COVERING MANUFACTURE'S INSTALLATION INSTRUCTIONS FOR DECK MATERIAL, ROOF VENTILATION CONFIGURATION AND CLIMATE EXPOSURE FOR THE ROOF COVERING TO BE INSTALLED.

2. A MINIMUM 4 INCH WIDE (102mm) STRIP OF SELF-ADHERING POLYMER-MODIFIED BITUMEN MEMBRANE COMPLYING WITH ASTM D1970, INSTALLED IN ACCORDANCE WITH THE MANUFACTURER'S INSTRUCTIONS FOR THE DECK MATERIAL, SHALL BE APPLIED OVER ALL JOINTS IN THE ROOF DECKING. AN APPROVED UNDERLAYMENT IN ACCORDANCE WITH TABLE R905.1.1.1 FOR THE APPLICABLE ROOF COVERING SHALL BE APPLIED OVER THE ENTIRE ROOF OVER THE 4-INCH WIDE (102mm) MEMBRANE STRIPS.

3. A MINIMUM 3-3/4-INCH WIDE (96 mm) STRIP OF SELF-ADHERING FLEXIBLE FLASHING TAPE COMPLYING WITH AMMA 711, LEVEL 3 (FOR EXPOSURE UP TO 176oF (80oC), INSTALLED IN ACCORDANCE WITH THE MANUFACTURER'S INSTRUCTIONS FOR THE DECK MATERIAL, SHALL BE APPLIED OVER ALL JOINTS IN THE ROOF DECKING. AN APPROVED UNDERLAYMENT IN ACCORDANCE WITH TABLE R905.1.1.1 FOR THE APPLICABLE ROOF COVERING SHALL BE APPLIED OVER THE ENTIRE ROOF OVER THE SELF-ADHERING STRIPS.

4. TWO LAYERS OF ASTM D226 TYPE II OR ASTM D4869 TYPE III OR TYPE IV UNDERLAYMENT SHALL BE INSTALLED AS FOLLOWS: APPLY A 19-INCH (483mm) STRIP OF UNDERLAYMENT FELT PARALLEL TO AND STARTING AT THE EAVES, FASTENED SUFFICIENTLY TO HOLD IN PLACE. STARTING AT THE EAVE, APPLY 36-INCH WIDE (914mm) SHEETS OF UNDERLAYMENT, OVERLAPPING SUCCESSIVE SHEETS 19-INCHES (483mm). END LAPS SHALL BE 6-INCHES AND SHALL BE OFFSET BY 6 FEET. THE UNDERLAYMENT SHALL BE ATTACHED TO A NAILABLE DECK WITH CORROSION-RESISTANT FASTENERS WITH ONE ROW CENTERED IN THE FIELD OF THE SHEET WITH A MAXIMUM FASTENER SPACING OF 12-INCHES (305mm) ON CENTER, AND ONE ROW AT THE END AND SIDE LAPS FASTENED 6-INCHES (152mm) ON CENTER. UNDERLAYMENT SHALL BE ATTACHED USING ANNULAR RING OR DEFORMED-SHANK NAILS WITH METAL OR PLASTIC CAPS WITH A NOMINAL CAP DIAMETER OF NOT LESS THAN 1-INCH. METAL CAPS ARE REQUIRED WHERE THE ULTIMATE DESIGN WIND SPEED EQUALS OR EXCEEDS 170 MPH. METAL CAPS SHALL HAVE A THICKNESS OF NOT LESS THAN 32-GAUGE SHEET METAL. POWER-DRIVEN METAL CAPS SHALL HAVE A MINIMUM THICKNESS OF 0.010 INCH. MINIMUM THICKNESS OF THE OUTSIDE EDGE OF PLASTIC CAPS SHALL BE 0.035 INCH. THE CAP NAIL SHANK SHALL NOT BE LESS THAN 0.083 INCH FOR RING SHANK CAP NAILS. CAP NAIL SHANK SHALL HAVE A LENGTH SUFFICIENT TO PENETRATE THROUGH THE ROOF SHEATHING OR NOT LESS THAT 3/4 INCH INTO THE ROOF SHEATHING.

FBC 2023 - 8th Edition - FLORIDA PRODUCT APPROVAL LIST

Approved Application #'s	Product Manufacturer's	Product Category's	Product Subcategory's	Product Description	Approved Date	Expiration Date
FL 15332.6-R7	MI Windows and Doors	Exterior Doors	Sliding Exterior Door Assembly	series 420 - 8080 Slider (non-impact)	08/19/2023	07/01/2030
FL 15332.9-R7	MI Windows and Doors	Exterior Doors	Sliding Exterior Door Assembly	series 430 - 12080 Slider (non-impact)	08/19/2023	07/01/2030
FL 15332.11-R7	MI Windows and Doors	Exterior Doors	Sliding Exterior Door Assembly	series 440 - 16080 Slider (non-impact)	08/19/2023	07/01/2030
FL 18504.6-R6	MI Windows and Doors	Windows	Mullions	series M-2300	08/27/2023	07/01/2030
FL 41886.1-R9	MI Windows and Doors	Windows	Single Hung	series 3540 (non-impact) - 36" x 74" - fin	04/28/2025	04/12/2027
FL 41886.6-R9	MI Windows and Doors	Windows	Single Hung	series 3540 (non-impact) - 52"x 84" - fin	04/28/2025	05/26/2030
FL 41886.7-R9	MI Windows and Doors	Windows	Single Hung	series 3540 (non-impact) - 36"x 74" - finless	04/28/2025	08/28/2027
FL 41886.12-R9	MI Windows and Doors	Windows	Single Hung	series 3540 (non-impact) - 52" x 84" - finless	04/28/2025	05/26/2030
FL 41886.19-R9	MI Windows and Doors	Windows	Single Hung	series 3540 (non-impact) - 36" x 72" - fin - triple	04/28/2025	08/05/2026
FL 41886.21-R9	MI Windows and Doors	Windows	Single Hung	series 3540(non-impact)- 36" x 74" - finless -triple	04/28/2025	04/12/2027
FL 14634.1-R6	Ply Gem Windows	Exterior Doors	Sliding Exterior Door Assembly	series 4780 - 2 panel - non-impact	10/12/2023	12/31/2025
FL 14634.2-R6	Ply Gem Windows	Exterior Doors	Sliding Exterior Door Assembly	series 4780 - 3 panel - non-impact	10/12/2023	12/31/2025
FL 16103.1-R20	Ply Gem Windows	Windows	Single Hung	series 1500 - single hung - non-impact	12/03/2024	09/30/2026
FL 16104.1-R10	Ply Gem Windows	Windows	Fixed	series 1500 - fixed - non-impact	12/31/2023	04/30/2026
FL 16118.1-R5	Ply Gem Windows	Windows	Mullions	series 1500 - mullion	10/12/2023	12/31/2025
FL 20461.14-R9	Therma-Tru Corporation	Exterior Doors	Swinging Exterior Door Assembly	8' glazed non-impact (fiberglass)	10/17/2023	12/31/2026
FL 20461.20-R9	Therma-Tru Corporation	Exterior Doors	Swinging Exterior Door Assembly	8' opaque w/sidelites non-impact(fiberglass)	10/17/2023	12/31/2026
FL 20461.22-R9	Therma-Tru Corporation	Exterior Doors	Swinging Exterior Door Assembly	8' glazed w/sidelites non-impact (fiberglass)	10/17/2023	12/31/2026
FL 10456.3-R8	Simpson Strong-Tie Co.	Structural Components	Wood Connectors	Coiled Straps	11/29/2023	12/31/2026
FL 10456.7-R8	Simpson Strong-Tie Co.	Structural Components	Wood Connectors	H1, H10A, H2.5, etc.	11/29/2023	12/31/2026
FL 10456.12-R8	Simpson Strong-Tie Co.	Structural Components	Wood Connectors	HTS16, HTS20,HTS24, etc.	11/29/2023	12/31/2026
FL 10456.15-R8	Simpson Strong-Tie Co.	Structural Components	Wood Connectors	LSTA12, LSTA30, etc.	11/29/2023	12/31/2026
FL 10456.19-R8	Simpson Strong-Tie Co.	Structural Components	Wood Connectors	MGT	11/29/2023	12/31/2026
FL 10456.30-R8	Simpson Strong-Tie Co.	Structural Components	Wood Connectors	SPLSP2,SP4, SP6, SP8	11/29/2023	12/31/2026
FL 10456.31-R8	Simpson Strong-Tie Co.	Structural Components	Wood Connectors	SPH4, SPH6, SPH8	11/29/2023	12/31/2026
FL 10860.2-R8	Simpson Strong-Tie Co.	Structural Components	Wood Connectors	ABU44, ABU66, etc.	11/29/2023	12/31/2026
FL 11473.4-R6	Simpson Strong-Tie Co.	Structural Components	Wood Connectors	HETA12, HETA16, HETA20, etc.	12/12/2023	12/31/2026
FL 11496.4-R8	Simpson Strong-Tie Co.	Structural Components	Wood Connectors	HTT4, HTT5, etc.	10/01/2024	12/31/2027
FL 13975.2-R8	Simpson Strong-Tie Co.	Structural Components	Wood Connectors	SDW Screws	09/15/2024	12/31/2027
FL 13975.3-R8	Simpson Strong-Tie Co.	Structural Components	Wood Connectors	SDWC Screws	09/15/2024	12/31/2027
FL 15730.7-R9	Simpson Strong-Tie Co.	Structural Components	Anchors	SET-XP	12/01/2023	12/31/2026
FL 15730.9-R9	Simpson Strong-Tie Co.	Structural Components	Anchors	TITEN-HD	12/01/2023	12/31/2026
FL 158-R19	Cast-Crete USA, LLC	Structural Components	Concrete Lintels	Quality Precast	08/10/2024	07/29/2026
FL 1774-R7	Commercial Concrete Products, Inc.	Structural Components	Concrete Lintels	Quality Precast	02/13/2024	01/26/2034
FL 5444.2-R22	Certainteed, LLC (Roofing)	Roofing	Asphalt Shingles	Landmark Series	12/06/2024	02/05/2027
FL 15692.1-R6	Certainteed, LLC (Roofing)	Roofing	Underlayments	Polymer Series	12/12/2023	05/29/2028
FL 3792.2-R18	Lomanco	Roofing	Roof Louver/Vent	Series 770D -Off-Ridge Vents	08/21/2025	10/04/2030
FL 7849.2-R21	Westlake Royal Roofing	Roofing	Roofing Tiles	Barcelona 900 series	10/31/2024	12/31/2027
FL 7849.21-R21	Westlake Royal Roofing	Roofing	Roofing Tiles	Saxony 900 series	10/31/2024	12/31/2027
FL 14317.1-R17	Westlake Royal Roofing	Roofing	Underlayments	Self-Adhering modified bitumen	12/17/2024	12/31/2027
FL 33818.2-R5	Gulf Coast Supply & Manufacturing, LLC	Roofing	Metal Roofing	GulfLok and VersaLok series	08/13/2024	12/31/2029
FL 11175.1-R5	Southeastern Metal Manufacturing Co.	Roofing	Metal Roofing	Verti-Lok	12/12/2023	12/11/2026
FL 15218.2-R10	Tag & Stick, LLC	Roofing	Underlayments	Fiberglass reinforced modified butimen	01/02/2024	12/31/2030
FL 32502.1-R1	Ply Gem Siding Group	Panel Walls	Soffits	Mastic Soffits -Aluminum and Vinyl	10/18/2023	12/31/2026
FL 33178.1-R1	Ply Gem Siding Group	Panel Walls	Soffits	Georgia Pacific Soffits -Aluminum and Vinyl	10/18/2023	12/31/2026
FL 9174.4-R15	Wayne-Dalton James	Exterior Doors	Sectional Exterior Door Assemblies	9100 Series	10/22/2023	12/31/2035
FL 13192.2-R8	Hardie Building Products, Inc .	Panel Walls	Siding	HardiePlank Lap Siding	03/13/2024	03/31/2026
FL 13192.4-R8	James Hardie Building Products, Inc.	Panel Walls	Siding	Hardie Shingle Panel	03/13/2024	03/31/2026
FL 13223.2-R8	James Hardie Building Products, Inc.	Panel Walls	Siding	HardiePanel Siding	02/13/2024	12/31/2026
FL 12856.3-R8	Town and Country Industries	Panel Walls Shutters	Storm Panels	24ga. Steel	10/17/2023	12/31/2025

CODE REFERENCE R401.3 - DRAINAGE

SURFACE DRAINAGE SHALL BE DIVERTED TO A STORM SEWER CONVEYANCE OR OTHER APPROVED POINT OF COLLECTION SO AS TO NOT CREATE A HAZARD. LOTS SHALL BE GRADED TO DRAIN SURFACE WATER AWAY FROM THE FOUNDATION WALLS. THE GRADE SHALL FALL A MINIMUM OF 6 INCHES (152 MM) WITHIN THE FIRST 10 FEET (3048 MM).

EXCEPTION:

WHERE LOT LINES, WALLS, SLOPES OR OTHER PHYSICAL BARRIERS PROHIBIT 6 INCHES (152 MM) OF FALL WITHIN 10 FEET (3048 MM), THE FINAL GRADE SHALL SLOPE AWAY FROM THE FOUNDATION AT A MINIMUM SLOPE OF 5 PERCENT AND THE WATER SHALL BE DIRECTED TO DRAINS OR SWALES TO ENSURE DRAINAGE AWAY FROM THE STRUCTURE. SWALES SHALL BE SLOPED A MINIMUM OF 2 PERCENT WHEN LOCATED WITHIN 10 FEET (3048 MM) OF THE BUILDING FOUNDATION. IMPERVIOUS SURFACES WITHIN 10 FEET (3048 MM) OF THE BUILDING FOUNDATION SHALL BE SLOPED A MINIMUM OF 2 PERCENT AWAY FROM THE BUILDING.

MECHANICAL CODE REFERENCE:

THE WORKING SPACE FOR ACCESS TO APPLIANCES IS TO BE A LEVEL SPACE OF 30 INCHES DEEP BY 30 INCHES WIDE AND FREE AND CLEAR OF PIPING AND DUCTWORK FOR THE PURPOSE OF EASE OF MAINTENANCE OF THE EQUIPMENT. THIS GOES FOR ANY MECHANICAL APPLIANCE LOCATED IN A FLOOR SYSTEM OR ATTIC SPACE.

- Waverly -
'2916'
Version 1.0

CARDEL HOMES

JRW — 08/05/2025

Scale: 3/16" = 1'-0"

Lot 166 of Southwind

Project Address:
503 Spring Harvest Dr,
Plant City, FL. 33566

Sheet 9 of 9

D1.3

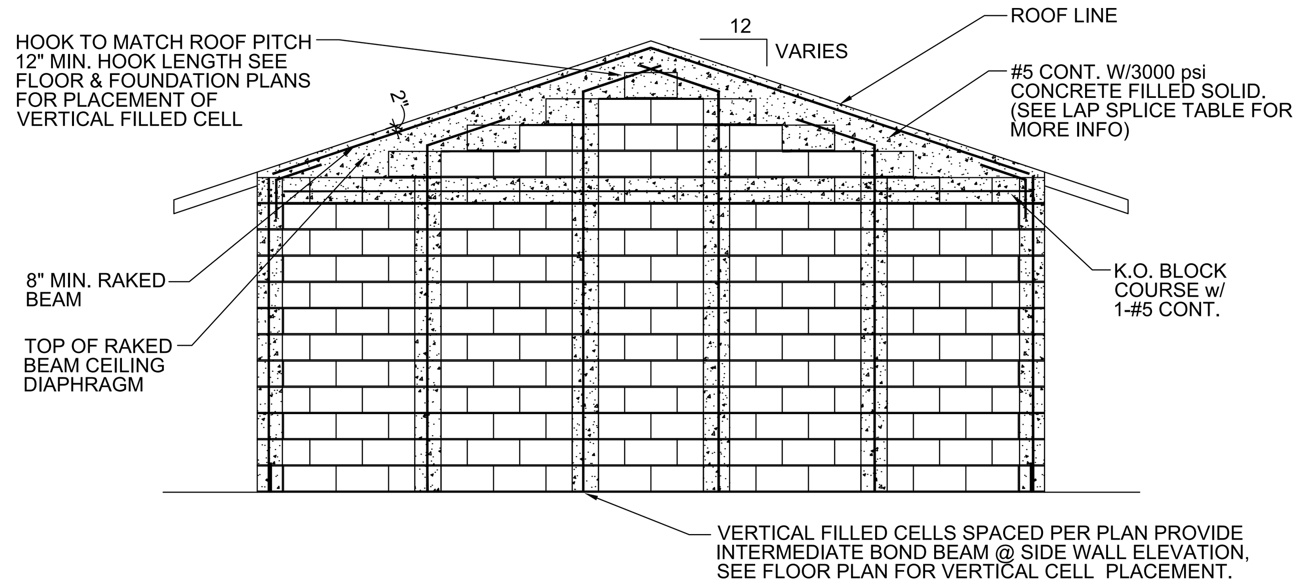

PRE-CAST & PRE-STRESSED CONCRETE COMPONENTS SHALL BE USED & INSTALLED PER MANUFACTURER'S SPECIFICATIONS. PRE-CAST LINTELS HAVE BEEN REVIEWED & PLACED BASED ON DESIGN ALLOWABLE LOAD INFORMATION PROVIDED BY CAST CRETE. THEREFORE, CAST CRETE IS A DELEGATED ENGINEER FOR THIS PROJECT. ENGINEER OF RECORD MUST APPROVE IN WRITING ANY CHANGE IN LINTEL MANUFACTURER. ALL OTHER STRUCTURAL PRE-CAST COMPONENT MANUFACTURERS MUST SUBMIT DESIGN LOAD INFORMATION TO ENGINEER OF RECORD FOR APPROVAL. ENGINEER OF RECORD RESERVES THE RIGHT TO MAKE ANY CHANGES AFTER SUCH INFORMATION HAS BEEN PROVIDED FOR REVIEW. CONTRACTOR, AS PROJECT COORDINATOR, SHALL BE RESPONSIBLE FOR INSURING INFORMATION REQUESTED ABOVE HAS BEEN SUBMITTED TO ENGINEER OF RECORD IN A TIMELY MANNER WHEN AVAILABLE.

A / S-1 Typical Raked Tie Beam
SCALE: NTS

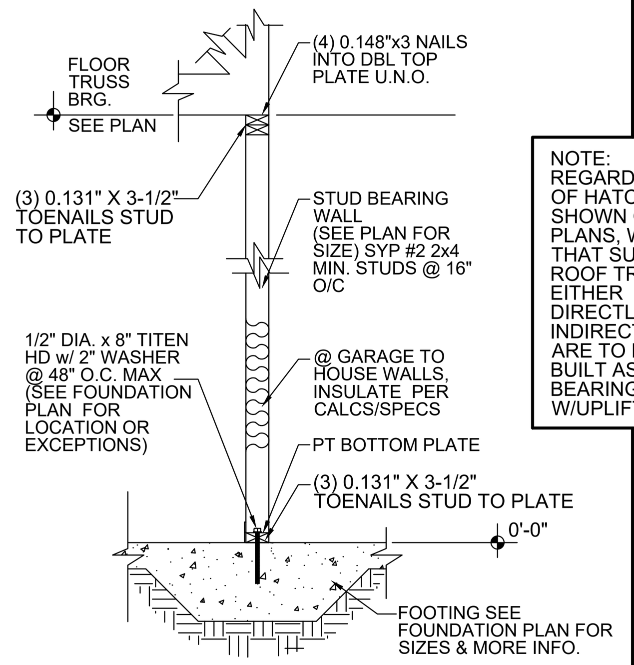

B / S-1 Typ. Load Brng. Interior Frame Wall Detail Without Uplift
SCALE: NTS

NOTE: REGARDLESS OF HATCHING SHOWN ON PLANS, WALLS THAT SUPPORT ROOF TRUSSES EITHER DIRECTLY OR INDIRECTLY ARE TO BE BUILT AS BEARING WALL W/UPLIFT

* SPH4/6/8 INSTALLED w/(12) 0.148" X 1-1/2" NAILS.
* SDWC SCREWS INSTALLED INTO WIDE FACE OF STUDS

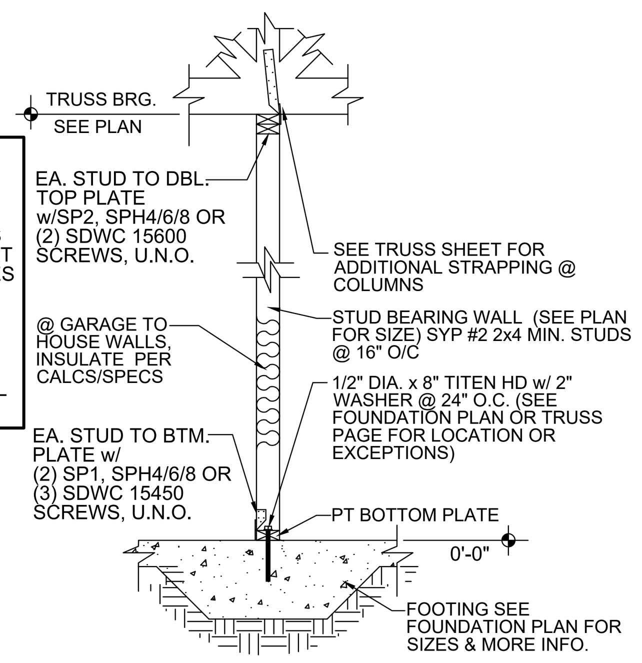

C / S-1 Load Brng. Interior Frame Wall Detail With Uplift
SCALE: NTS

SHINGLE / METAL /TILE ROOF - SEE ELEVATION PAGES FOR MORE INFO. FASTENING TO BE AS PER MANUFACTURERS SPECIFICATIONS. CONTRACTOR TO PROVIDE MANUF. DOCUMENTATION TO INSPECTOR @ TIME OF INSPECTION. IF SHINGLE IS USED, UNDERLAYMENT TO COMPLY WITH FBCR 905.1.1.

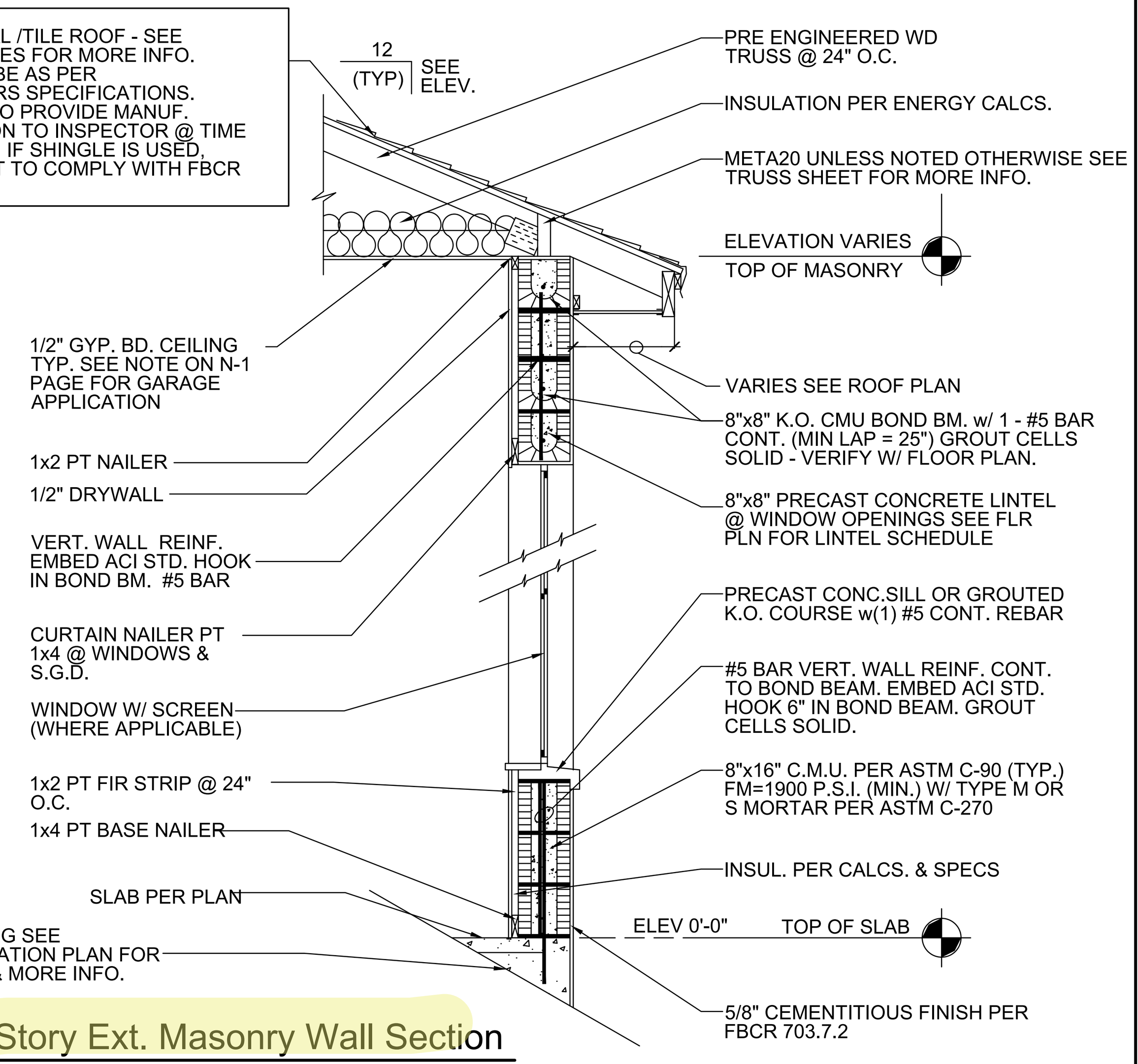

D / S-1 Typ. 1-Story Ext. Masonry Wall Section
SCALE: NTS

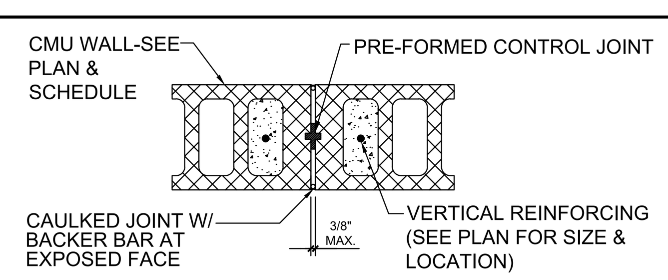

NOTE:
SEE N-1 FOR ADDITIONAL/ALTERNATE PARAMETERS.
CONTROL JOINT DOES NOT EXTEND THROUGH TIE BEAM/KO BLOCK COURSES

E / S-1 Example C.M.U. Wall Control Joint Detail
SCALE: NTS

* CONTROL JOINT LOCATIONS SHOWN ON THE FLOOR PLAN ARE RECOMMENDED LOCATIONS IF THE CONTRACTOR CHOOSES TO INSTALL, UNLESS SPECIFICALLY NOTED AS "REQUIRED"

* SPH4/6/8 INSTALLED w/(12) 0.148" X 1-1/2" NAILS.
* SDWC SCREWS INSTALLED INTO WIDE FACE OF STUDS

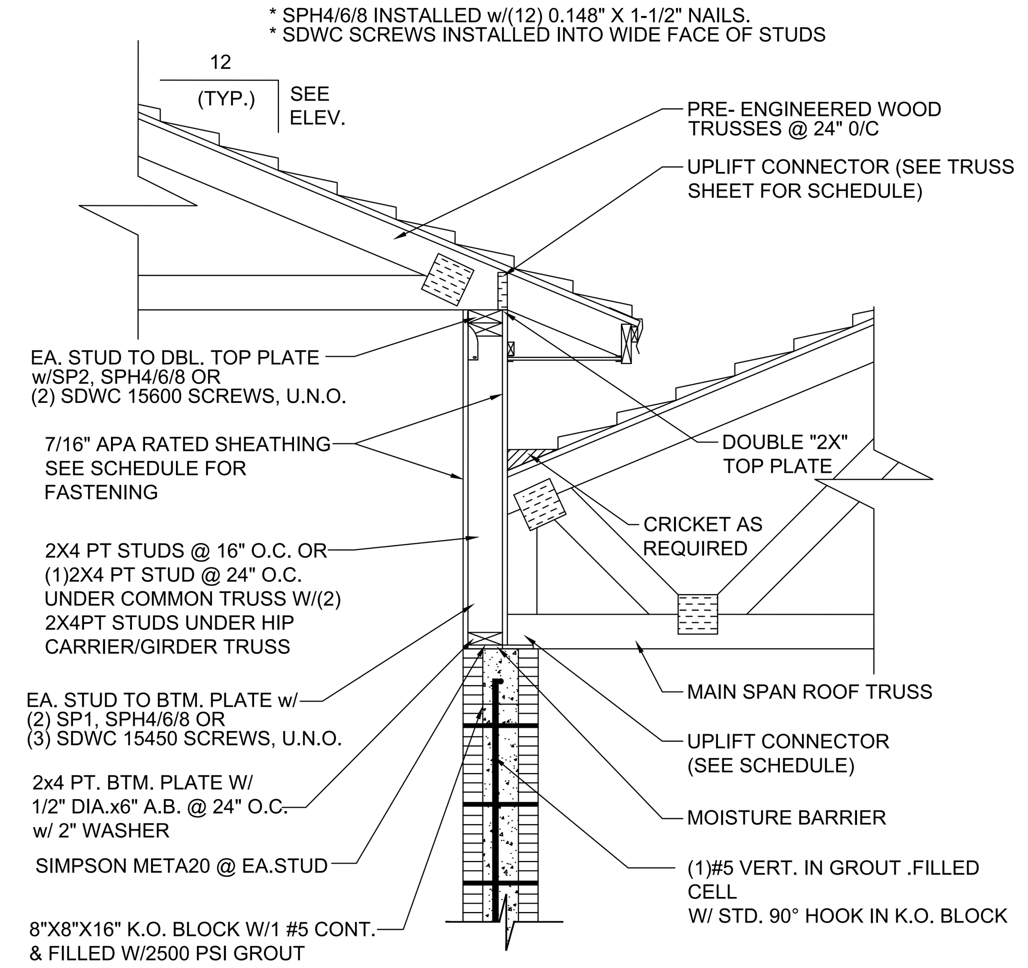

F / S-1 Kneewall Above Masonry Wall Detail
SCALE: NTS

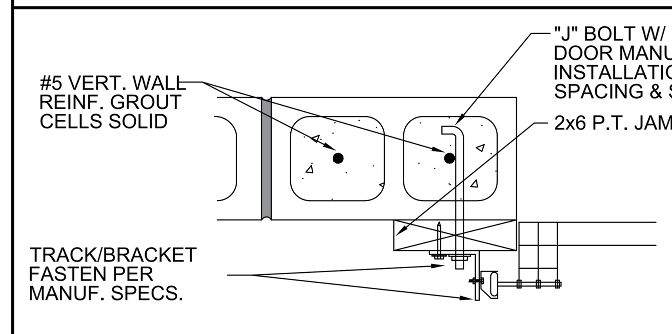

G / S-1 Garage Door Attachment Detail
SCALE: NTS

NOTE:
"NOTWITHSTANDING MANUFACTURER'S SPECIFICATIONS, JAMB SHALL BE 2x6 MIN. & SHALL BE ATTACHED TO THE MASONRY/CONCRETE w/ 1/2" DIA. x 8" A.B. AT 24" O.C. STARTING 9" MAX. FROM THE SLAB, USE 2" DIA. WASHERS MIN. AT EACH BOLT LOCATION. TRACK ATTACHMENTS TO THE JAMB ARE BY MANUFACTURER. THESE SPECIFICATIONS ARE MIN. STANDARDS, MORE STRINGENT CRITERIA PROVIDED BY THE GARAGE DOOR MANUFACTURER SHALL CONTROL. U.N.O."

* SPH4/6/8 INSTALLED w/(12) 0.148" X 1-1/2" NAILS.
* SDWC SCREWS INSTALLED INTO WIDE FACE OF STUDS

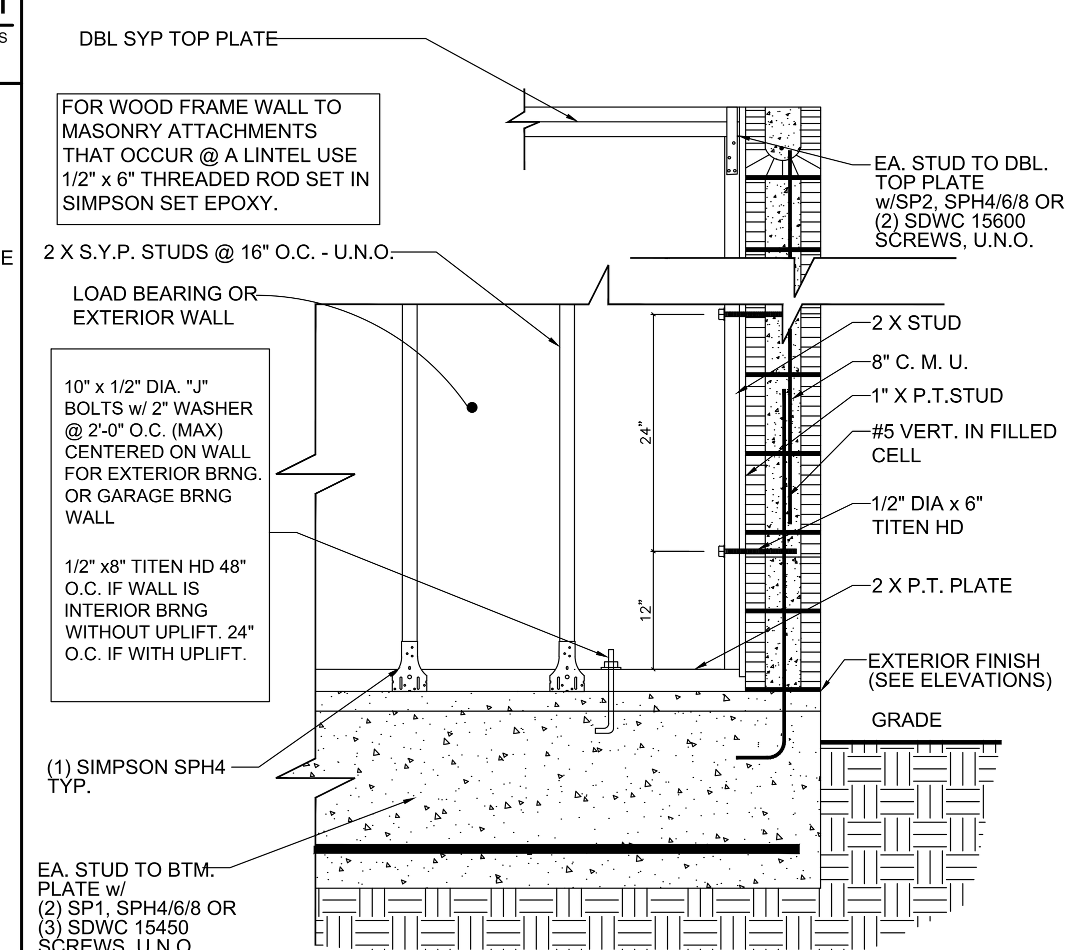

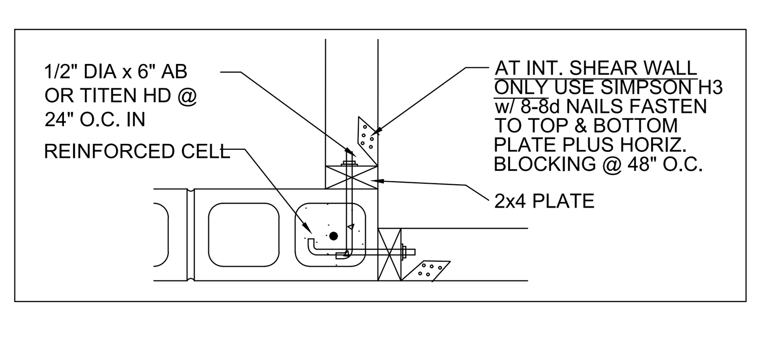

H / S-1 Typ. Wood Frame To Masonry Attachment Detail Brng. Wall Only
SCALE: NTS

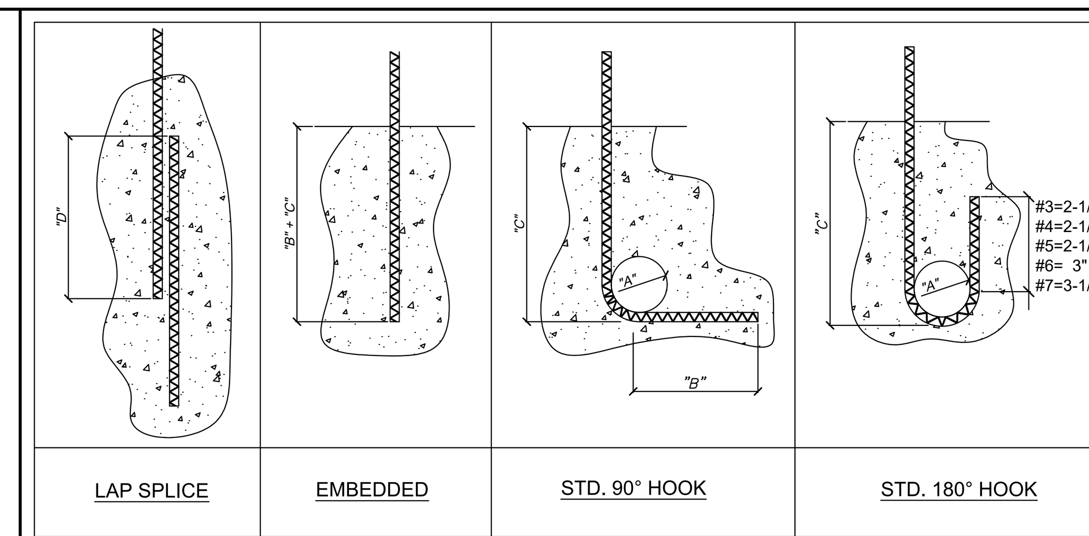

REQUIRED LAP SPLICE, EMBEDMENT, & HOOKED REINFORCING STEEL (INCHES)								
	GRADE 40				GRADE 60			
BAR SIZE	BEND DIAMETER	LENGTH		LAP SPLICE	BEND DIAMETER	LENGTH		LAP SPLICE
	"A"	"B"	"C"	"D"	"A"	"B"	"C"	"D"
#3	1 7/8	4 1/2	7	15	2 1/4"	4 1/2	9 1/4	16
#4	2 1/2	6	9 1/2	20	3"	6	12 1/2	21
#5	3 1/8	7.5	11 3/4	25	3 3/4"	7.5	15 1/2	26
#6	3 3/4	9	14	30	4 1/2"	9	18 1/2	35
#7	4 3/8	10.5	16 1/2	35	5 1/4"	10.5	21 3/4	53
#8	-	-	-	-	8"	12	24 3/4	74
#9	-	-	-	-	9"	13.5	28	95

NOT FOR USE IN THE HVHZ (DADE, BROWARD)

I / S-1 Rebar Lap, Embedment & Hook Schedule
SCALE: NTS

* SPH4/6/8 INSTALLED w/(12) 0.148" X 1-1/2" NAILS.
* SDWC SCREWS INSTALLED INTO WIDE FACE OF STUDS

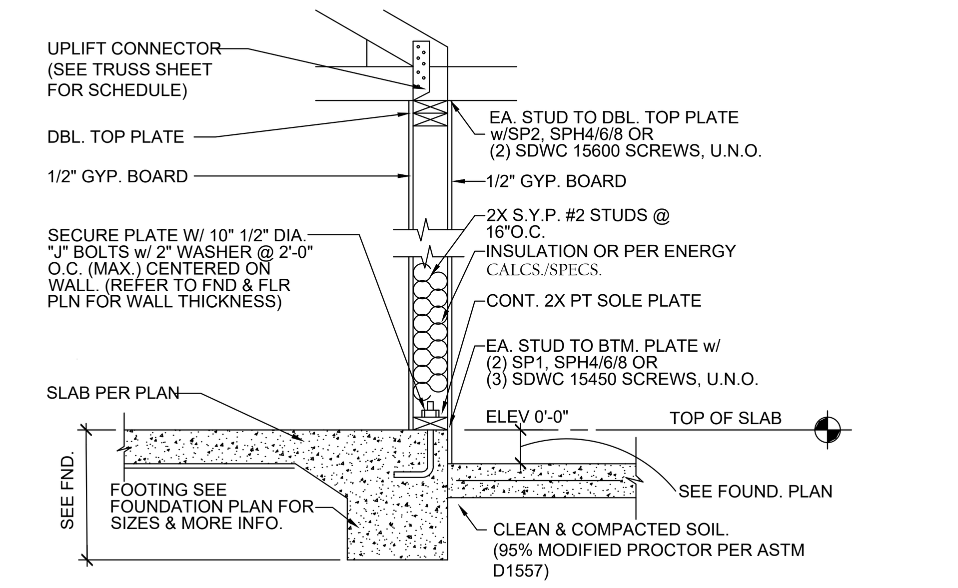

J / S-1 Typ. Garage Wall Section Brng. Wall w/Uplift
SCALE: NTS

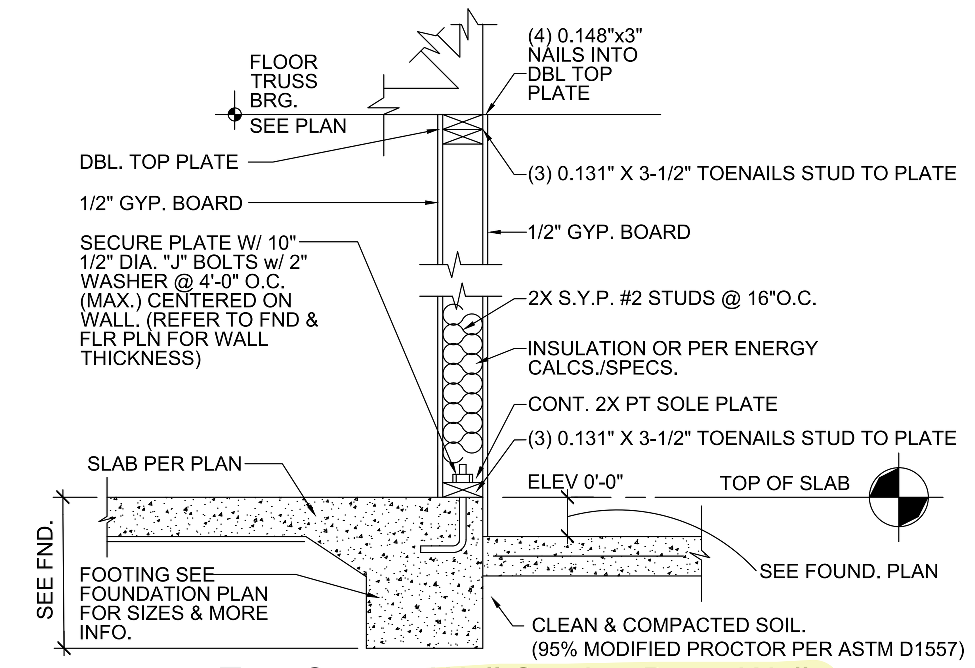

K / S-1 Typ. Garage Wall Section Brng. Wall Without Uplift
SCALE: NTS

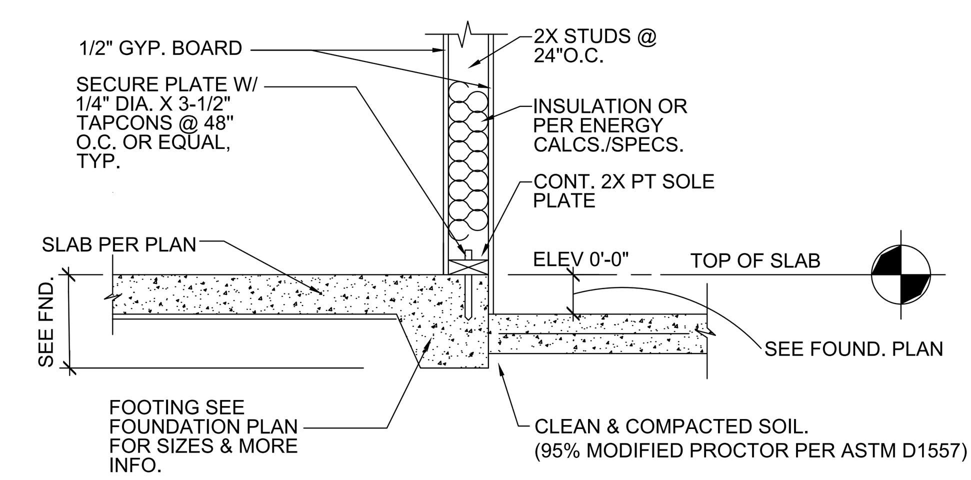

M / S-1 Garage Wall Section Non-Brng.
SCALE: NTS

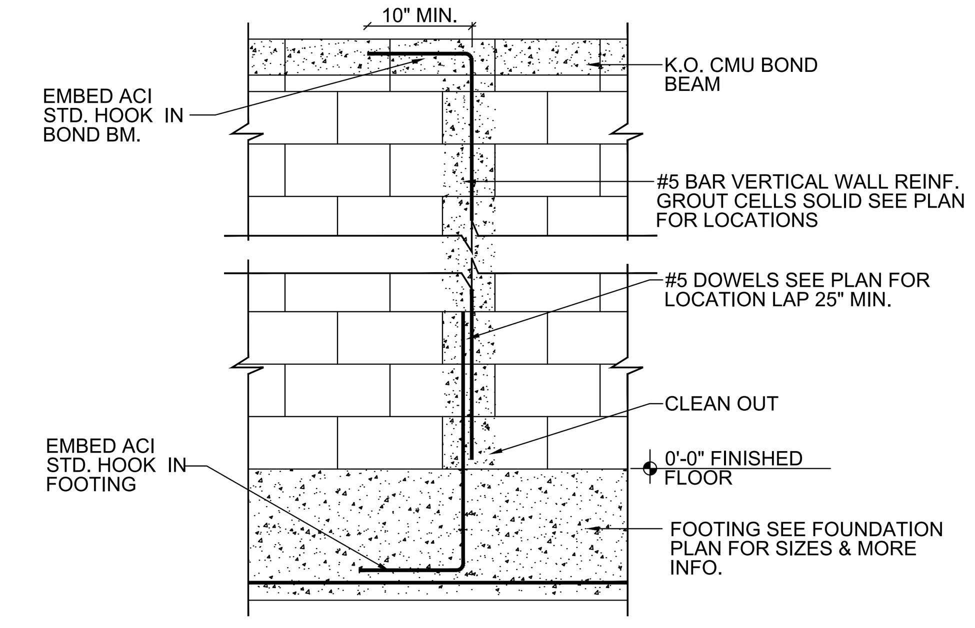

L / S-1 Typ. Masonry Reinforced Grouted Cell Detail
SCALE: NTS

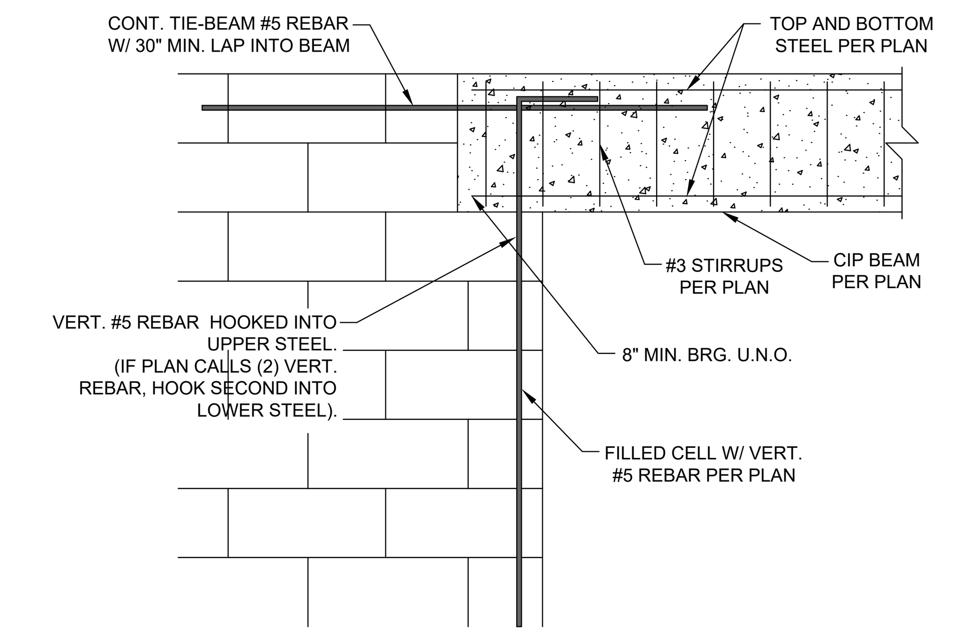

N / S-1 Typ Cast-In-Place (CIP) Concrete Beam Detail
SCALE: NTS

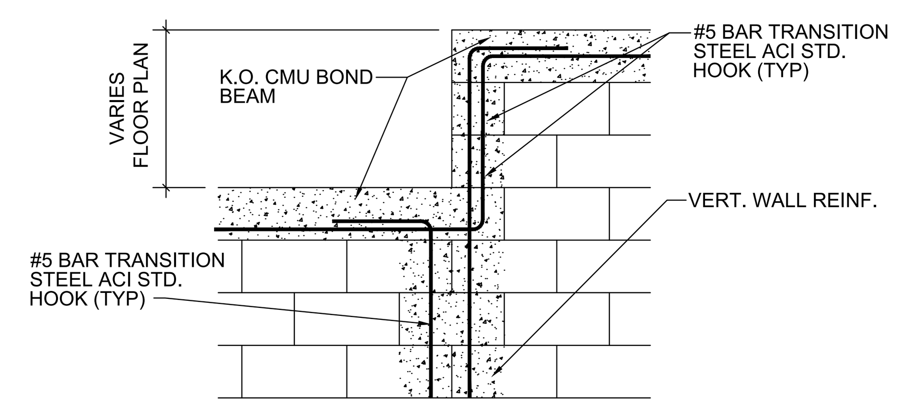

P / S-1 Typ. Masonry Height Transition Detail
SCALE: NTS

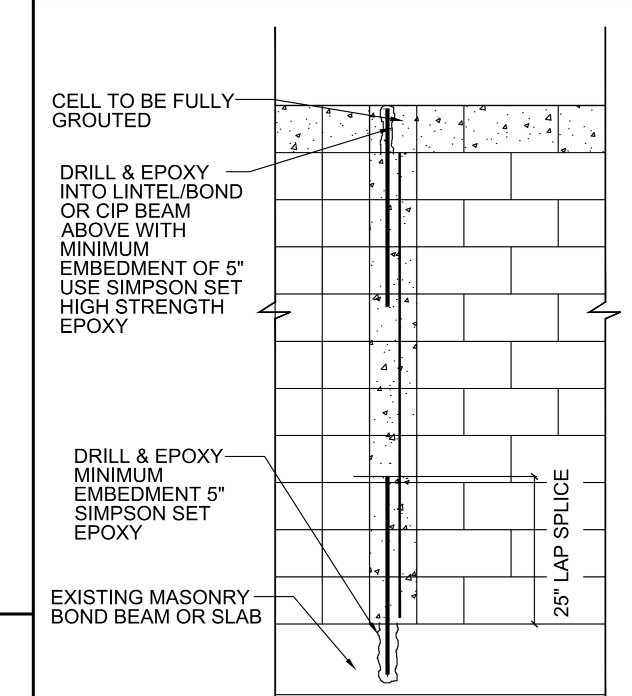

NOTE:
- MISSING DOWELS: WHERE FOOTING DOWELS ARE PLACED INCORRECTLY OR MISTAKENLY ELIMINATED, REPLACE DOWEL AT PROPER LOCATION W/ GRADE 60 #5 BAR. INSTALL IN SLAB W/ 5" MINIMUM EMBEDMENT, USE SIMPSON SET EPOXY. MAXIMUM OF 3 IN A ROW &/OR 10 TOTAL ON A PROJECT WITHOUT WRITTEN APPROVAL.
- MISPLACED DOWELS SHALL REMAIN IN PLACE GROUTED SOLID, UNLESS LOCATED WITHIN A WALK THROUGH OPENING. IN SUCH CASE, CUT THE DOWEL FLUSH TO THE SLAB AND COAT THE EXPOSED CUT END WITH AN EPOXY REBAR COATING.

Q / S-1 TYP. Retrofit Vert. Dowel Detail
SCALE: NTS

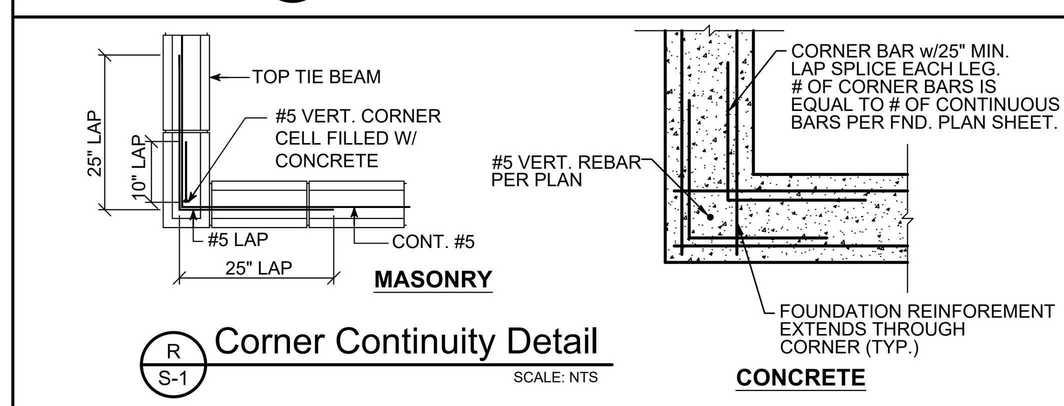

R / S-1 Corner Continuity Detail
SCALE: NTS

NOTE:
CONTRACTOR TO VERIFY ALL DIMENSIONS IN FIELD AND REPORT ANY DISCREPANCIES TO ENGINEER PRIOR TO STARTING ANY WORK.

NOTE:
CONTRACTOR MUST REVIEW ALL NOTES, DETAILS, CODES & STANDARDS WITHIN THE CONSTRUCTION DOCUMENTS AND APPLY WHERE APPLICABLE. IF CLARIFICATION IS REQUIRED, CONTACT OUR OFFICE PRIOR TO CONSTRUCTION.

THESE PLANS ARE PROPERTY OF VORTEX ENGINEERING, LLC., AND SHALL BE RETURNED UPON COMPLETION OF THE PROJECT. USE OR COPY IS PERMITTED BY CONTRACT ONLY. ANY CHANGES TO THESE PLANS, REGARDLESS OF HOW MINOR, WITHOUT WRITTEN APPROVAL OF VORTEX ENGINEERING, LLC, OR ANY CONSTRUCTION EXECUTED FROM THESE PLANS WITHOUT THE EXPRESS APPROVAL OF VORTEX ENGINEERING, LLC SHALL AUTOMATICALLY RENDER VORTEX ENGINEERING, LLC. HARMLESS TO ANY LIABILITY, CLAIMS, SUITS, OR LITIGATION BY ANY INTERESTED SPECIFICATIONS ACCOMPNY THESE PLANS, THEY SHOULD READ CAREFULLY FOR ADDITIONAL CONDITIONS.

REVISIONS	BY

I HEREBY CERTIFY THAT I HAVE REVIEWED THE ATTACHED DESIGN, AND FIND IT TO BE IN COMPLIANCE WITH SECTION R301 OF THE FLORIDA BUILDING CODE, RESIDENTIAL (8TH EDITION).

THE ENGINEER HAS NOT REVIEWED THE PRE-ENGINEERED TRUSS MANUF. LAYOUT TO DETERMINE ANY LOAD BEARING CONDITIONS AND RESERVES THE RIGHT TO MAKE ANY CHANGES AFTER TRUSS LOAD INFORMATION IS SUPPLIED TO THE ENGINEER.

SEALED FOR STRUCTURE ONLY

Asbed A. Avedikian, P.E.
FL REG # 86623

Andrew J. Meisheid, P.E.
FL REG # 83217

Vortex Engineering, LLC.
7001 Temple Terrace Highway
Tampa, Florida 33637
1-877-6VORTEX (1-877-686-7839
COA 28035

STRUCTURAL DETAILS
FBC 8th ED.

DATE	
SCALE	N.T.S.
DRAWN	MK/PDK/JRW
JOB	-

Sheet content:
Structural Details

NOTE:
DETAILS SHOWN ARE TYPICAL DETAILS THAT SHALL BE APPLIED WHERE CONDITION OCCURS ON THE STRUCTURE, UNLESS NOTED OTHERWISE WITHIN THE PLAN SET.

Sheet number:
S1

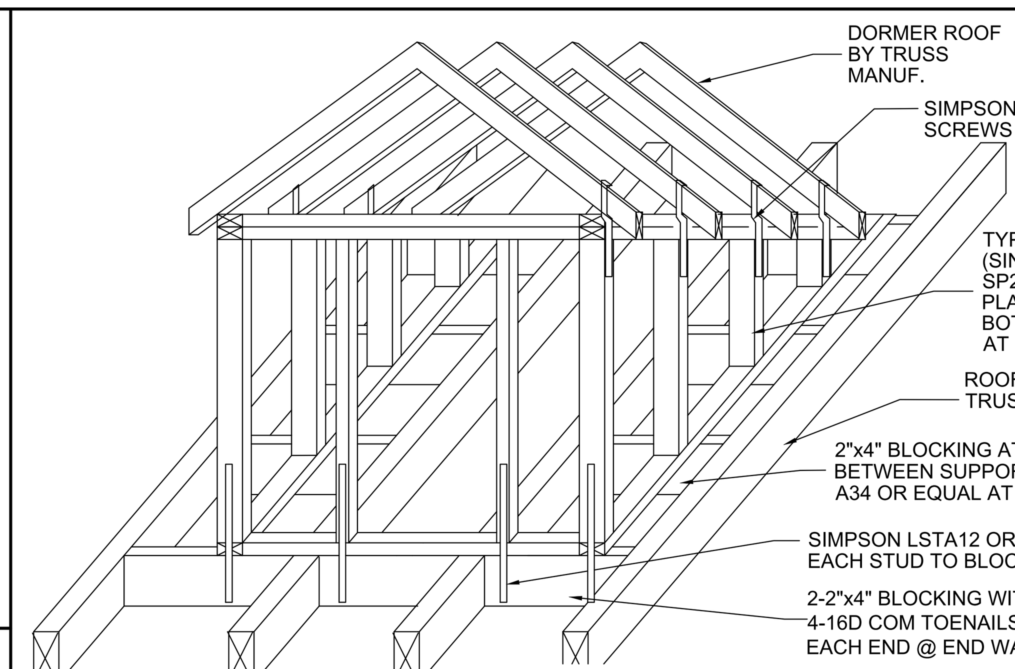

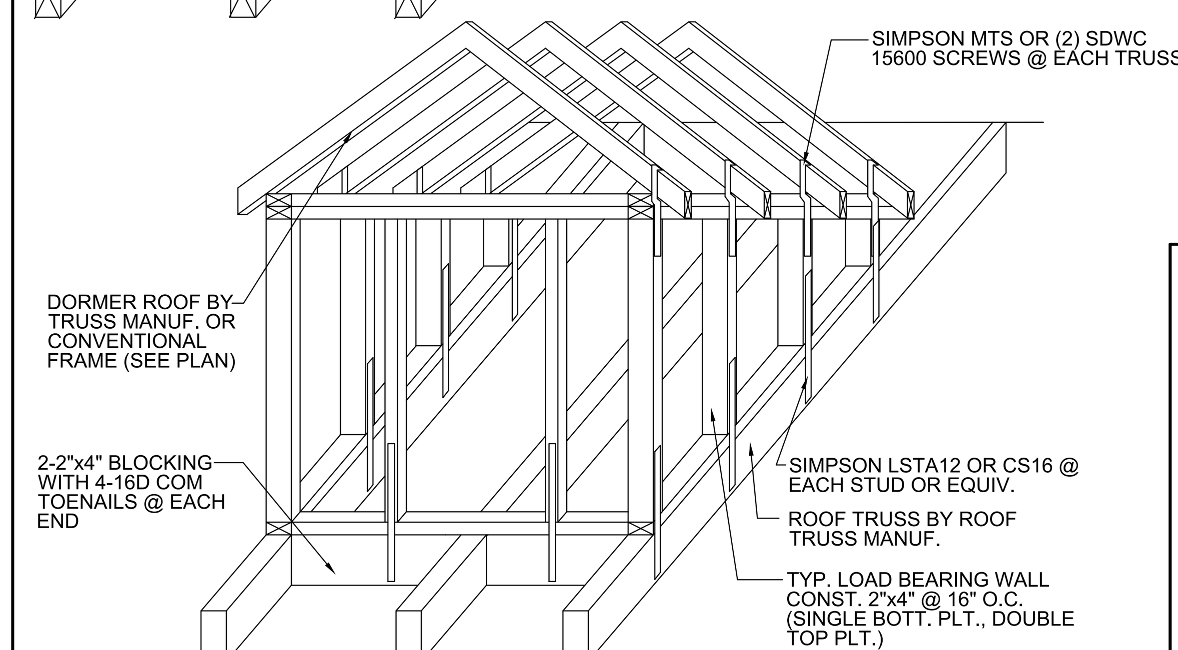

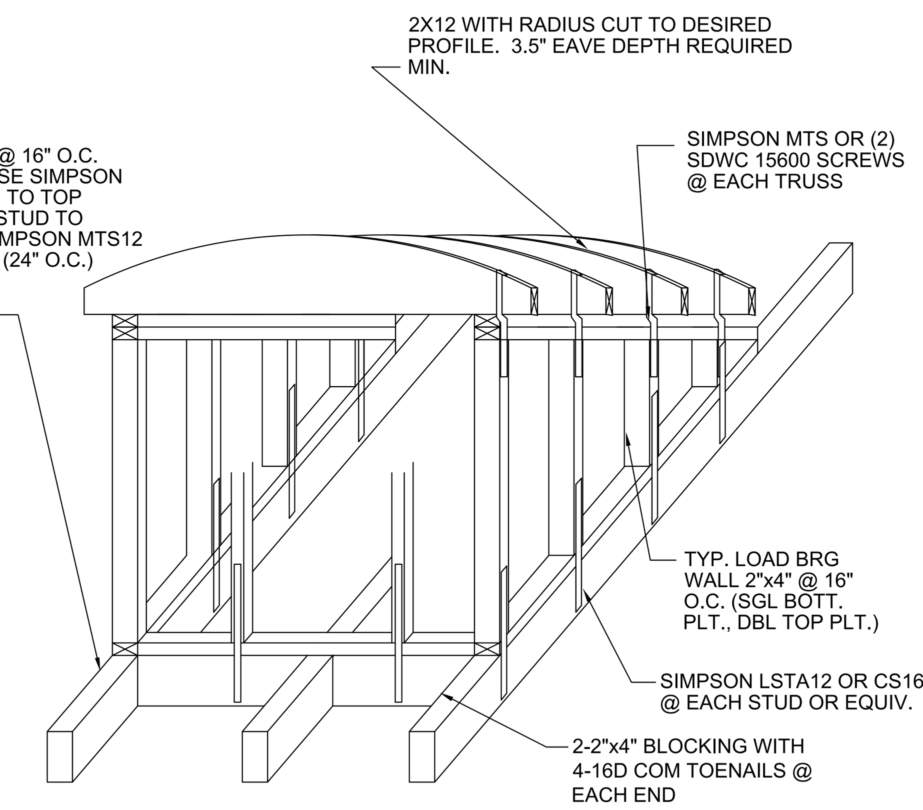

F / S-2 Misc. Dormer Knee Wall Attachment Details

SCALE: NTS

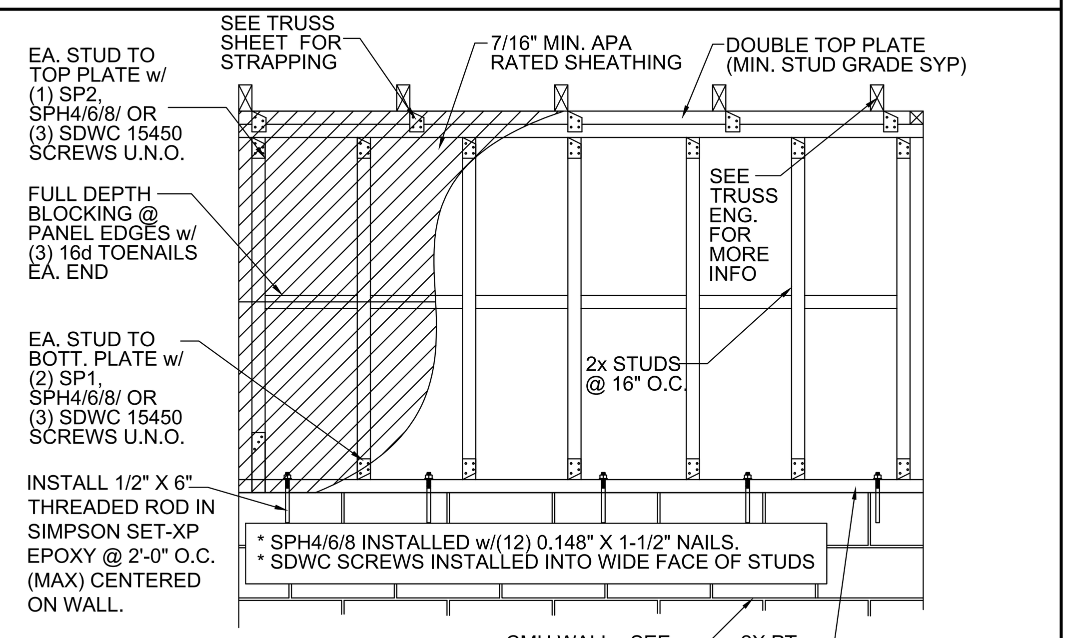

NOTE: FOR FRAME TO FRAME CONNECTION, WHEN BOTTOM PLATE BEARS ON FRAME DBL. TOP PLATE, ATTACH BOTTOM PLATE w/ SDS25412 SCREWS @ 12" O.C. STAGGERED AND EVERY OTHER UPPER STUD (32" O.C. MAX.) TO LOWER STUD (OR WRAP DBL. TOP PLATE IF STUD NOT ALIGNED) w/ (1) MSTA24 OR CS16

B / S-2 Structural Kneewall

SCALE: NTS

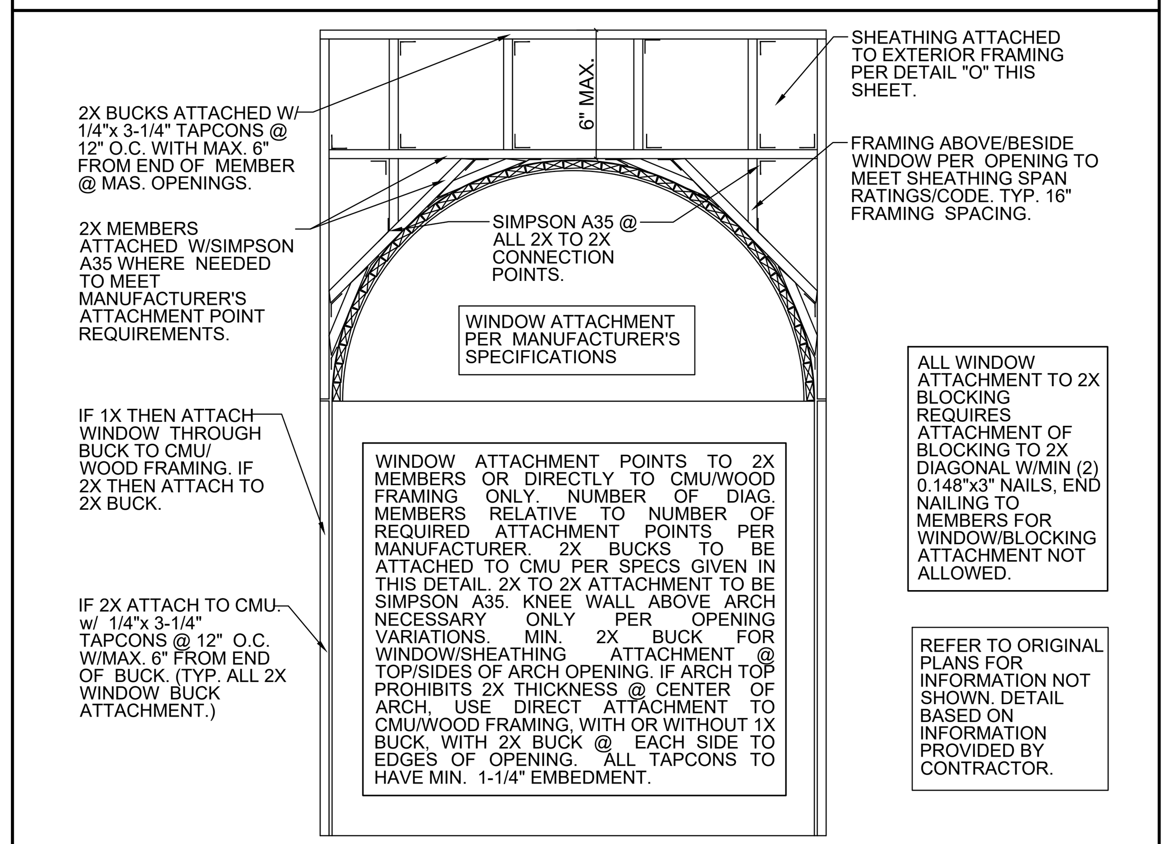

ALL WINDOW ATTACHMENT TO 2X BLOCKING REQUIRES ATTACHMENT OF BLOCKING TO 2X DIAGONAL W/MIN (2) 0.148"x3" NAILS, END NAILING TO MEMBERS FOR WINDOW/BLOCKING ATTACHMENT NOT ALLOWED.

REFER TO ORIGINAL PLANS FOR INFORMATION NOT SHOWN. DETAIL BASED ON INFORMATION PROVIDED BY CONTRACTOR.

M / S-2 General Irregular Window Attachment

SCALE: NTS

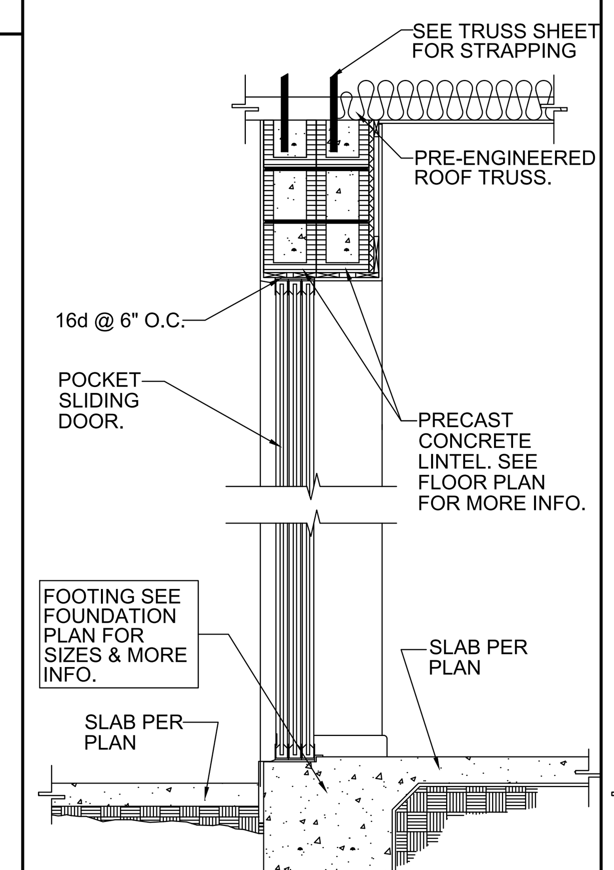

H / S-2 C.M.U. Lintel Pkt. Slider Detail

SCALE: NTS

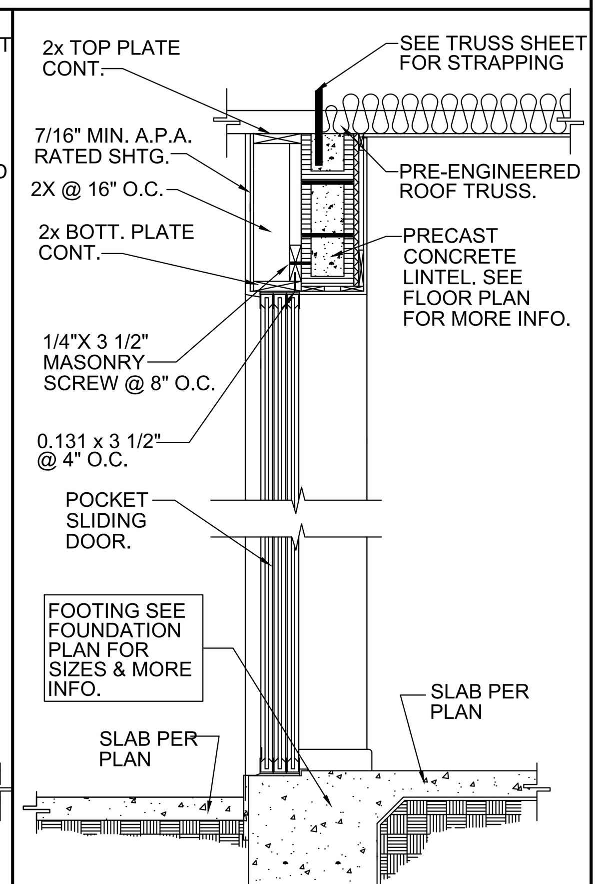

I / S-2 Wood Frame Pkt. Slider Detail

SCALE: NTS

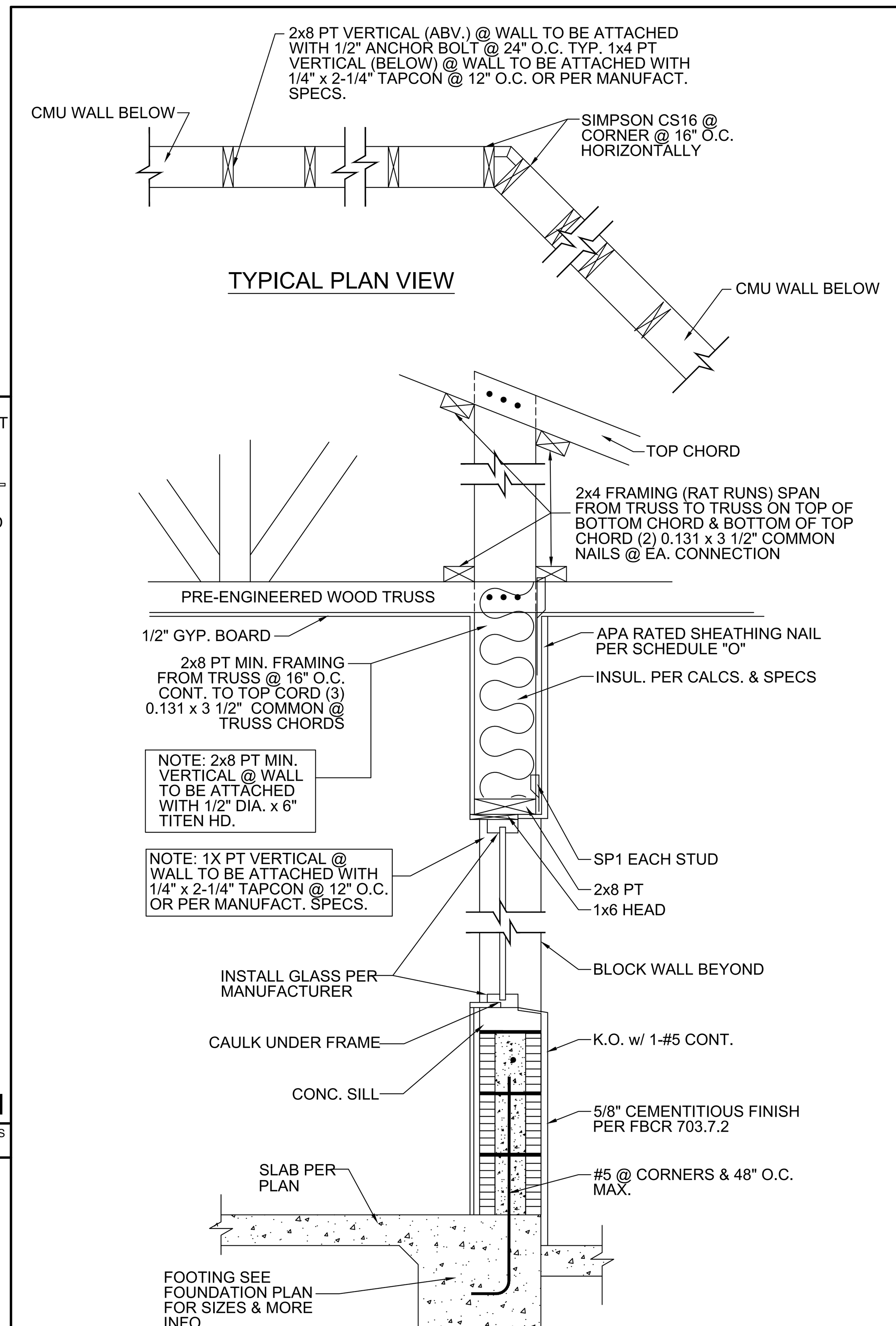

L / S-2 Non-Brng. Frame Down Header Detail - Multi-Use

SCALE: NTS

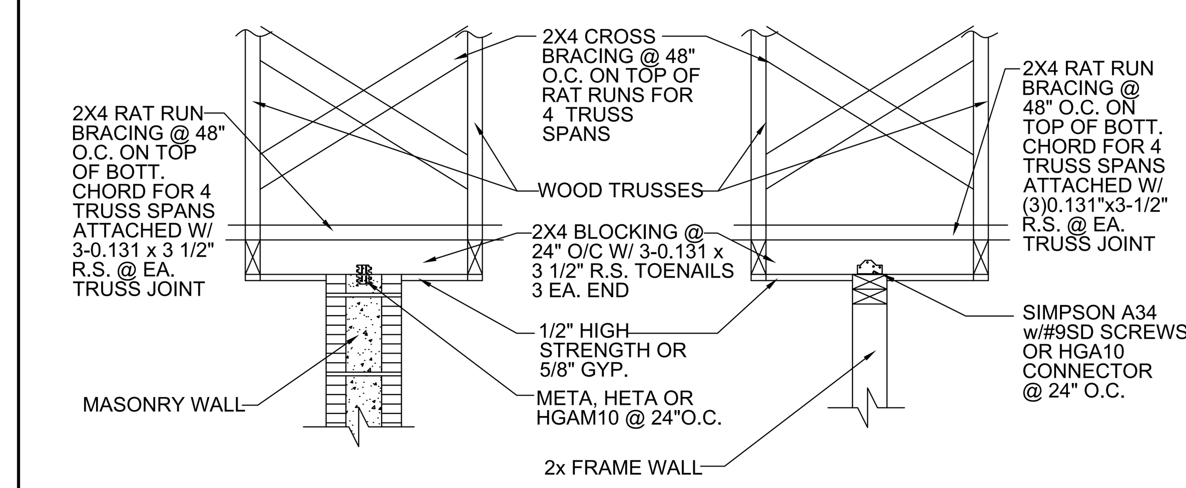

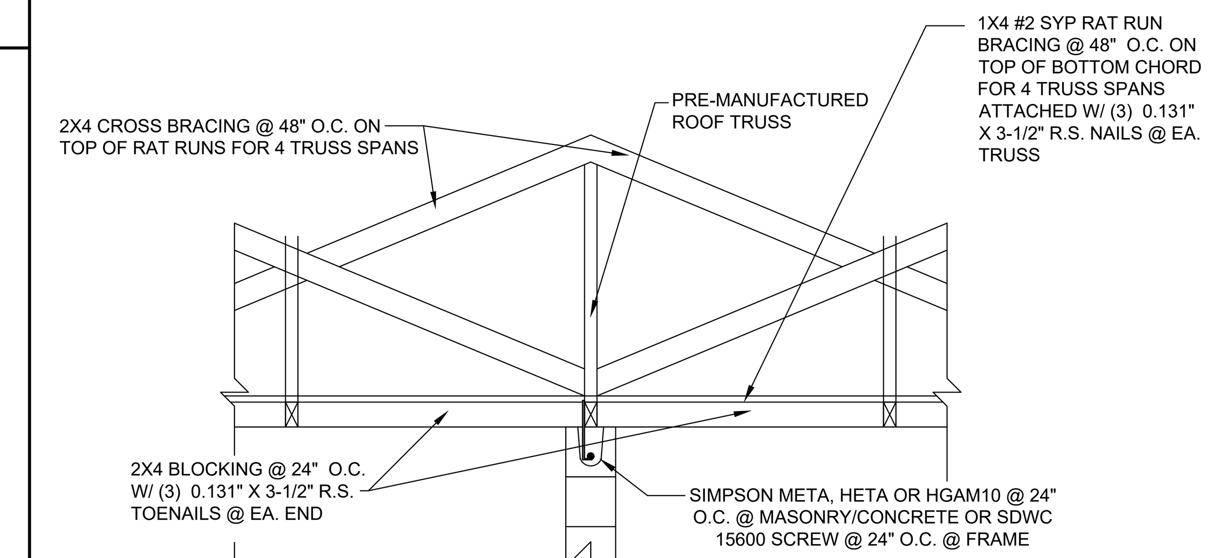

E / S-2 Ext. Wall Con. @ Non-Load Brng.Location

SCALE: NTS

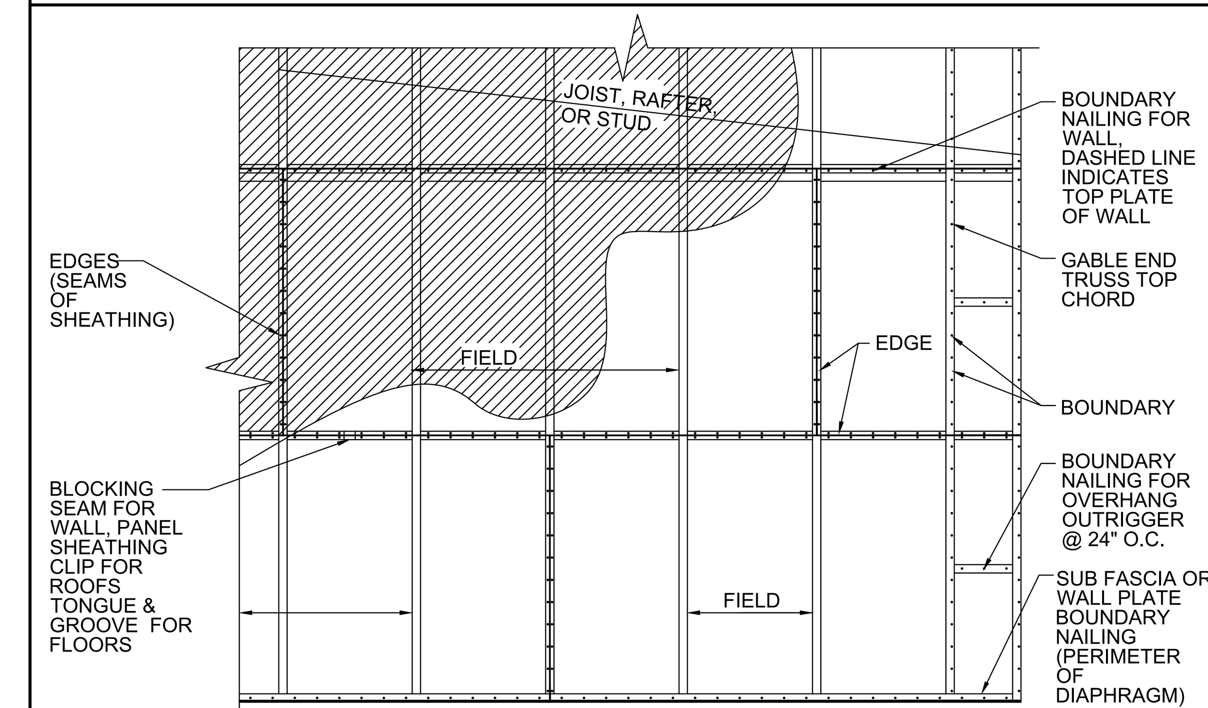

TYPICAL NAILING SCHEDULE

	NAIL	SHEATHING	BOUNDARY	EDGE	FIELD
ROOF	0.131 x 2 1/2" R.S.	SEE NOTE 6.6.1 SHEET N1	4"	4"	6" O.C. @ EXPOSURE B OR C 4" O.C. @ EXPOSURE D
WALL	0.131 x 3" COMMON	7/16"	3"	4"	6"
FLOOR	0.131 x 3 1/2" COMMON	3/4" T.G.	6"	6"	12"

ALL SHEATHING APA APPROVED, EXTERIOR GRADE. FOR ROOF SHEATHING, USE 2" FULL HEAD RING SHANK (0.280" MIN.)

NOTE:
ON 16-24" PANELS DOUBLE PLYCLIP THE SIDE ADJACENT TO THE FULL WIDTH PANEL. NOT REQUIRED @ RIDGE OR HIP. @ 12" OR LESS USE LUMBER ONLY BLOCKING 2"x4" FLATWISE OR EDGEWISE ON BOTH PANEL EDGES.

GYPSUM STANDARD SCREW/NAILING ACCEPTABLE PATTERNS AND ATTACHMENTS:
- 1/2" GYP. ON 16-24" O.C. WOOD STUD WALLS AND FURRED MASONRY ATTACH WITH 1-1/2" GALV. ROOFING NAIL OR 1-1/4" TYPE W OR S SCREWS @ 7" O.C. ALONG ALL SUPPORTS, MIN.
- 1/2" GYP CEILING ON 24" O.C. MAX. FRAMING ATTACH WITH 1-1/2" SCREWS AT 6" O.C. ALONG EDGES AND 12" O.C. IN FIELD AT INTERMEDIATE SUPPORTS, MIN.
- 5/8" GYP. ON 16-24" O.C. WOOD STUD WALLS AND FURRED MASONRY ATTACH WITH 1-3/4" GALV. ROOFING NAIL OR 1-5/8" TYPE W OR S SCREWS @ 7" O.C. ALONG ALL SUPPORTS, MIN.
- 5/8" GYP CEILING ON 24" O.C. MAX. FRAMING ATTACH WITH 1-5/8" SCREWS AT 6" O.C. ALONG EDGES AND 12" O.C. IN FIELD AT INTERMEDIATE SUPPORTS, MIN.

NOTE: CONTRACTOR SHALL TAKE CARE AND NOT OVERDRIVE NAILS MORE THAN 1/16". IF MORE THAN 20% OF THE NAILS ARE OVERDRIVEN BY OVER 1/16", OR IF ANY ARE OVERDRIVEN BY 1/8", CONTACT THE E.O.R. FOR REVIEW.

O / S-2 Typ. Sheathing/Nailing Schedules (Floor, Roof, Wall)

SCALE: NTS

* FOR R.O. 0' TO 5': (1) MSTA24 OR (1) CS16
* FOR R.O. >5' TO 9': (2) MSTA24 OR (2) CS16
* FOR R.O. >9': (3) MSTA24 OR (3) CS16
* EQUAL AMOUNT NAILS EA. SIDE

SPECIFICATIONS FOR KINGS+JACKS

ROUGH OPENING SIZE	KING STUDS	JACK STUDS
0'-0" TO 3'-6"	1	1
3'-7" TO 5'-0"	1	2
5'-1" TO 9'-0"	2	2
OVER 9'	2	3

*CHART ABOVE APPLIES TO EA. SIDE OF HEADER OPENING.
*ANY DIFFERING NOTATIONS FOR KINGS OR JACKS ON THE PLAN SET SHALL CONTROL.

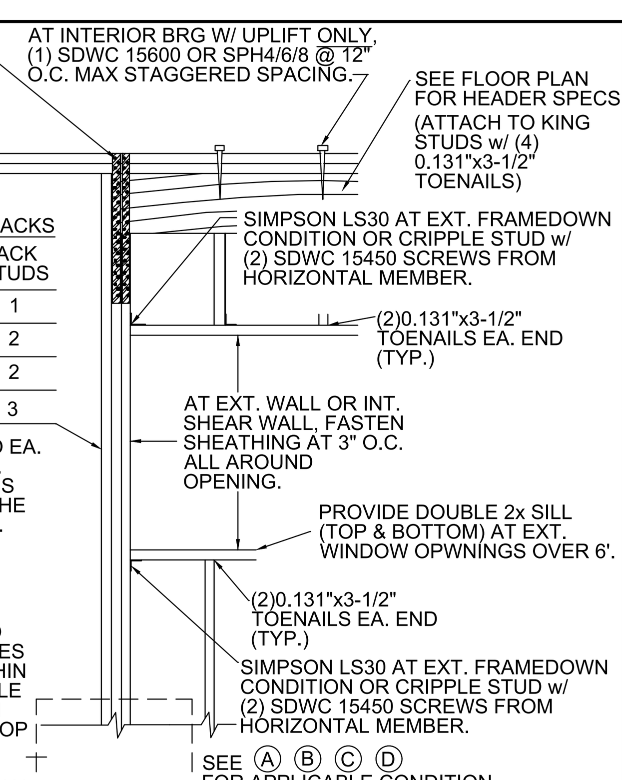

*NOTE:WHEN NECESSARY TO MANTAIN PROPER CLEARANCES FOR THE WINDOW/DOOR WITHIN AN OPENING, IT IS ACCEPTABLE TO UPSET THE HEADER SUCH THAT ONE OR BOTH OF THE TOP PLATES IS ELIMINATED TO MAINTAIN THE FULL DEPTH HEADER SPECIFIED IN THE PLAN SET. IT IS NOT ACCEPTABLE TO SUBSTITUTE A LESSER DEPTH HEADER, OR NOTCH HEADER, WITHOUT WRITTEN APPROVAL FROM THE E.O.R.

*NOTE: ALL STRAPPING AND SCREWS INDICATED WITHIN THIS DETAIL MAY BE ELIMINATED AT ANY LOAD BRG WALL <u>WITHOUT</u> UPLIFT, U.N.O.

*NOTE:ANY CONNECTOR DESIGNATED ON THE FLOOR PLAN SHALL CONTROL, EVEN IF SAID CONNECTOR IS OF LESSER CAPACITY THEN WHAT IS SHOWN WITHIN THIS DETAIL.

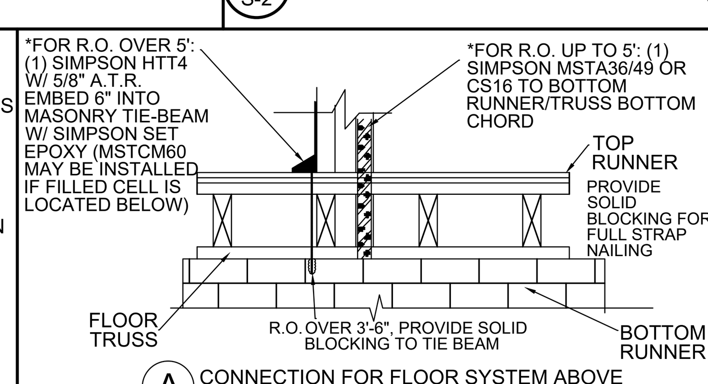

A CONNECTION FOR FLOOR SYSTEM ABOVE MASONRY

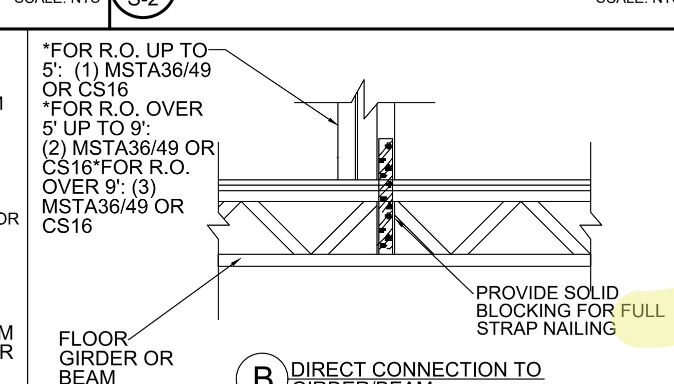

B DIRECT CONNECTION TO GIRDER/BEAM

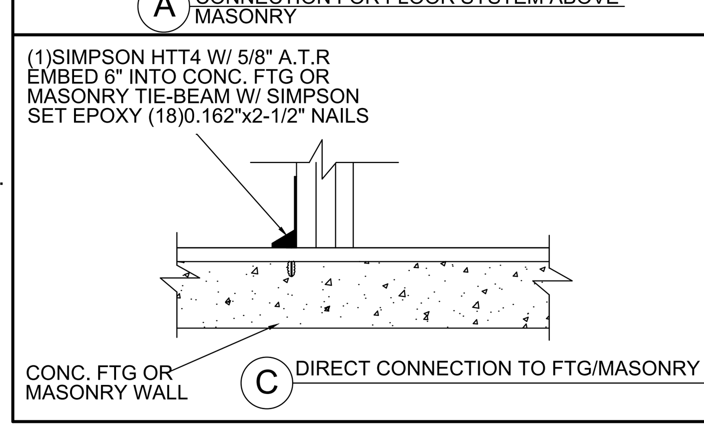

C DIRECT CONNECTION TO FTG/MASONRY

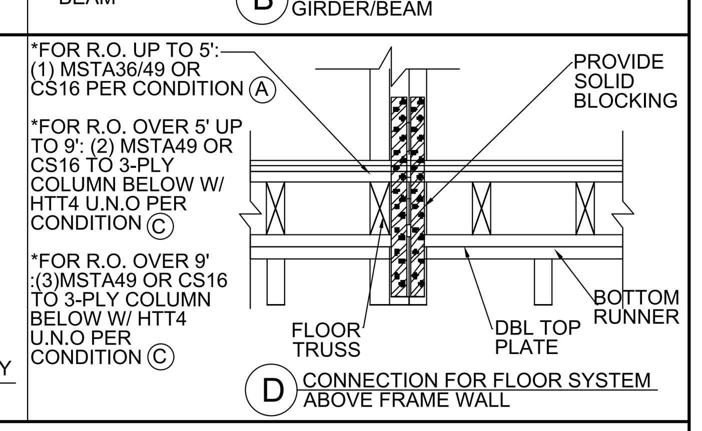

D CONNECTION FOR FLOOR SYSTEM ABOVE FRAME WALL

J / S-2 TYP. Load Bearing Header Detail - Interior & Exterior

SCALE: NTS

"J" BOLT REPLACEMENT CHART:

- THE FOLLOWING "J" BOLTS CAN BE REPLACED WITH THE CORRESPONDING BOLTS. THE REVERSE IS NOT APPLICABLE. FOR FRAME TO SLAB APPLICATION ONLY.
- NOTE : THE STRENGTH OF THE CONCRETE SHOULD BE MIN. 2500 PSI. SUBSTITUTION OF "J" BOLTS WITH EXPANSION BOLTS IS NOT PERMITTED.
- FOUNDATION PAGE TAKES PRECEDENCE.
- ALL OTHER BOLT OPTIONS MUST BE REVIEWED & APPROVED BY E.O.R. IN WRITING.

"J" BOLTS	TITEN HD BOLTS	THREADED ROD SET IN SIMPSON SET-XP EPOXY
1/2" x 6"	1/2" x 8"	1/2" x 5" EMBED
1/2" x 8"	1/2" x 8"	1/2" x 5" EMBED
1/2" x 10"	1/2" x 8"	1/2" x 5" EMBED
5/8" x 6"	5/8" x 6"	5/8" x 5" EMBED
5/8" x 8"	5/8" x 8"	5/8" x 5" EMBED

NOTE:
CONTRACTOR TO VERIFY ALL DIMENSIONS IN FIELD AND REPORT ANY DISCREPANCIES TO ENGINEER PRIOR TO STARTING ANY WORK.

NOTE:
CONTRACTOR MUST REVIEW ALL NOTES, DETAILS, CODES & STANDARDS WITHIN THE CONSTRUCTION DOCUMENTS AND APPLY WHERE APPLICABLE. IF CLARIFICATION IS REQUIRED, CONTACT OUR OFFICE PRIOR TO CONSTRUCTION.

THESE PLANS ARE PROPERTY OF VORTEX ENGINEERING, LLC., AND SHALL BE RETURNED UPON COMPLETION OF THE PROJECT. USE OR COPY IS PERMITTED BY CONTRACT ONLY. ANY CHANGES TO THESE PLANS, REGARDLESS OF HOW MINOR, WITHOUT WRITTEN APPROVAL OF VORTEX ENGINEERING, LLC, OR ANY CONSTRUCTION EXECUTED FROM THESE PLANS WITHOUT THE EXPRESS APPROVAL OF VORTEX ENGINEERING, LLC SHALL AUTOMATICALLY RENDER VORTEX ENGINEERING, LLC. HARMLESS TO ANY LIABILITY, CLAIMS, SUITS, OR LITIGATION BY ANY INTERESTED SPECIFICATIONS ACCOMPNY THESE PLANS, THEY SHOULD READ CAREFULLY FOR ADDITIONAL CONDITIONS.

REVISIONS	BY

I HEREBY CERTIFY THAT I HAVE REVIEWED THE ATTACHED DESIGN, AND FIND IT TO BE IN COMPLIANCE WITH SECTION R301 OF THE FLORIDA BUILDING CODE, RESIDENTIAL (8TH EDITION).

THE ENGINEER HAS NOT REVIEWED THE PRE-ENGINEERED TRUSS MANUF. LAYOUT TO DETERMINE ANY LOAD BEARING CONDITIONS AND RESERVES THE RIGHT TO MAKE ANY CHANGES AFTER TRUSS LOAD INFORMATION IS SUPPLIED TO THE ENGINEER.

SEALED FOR STRUCTURE ONLY

Asbed A. Avedikian, P.E.
FL REG # 86623

Vortex Engineering, LLC.
7001 Temple Terrace Highway
Tampa, Florida 33637
1-877-6VORTEX (1-877-686-7839
COA 28035

Andrew J. Meisheid, P.E.
FL REG # 83217

STRUCTURAL DETAILS

FBC 8th ED.

DATE	
SCALE	N.T.S.
DRAWN	MK/PDK/JRW
JOB	-

Sheet content:

Structural Details

NOTE:
DETAILS SHOWN ARE TYPICAL DETAILS THAT SHALL BE APPLIED WHERE CONDITION OCCURS ON THE STRUCTURE, UNLESS NOTED OTHERWISE WITHIN THE PLAN SET.

Sheet number:

S2

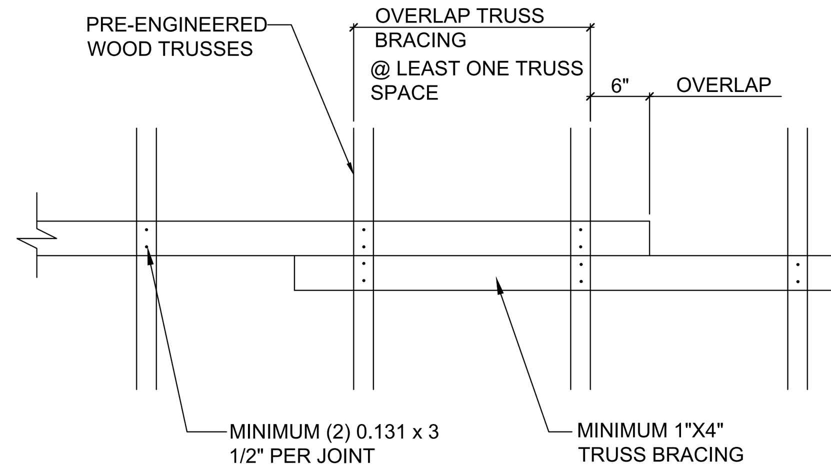

A S-3 Truss Bracing Overlap Detail
SCALE: NTS

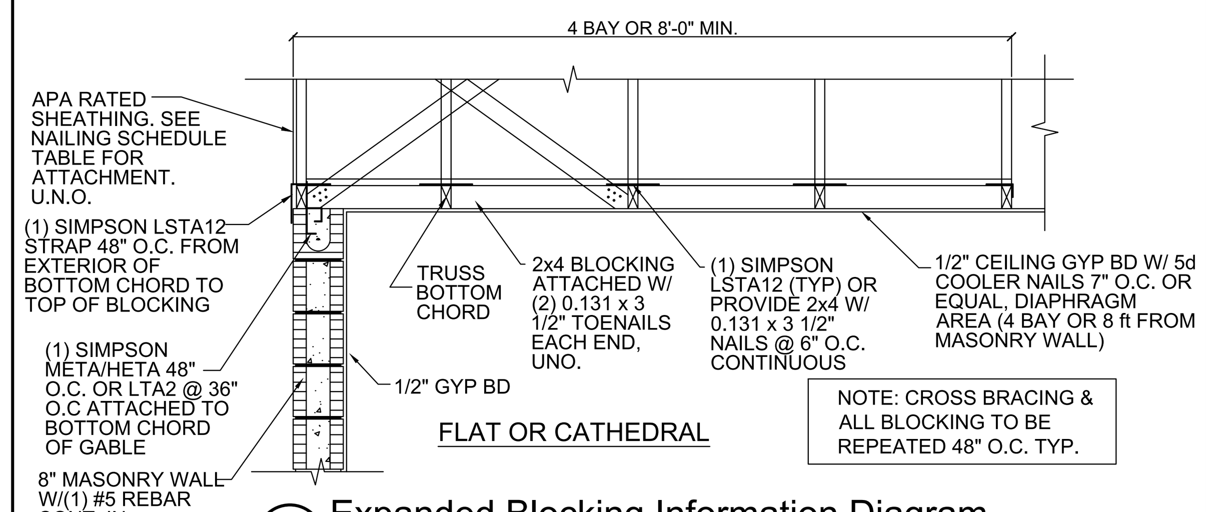

E S-3 Expanded Blocking Information Diagram
SCALE: NTS

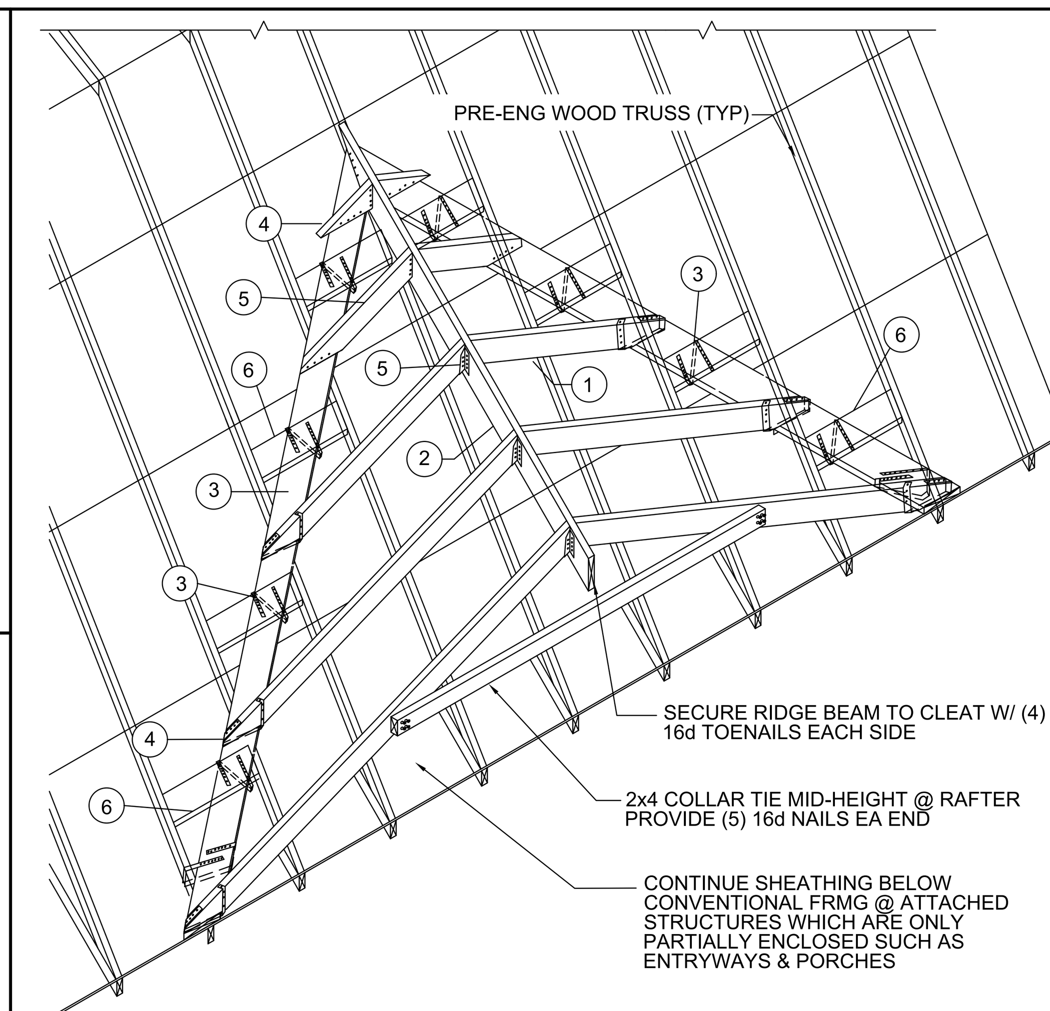

NOTES:

1. ALL RAFTERS SHALL BE #2 SOUTHERN YELLOW PINE @ 24" O.C. MAX. SECTION SIZE SHALL BE DETERMINED ACCORDING TO THE LENGTH OF SPAN AS FOLLOWS:

UP TO 4'-0"	2X4
4'-0" TO 8'-0"	2X6
8'-0" TO 12'-0"	2X8
12'-0" TO 15'-0"	2X10
15'-0" TO 18'-0"	2X12

2. RIDGE BEAM SHALL BE #2 SOUTHERN YELLOW PINE. SECTION SIZE SHALL BE 2" (NOMINAL) LARGER THAN RAFTERS W/ A MAXIMUM RIDGE SIZE OF 2x12 FOR 2x12 RAFTERS.
3. CLEAT SHALL BE A #2 SOUTHERN YELLOW PINE 2x10. IT SHALL BE FASTENED AS SHOWN W/ SIMPSON MSTA24 TENSION STRAPS @ EACH TRUSS USING (14) 10d NAILS. INSTALL THE STRAP BY CUTTING A HOLE INTO THE SHEATHING @ EACH SIDE OF TRUSS & THREADING THE U-SHAPED STRAP FROM BOTTOM OF TRUSS TOP CHORD TO TOP OF CLEAT.
4. SECURE RAFTERS TO CLEAT & WRAP TO TOP CHORD USING SIMPSON HTS20 W/ (20) 10d NAILS FOR 2x12 RAFTERS, (16) 10d NAILS FOR 2x10 RAFTERS, (14) 10d NAILS FOR 2x6 RAFTERS WITH SPANS OF 4'-0" OR GREATER. 2x6 RAFTERS W/ SPANS LESS THAN 4'-0" SHALL BE TOE-NAILED TO CLEAT W/ (8) 10d NAILS.
5. SECURE RAFTERS TO RIDGE BEAM USING SIMPSON LSSU210 SLOPING HANGER W/ (10) 10d NAILS INTO RIDGE BEAM & (7) 10d x 1 1/2" NAILS INTO 2x12 RAFTERS. USE (8) 10d & (6) 10d RESPECTIVELY FOR 2x10 RAFTERS. USE LSSU28 W/ (10) 10d & (5) 10d x 1 1/2" FOR 2x8 RAFTERS. USE LSU26 W/ (6) 10d & (5) 10d x 1 1/2" FOR 2x6 RAFTERS WITH SPANS OF 4'-0" OR GREATER. 2x6 RAFTERS W/ SPANS LESS THAN 4'-0" MAY BE TOE-NAILED TO RIDGE BEAM W/ (8) 10d NAILS.
6. WHERE NEEDED, PROVIDE FLAT 2X6 BLOCKING BETWEEN TRUSSES AT TOP CORD FOR INSTALLATION SUPPORT OF MSTA24 STRAPS. SECURE BLOCKING W/ (3) 16d TOENAILS AT EACH END INTO TOP CORD.

J S-3 Valley Set Attachment Details
SCALE: NTS

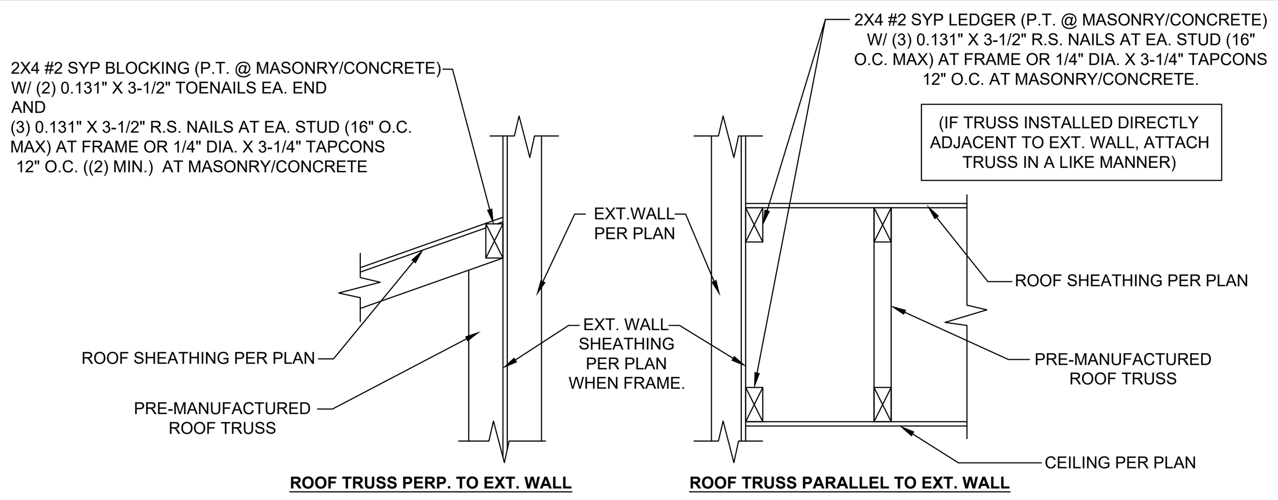

P S-3 Typ. Roof Diaphram @ Exterior Wall
SCALE: NTS

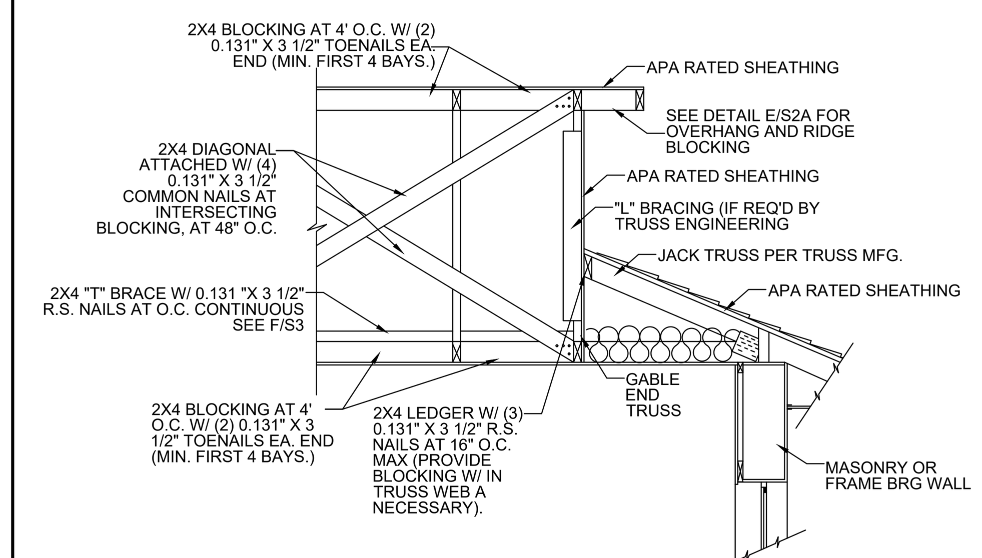

B S-3 Typical Setback Gable End
SCALE: NTS

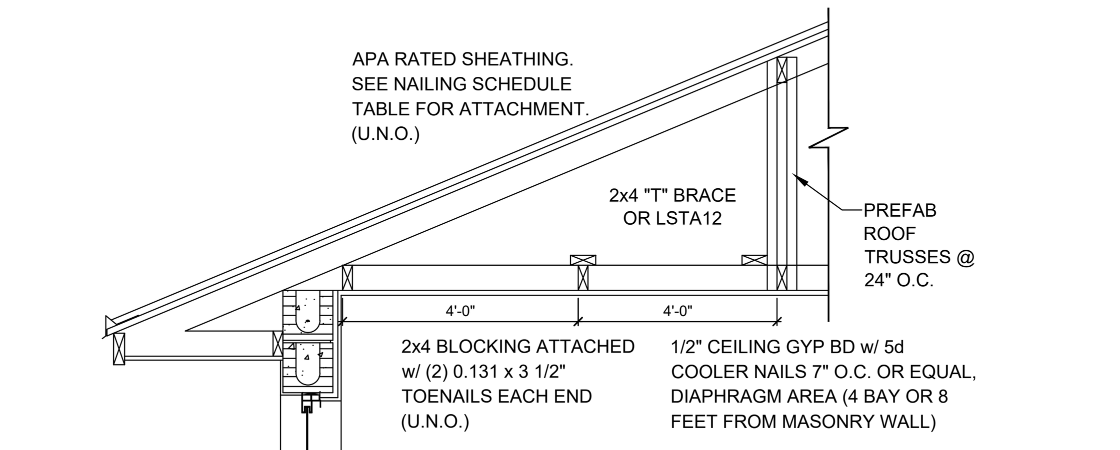

F S-3 Gable Diaphram Side Wall
(For Illustration Only)
SCALE: NTS

NOTES:
1. ADJACENT NAILS ARE DRIVEN FROM OPPOSITE SIDES OF THE COLUMN
2. ALL NAILS PENETRATE @ LEAST 3/4 OF THE THICKNESS OF THE LAST LAMINATION
3. FOR 4-PLY, PROVIDE 1/4" DIA. X 5 1/2" LAG SCREWS OR EQUAL (SPACE AS SHOWN FOR 3-PLY)
4. FOR 5-PLY, PROVIDE 1/4" DIA. X 7" LAG SCREWS OR EQUAL (SPACE AS SHOWN FOR 3-PLY)
5. REFER TO NDS SECTION 15.3 FOR ADDITIONAL INFORMATION

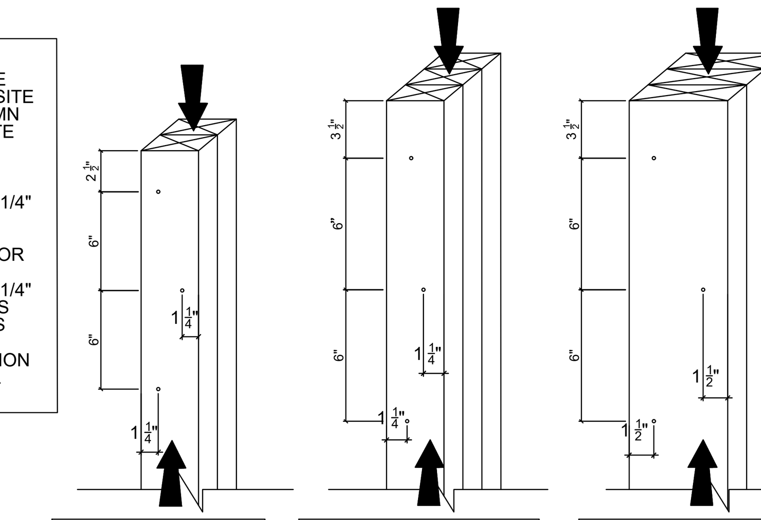

(2) 2"x LAMINATIONS ATTACH w/ 0.131 x 3" R.S. NAILS STAGGERED @ 6" O.C. ALONG THE LENGTH OF THE COMPONENT

(3) 2"x LAMINATIONS ATTACH w/ (2) ROWS OF 0.131 x 3" R.S. NAILS @ 6" O.C. ALONG THE LENGTH OF THE COMPONENT, FOR COMPONENTS WIDER THAN 8" USE (3) ROWS.

(4) 2"x LAMINATIONS ATTACH w/ SIMPSON SDS25600 WOOD SCREWS STAGGERED @ 6" O.C. ALONG THE LENGTH OF THE MEMBER, FOR COMPONENTS WIDER THAN 8" USE (2) ROWS @ 6" O.C..

Q S-3 Typ. Nailing Schedule for Built-Up Columns @ Beams
SCALE: NTS

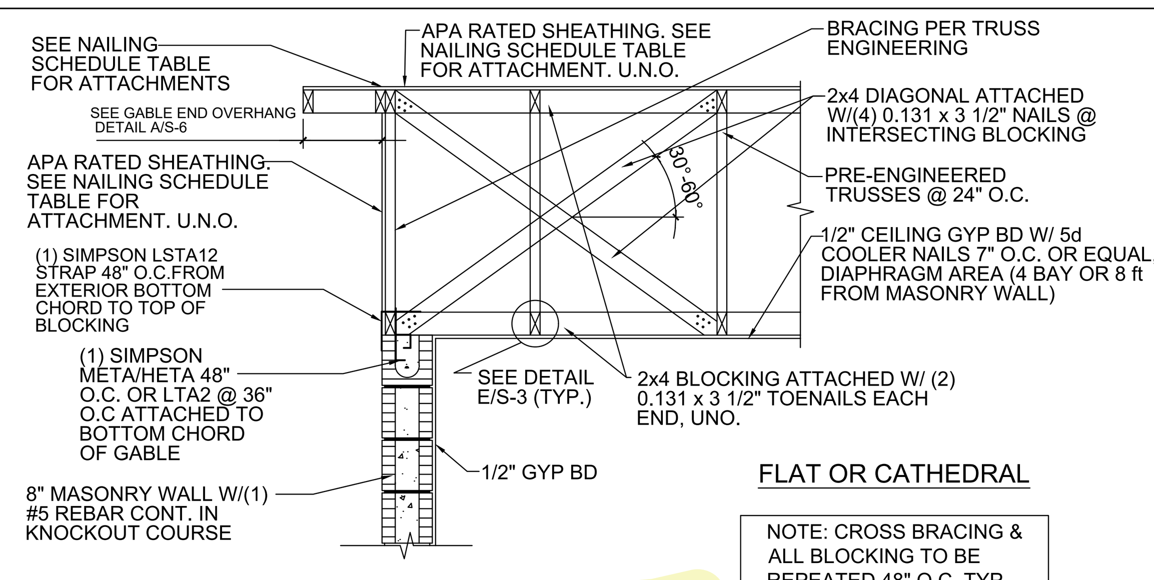

G S-3 TYP. Masonry Gable End
SCALE: NTS

NOTE: FOR GABLE ENDS LESS THAN 4'-0" IN HEIGHT, FOLLOW TYPICAL DETAIL C/S-3.

NOTE:
1. SEE TRUSS MANUFACTURER'S TRUSS ENGINEERING CUT SHEETS FOR ADDITIONAL PERMANENT BRACING THAT MY BE REQUIRED.
2. "T" BRACING MAY BE USED IN PLACE OF PERMANENT BRACING PROVIDED IT EXTENDS OVER @ LEAST 90% OF THE WEB.

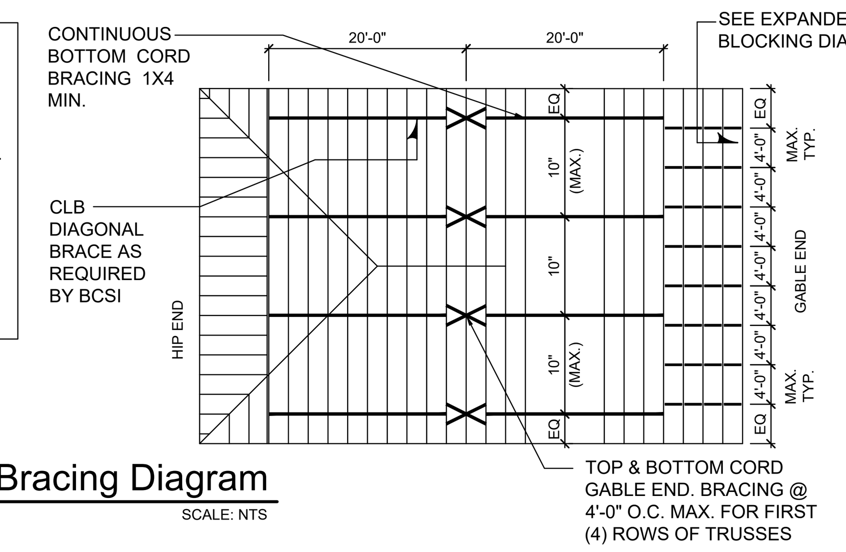

R S-3 Gable & Clg. Bracing Diagram
SCALE: NTS

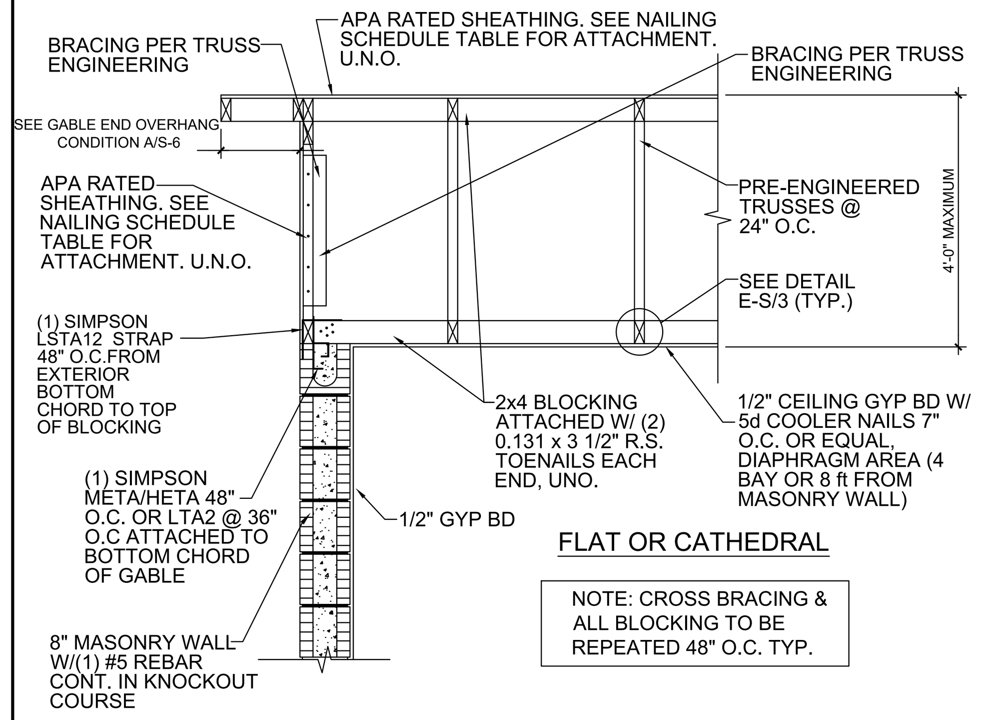

C S-3 Gable Section - For Gable Less Than 4'-0" High
SCALE: NTS

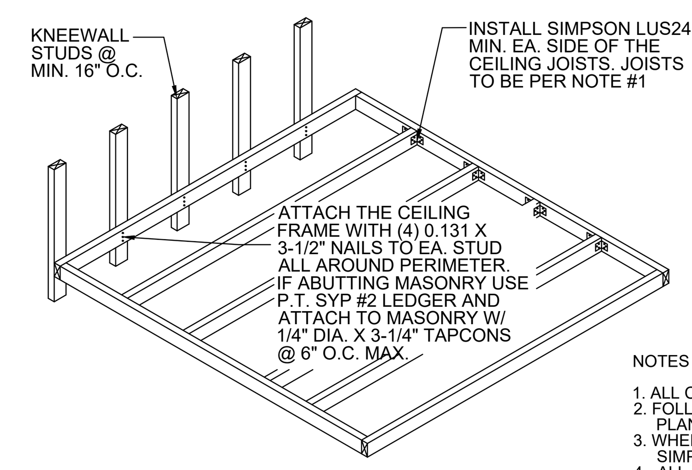

ALL RAFTERS SHALL BE #2 SOUTHERN YELLOW PINE @ 24" O.C. MAX. SECTION SIZE SHALL BE DETERMINED ACCORDING TO THE LENGTH OF SPAN AS FOLLOWS:

UP TO 4'-0"	2X4
4'-0" TO 8'-0"	2X6
8'-0" TO 12'-0"	2X8
12'-0" TO 15'-0"	2X10
15'-0" TO 18'-0"	2X12

NOTES :
1. ALL CEILING FRAME TO BE AS PER TABLE
2. FOLLOW NAILING PATTERN FROM THE APPROVED PLANS FOR SHEATHING ATTACHMENT.
3. WHEN INSTALLING SIMPSON PRODUCTS REFER TO SIMPSON'S INSTRUCTIONS & SPECIFICATIONS.
4. ALL LEDGERS TO BE 2X SYP #2 AND SAME DEPTH AS RAFTERS (PT AT MASONRY CONTACT).

M S-3 Typ. Frame Down Clg. @ Entry
SCALE: NTS

WHEN MTS/HTS TWIST STRAP IS ATTACHED DIRECTLY TO STUD, CONNECT STUD TO DBL. TOP PLATE w/SP2 OR SDWC SCREWS.

AT GIRDER LOCATIONS, IT IS ACCEPTABLE TO INSTALL ADDITIONAL 48" VERTICAL 2X4 #2 S.Y.P. BLOCKING MEMBERS TO THE UPPER SECTION OF THE STUD PACK, FLUSH TO THE UNDERSIDE OF THE DBL. TOP PLATE, IN ORDER TO INSTALL THE TWIST STRAP, BLOCKING SHALL BE ATTACHED WITH 0.131" X 3-1/2" NAILS @ 3" O.C. STAGGERED.

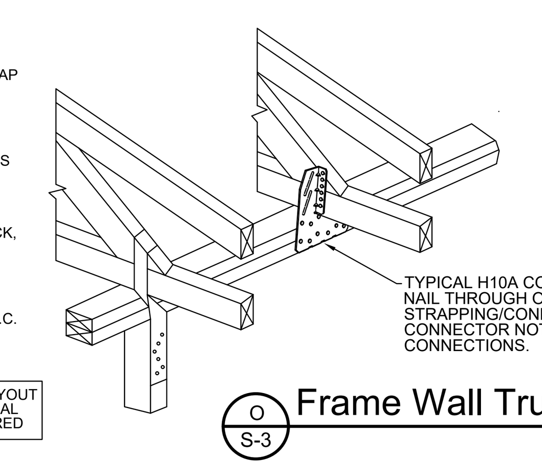

NOTE: SEE TRUSS LAYOUT FOR ANY ADDITIONAL STRAPPING REQUIRED

O S-3 Frame Wall Truss Connection Detail
SCALE: NTS

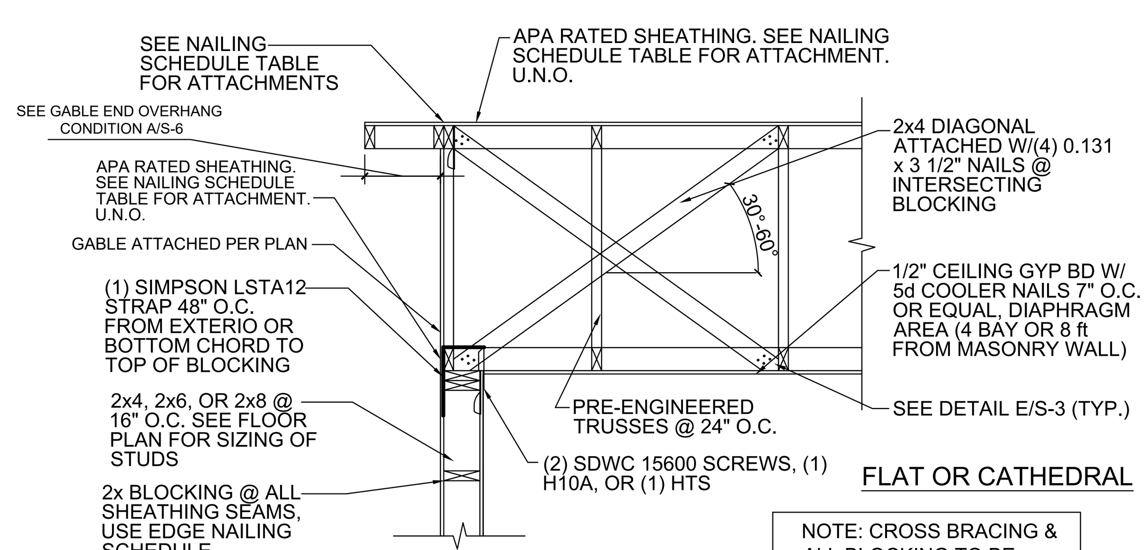

H S-3 TYP. Frame Wall Gable End
SCALE: NTS

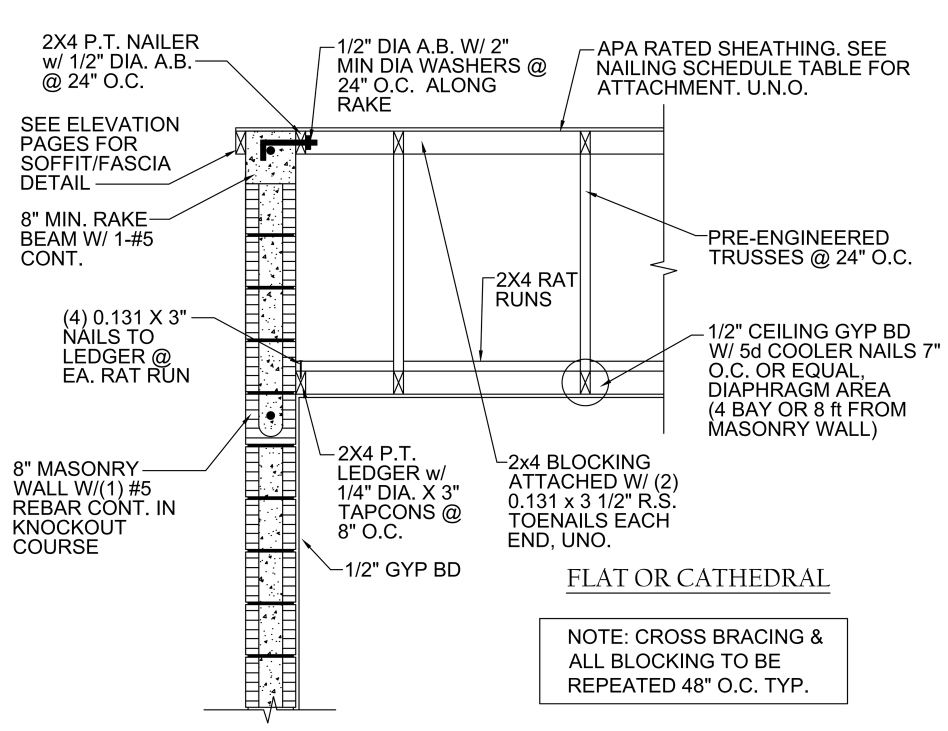

D S-3 Raked Masonry Gable Section
SCALE: NTS

NOTE: THREE OR MORE REPEATED IDENTICAL TRUSSES SHALL HAVE DIAGONAL BRACES. (AS REQUIRED BY BCSI)

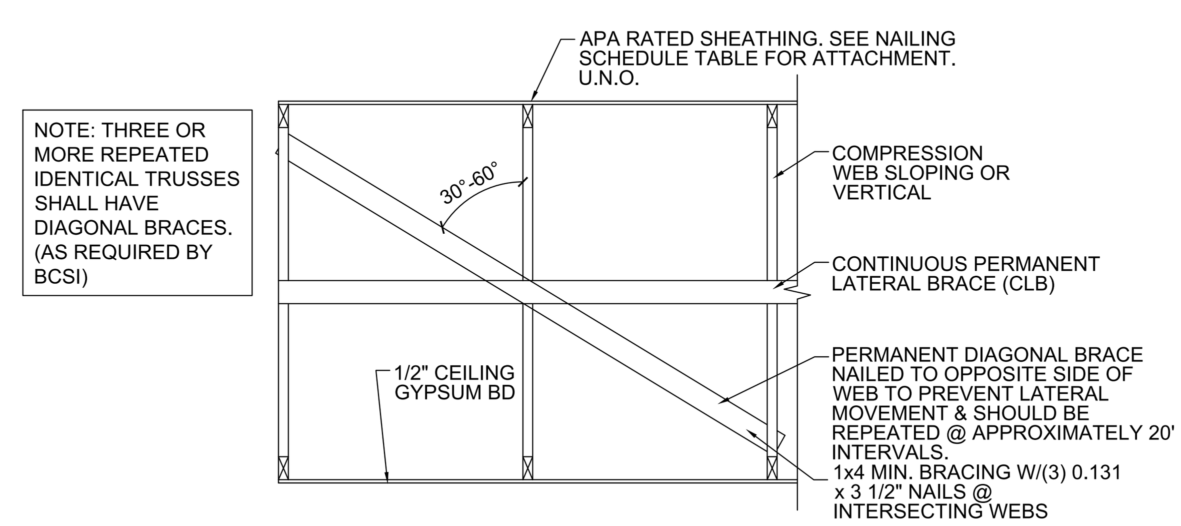

I S-3 CLB Diagonal Brace @ 20' Max. Intervals Detail
SCALE: NTS

UNBRACED FRAME WALL HEIGHT	PLAN ULTIMATE DESIGN WIND SPEED				
	<= 142 MPH	<= 145 MPH	<= 150 MPH	<= 160 MPH	<= 170 MPH
0'-0" - 8'-0"	2X4 #2 SYP @ 16" O.C.	2X4 #2 SYP @ 16" O.C.	2X4 #2 SYP @ 16" O.C.	2X4 #2 SYP @ 16" O.C. **(X) OR (A)**	2X4 #2 SYP @ 16" O.C. & **(A)**
8'-1" - 8'-8"	2X4 #2 SYP @ 16" O.C.	2X4 #2 SYP @ 16" O.C. & **(X) OR (A)**	2X4 #2 SYP @ 16" O.C. & **(X) OR (A)**	2X4 #2 SYP @ 16" O.C. & **(A)**	2X6 #2 SYP @ 16" O.C. **OR** 2X4 #2 SYP @ 12" O.C. & **(B)**
8'-9" - 9'-0"	2X4 #2 SYP @ 16" O.C. & **(X) OR (A)**	2X4 #2 SYP @ 16" O.C. & (X) OR (A)	2X6 #2 SYP @ 16" O.C. **OR** 2X4 #2 SYP @ 12" O.C. & **(B)**	2X6 #2 SYP @ 16" O.C. **OR** 2X4 #2 SYP @ 12" O.C. & **(B)**	2X6 #2 SYP @ 16" O.C. **OR** 2X4 #2 SYP @ 12" O.C. & **(B)**
9'-1" - 9'-4"	2X4 #2 SYP @ 16" O.C. & **(A)**	2X6 #2 SYP @ 16" O.C. **OR** 2X4 #2 SYP @ 12" O.C. & **(B)**	2X6 #2 SYP @ 16" O.C. **OR** 2X4 #2 SYP @ 12" O.C. & **(B)**	2X6 #2 SYP @ 16" O.C. **OR** 2X4 #2 SYP @ 12" O.C. & **(B)**	2X6 #2 SYP @ 16" O.C. **OR** 2X4 #2 SYP DBL STUD @ 16" O.C. & **(C)**
9'-5" - 10'-0"	2X6 #2 SYP @ 16" O.C. **OR** 2X4 #2 SYP STUD @ 12" O.C. & **(B)**	2X6 #2 SYP @ 16" O.C. **OR** 2X4 #2 SYP DBL STUD @ 16" O.C. & **(C)**	2X6 #2 SYP @ 16" O.C. **OR** 2X4 #2 SYP DBL STUD @ 16" O.C. & **(C)**	2X6 #2 SYP @ 16" O.C. **OR** 2X4 #2 SYP DBL STUD @ 16" O.C. & **(C)**	2X6 #2 SYP @ 16" O.C. **OR** 2X4 #2 SYP DBL STUD @ 12" O.C. **& (X)**
10'-1" - 12'-0"	2X6 #2 SYP @ 16" O.C.	2X6 #2 SYP @ 16" O.C.	2X6 #2 SYP @ 16" O.C.	2X8 #2 SYP @16" O.C. **OR** 2X6 #2 SYP @ 16" O.C. & **(A)**	2X8 #2 SYP @16" O.C. **OR** 2X6 #2 SYP @ 16" O.C. & **(A)**

(X) - INDICATES W/IN 4FT OF EACH EXTERIOR CORNER IN EACH DIRECTION, WALL SHEATHING TO BE NAILED @ 3" O.C. MAX. NAIL SPACING W/IN THE FIELD.
(A) - INDICATES W/IN 4FT OF EACH EXTERIOR CORNER IN EACH DIRECTION, STUDS ARE TO BE INSTALLED @ 12" O.C. OR DOUBLE STUDS @ 16" O.C.
(B) - INDICATES W/IN 4FT OF EACH EXTERIOR CORNER IN EACH DIRECTION, STUDS ARE TO BE INSTALLED DOUBLE STUDS @ 16" O.C.
(C) - INDICATES W/IN 4FT OF EACH EXTERIOR CORNER IN EACH DIRECTION, STUDS ARE TO BE INSTALLED DOUBLE STUDS @ 12" O.C.

NOTE 1: IT IS ACCEPTABLE TO SUBSTITUTE A LARGER WIDTH STUD FOR ANY STUD SIZE INDICATED ABOVE AT THE SAME STUD SPACING AS INDICATED.
NOTE 2: THIS CHART MAY ONLY BE APPLIED TO EXPOSURE B & C CONDITIONS. FOR EXPOSURE D CONDITIONS, SEE FLOOR PLAN.
NOTE 3: SPECIFIC NOTATION ON THE FLOOR PLAN SHALL CONTROL OVER THIS CHART.

N S-3 Exterior Frame Wall Table
SCALE: NTS

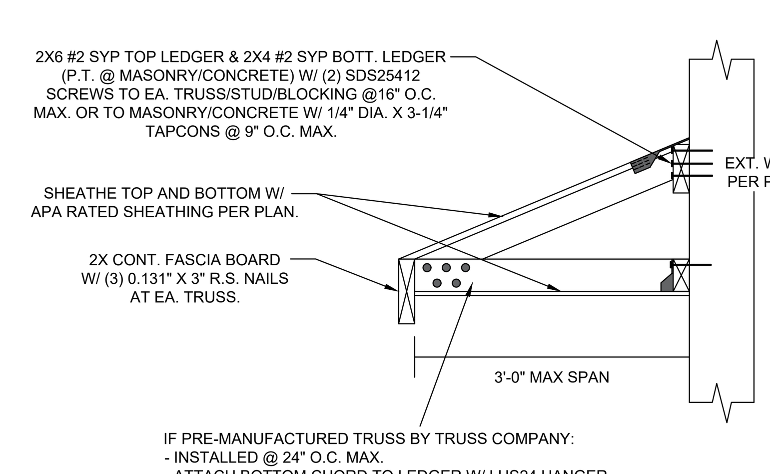

IF PRE-MANUFACTURED TRUSS BY TRUSS COMPANY:
- INSTALLED @ 24" O.C. MAX.
- ATTACH BOTTOM CHORD TO LEDGER W/ LUS24 HANGER.
- ATTACH TOP CHORD TO LEDGER W/ (3) 0.131" X 3-1/2" R.S. TOENAILS AND (1) H3 HORIZONTALLY AT TOP EDGE.

IF CONVENTIONAL FRAMED IN FIELD:
- INSTALL PER ATTACHMENT CRITERIA ABOVE FOR PRE-MANUFACTURED TRUSSES.
- ATTACH 2X6 #2 SYP TOP CHORD TO 2X4 #2 SYP BOTTOM CHORD W/ (5) 0.131" X 3" R.S. NAILS.

S S-3 Typ.Shed Roof Detail
SCALE: NTS

NOTE:
CONTRACTOR TO VERIFY ALL DIMENSIONS IN FIELD AND REPORT ANY DISCREPANCIES TO ENGINEER PRIOR TO STARTING ANY WORK.

NOTE:
CONTRACTOR MUST REVIEW ALL NOTES, DETAILS, CODES & STANDARDS WITHIN THE CONSTRUCTION DOCUMENTS AND APPLY WHERE APPLICABLE. IF CLARIFICATION IS REQUIRED, CONTACT OUR OFFICE PRIOR TO CONSTRUCTION.

THESE PLANS ARE PROPERTY OF VORTEX ENGINEERING, LLC., AND SHALL BE RETURNED UPON COMPLETION OF THE PROJECT. USE OR COPY IS PERMITTED BY CONTRACT ONLY. ANY CHANGES TO THESE PLANS, REGARDLESS OF HOW MINOR, WITHOUT WRITTEN APPROVAL OF VORTEX ENGINEERING, LLC, OR ANY CONSTRUCTION EXECUTED FROM THESE PLANS WITHOUT THE EXPRESS APPROVAL OF VORTEX ENGINEERING, LLC SHALL AUTOMATICALLY RENDER VORTEX ENGINEERING, LLC. HARMLESS TO ANY LIABILITY, CLAIMS, SUITS, OR LITIGATION BY ANY INTERESTED SPECIFICATIONS ACCOMPNY THESE PLANS, THEY SHOULD READ CAREFULLY FOR ADDITIONAL CONDITIONS.

REVISIONS	BY

I HEREBY CERTIFY THAT I HAVE REVIEWED THE ATTACHED DESIGN, AND FIND IT TO BE IN COMPLIANCE WITH SECTION R301 OF THE FLORIDA BUILDING CODE, RESIDENTIAL (8TH EDITION).

THE ENGINEER HAS NOT REVIEWED THE PRE-ENGINEERED TRUSS MANUF. LAYOUT TO DETERMINE ANY LOAD BEARING CONDITIONS AND RESERVES THE RIGHT TO MAKE ANY CHANGES AFTER TRUSS LOAD INFORMATION IS SUPPLIED TO THE ENGINEER.

SEALED FOR STRUCTURE ONLY

Asbed A. Avedikian, P.E.
FL REG # 86623

Vortex Engineering, LLC.
7001 Temple Terrace Highway
Tampa, Florida 33637
1-877-6VORTEX (1-877-686-7839
COA 28035

Andrew J. Meisheid, P.E.
FL REG # 83217

STRUCTURAL DETAILS
FBC 8th ED.

DATE	
SCALE	N.T.S.
DRAWN	MK/PDK/JRW
JOB	-

Sheet content:
Structural Details

NOTE:
DETAILS SHOWN ARE TYPICAL DETAILS THAT SHALL BE APPLIED WHERE CONDITION OCCURS ON THE STRUCTURE, UNLESS NOTED OTHERWISE WITHIN THE PLAN SET.

Sheet number:
S3

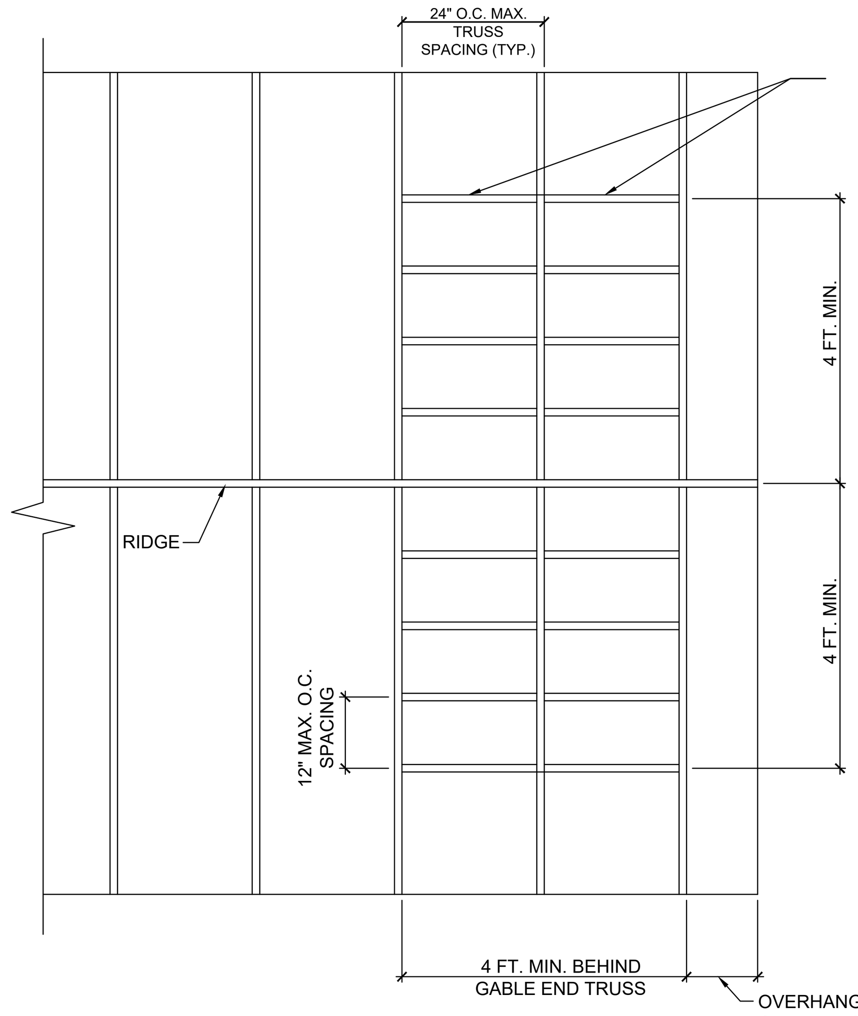

GABLE END TRUSS RIDGE BLOCKING

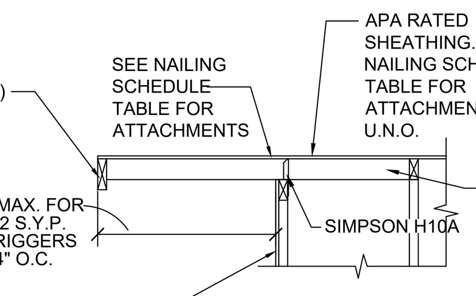

NOTE: WITHIN 4 FT OF RIDGE, SPACE OUTRIGGERS @ 12" O.C.

A.3 36" MAX. O.H. DETAIL
GABLE END OVERHANG OVER 16"

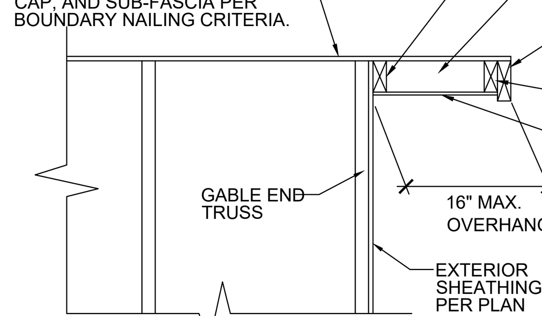

NOTE: OVERHANGS OVER 16" SHALL BE CONSTRUCTED W/ A DROPPED GABLE END TRUSS AND OUTRIGGERS.

A.2 16" MAX. O.H. DETAIL
GABLE END OVERHANG UP TO 16"

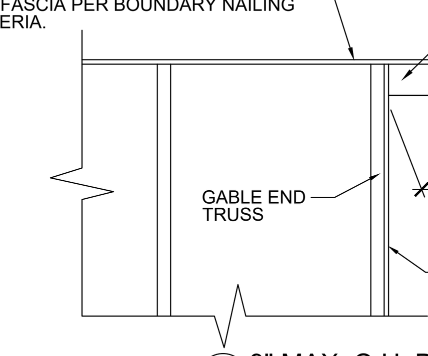

NOTE: OVERHANGS OVER 16" SHALL BE CONSTRUCTED W/ A DROPPED GABLE END TRUSS AND OUTRIGGERS.

A.1 9" MAX. O.H. DETAIL
GABLE END OVERHANG UP TO 9"

A / S-6 Typical Overhang & Ridge Blocking Detail
SCALE: NTS

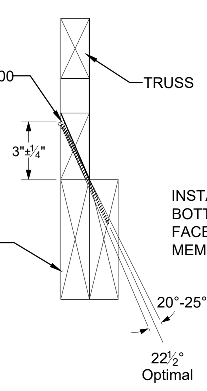

C / S-6 SDWC Screw Truss to Beam Detail
SCALE: NTS

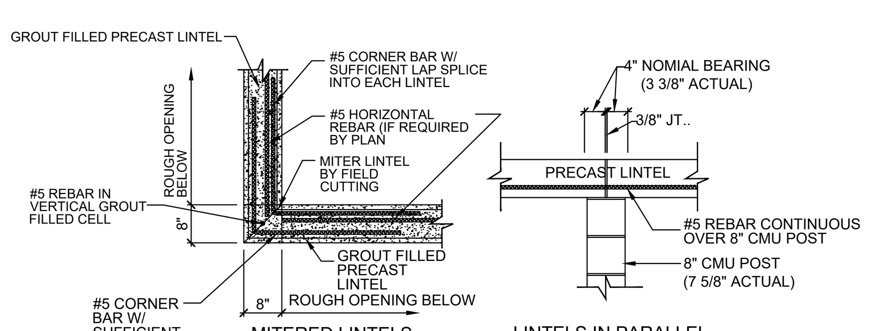

L / S-6 90 DegreeLintel Detail
SCALE: NTS

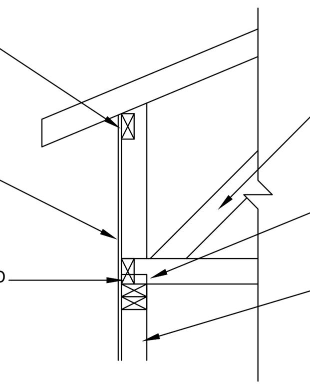

H / S-6 Typ. Blocking @ Truss Heel
SCALE: NTS

* PIPE PENETRATION AND FOOTING DEPTH SHALL BE ADJUSTED AS NECESSARY TO MAINTAIN 3" REBAR COVERAGE AND AT MINIMUM THE FOUNDATION SIZE ON THE FND PLAN

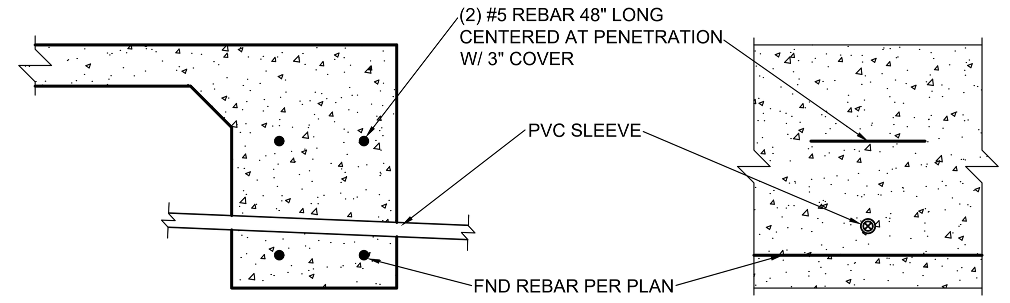

F.1 / S-6 Fnd. Penetration at Exterior Mono
SCALE: NTS

* PIPE PENETRATION SHALL NOT PENETRATE THE STEMWALL FOOTING.

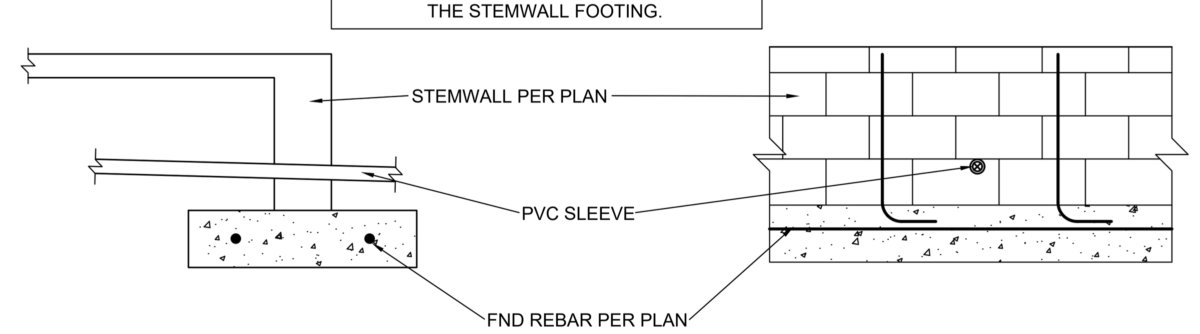

F.2 / S-6 Fnd. Penetration at Stemwall
SCALE: NTS

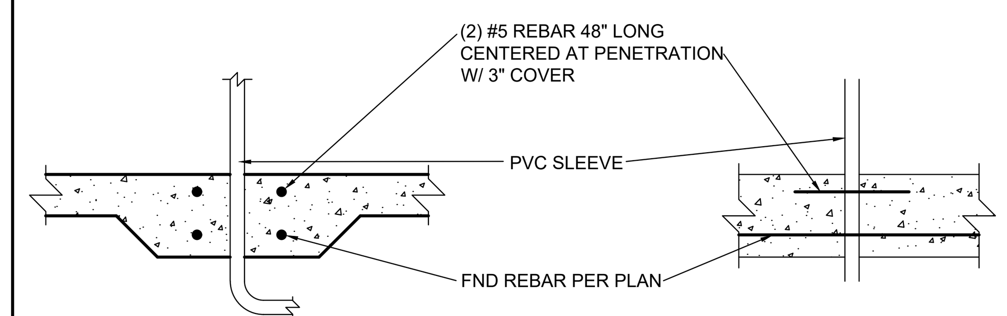

* PIPE PENETRATION AND FOOTING DEPTH SHALL BE ADJUSTED AS NECESSARY TO MAINTAIN 3" REBAR COVERAGE AND AT MINIMUM THE FOUNDATION SIZE ON THE FND PLAN

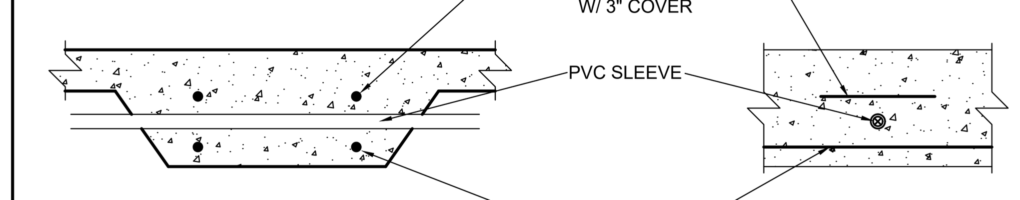

F.3 / S-6 Fnd. Penetration at Interior Mono
SCALE: NTS

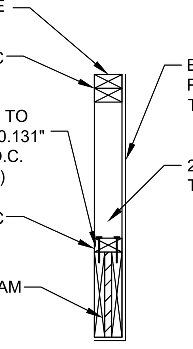

KNEEWALL ABOVE BEAM @ ENTRY

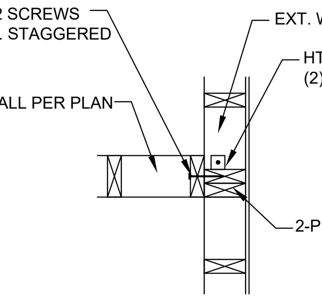

INT. TO EXT. BRG. FRAME WALL CONNECTION

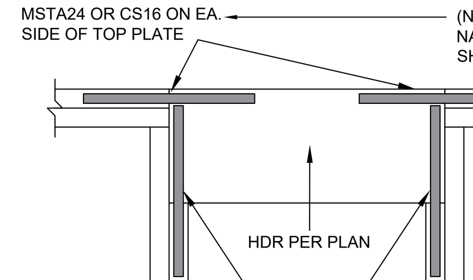

HEADER W/OUT DBL TOP PLATE

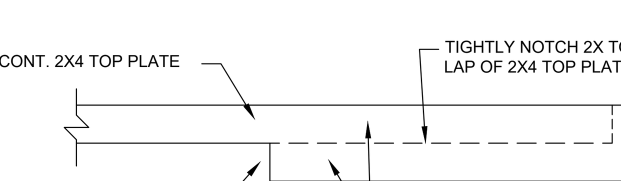

CHANGE IN FRAME WALL WIDTH

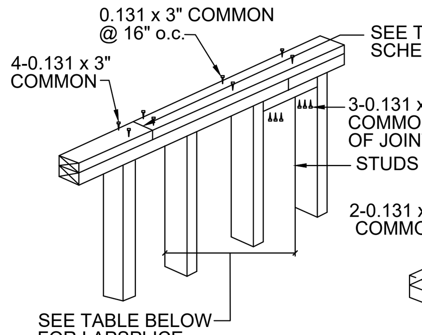

TOP PLATE FASTENERS

TOP PLATE FASTENER SCHEDULE (EXTERIOR WALL)		
LAPSPLICE	NAILING @ SPLICE	ALL OTHER NAILING
36"	2-ROWS 0.131 x 3" @ 3" O/C	0.131 x 3" @ 8" O/C

TOP PLATE FASTENER SCHEDULE (INTERIOR WALL)		
LAPSPLICE	NAILING @ SPLICE	ALL OTHER NAILING
24"	2-ROWS 0.131 x 3" @ 6" O/C	0.131 x 3" @ 8" O/C

IN LOCATIONS WHERE A PIPE PENETRATES THE TOP PLATE OF A BEARING WALL, USE THE FOLLOWING PLATES:
- PSPN58Z IN LOCATIONS WHERE A LAP SPLICE IS OVER 16" AWAY.
- PSPN516Z IN LOCATIONS WHERE A LAP SPLICE IS WITHIN 16"

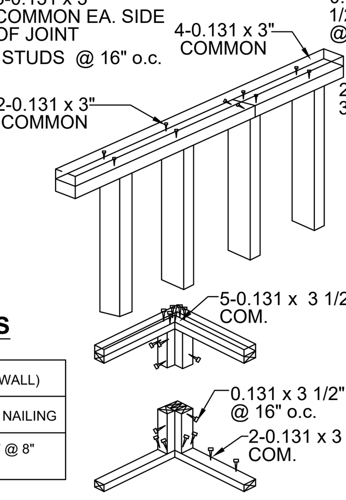

4 STUD CORNER

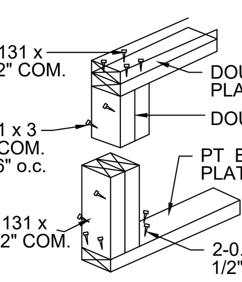

DOUBLE STUD CONDITION

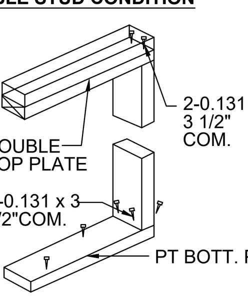

SINGLE STUD CONDITION

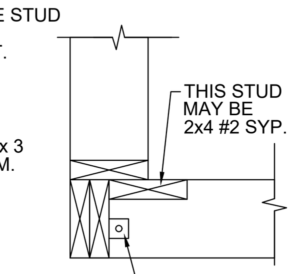

2x6 MIN. 4 STUD CORNER CONIFG.

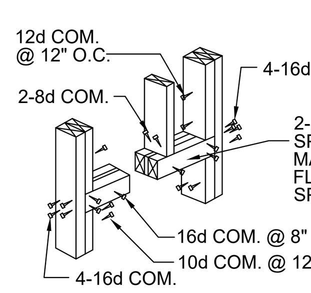

INT. HEADER (NON-BEARING)

UNLESS NOTED OTHERWISE, AT A MINIMUM ALL UNSPECIFIED FRAME TO FRAME CONNECTIONS SHALL CONSIST OF (3) 0.131"X3-1/2" END NAILS OR TOENAILS.

*A SIMPSON MSTCM 60 MAY BE SUBSTITUTED FOR AN HTT4 WHERE LOCATION ALIGNS WITH A FILLED CELL.

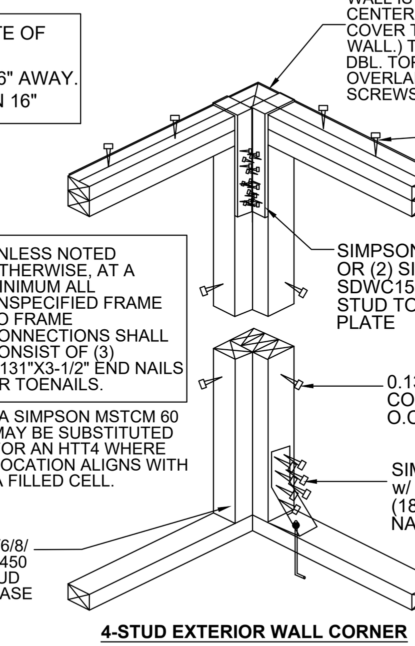

WHEN 4-STUD CORNER OCCURS ON TOP OF GIRDER OR FRAME, ATTACH w/ (2) SIMPSON MSTA36 STRAPS.

4-STUD EXTERIOR WALL CORNER

(APPLIES TO ALL EXTERIOR WALL CORNERS, U.N.O.)

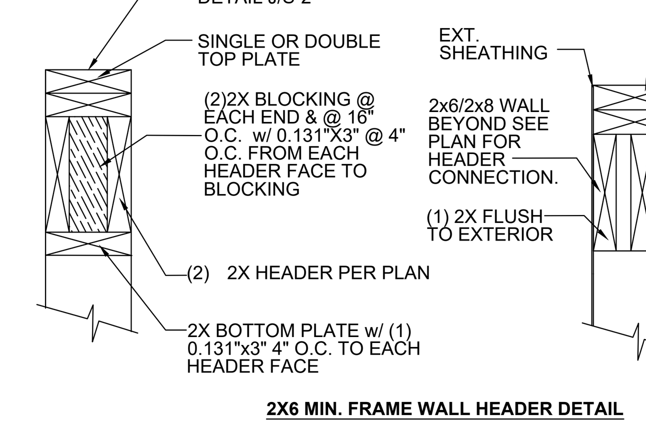

2X6 MIN. FRAME WALL HEADER DETAIL

* SEE DETAIL J/S-2 FOR ADDITIONAL STRAPPING INFORMATION

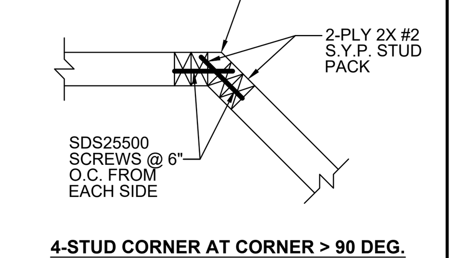

4-STUD CORNER AT CORNER > 90 DEG.

* ALL OTHER 4-STUD CONER STRAPPING AND ANCHORS SHALL APPLY

G / S-6 General Wood Attachment Details
SCALE: NTS

NOTE:
CONTRACTOR TO VERIFY ALL DIMENSIONS IN FIELD AND REPORT ANY DISCREPANCIES TO ENGINEER PRIOR TO STARTING ANY WORK.

NOTE:
CONTRACTOR MUST REVIEW ALL NOTES, DETAILS, CODES & STANDARDS WITHIN THE CONSTRUCTION DOCUMENTS AND APPLY WHERE APPLICABLE. IF CLARIFICATION IS REQUIRED, CONTACT OUR OFFICE PRIOR TO CONSTRUCTION.

THESE PLANS ARE PROPERTY OF VORTEX ENGINEERING, LLC., AND SHALL BE RETURNED UPON COMPLETION OF THE PROJECT. USE OR COPY IS PERMITTED BY CONTRACT ONLY. ANY CHANGES TO THESE PLANS, REGARDLESS OF HOW MINOR, WITHOUT WRITTEN APPROVAL OF VORTEX ENGINEERING, LLC, OR ANY CONSTRUCTION EXECUTED FROM THESE PLANS WITHOUT THE EXPRESS APPROVAL OF VORTEX ENGINEERING, LLC SHALL AUTOMATICALLY RENDER VORTEX ENGINEERING, LLC. HARMLESS TO ANY LIABILITY, CLAIMS, SUITS, OR LITIGATION BY ANY INTERESTED SPECIFICATIONS ACCOMPNY THESE PLANS, THEY SHOULD READ CAREFULLY FOR ADDITIONAL CONDITIONS.

REVISIONS	BY

I HEREBY CERTIFY THAT I HAVE REVIEWED THE ATTACHED DESIGN, AND FIND IT TO BE IN COMPLIANCE WITH SECTION R301 OF THE FLORIDA BUILDING CODE, RESIDENTIAL (8TH EDITION).

THE ENGINEER HAS NOT REVIEWED THE PRE-ENGINEERED TRUSS MANUF. LAYOUT TO DETERMINE ANY LOAD BEARING CONDITIONS AND RESERVES THE RIGHT TO MAKE ANY CHANGES AFTER TRUSS LOAD INFORMATION IS SUPPLIED TO THE ENGINEER.

SEALED FOR STRUCTURE ONLY

Asbed A. Avedikian, P.E.
FL REG # 86623

Vortex Engineering, LLC.
7001 Temple Terrace Highway
Tampa, Florida 33637
1-877-6VORTEX (1-877-686-7839
COA 28035

Andrew J. Meisheid, P.E.
FL REG # 83217

STRUCTURAL DETAILS

FBC 8th ED.

DATE	
SCALE	N.T.S.
DRAWN	MK/PDK/JRW
JOB	-

Sheet content:

Structural Details

NOTE:
DETAILS SHOWN ARE TYPICAL DETAILS THAT SHALL BE APPLIED WHERE CONDITION OCCURS ON THE STRUCTURE, UNLESS NOTED OTHERWISE WITHIN THE PLAN SET.

Sheet number:

S6

GENERAL NOTES:

PRE-ENGINEERED WOOD PRODUCTS

- ALL PRE-ENGINEERED WOOD PRODUCTS SHALL BE VERIFIED BY TRUSS MANUFACTURER. TRUSS MANUFACTURER SHALL HAVE THE AUTHORITY TO MAKE SUBSTITUTIONS FOR PRODUCTS SPECIFIED ON THE PLANS DUE TO AVAILABILITY OR ECONOMICS. CHANGES SPECIFIED BY THE TRUSS MANUFACTURER SHALL CONTROL. CHANGES MADE AFTER TRUSS ENGINEERING HAS BEEN PROVIDED TO ENGINEER OF RECORD, MUST BE APPROVED BY THE ENGINEER OF RECORD.
- ALL PRE-ENGINEERED WOOD PRODUCTS ARE THE RESPONSIBILITY OF THE TRUSS MANUFACTURER. THIS INCLUDES THE DESIGN OF ANY PRE-ENGINEERED WOOD BEAM THAT MAY BE REQUIRED WITHIN A TRUSS LAYOUT WHEN A PRE-ENGINEERED WOOD TRUSS GIRDER DESIGN IS NOT A VIABLE OPTION. THE TRUSS ENGINEER IS A DELEGATED ENGINEER FOR THIS PROJECT & AS SUCH, IS RESPONSIBLE FOR THE VALIDITY OF THE COMPONENTS PROVIDED. FRAMING LAYOUTS SHOWN MAY BE CHANGED BY THE TRUSS MANUFACTURER. THE DELEGATED ENGINEER IS RESPONSIBLE FOR PROVIDING A FINAL SEALED SET OF ALL CALCULATIONS & LAYOUTS FOR THIS PROJECT TO THE ENGINEER OF RECORD FOR REVIEW PRIOR TO MANUFACTURE OF SAID COMPONENTS. WHEN RECEIVED, ENGINEER OF RECORD SHALL REVIEW SAID TRUSS PACKAGE FOR ITS STRUCTURAL COMPLIANCE WITH THE PLAN SET, BUT IS NOT RESPONSIBLE FOR THE REVIEW OF THE ARCHITECTURAL INTENT OR CONSTRUCTIBILITY (THE FOLLOWING ITEMS INCLUDE BUT ARE NOT LIMITED TO: DIMENSIONS, SLOPES, HEALS, TRAYS, MECHANICAL SYSTEM ACCESS, ETC.). THESE ITEMS SHALL BE REVIEWED BY THE PLAN DESIGNER AND THE GENERAL CONTRACTOR. UNLESS NOTED OTHERWISE, THE ENGINEER OF RECORD HAS NOT REVIEWED THE PRE-ENGINEERED TRUSS MANUFACTURER'S COMPONENTS @ THIS TIME & RESERVES THE RIGHT TO MAKE ANY CHANGES AFTER SUCH INFORMATION HAS BEEN PROVIDED FOR REVIEW. CONTRACTOR, AS PROJECT COORDINATOR, SHALL BE RESPONSIBLE FOR INSURING INFORMATION REQUESTED ABOVE HAS BEEN SUBMITTED TO ENGINEER OF RECORD IN A TIMELY MANNER WHEN AVAILABLE.
- ALL PRE-ENGINEERED TRUSSES TO BE DESIGNED USING THE MOST RECENT TPI CRITERIA. TRUSSES TO BE HANDLED & INSTALLED USING MOST RECENT BCSI RECOMMENDATIONS. TEMPORARY & PERMANENT BRACING SHALL BE PER MOST RECENT BCSI RECOMMENDATIONS UNLESS NOTED OTHERWISE, OR MORE STRINGENT CODE REQUIREMENTS APPLY. TRUSS ENGINEER IS RESPONSIBLE FOR INDICATING ALL TRUSS-TO-TRUSS CONNECTORS. ALL COMPONENTS TO BE DESIGNED FOR BOTH GRAVITY & UPLIFT LOAD CASES, INCLUDING BEAM COMPONENTS.
- NOTE: UPON REVIEW OF THE SIGNED AND SEALED TRUSS PACKAGE, ENGINEER OF RECORD WILL PROVIDE A REVIEW LETTER INDICATING ANY CHANGE IN FOUNDATION DESIGN, CONNECTOR STRAPPING AND/OR BEAM/COLUMN SUPPORT, BASED ON SAID REVIEW. CONSTRUCTION COMMENCING PRIOR TO ENGINEER'S REVIEW, IS AT THE CONTRACTOR'S OWN RISK, AND IS SUBJECT TO MODIFICATION/REPAIR BASED ON A TRUSS REVIEW LETTER.
- ALL POTENTIAL FIELD TRUSS REPAIRS/MODIFICATIONS SHALL BE PROVIDED BY THE TRUSS MANUFACTURER.
- TRUSS CONNECTIONS SPECIFIED BY THE TRUSS MANUFACTURER SHALL CONTROL.
- THE ENGINEERING DETAILS SHOWN HEREIN SHALL CONTROL IF THERE IS A DIFFERENCE OF CONNECTOR SPECIFICATIONS IN ANY OTHER PART OR PORTION OF THE PLAN SET.

PRECAST CONCRETE COMPONENTS

- THE USE OF PRE-CAST & PRE-STRESSED CONCRETE COMPONENTS IS ANTICIPATED IN THIS DESIGN, NAMELY LINTELS AND WIND RESISTANT SILLS SHALL BE USED THROUGHOUT UNLESS SPECIFICALLY STATED OTHERWISE. ALL COMPONENTS SHALL BE INSTALLED PER MANUFACTURER'S SPECIFICATIONS. PRE-CAST LINTELS HAVE BEEN REVIEWED & PLACED BASED ON THE DESIGN ALLOWABLE LOAD INFORMATION PROVIDED BY CASTCRETE. USE OF CASTCRETE LINTELS AND SILLS OR A STRUCTURAL EQUIVALENT BY ANOTHER MANUFACTURER IS REQUIRED.

MANUFACTURED PRODUCTS

- ALL MANUFACTURED PRODUCTS SUCH AS: ROOFING, WINDOWS, DOORS, ETC. ARE SHOWN HEREIN FOR ILLUSTRATION PURPOSES ONLY.
- THE INFORMATION SHOWN IS THE RESPONSIBILITY OF THE MANUFACTURER. THE MANUFACTURER IS RESPONSIBLE FOR THE VALIDITY OF THE COMPONENTS PROVIDED. ATTACHMENT INFORMATION GIVEN BY THE MANUFACTURER IS PROVIDED HEREIN. CONTRACTOR, AS PROJECT COORDINATOR, SHALL BE RESPONSIBLE FOR INSURING THAT THE APPROPRIATE PRODUCT/COMPONENT IS USED & THAT IT HAS BEEN INSTALLED PER MANUFACTURER'S SPECIFICATIONS SUCH THAT IT WILL WITHSTAND THE COMPONENTS & CLADDING PRESSURES REQUIRED BY THE SEALED PLANS.
  - NOTE: ENGINEER OF RECORD HAS NOT REVIEWED THIS INFORMATION FOR APPLICABILITY OR AS A FORM OF PRODUCT APPROVAL OR ENDORSEMENT. IT IS THE CONTRACTOR'S RESPONSIBILITY TO PROVIDE/INSTALL PRODUCTS THAT MEET THE DESIGN CRITERIA OF THE PLAN SET.
- ALL PRODUCTS SHALL BE INSTALLED PER MANUFACTURER'S SPECIFICATIONS UNLESS NOTED OTHERWISE.

FRAMING, DRYWALL & TRIM

- ALL WALLS & KNEE WALLS SURROUNDING STAIRWELLS ARE TO BE FRAMED @ 16" O.C. TO PROTECT FROM FALLING HAZARD.
- ALL KNEE WALLS WHICH ALSO ACT AS GUARDRAILS SURROUNDING STAIR, BALCONY, OR VOLUME AREAS SHALL BE ANCHORED SUFFICIENT TO RESIST THE LATERAL AND/OR VERTICAL LOADS REQUIRED BY CODE FOR FALL PROTECTION. THE FOLLOWING SUGGESTED ATTACHMENTS ARE INTENDED TO PROVIDE A BASE GUIDELINE IN THE ABSENCE OF ANY OTHER DIRECTIVE AND SHALL APPLY WHERE AN ALTERNATIVE "SYSTEM" IS NOT BEING USED, OR U.N.O.
  - AT LOCATIONS WHERE THE FLOOR SYSTEM BELOW THE GUARDRAIL IS PERPENDICULAR, AT 48" O.C. MAX. (1) 2X4 STUD WITHIN THE KNEE WALL SHALL PENETRATE THE BOTTOM PLATE OF THE KNEE WALL AND FLOOR SHEATHING AND SHALL "SISTER" ALONGSIDE THE FLOOR TRUSS/JOIST/BEAM AND SHALL NAIL TO THAT FLOOR TRUSS WITH (3) 0.131 X 3-1/2" NAILS AT BOTH THE TOP CHORD AND BOTTOM CHORD, OR IF THE TRUSS HAS A VERTICAL WEB COMPONENT AT THE "SISTERED" LOCATION (6) 0.131 X 3-1/2" NAILS EQUALLY SPACED AND STAGGERED MAY BE USED ALONG THE LENGTH OF THE "SISTERED" STUD INTO THE VERTICAL WEB COMPONENT.
  - AT LOCATIONS WHERE THE FLOOR SYSTEM BELOW THE GUARDRAIL IS PARALLEL TO THE GUARDRAIL, THE BOTTOM PLATE OF THE GUARDRAIL KNEE WALL SHALL BE ATTACHED TO THE PARALLEL FLOOR SUPPORT BELOW WITH (2) ROWS OF SIMPSON SDS25600 SCREWS AT 8" O.C. ALONG THE LENGTH OF THE KNEE WALL. IN ADDITION, THE SIDE OF THE KNEEWALL ADJACENT TO THE OPENING SHALL BE FULLY SHEATHED WITH 7/16" OSB OR EQUAL FROM THE TOP PLATE OF THE KNEEWALL TO THE BOTTOM OF THE FLOOR SUPPORT BELOW, NAILED PER THE "WALL" NAILING PATTERN (SHEATHING MAY BE VERTICALLY ORIENTED), BRIDGING THE HINGE POINT. ON THE NON-OPENING SIDE OF THE KNEEWALL, THE KNEE WALL STUDS SHALL ATTACH TO THE BOTTOM PLATE WITH SIMPSON SP1 CONNECTORS AT EACH STUD.
  - IF A GUARDRAIL/KNEE WALL TERMINATES AT A FULL HEIGHT WALL, A CRIPPLE STUD SHALL BE SISTERED TO THE FULL HEIGHT STUD AND SHALL BE NAILED WITH (6) 0.131 X 3-1/2" NAILS STAGGERED AND EQUALLY SPACED, AND THE DOUBLE TOP PLATE OF THE KNEE WALL SHALL BE NAILED TO THE FULL HEIGHT STUD WITH (4) 0.131 X 3-1/2" TOE NAILS. THIS ATTACHMENT SHALL ALSO APPLY AT ALL CHANGES OF DIRECTION AT THE KNEE WALL.
  - ALL KNEEWALLS THAT ALSO FORM GUARDRAILS SHALL HAVE DOUBLE 2X TOP PLATES, STRUCTURALLY CONTINUOUS.
  - EACH STUD WITHIN THE KNEEWALL SHALL BE ATTACHED TO BOTH THE TOP AND BOTTOM PLATES WITH (3) 0.131 X 3-1/2" TOE NAILS OR EQUAL.
  - UNDERSTANDING THAT THESE ATTACHMENTS AND WALL CONFIGURATIONS MAY VARY GREATLY AND THAT NUMEROUS "SYSTEMS" ARE AVAILABLE IN THE MARKETPLACE TO PROVIDE SUFFICIENT RESISTIVITY FOR THESE LOADS, IT IS NOT THE INTENT OF THIS PROVISION TO LIMIT THE USE OF ALTERNATE ATTACHMENTS.
- FRONT ENTRY & LANAI CEILINGS OPTIONS: PORCH CEILINGS: TEXTURED PAINTED: ½" EXTERIOR GYPSUM SOFFIT BOARD SHALL BE ATTACHED TO ALL FRAMING MEMBERS WITH 2X BLOCKING PROVIDED AT PERIMETER. THE GYPSUM BOARD SHALL BE ATTACHED W/TYPE "W" 1-1/4" DRYWALL SCREWS AT 8" O.C. IN FIELD AND EDGES. MASONRY PLASTER: FLAT 7/16" APA RATED SHEATHING ON UNDERSIDE OF ROOF TRUSSES SHALL BE ATTACHED TO ALL FRAMING MEMBERS WITH 2X BLOCKING PROVIDED AT PERIMETER W/ 0.131" X 2-1/2" R.S. NAILS AT 6" O.C. FIELD AND 4" O.C. EDGES OR 7D SCREW SHANK AT 4" EDGES AND 3" O.C. FIELD. NOTE: 5/8" CDX OR 1X T&G IS ACCEPTABLE FOR SUBSTITUTION.

BRICK & STONE

- BRICK/STONE SHALL BE SELF SUPPORTING. MASON SHALL PROVIDE ANGLE SUPPORT AT OPENINGS SUCH THAT IT SPANS THE OPENING & DOES NOT ADD WEIGHT TO HEADERS. HEADERS PROVIDE LATERAL SUPPORT ONLY.
- AT MASONRY, USE 6"X6"X3/8" STEEL ANGLE W/ 1/2" DIA. X 5" SIMPSON TITEN HD ANCHORS @ 24" O.C. W/ 4" LAP ONTO BRICK SUPPORT ON EITHER SIDE MINIMUM. ANGLE SIZE PER B.I.A. & F.B.C. CRITERIA, OR BY OTHERS.
- AT FRAME, USE 5"X5"X3/8" STEEL ANGLE W/ 3/8" DIA. X 4" LAG SCREWS @ 12" O.C. W/ 4" LAP ONTO BRICK SUPPORT ON EITHER SIDE MINIMUM. ANGLE SIZE PER B.I.A. & F.B.C. CRITERIA, OR BY OTHERS.
- BRICK/STONE TIES, ANGLES SUPPORTS, AESTHETIC FINISHES SHALL BE INSTALLED IN ACCORDANCE WITH THE TMS 402/ACI 530/ASCE 5 AS APPLICABLE.
- VORTEX ENGINEERING, LLC. IS NOT RESPONSIBLE FOR BRICK/STONE INSTALLATION INFORMATION, AS BRICK/STONE DESIGN IS BY OTHERS.
- SECOND FLOOR AREAS NOT IN ALIGNMENT WITH FIRST FLOOR AREAS HAVE BEEN ASSUMED TO REQUIRE BRICK/STONE BEARING ON TRUSS SYSTEM BELOW. TRUSS MANUFACTURER TO INCLUDE ADDITIONAL DEAD LOAD FOR SUCH AREAS, & LIMIT DEFLECTION TO L/600 IN THESE AREAS FOR PURPOSES OF BRICK SUPPORT.
- FOUNDATIONS HAVE BEEN SIZED FOR THE ADDITIONAL DEAD LOAD DUE TO BRICK/STONE.
- BRICK/STONE & ITS SUPPORT EXCEPT AS NOTED IS BY OTHERS. NOTED CRITERIA IS A MINIMUM STANDARD. TIES, FLASHINGS, WEEPS, CONTROL JOINTS, & ALL OTHER BRICK/STONE CRITERIA IS BY OTHERS.
- THE NOTES ABOVE PERTAIN TO CLAY BRICK MASONRY & NATURAL STONE. SIMULATED PRODUCTS & VENEERS SHALL BE INSTALLED PER MANUFACTURER'S SPECIFICATIONS & THEIR FLORIDA PRODUCT APPROVAL OR MIAMI/DADE NOA.

SPECIFICATION FOR LANDINGS STAIR CONSTRUCTION (THE FOLLOWING SHALL APPLY U.N.O.):

- STAIRS SHALL BE DESIGNED PER LOADING CRITERIA WITHIN FBC TABLE R301.5.
  - 40 PSF UNIFORM LIVE LOAD.
  - 300 LB CONCENTRATED LOAD.
  - INDIVIDUAL STAIR TREADS SHALL BE CAPABLE OF SUPPORTING THE UNIFORMLY DISTRIBUTED LIVE LOAD OR A 300-POUND CONCENTRATED LOAD APPLIED ON AN AREA OF 2 INCHES BY 2 INCHES, WHICHEVER PRODUCES THE GREATER STRESSES.
- ALL STAIR AND LANDING LUMBER SHALL BE S.Y.P. #2 OR BETTER.
- CENTER STRINGERS SHALL BE 2-PLY 2X12 OR (1) 2X12 WITH (2) 2X4 RUNNERS ATATCHED PER DETAIL Q/S-3.
- OUTER STRINGERS SHALL BE 2-PLY 2X12 OR (1) 2X12 WITH (1) 2X4 RUNNER ATTACHED PER Q/S-3.
  - OUTER STRINGERS MAY BE 1-PLY 2X12 IF ATATCHED IN LEDGER MANNER, SEE NOTES BELOW.
  - ALL RUNNERS SHALL BE ORIENTED THE SAME AS THE STRINGER AND FLUSH WITH THE BOTTOM EDGE OF STRINGER.
- STRINGER SPACING SHALL BE AS FOLLOWS:
  - FOR 2X12 S.Y.P. #2 TREADS, STRINGER SPACING SHALL BE 24" O.C. MAX.
  - FOR 1X12 S.Y.P. #2 TREADS, STRINGER SPACING SHALL BE 16" O.C. MAX.
  - NOTE: FOR STAIRS WITH NO RISERS, STRINGER SPACING SHALL BE 16" O.C. MAX., REGARDLESS OF TREAD MATERIAL.
- UNSUPPORTED HORIZONTAL STRINGER LENGTH SHALL NOT EXCEED 10 FT, U.N.O. IF LONGER LENGTH REQUIRED, PROVIDE A STRUCTURAL KNEEWALL CONSTRUCTED PER DETAIL B/S-1 USING ¼" DIA. X 3-1/4" TAPCONS AT 8" O.C. IN LIEU OF TITEN HD ANCHORS. TO ATTACH THE BOTTOM PLATE. AN ADDITIONAL FOOTING IS NOT REQUIRED FOR THIS STRUCTURAL KNEEWALL. THE DOUBLE TOP PLATE OF THE KNEEWALL SHALL BE SLOPED TO MATCH THE BOTTOM EDGE OF THE STRINGERS. **DO NOT NOTCH THE BOTTOM EDGE OF ANY STRINGER**. ATTACH EACH STRINGER TO THE KNEEWALL WITH (3) 0.131" X 3-1/2" TOENAILS OR (1) SIMPSON H3 CLIP.
- TREADS SHALL BE ATTACHED TO STRINGERS WITH A MINIMUM OF (4) 16d NAILS. RISERS SHALL BE ATTACHED TO STRINGERS WITH A MINIMUM OF (3) 0.131" X 3-1/2" NAILS. THIS ATTACHMENT CRITERIA IS A STRUCTURAL MINIMUM, AND THERE IS NO OBJECTION TO THE ADDITION OF ANY SCREWS AND/OR GLUE.
- ALL STRINGERS TO ATTACH AT LANDINGS AND UPPER FLOOR LEVELS WITH SIMPSON LSC HANGER.
  - WHEN STRINGERS ATTACH TO OPEN WEB FLOOR TRUSSES, INSTALL A 1-PLY 2X8 LEDGER TO THE FLOOR TRUSSES WITH (4) SDS25412 SCREWS TO EACH FLOOR TRUSS END VERTICAL OR AT 16" O.C. MAX. SPACING TO THE SIDE OF THE FLOOR TRUSS.
- STRINGERS RUNNING PARALLEL TO AND SUPPORTED BY WALL SHALL BE ATTACHED AS FOLLOWS:
  - AT MASONRY/CONCRETE: ATTACH WITH ¼" DIA. X 3-1/4" TAPCONS AT 8" O.C. STAGGERED ALONG THE LENGTH OF THE STRINGER. STRINGER SHALL BE P.T.
  - AT FRAME: ATTACH WITH (4) 0.131" X 3-1/2" NAILS AT EACH STUD MIN. (16" O.C. MAX. SPACING).
  - IF STRINGERS ARE SUPPORTED IN THIS MANNER, THE LSC HANGERS ARE NOT REQUIRED.
- THE BASE OF ALL STRINGERS SHALL BEAR ON A FLAT SURFACE (SLAB OR LANDING) AND SHALL TERMINATE AT A 2X4 FOOT (P.T. AT CONCRETE). ATTACH FOOT AS FOLLOWS:
  - AT CONCRETE: ATTACH WITH ¼" DIA. X 3-1/4" TAPCONS @ 12" O.C.
  - AT FRAME: ATTACH WITH 0.131" X 3-1/2" NAILS @ 8" O.C. TO TRUSS / JOIST / OR BLOCKING BELOW.
  - ATTACH EACH STRINGER TO FOOT WITH (2) 0.131" X 3-1/2" TOENAILS EACH.
- LANDINGS SHALL BE CONSTRUCTED AS FOLLOWS:
  - JOISTS TO BE 2X8 MINIMUM @ 16" O.C. MAX. SPACING, U.N.O.
  - IF LANDING INCLUDES STRINGER SUPPORT IN A BEAM CONFIGURATION, BEAM SHALL BE 2-PLY 2X12 WITH (2) 2X4 SUPPORT COLUMN AT EACH END. ATTACH BEAM TO COLUMN WITH (4) 0.131 X 3-1/2" TOENAILS. TOP OF COLUMN SHALL BE BLOCKED TO NEXT ADJACENT STUD.
    - IF 2-PLY 2X12 BEAM BEARS AT ANOTHER BEAM, LEDGER, OR LARGER STUD PACK, ATTACH WITH A SIMPSON HU/HUC210-2 HANGER
  - IF LANDING IS SUPPORTED BY A KNEEWALL, PROVIDE A 2X8 END JOIST WITH (3) 0.131" X 3-1/2" R.S. END NAILS AT EACH LANDING JOIST & (2) 0.131" X 3-1/2" TOENAILS FROM EACH JOIST TO KNEEWALL TOP PLATE.
  - LEDGERS TO BE 2X8 WITH:
    - AT FRAME: ATTACH WITH (4) 0.131" X 3-1/2" NAILS AT EACH PASSING STUD (16" O.C. MAX.).
    - AT MASONRY/CONCRETE: ATTACH WITH ¼" DIA. X 3-1/4" TAPCONS @ 8" O.C. STAGGERED.
  - ATTACH JOISTS TO LEDGERS OR BEAMS WITH SIMPSON LUS26 HANGERS OR EQUAL (LUS26-2 FOR 2-PLY CONDITONS).
- THE SPECIFICATIONS LISTED ABOVE ARE MINIMUM SPECS. SUBSTITUTIONS OF EQUAL OR BETTER CAPACITY ARE ACCEPTABLE.
- ALL GUARDRAILS AND HANDRAILS ARE BY OTHERS, INCLUDING THEIR ATTACHMENTS. ALL GUARDRAIL & HANDRAIL SYSTEMS MUST MEET OR EXCEED THE REQUIREMENTS OF FBC TABLE R301.5 & SECTION R312. THE MINIMUM LOAD REQUIREMENTS OF TABLE R301.5 ARE AS FOLLOWS:
  - GUARDRAILS & HANDRAILS: CONCENTRATED LOAD OF 200 LBS.
  - GUARD IN-FILL COMPONENTS: CONCENTRATED LOAD OF 50 LBS.
  - SEE FBC TABLE R301.5 FOR ADDITIONAL FOOTNOTES RELATED TO THESE LOADING CONDITIONS.

GENERAL STRUCTURAL NOTES:

1. CODES & REFERENCES

1.1. FLORIDA BUILDING CODE, RESIDENTIAL (FBCR) 8TH EDITION 2023.
1.2. AMERICAN CONCRETE INSTITUTE OF STRUCTURAL CONCRETE (ACI 318).
1.3. BUILDING CODE REQUIREMENTS FOR MASONRY STRUCTURES (TMS 402/ACI 530/ASCE 5).
1.3.1. SPECIFICATION FOR MASONRY STRUCTURES (TMS 602/ACI 530.1/ASCE 6).
1.3.2. THE MASONRY SOCIETY DIRECT DESIGN HANDBOOK FOR MASONRY STRUCTURES (TMS 403).
1.4. AMERICAN SOCIETY OF CIVIL ENGINEERS MINIMUM DESIGN LOADS FOR BUILDINGS & OTHER STRUCTURES (ASCE 7).
1.5. SPECIFICATION FOR THE DESIGN, FABRICATION & ERECTION OF STRUCTURAL STEEL FOR BUILDINGS, LATEST EDITION.
1.6. DESIGN SPECIFICATION FOR LIGHT METAL PLATE CONNECTED WOOD TRUSSES BY THE TRUSS PLATE INSTITUTE (TPI) LATEST EDITION.
1.7. NATIONAL DESIGN SPECIFICATION FOR WOOD CONSTRUCTION (NDS) LATEST EDITION.
1.8. AMERICAN PLYWOOD ASSOCIATION (APA) DESIGN CONSTRUCTION GUIDE LATEST EDITION.

2. DESIGN CRITERIA

2.1. ROOF LOADING:
TOP CHORD LIVE LOAD (TCLL) = 20 PSF
TOP CHORD DEAD LOAD (TCDL) = 7 PSF (SHINGLE/METAL ROOF)
15 PSF (TILE ROOF - IF TILE ROOF ASSEMBLY IS GREATER THAN 15 PSF, CONTACT THE EOR PRIOR TO CONSTRUCTION)
BOTTOM CHORD LIVE LOAD (BCLL) = 10 PSF UNINHABITABLE ATTICS WITHOUT STORAGE (NON-CONCURRENT)
20 PSF UNINHABITABLE ATTICS WITH LIMITED STORAGE
30 PSF HABITABLE ATTICS AND ATTICS SERVED WITH FIXED STAIRS
BOTTOM CHORD DEAD LOAD (BCDL) = 10 PSF
2.2. FLOOR LOADING:
TOP CHORD LIVE LOAD (TCLL) = 40 PSF (100 PSF FOR BALCONIES OVER 100 SQFT)
TOP CHORD DEAD LOAD (TCDL) = 10 PSF (SEE NOTE 2.4.)
BOTTOM CHORD LIVE LOAD (BCLL) = 0 PSF
BOTTOM CHORD DEAD LOAD (BCDL) = 5 PSF (SEE NOTE 2.4.)
2.3. ADDITIONAL LOADING CRITERIA:
*RESERVED
2.4. FINISH MATERIAL DEAD LOAD NOTES:
2.4.1. FINISH FLOORING MATERIALS NOT EXCEEDING 5 PSF HAVE BEEN ANTICIPATED IN THE NUMBERS ABOVE. IT IS THE CONTRACTOR'S RESPONSIBILITY TO DIRECT THE TRUSS MANUFACTURER TO INCREASE THE TCDL OF THE FLOOR TRUSSES WHERE ANTICIPATED FINISH MATERIAL WEIGHTS WILL BE HIGHER.
2.4.2. IT IS THE CONTRACTOR'S RESPONSIBILITY TO INFORM THE TRUSS MANUFACTURER AND ENGINEER IF ANTICIPATED FINISH MATERIALS, FIXTURES, OR USES OF OCCUPIED SPACE WILL EXCEED THE STANDARD INDUSTRY OR FLORIDA BUILDING CODE RESIDENTIAL CURRENT EDITION LOADS. GENERALLY STANDARD FLOORING AS PER 2.4.1. AND STANDARD CEILING FINISH IS 5/8" OR LESS GYPSUM MATERIAL. NON-STANDARD LOADS WOULD INCLUDE PLASTER OR CEILING TILES, LARGE CHANDELIER OR FAUX BEAM POINT LOADS, STONE SOAKER TUBS, MUD SET TILE FLOORS, STONE FLOORING, HOT TUB, POOL TABLE, ETC.
2.4.3. IT IS THE CONTRACTOR'S REPSONSIBILITY TO INFORM THE TRUSS MANUFACTURER AND ENGINEER IF ANY ANTICIPATED SOLAR PANELS WILL BE INSTALLED ON THE ROOF TOP.
2.5. WIND LOAD DESIGN CRITERIA:
*SEE WIND LOAD DESIGN PRESSURE CHART ON THIS SHEET.

3. GEOTECHNICAL AND FOUNDATIONS

3.1. MINIMUM ALLOWABLE SOIL LOAD BEARING PRESSURE IS ASSUMED TO BE 2,000 PSF AS PER TABLE R401.4.1.
3.2. IT IS THE CONTRACTOR'S RESPONSIBILITY TO VERIFY THE SOIL MATERIAL/STRATA, SOIL LOAD BEARING CAPACITY, AND COMPACTION PRIOR TO FOUNDATION CONSTRUCTION.
3.3. THE FOUNDATION SYSTEM FOR THE ATTACHED PROJECT HAS BEEN DESIGNED FOR A MINIMUM ALLOWABLE SOIL LOAD BEARING PRESSURE OF 2,000 PSF UNLESS THE CONTRACTOR HAS PROVIDED A SIGNED AND SEALED GEOTECHNICAL REPORT STATING OTHERWISE.
3.4. SITE PREPARATION SHALL COMPLY WITH THE REQUIREMENTS OF THE GEOTECHNICAL REPORT (IF PROVIDED) AND/OR THE FBCR.
3.5. EXTERIOR LOAD BEARING FOOTINGS SHALL HAVE A MINIMUM DEPTH OF NOT LESS THAN 12" BELOW THE FINISHED GRADE.
3.6. DRAINAGE AT FOUNDATIONS IS THE RESPONSIBILITY OF THE CONTRACTOR.

4. CONCRETE

4.1. OPERATION, INSTALLATION & PROCEDURE TO COMPLY WITH ACI STANDARDS.
4.2. CONCRETE FOOTINGS & SLABS ON GRADE SHALL HAVE A MINIMUM COMPRESSIVE STRENGTH OF 2,500 PSI @ 28 DAYS (U.N.O.). CONCRETE COLUMNS, BEAMS, AND ELEVATED SLABS SHALL HAVE A MINIMUM COMPRESSIVE STRENGTH OF 3,000 PSI @ 28 DAYS (U.N.O.).
4.3. REINFORCEMENT REBARS SHALL BE ASTM A615 GRADE 60 (U.N.O.).
4.4. CONCRETE SLABS ON GRADE SHALL HAVE A MINIMUM OF ONE OF THE FOLLOWING METHODS OF CRACK CONTROL (U.N.O.):
1) 6X6 W1.4XW1.4 WELDED WIRE FABRIC (WWF) PER R506.2.4.2.(2). (U.N.O.).
2) FIBER MESH PER R506.2.4.2.(1). (U.N.O.).
3) CONTRACTION (CONTROL) JOINT - SHALL BE CUT OR TOOLED IN THE SLAB AT LEAST ¼" THE THICKNESS OF THE SLAB BUT NOT LESS THAN 1" DEEP. JOINTS SHALL BE LOCATED NOT MORE THAN 10 FT APART AND SHALL BE INSTALLED WITHIN 24 HRS OF CONCRETE PLACEMENT. (NOT REQUIRED IF WWF OR FIBER MESH IS INSTALLED).
4.5. CONCRETE SLABS ON GRADE SHALL BE INSTALLED WITH A VAPOR BARRIER PER R506.2.3.
4.6. SEE STRUCTURAL DETAIL I/S-1 FOR REINFORCEMENT LAP SPLICES, EMBEDMENTS, AND HOOKS.

5. MASONRY

5.1. MASONRY CONSTRUCTION & MATERIALS SHALL CONFORM TO ALL REQUIREMENTS OF BUILDING CODE REQUIREMENTS FOR MASONRY STRUCTURES (TMS 402/ACI 530/ASCE 5) AND SPECIFICATION FOR MASONRY STRUCTURES (TMS 602/ACI 530.1/ASCE 6), EXCEPT AS MODIFIED BY THE REQUIREMENTS OF THESE CONTRACT DOCUMENTS.
5.2. GENERAL SPECIFICATION FOR MASONRY STRUCTURES:
5.2.1. TESTING OF FIELD MATERIALS FOR QUALITY CONTROL IS NOT REQUIRED BY ENGINEER FOR THIS PROJECT. QUALITY ASSURANCE IS NOT APPLICABLE.
5.2.2. COMPRESSIVE STRENGTH REQUIREMENT IS f'm = 1,500 PSI, DETERMINED BY THE ALLOWABLE STRESS METHOD. UNIT STRENGTH METHOD IS NOT APPLICABLE.
5.2.3. GROUT SHALL COMPLY WITH ASTM C476. GROUT SHALL BE 3,000 PSI, U.N.O. & HAVE A SLUMP RANGE OF 8" TO 11".
5.3. PRODUCTS:
5.3.1. MORTAR MATERIALS SHALL BE TYPE M OR S GRAY MORTAR AND CONFORM TO ASTM C270.
5.3.2. MASONRY UNIT MATERIALS SHALL BE 1,900 PSI MIN. CONCRETE MASONRY UNITS.
5.3.3. REINFORCEMENT, PRE-STRESSED TENDONS, & METAL ACCESSORIESSHALL BE 60 KSI REBAR (MIN.).
5.3.4. WELDED WIRE MESH TO BE INSTALLED AS SPECIFIED ON PLAN SET.
5.3.5. STAINLESS STEEL IS NOT APPLICABLE. COATING FOR CORROSION PROTECTION IS NOT APPLICABLE. CORROSION PROTECTION FOR TENDONS IS NOT APPLICABLE.
5.3.6. PRE-STRESSING ANCHORAGE, COUPLERS, & END BLOCKS ARE NOT APPLICABLE.
5.3.7. JOINT FILLERS ARE NOT APPLICABLE.
5.3.8. LINTELS ARE DESIGNED PER CAST-CRETE LOAD TABLES. LINTELS MANUFACTURED BY LOTTS, QUALITY, OR PRO-CRETE ARE CONSIDERED AN EQUIVALENT PRODUCT.
5.4. EXECUTION:
5.4.1. PIPES & CONDUITS ARE NOT APPLICABLE.
5.4.2. ACCESSORIES ARE NOT APPLICABLE.
5.4.3. MASONRY EXPANSION AND CONTROL JOINTS AS INDICATED IN THE PLAN SET ARE RECOMMENDATIONS ONLY, UNLESS CLEARLY DELINEATED AS "REQUIRED" OR "REQ'D."
5.4.4. WHEN USED, MASONRY CONTROL JOINTS SHOULD BE INSTALLED IN THE LOCATIONS SHOWN ON THE FLOOR PLAN AS A MINIMUM, AND ANY ADDITIONAL SHALL BE INSTALLED BETWEEN TWO VERTICAL FILLED CELLS WITH 1-#5 VERTICAL REBAR IN EACH. MASONRY CONTROL JOINTS SHOULD FOLLOW THE PROVISIONS OF TMS 402/ACI 530/ASCE 5. MASONRY CONTROL JOINTS MAY BE INSTALLED IN ACCORDANCE WITH TYPICAL DETAIL E/S-1, HOWEVER, ALTERNATIVE ACCEPTABLE CONTROL JOINT TYPES INCLUDE "STANDARD VERTICAL - UNKEYED CONTROL JOINT (3/8")" AND "MICHIGAN CONTROL JOINT."
5.4.5. MASONRY BED COURSE OVERHANGING SLAB:
1) FOR CMU BED COURSE OVERHANGING THE SLAB BY ½" OR LESS, NO REPAIR REQUIRED.
2) FOR CMU BED COURSE OVERHANGING THE SLAB BETWEEN ½" AND 1-1/4", GROUT THE BOTTOM 3 COURSES SOLID FOR THE LENGTH OF THE OVERHANG AND TWO MASONRY CELLS PAST, AROUND A CRNER IF NECESSARY.
3) FOR CMU BED COURSE OVERHANGING SLAB GREATER THAN 1-1/4", CONTACT THE ENGINEER FOR A REPAIR.

6. WOOD FRAMING

6.1. DIMENSIONED LUMBER SHALL BE DRESSED S4S, & SHALL BEAR THE GRADE STAMP OF THE MANUFACTURER'S ASSOCIATION.
6.2. ALL LUMBER SHALL BE SOUND, SEASONED, & FREE FROM WARP.
6.3. FRAMING WALLS & COLUMNS:
6.3.1. MINIMUM OF 3-PLY 2X STUD S.Y.P. #2 COLUMNS TO BE INSTALLED @ BEAM OR GIRDER TRUSS BEARING LOCATIONS, U.N.O.
6.3.2. ALL TRUSS BRACING LUMBER SHALL BE S.Y.P. #2 OR BETTER.
6.3.3. INTERIOR LOAD BEARING WALL STUDS TO BE SPACED @ 16" O.C. (U.N.O.) & SHALL BE S.Y.P. #2 OR BETTER, U.N.O. (WHEN DOUBLE STUDS INDICATED BELOW TRUSS BEARING LOCATIONS, IT IS ACCEPTABLE TO INSTALL THE DOUBLE STUDS @ 24" O.C. MAX. SPACING).
6.3.4. ALL LOAD BEARING COMPONENTS (STUDS, COLUMNS, BEAMS, BRACING, STRINGERS, LEDGERS, ETC.) SHALL BE S.Y.P. #2 OR BETTER, U.N.O.
6.3.5. INTERIOR NON-LOAD BEARING WALLS SHALL BE UTILITY GRADE OR BETTER, AND MAY BE SPF LUMBER OR METAL STUDS IN ACCORDANCE WITH FBCR SECTION R603.1 & AISI S230.
6.3.6. INSTALL BLOCKING IN ALL INTERIOR LOAD BEARING WALLS @ MID-HEIGHT WITH STUDS OVER 8'-0" (EXCEPTION: AT DOUBLE STUD CONDITION, INSTALL BLOCKING @ MID-HEIGHT REGARDLESS OF STUD HEIGHT). INTERIOR LOAD BEARING WALLS WITH STUD HEIGHTS GREATER THAN 10'-0" SHALL HAVE BLOCKING INSTALLED AT THIRD POINTS. EXTERIOR FULLY SHEATHED WALLS DO NOT REQUIRE MID-HEIGHT BLOCKING. ALL WALL SHEATHING JOINTS SHALL BE BLOCKED. BRACE GABLE END WALLS @ 4'-0" O.C. MINIMUM.
6.3.7. ALL LOAD BEARING WALLS SHALL HAVE S.Y.P. #2 DOUBLE TOP & SINGLE BOTTOM PLATES & SHALL BE FASTENED PER DETAILS HEREIN. INTERIOR LOAD BEARING COLUMNS/STUD PACKS NEED NOT PENETRATE TOP AND BOTTOM PLATES AS LONG AS TOP PLATE IS OF A LUMBER GRADE EQUAL TO OR BETTER THAN THE BOTTOM CHORD OF THE TRUSS/JOIST ABOVE.
6.3.8. ALL LOAD BEARING STUDS (INCLUDING EACH STUD OF A DOUBLE STUD CONDITION) SHALL BE ATTACHED TO TOP & BOTTOM PLATES WITH (3) 0.131" X 3-1/2" TOENAILS, MIN., U.N.O.
6.3.9. ALL TRUSSES BEARING ON FRAME SHALL BE ATTACHED WITH (3) 0.131" X 3-1/2" TOENAILS, IN ADDITION TO THE REQUIRED STRAPPING INDICATED WITHIN PROJECT DOCUMENTS.
6.4. ALL LUMBER IN CONTACT WITH MASONRY OR CONCRETE, IN CONTACT WITH EARTH, OR EXPOSED TO THE ELEMENTS, SHALL BE PRESERVATIVE TREATED (P.T.) OR NATURAL DURABLE WOOD.
6.5. PRESERVATIVE TREATED LUMBER SHALL BE IN ACCORDANCE WITH AMERICAN WOOD PROTECTION ASSOCIATION (AWPA) U1. ALL CUT ENDS OR CUT SURFACES OF PRESERVATIVE-TREATED LUMBER SHALL BE FIELD TREATED IN ACCORDANCE WITH AWPA M4.
6.6. ALL SHEATHING SHALL BE APA SPAN RATED FOR APPROPRIATE APPLICATION AND ORIENTATION. ALL ROOF SHEATHING TO BE INSTALLED WITH PLY CLIPS (MAX. 24" O.C.). SEE PLANS FOR REQUIRED SHEATHING THICKNESS. SEE TYPICAL NAILING SCHEDULE FOR SHEATHING ATTACHMENT. INSTALL ALL SHEATHING WITH EDGE GAPS AS REQUIRED BY THE APA.
6.6.1. ROOF SHEATHING:
(1) SHINGLE OR METAL: 7/16" MIN. THICKNESS APA RATED SHEATHING (SPAN RATING OF 24/16 OR 32/16 IS ACCEPTABE) SUPPORTED OVER 24" MAX. SPAN.
(2) TILE: 15/32" MIN. THICKNESS APA RATED SHEATHING (SPAN RATING OF 24/16 OR 32/16 IS ACCEPTABLE) SUPPORTED OVER 24" MAX. SPAN. CONTRACTOR SHALL ADJUST MIN. SHEATHING CRITERIA, IF NECESSARY, TO ACCOMMODATE THE TILE MANUFACTURER'S WARRANTY REQUIREMENTS. THE MOST STRINGENT SHALL CONTROL.
(3) ROOF SHEATHING THICKNESS HAS BEEN CALCULATEDPER FBC-RESIDENTIAL R301.1.3. "ENGINEERED DESIGN" USING THE FBC-BUILDING AND ASCE 7.
6.6.2. WALL SHEATHING: 7/16" MIN. THICKNESS APA RATED SHEATHING SUPPORTED OVER 24" MAX. SPAN.
6.6.3. FLOOR SHEATHING: CARPET, VINYL, WOOD, ETC., ¾" TONGUE & GROOVED APA RATED SHEATHING SUPPORTED OVER 24" MAX. SPAN. IF NECESSARY FOR CERAMIC TILE, MARBLE, STONE, ETC., SEE MANUFACTURER'S RECOMMENDATIONS AND/OR WARRANTY REQUIREMENTS. THE MOST STRINGENT SHALL CONTROL.
6.7. ALL NAILING & BOLTING SHALL COMPLY WITH AMERICAN INSTITUTE OF TIMBER CONSTRUCTION REQUIREMENTS. ALL NAILS EXPOSED TO THE EXTERIOR SHALL BE GALVANIZED.
6.8. ALL CONNECTION HARDWARE SHALL BE GALVANIZED & SUPPLIED BY SIMPSON STRONG-TIE, USP, OR EQUIVALENT. ALL NAIL HOLES SHALL BE FILLED OR AS PRESCRIBED BY THE MANUFACTURER.
6.9. BRACING: TEMPORARY BRACING OF THE ROOF SYSTEM SHALL BE INSTALLED PER BCSI RECOMMENDATIONS & SHALL BE UTILIZED AS THE PERMANENT BRACING OF THE ROOF SYSTEM, U.N.O.
6.10. ALL WOOD FRAMING SHALL BE IN COMPLIANCE WITH THE LATEST NDS EDITION FOR WOOD CONSTRUCTION.
6.11. INTERIOR FRAME SHEAR WALL SHALL BE CONSTRUCTED WITH S.Y.P. #2 STUDS @ 16" O.C. MAX., WITH 7/16" APA RATED SHEATHING ATTACHED TO ONE SIDE OF WALL WITH NAILING PATTERN PER DETAIL O/S-2. ATTACH BOTTOM PLATE TO FOUNDATION WITH ½" DIA. X 10" A.B. @ 24" O.C. OR TO WOOD FLOOR TRUSS OR BLOCKING WITH (4) SDS25500 SCREWS @ 24" O.C. MAX. SPACING. ATTACH TOP PLATE TO TRUSSES OR BLOCKING WITH SIMPSON HTS16 STRAP @ 24" O.C. MAX. SPACING.
6.12. WHEN EMBEDDED MASONRY/CONCRETE META OR HETA TRUSS STRAPS ARE OFFSET FROM THE FACE OF THE TRUSS 1/8" TO A MAX. OF 1-1/2" PER SIMPSON SPECIFCATIONS, IT IS ACCEPTABLE TO INSTALL A VERTICAL 2X4 MIN. SHIM THAT IS RIPPED TO THE THICKNESS OF THE OFFSET. STRAPPING FASTENER LENGTH SHALL BE INCREASED TO ACCOUNT FOR THE FULL THICKNESS OF THE SHIM (I.E. 1" SHIM REQUIRES 2-1/2" LENGTH FASTENERS MINIMUM).
6.13. SUB FASCIA FRAME TO BE 2X6 (MIN.) S.P.F. #2 ATTACHED TO EACH TRUSS TAIL WITH (3) 0.131" X 3-1/2" R.S. NAILS.

LIMITATIONS (THE FOLLOWING SHALL APPLY U.N.O.)

VORTEX ENGINEERING, LLC. HAS CHECKED THE ATATCHED DESIGN FOR ITS STRUCTURAL COMPLIANCE WITH SECTION R301 OF THE FLORIDA BUILDING CODE, RESIDENTIAL 8TH ED., AND IS NOT RESPONSIBLE FOR THE DESIGN'S ARCHITECTURAL AND/OR DRAFTING CRITERIA (THESE ITEMS INCLUDE BUT ARE NOT LIMITED TO: DIMENSIONS, AESTHETICS, CONTINUITY OF LAYOUTS, FIRE RATING CRITERIA (FIRE WALL ASSEMBLY, ETC.). ANY DISCONTINUITY IN DESIGN IS THE RESPONSIBILITY OF THE DESIGNER. VORTEX ENGINEERING, LLC. IS NOT RESPONSIBLE FOR THE SELECTION OF PRODUCTS TO BE USED ON THE PROJECT. IT IS THE RESPONSIBILITY OF THE CONTRACTOR AND/OR DESIGNER TO SELECT PRODUCTS WITH A FLORIDA PRODUCT APPROVAL AND THAT MEET OR EXCEED THE DESIGN LOADS WITHIN THE PLAN DOCUMENTS.

BLOCKING DEFINED

(THE FOLLOWING SHALL APPLY U.N.O.)

THROUGHOUT THIS PLAN THE TERM BLOCKING IS USED AS A GENERIC TERM. THIS NOTE SEEKS TO CLARIFY PROPER BLOCKING TECHNIQUE:'

- BLOCKING SHALL BE 2X4 #2 SYP, U.N.O.
- BLOCKING SHALL BE ATTACHED WITH (3) 0.131X3-1/2" TOENAILS INTO THE STUDS AT EITHER END, U.N.O.
- BLOCKING IN A WALL CAVITY IS TO BE INSTALLED IN THE SAME ORIENTATION AS THE BOTTOM PLATE (HORIZONTAL AND FLATWISE), AND SHALL EXTEND TO FILL THE CAVITY FORMED BY THE STUDS. U.N.O.
- BLOCKING WITHIN A FLOOR TRUSS WEB SPACE IS TO BE ORIENTED THE SAME AS THE END VERTICAL OF THE TRUSS (ON END), AND SHALL EXTEND FROM TOP TO BOTTOM CHORD, OR IF INTERRUPTED BY DIAGONAL WEB COMPONENTS, IT SHALL EXTEND FROM THE TOP CHORD, TO THE WEB MEMBER, AND A SECOND PIECE SHALL BE INSTALLED FROM THE WEB MEMBER TO BOTTOM CHORD, ALIGNED VERTICALLY, U.N.O.
- BLOCKING WITHIN A ROOF TRUSS WEB SPACE SHALL BE ORIENTED PERPENDICULAR TO THE BOTTOM CHORD, AND FLATWISE WITHIN THE PLANE OF THE TRUSS WEB, ON END. BLOCKING WITHIN THE TRUSS SHALL EXTEND FROM BOTTOM CHORD TO TOP CHORD, OR IF INTERRUPTED BY DIAGONAL WEB COMPONENTS, IT SHALL EXTEND FROM THE TOP CHORD, TO WEB MEMBER, AND A SECOND PIECE SHALL BE INSTALLED FROM THE WEB MEMBER TO BOTTOM CHORD, ALIGNED VERTICALLY, AS NECESSARY TO FACILITATE THE ITEM FOR WHICH BLOCKING IS NEEDED, U.N.O.
- BLOCKING USED TO FILL VOID SPACE (I.E. THE VOID SPACE BETWEEN THE BOTTOM PLATE OF AN UPPER WALL TO THE MASONRY OR FRAME WALL BELOW WITHIN THE AREA TAKEN UP BY TRUSS WORK.) FOR TRANSFERRING UPPER POINT LOADS (I.E. - STUD PACKS) TO LOWER COMPONENTS SHALL BE INSTALLED IN THE SAME ORIENTATION, OF THE SAME WOOD TYPE AND GRADE, AND OF THE SAME NUMBER OF PLIES, AS THE STUD PACK ABOVE.
- BLOCKING INSTALLED BETWEEN ADJACENT TRUSSES SHALL BE PERPENDICULAR TO THE TRUSS CHORD BEING BLOCKED, AND SHALL BE ORIENTED ON EDGE. EXCEPTION: AT HIP AND VALLEY LOCATIONS BLOCKING WHICH SUPPORTS THE SHEATHING JOINTS MUST FOLLOW THE HIP OR VALLEY AND SHALL THEREFORE NOT BE PERPENDICULAR TO THE TRUSS CHORD BEING BLOCKED. U.N.O.
- IN GENERAL BLOCKING INSTALLED AS PER THE CRITERIA ABOVE IS INTENDED FOR STRAPPING, BRACING, AND SUPPORT, U.N.O.

DISCLAIMER

(THE FOLLOWING SHALL APPLY U.N.O.)

CONTRACTOR IS TO VERIFY ALL DIMENSIONS IN THE FIELD AND REPORT ANY DISCREPANCIES TO THE ENGINEER PRIOR TO STARTING ANY WORK.

ANY CHANGES TO THESE PLANS, REGARDLESS OF HOW MINOR, WITHOUT WRITTEN, SEALED APPROVAL OF VORTEX ENGINEERING, LLC, OR ANY CONSTRUCTION EXECUTED FROM THESE PLANS WITHOUT THE EXPRESS APPROVAL OF VORTEX ENGINEERING, LLC SHALL AUTOMATICALLY RENDER VORTEX ENGINEERING, LLC. HARMLESS TO ANY LIABILITY, CLAIMS, SUITS, OR LITIGATION BY ANY INTERESTED PARTIES IN THE PROJECT. IF BOUND SPECIFICATIONS ACCOMPANY THESE PLANS, THEY SHOULD BE READ CAREFULLY FOR ADDITIONAL CONDITIONS.

SPECIFICATION FOR ANCHOR BOLTS

(THE FOLLOWING SHALL APPLY U.N.O.)

- ALL 1/2" DIA. A.B. INTO THE TOP OF A MASONRY KO BLOCK COURSE SHALL HAVE A MINIMUM EMBEDMENT OF 5".
- ALL 1/2" DIA. OR 5/8" DIA. A.B. INTO THE SIDE OF FILLED MASONRY SHALL HAVE A MINIMUM EMBEDMENT OF 5".
- ALL 1/2" DIA. A.B. INTO THE TOP OF A GROUTED MASONRY STEMWALL SHALL HAVE A MINIMUM EMBEDMENT OF 6".
- ALL 1/2" DIA. A.B. INTO THE TOP OF CONCRETE THICKENED SLABS SHALL HAVE A MINIMUM EMBEDMENT OF 7".
- ANY DIFFERING NOTATIONS FOR EMBEDMENT MADE ON THE PLAN SET SHALL CONTROL.
- THESE NOTES ARE SPECIFICALLY FOR ANCHOR BOLTS WITH A 90 DEGREE HOOK, THEY DO NOT APPLY TO ANY OTHER ANCHORAGE DEVICE. SPECIFICATIONS FOR THOSE DEVICES MUST ACCOMPANY THE NOTATION TO USE SAME.

CONFLICTS

(THE FOLLOWING SHALL APPLY U.N.O.)

- REGARDLESS OF ANY NOTE TO THE CONTRARY IN THE PLAN SET, EXCEPT AS INDICATED BELOW, IN ANY LOCATION WHERE THE PLAN SPECIFICATIONS SEEM TO CONFLICT WITH THEMSELVES, THE CODE, OR THE MANUFACTURER'S SPECIFICATIONS, THE MOST STRINGENT CRITERIA SHALL APPLY.
- WHERE A SEALED DIRECTIVE FROM THE ENGINEER OF RECORD IS PROVIDED RELATING TO A CONFLICTED ITEM, THAT DIRECTIVE SHALL CONTROL.

SPECIFICATION FOR BUCK ATTACHMENT

(THE FOLLOWING SHALL APPLY U.N.O.)

- IF 1x - ATTACH WINDOW THROUGH BUCK TO MASONRY/WOOD FRAMING. IF 2x - ATTACH TO 2x BUCK.
- IF 2x - ATTACH TO MASONRY w/ 1/4" x 3" MASONRY ANCHORS @ 12" O.C. w/ MAX. 6" FROM END OF BUCK (TYP. ALL 2x WINDOW BUCK ATTACHMENT.)

DESIGN PRESSURES

ULTIMATE WIND SPEED (Vult):	140 MPH
NOMINAL WIND SPEED (Valt):	108 MPH
RISK CATEGORY:	II
WIND EXPOSURE:	C
INTERIOR PRESSURE COEFF.:	+/- 0.18 (ENCLOSED)
MAX MEAN ROOF HEIGHT:	30 FT

COMPONENTS & CLADDING ROOF PRESSURES

AREA (SF)	ULTIMATE PRESSURES +/- (PSF)		ALLOWABLE PRESSURES +/- (PSF)	
10	32.6	-158.0	19.6	-94.8
20	30.5	-137.1	18.3	-82.3
50	26.3	-107.8	15.8	-64.7
100	22.2	-82.8	13.3	-49.7

*NOTE: DESIGN ROOF PRESSURES GIVEN ABOVE ARE WORST CASE ZONE 3 PER ASCE 7-22 AND ARE TO BE APPLIED TO THE ENTIRE ROOF STRUCTURE.

COMPONENTS & CLADDING GARAGE DOOR PRESSURES

OPENING WIDTH (FT)	ULTIMATE PRESSURES +/- (PSF)		ALLOWABLE PRESSURES +/- (PSF)	
8	43.8	-50.3	26.3	-30.2
10	43.1	-48.9	25.8	-29.4
12	42.5	-48.0	25.5	-28.8
16+	41.6	-46.6	24.9	-27.9

*NOTE: GARAGE DOOR PRESSURES ASSUME 2'-8" MAX. IN END ZONE.

NOTES

*CHARTS MAY BE INTERPOLATED FOR INTERMEDIATE PRESSURES.

*PER R704.1, USE 10 SF WALL PRESSURE LISTED HERE FOR SOFFIT PRESSURE VALUE.

COMPONENTS & CLADDING WALL PRESSURES

AREA (SF)	ULTIMATE END ZONE PRESSURES +/- (PSF)		ULTIMATE INTERIOR ZONE PRESSURES +/- (PSF)		ALLOWABLE END ZONE PRESSURES +/- (PSF)		ALLOWABLE INTERIOR ZONE PRESSURES +/- (PSF)	
10	49.3	-66.0	49.3	-53.5	29.6	-39.6	29.6	-32.1
15	48.0	-63.4	48.0	-52.2	28.8	-38.1	28.8	-31.3
20	47.1	-61.6	47.1	-51.3	28.3	-37.0	28.3	-30.8
25	46.4	-60.2	46.4	-50.6	27.8	-36.1	27.8	-30.3
30	45.8	-59.0	45.8	-50.0	27.5	-35.4	27.5	-30.0
35	45.3	-58.0	45.3	-49.5	27.2	-34.8	27.2	-29.7
40	44.9	-57.2	44.9	-49.1	26.9	-34.3	26.9	-29.4
45	44.5	-56.4	44.5	-48.7	26.7	-33.8	26.7	-29.2
50	44.2	-55.7	44.2	-48.3	26.5	-33.4	26.5	-29.0
55	43.9	-55.1	43.9	-48.0	26.3	-33.1	26.3	-28.8
60	43.6	-54.6	43.6	-47.8	26.1	-32.7	26.1	-28.7
65	43.3	-54.0	43.3	-47.5	26.0	-32.4	26.0	-28.5
70	43.1	-53.6	43.1	-47.3	25.8	-32.1	25.8	-28.4
75	42.9	-53.1	42.9	-47.0	25.7	-31.9	25.7	-28.2
80	42.7	-52.7	42.7	-46.8	25.6	-31.6	25.6	-28.1
85	42.5	-52.3	42.5	-46.6	25.5	-31.4	25.5	-28.0
90	42.3	-52.0	42.3	-46.5	25.4	-31.2	25.4	-27.9
95	42.1	-51.6	42.1	-46.3	25.3	-31.0	25.3	-27.8
100	41.9	-51.3	41.9	-46.1	25.2	-30.8	25.2	-27.7
105	41.8	-51.0	41.8	-46.0	25.1	-30.6	25.1	-27.6
110	41.6	-50.7	41.6	-45.8	25.0	-30.4	25.0	-27.5
115	41.5	-50.4	41.5	-45.7	24.9	-30.2	24.9	-27.4
120	41.4	-50.1	41.4	-45.5	24.8	-30.1	24.8	-27.3
125	41.2	-49.8	41.2	-45.4	24.7	-29.9	24.7	-27.2
130	41.1	-49.6	41.1	-45.3	24.7	-29.8	24.7	-27.2
135	41.0	-49.4	41.0	-45.2	24.6	-29.6	24.6	-27.1
140	40.9	-49.1	40.9	-45.0	24.5	-29.5	24.5	-27.0
145	40.7	-48.9	40.7	-44.9	24.4	-29.3	24.4	-27.0
150	40.6	-48.7	40.6	-44.8	24.4	-29.2	24.4	-26.9

*PER FBC FIGURE R301.2(7) THE END ZONE IS SET AT 4 FT FROM AN EXTERIOR CORNER.

NOTE:
CONTRACTOR TO VERIFY ALL DIMENSIONS IN FIELD AND REPORT ANY DISCREPANCIES TO ENGINEER PRIOR TO STARTING ANY WORK.

NOTE:
CONTRACTOR MUST REVIEW ALL NOTES, DETAILS, CODES & STANDARDS WITHIN THE CONSTRUCTION DOCUMENTS AND APPLY WHERE APPLICABLE. IF CLARIFICATION IS REQUIRED, CONTACT OUR OFFICE PRIOR TO CONSTRUCTION.

THESE PLANS ARE PROPERTY OF VORTEX ENGINEERING, LLC., AND SHALL BE RETURNED UPON COMPLETION OF THE PROJECT. USE OR COPY IS PERMITTED BY CONTRACT ONLY. ANY CHANGES TO THESE PLANS, REGARDLESS OF HOW MINOR, WITHOUT WRITTEN APPROVAL OF VORTEX ENGINEERING, LLC, OR ANY CONSTRUCTION EXECUTED FROM THESE PLANS WITHOUT THE EXPRESS APPROVAL OF VORTEX ENGINEERING, LLC SHALL AUTOMATICALLY RENDER VORTEX ENGINEERING, LLC. HARMLESS TO ANY LIABILITY, CLAIMS, SUITS, OR LITIGATION BY ANY INTERESTED SPECIFICATIONS ACCOMPNY THESE PLANS, THEY SHOULD READ CAREFULLY FOR ADDITIONAL CONDITIONS.

REVISIONS	BY

I HEREBY CERTIFY THAT I HAVE REVIEWED THE ATTACHED DESIGN, AND FIND IT TO BE IN COMPLIANCE WITH SECTION R301 OF THE FLORIDA BUILDING CODE, RESIDENTIAL (8TH EDITION).

THE ENGINEER HAS NOT REVIEWED THE PRE-ENGINEERED TRUSS MANUF. LAYOUT TO DETERMINE ANY LOAD BEARING CONDITIONS AND RESERVES THE RIGHT TO MAKE ANY CHANGES AFTER TRUSS LOAD INFORMATION IS SUPPLIED TO THE ENGINEER.

SEALED FOR STRUCTURE ONLY

Asbed A. Avedikian, P.E.
FL REG # 86623

Vortex Engineering, LLC.
7001 Temple Terrace Highway
Tampa, Florida 33637
1-877-6VORTEX (1-877-686-7839
COA 28035

Andrew J. Meisheid, P.E.
FL REG # 83217

STRUCTURAL DETAILS

FBC 8th ED.

DATE	
SCALE	N.T.S.
DRAWN	MK/PDK/JRW
JOB	-

Sheet content:
Structural Details

NOTE:
DETAILS SHOWN ARE TYPICAL DETAILS THAT SHALL BE APPLIED WHERE CONDITION OCCURS ON THE STRUCTURE, UNLESS NOTED OTHERWISE WITHIN THE PLAN SET.

Sheet number:
N1