AVG-306CWM

30'' Under Cabinet hood

Selected Model	
Model number	AVG-306CWM
Dimensions	
Dimensions	30'' (W) x 22'' (D) x 6'' (H)
Exterior Appearence	
Color	White
Features	
Control	Soft touch with LED display
Lighting	2 bulbs, 2W LED (bulbs included)
Blower type	600 CFM, 3-speed
Filter type	2 aluminium superior micro hole filters and stainless steel baffle filters included
Duct transition	6'' Round (Top) 3 1/4'' x 10'' rectangular (Rear) 3 1/4'' x 10'' rectangular (Top)
Ducting	Ducted
UPC code	0632726207359
Electrical Requirements	
Electrical requirements	120V / 60Hz
Warranty	
1-year Warranty	Parts and labour

The information contained herein is based on sources that we believe to be reliable, but is not guaranteed by us, may be incomplete or may change without notice

Dimensions

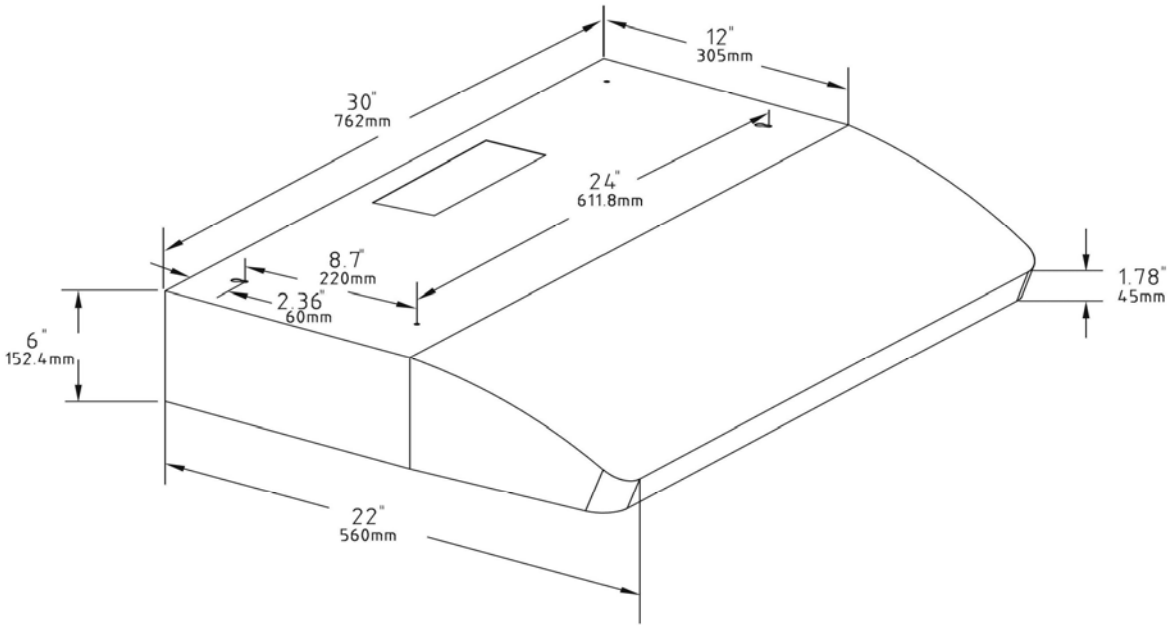

Installation

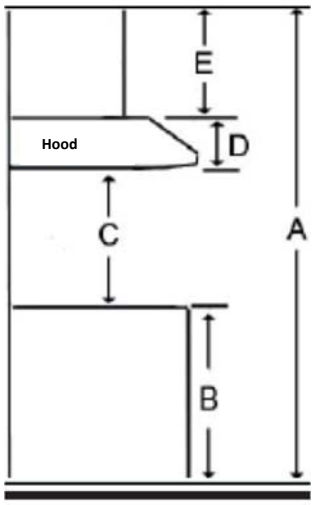

A	Floor to ceiling height	variable
B	Floor to counter top height (standard)	36''
C	Recommended height between cooking surface and bottom of the hood	28 to 30''
D	Hood height	6''
E	Chimney height	N/A

Duct transition

Top 6'' Rond

Top & back 3 ¼ x 10''

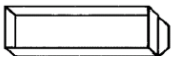

The information contained herein is based on sources that we believe to be reliable, but is not guaranteed by us, may be incomplete and/or may change without notice.