ARBM172BSE

17 cu ft. Refrigerator 2 doors, Black stainless, bottom mount

Selected Model	
Model number	ARBM172BSE
Exterior Appearence	
Door Design	Flat door
Handle Type	Recessed handle
Freestanding	Yes
Counter-Depth	Yes
Cabinet color	Black
Frontage Color	Black Stainless
Reversible Door	Yes
Dimensions	
Overall Heigh (in.)	69 1/4"
Overall Width (in.)	31 1/8"
Features	
Configuration	Single door
Freezer Type	Bottom door
Temperature Management Control	Electronic soft touch control
Door swing	Right
Interior Lighting	LED lights
Control Panel	Inside
Ref Storage bin	4 smalls + 2 large door bins
Depth (po)	27 1/4"
Depth (po) without the door	24"
Freezer storage	2 large drawers + 1 ice tray
Capacity	
Total Capacity	17.1 cu. ft
Refrigerator Capacity	12.15 cu.ft
Freezer Capacity	4.95 cu ft.
Electrical Requirements	
Energy Consumption	ENERGY STAR
Warranty	
3 Year warranty Sealed system (parts)	3 Year warranty Sealed system (parts)
Complete 2 year warranty parts & labor	Complete 2 year warranty parts & labor

The information contained herein is based on sources that we believe to be reliable, but is not guaranteed by us, may be incomplete or may change without notice

ARBM172SE/WE/BSE

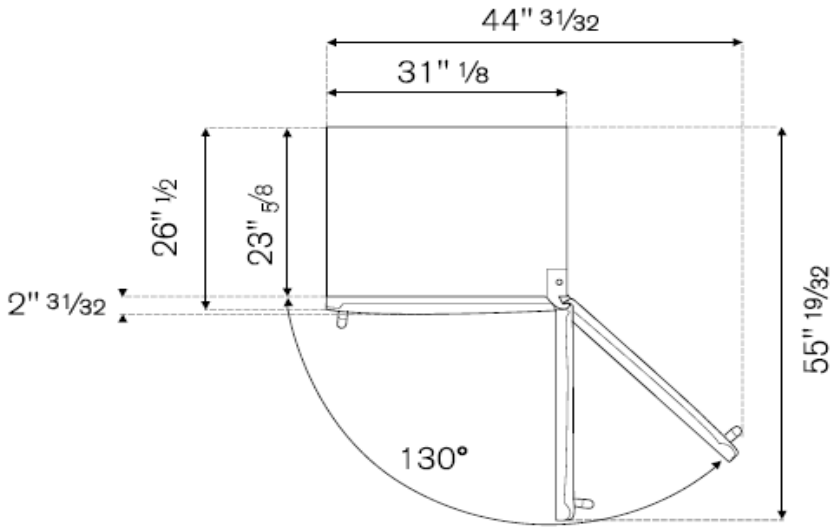

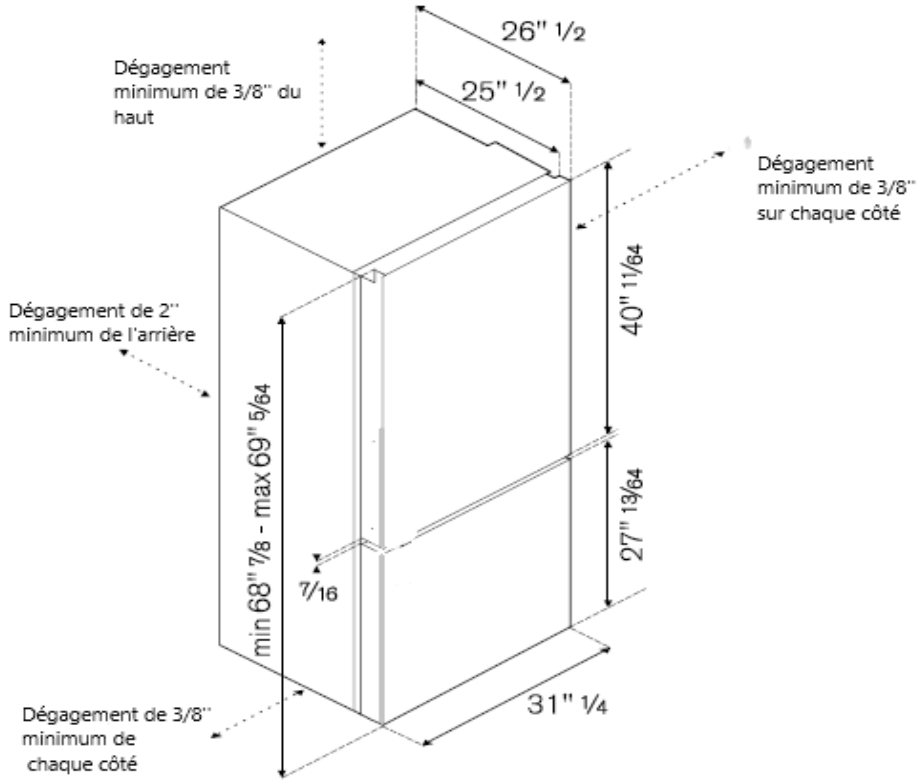

Unit dimension		Box dimension
Width (in.)	31,1	33,75
Depth (in.) cabinet	28,5	28,6
Height (in.)	69,1	71,6
Weight NET/GROSS	Net: 87,40 kg/192,28 lbs	Gross: 106,45 kg/ 234,19 lbs
Depth without door	25 1/2''	
Height Freezer door	27 13/64''	
Height Refrigerator door	40 11/64''	
Space between Refrigerator & freezer door	7/16''	
Depth including door 90 degree open	55 19/32''	
With including door 130 degree open	44 31/32''	