AVM-278PS
30" Insert hood





Selected Model	
Model number	AVM-278PS
Dimensions	
Dimensions	27 3/8" (W) x 11 3/4"(D) x 13 1/2"-16" (H)
Exterior Appearence	
Stainless steel grade	201
Features	
Control	Mechanical push buttons
Lighting	2 bulbs, 3W LED (bulbs included)
Blower type	860 CFM, 3-Speed
Blower performance	Speed 1, 1.0 sones Speed 3, 4.0 sones
Filter type	2 aluminium superior micro hole filters and stainless steel baffle filters included
Duct transition	6" Round (Top)
Ducting	Ducted
UPC code	0646437667494
Electrical Requirements	
Electrical requirements	120V / 60Hz / 2.7 Amps
Warranty	
1-year Warranty	Parts and labour

The information contained herein is based on sources that we believe to be reliable, but is not guaranteed by us, may be incomplete or may change without notice

Dimensions

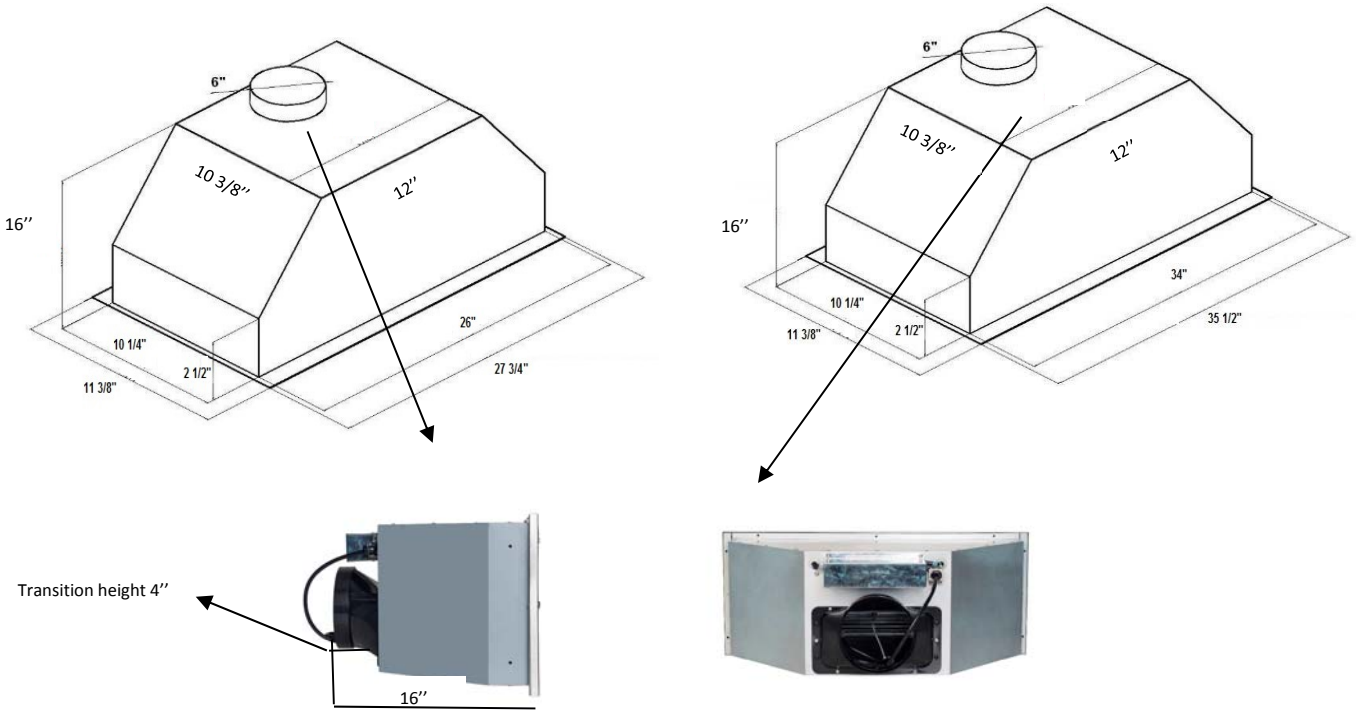

Installation

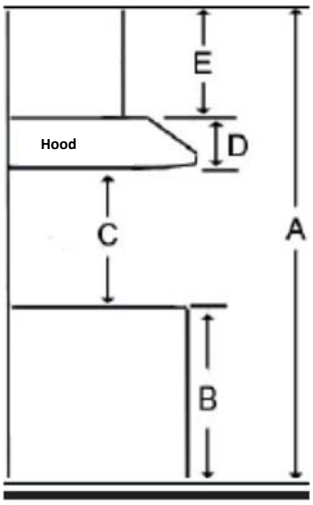

A	Floor to ceiling height	variable
B	Floor to counter top height (standard)	36''
C	Recommended height between cooking surface and bottom of the hood	28'' to 30''
D	Hood height (including transition height (4''))	16''
E	Cabinet height	N/A

Duct transition

Top 6'' Round



The information contained herein is based on sources that we believe to be reliable, but is not guaranteed by us, may be incomplete and/or may change without notice.