6L90/80/50

DELAYED REVERSE ENGAGEMENT WHEN HOT

COMPLAINT: A vehicle equipped with a 6L series transmission may exhibit a delay in reverse once the transmission reaches operating temperature.

CAUSE: On the bottom of the 3-5-Reverse clutch housing there is a drum support bearing the contains a GREEN seal as seen in figure 1. The seal ensures there is a sufficient volume of oil in the compensator circuit.
If the seal is missing, damaged or worn, the leak this condition creates will cause enough of a drop in pressure resulting in the above complaint even when the pump slide is at the maximum volume position.

CORRECTION: The bearing and seal assembly is available from GM parts dealers. Replacing the bearing and seal assembly is a recommended standard rebuild requirement. The removal of the bearing/seal assembly is shown in figure 2. The installation of the bearing/seal assembly is shown in figure 3.
The hydraulic schematic seen in figure 4 indicates the route compensator oil travels as it gets to the seal when the transmission in the reverse range.

SERVICE INFORMATION:
3-5-Reverse Clutch Housing Support Bearing And Seal Assembly.....24226393

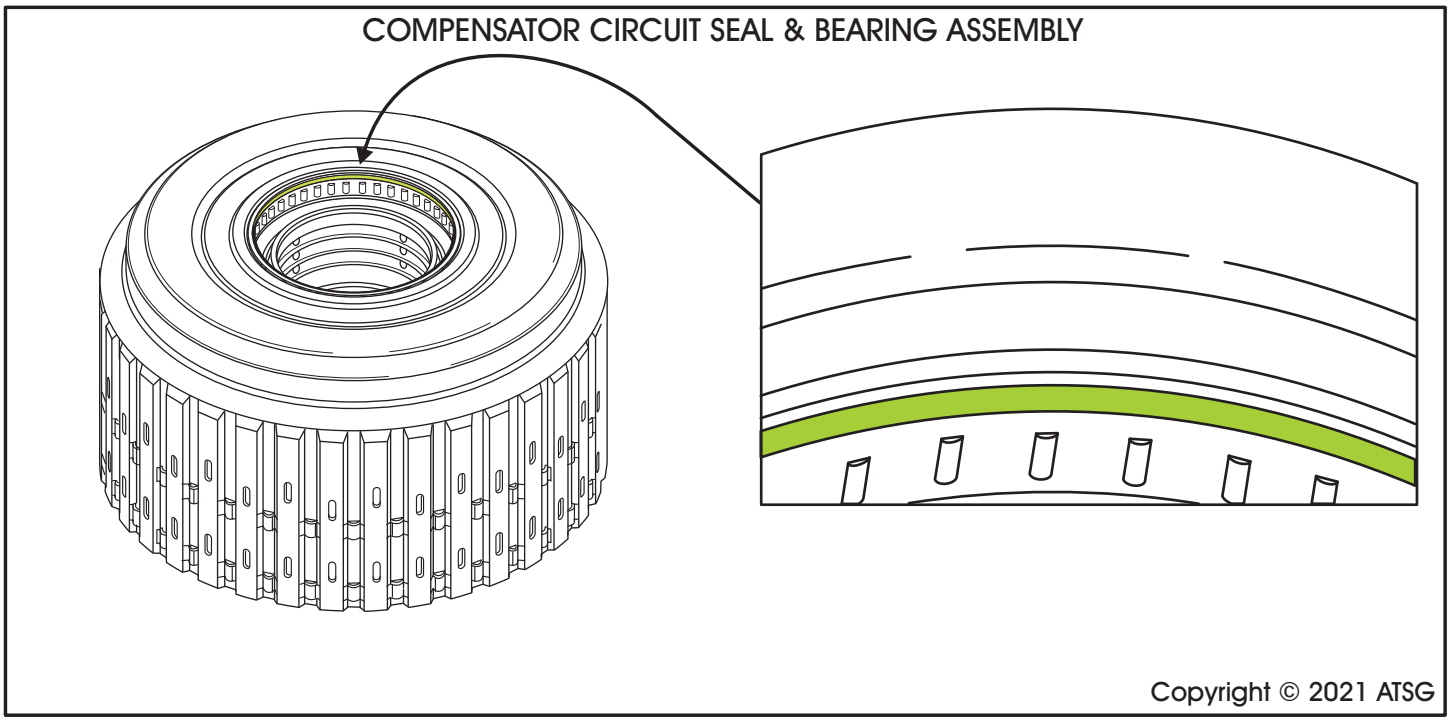

Figure 1

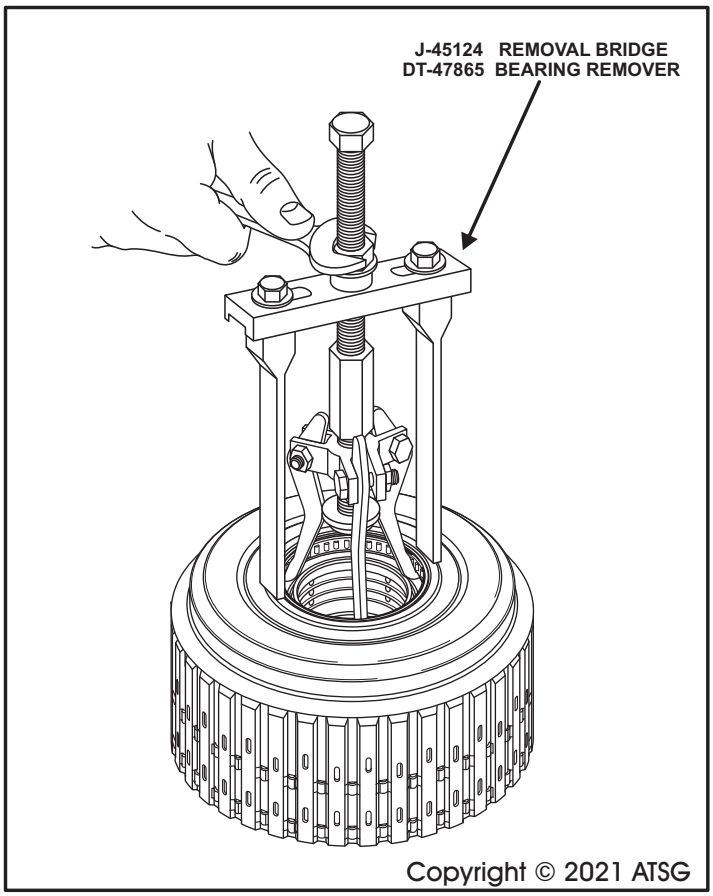

Figure 2

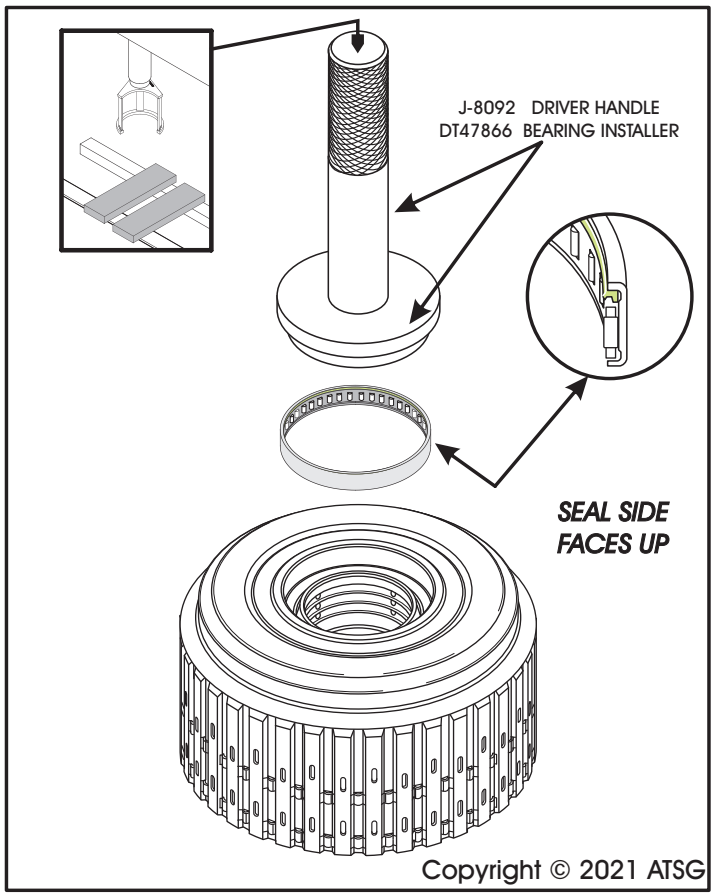

Figure 3

6L90/80/50

DELAYED REVERSE ENGAGEMENT WHEN HOT

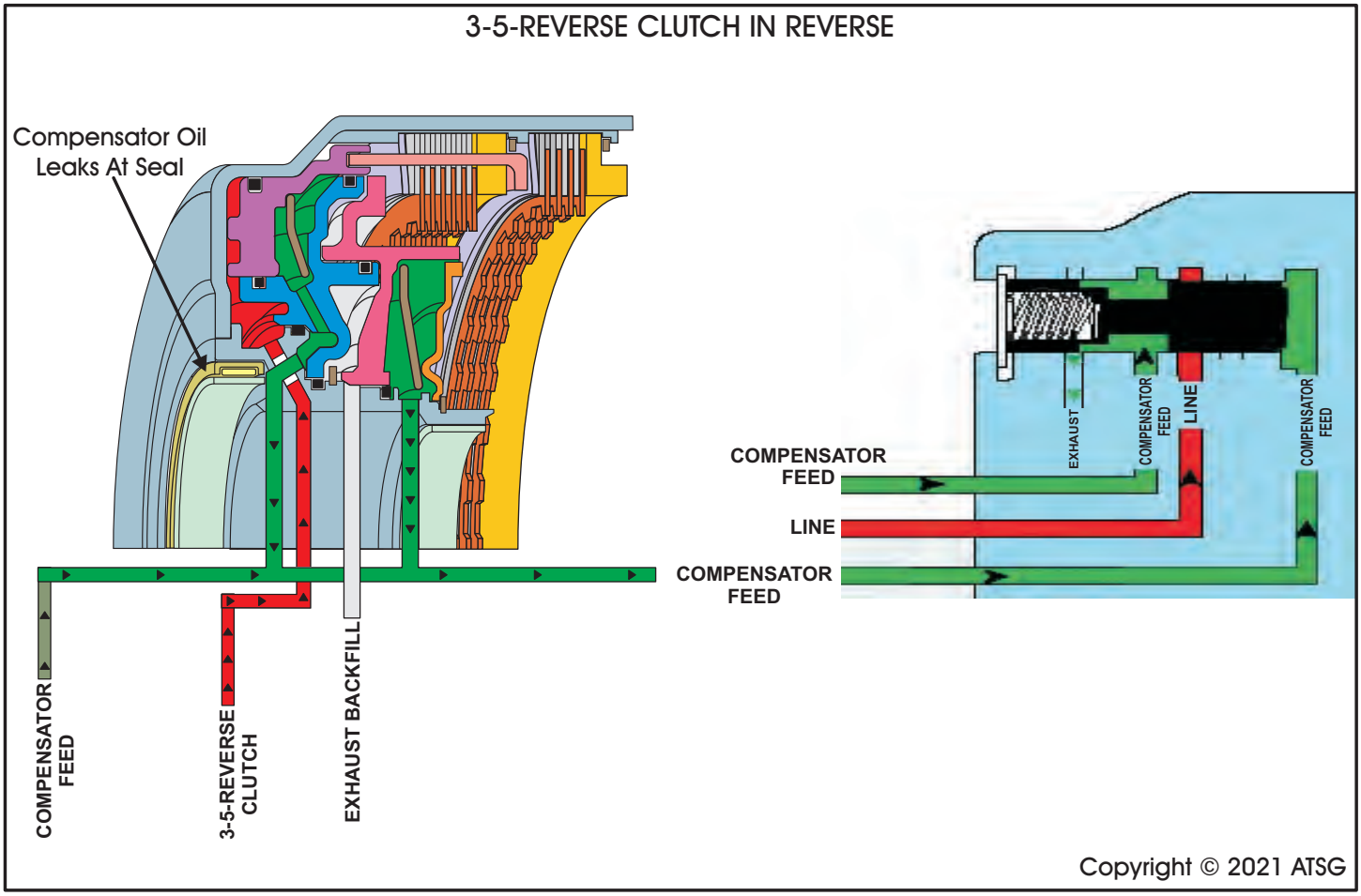

Figure 4