FORD 5R110W

FRONT PUMP DAMAGE

COMPLAINT: A 5R110W Transmission may have front pump damage before or after overhaul. This resembles the type of damage caused by poor ground connections in the vehicle which can be found in the 2016 ATSG White Seminar Manual, but in this scenario it is not an electrical problem.

This type of pump damage can be the result of rebuild errors, installation errors or aggressive programming.

CAUSE: The damage to the pump gears shown in figure 1 on the left can be caused by electrical ground failure or if the pump bushing to converter hub clearance is too tight. Either of these will weld the pump gears to the pump separator plate.

The damage to the pump gears also shown in figure 1 on the right is caused by a lack of oil due to a restricted filter or a dry start up after transmission installation or aggressive programming. Both gears will be black and blue.

CORRECTION: Refer to the 2016 ATSG White Seminar Manual for electrical ground failure information. Check pump bushing to converter hub clearance with a feeler gauge as shown in figure 2. Minimum clearance should be .0025" to .0045". If pump bushing clearance is too tight, the bushing could seize to the converter hub and begin generating metal which can get in between the inner pump gear and the pump separator plate welding them together. This will look like it was caused by a ground failure. Tolerances and alignment are critical to the survival of this pump.

It is best to use a pump alignment tool that centers the bushing to the stator tube such as the Transgo® 5R1-PMP-Align.

If bushing replacement is unavoidable, be sure to press the bushing into place slightly below flush with the bushing lube groove aligned with the lube passage in the pump body as seen in figure 3. Durabond® now makes a bushing with more clearance, check with your parts supplier.

NOTE: If the original pump bushing is in good condition, it is best not to replace it. The pump may have an offset bushing bore from the factory which required the bushing to be machined in place.

A quick and easy test for the pump body and gears is to put the pump body onto the converter hub with the inner gear indexed to the slots in the hub. Rotate the pump body 360° as seen in figure 4 while feeling for any tight spots or binding. Binding or tight spots are the result of problems in the gear pocket, the gears themselves, the converter hub or the pump bushing.

CAUSE: The Damage to the pump gear shown in figure 5 is caused by constant high line pressure due to aggressive programming. Constant high line pressure accelerates the wear on the inner pump gear. Check the fit of the inner gear on the converter hub for binding or excessive rocking.

Continued ☞

FORD 5R110W

FRONT PUMP DAMAGE

CORRECTION: Typically with stock programming on light throttle is 150 to 170 psi and is very reactive to engine load. On hard throttle upshifts it's not unusual to have 200 to 235 psi on the pressure gauge. On full throttle the may spike to 280 psi.

Any programming that commands 300 psi of line pressure in forward gears is unacceptable. Excessive stall time such as at the drag strip can also cause damage to the pump.

The original inner and outer pump gears have identification marks as seen in figure 6. These marks must face out when installed into the pump body. This will also ensure that the chamfered

side of the outer gear is facing into the pump body also seen in figure 6. If these marks are not visible when the gears are installed, the pump gears could seize shortly after overhaul and may even be broken. Be sure to check gear face clearance across the top of the gears and pump body, .0015" to .0025" should be seen.

Always lubricate the pump pocket and gears with clean transmission fluid. It is also a good practice to pour three to four quarts of fluid into the converter before installation, refer to figure 7.

A special thank you to Transgo® for their assistance in making this bulletin possible.

FORD 5R110W

FRONT PUMP DAMAGE

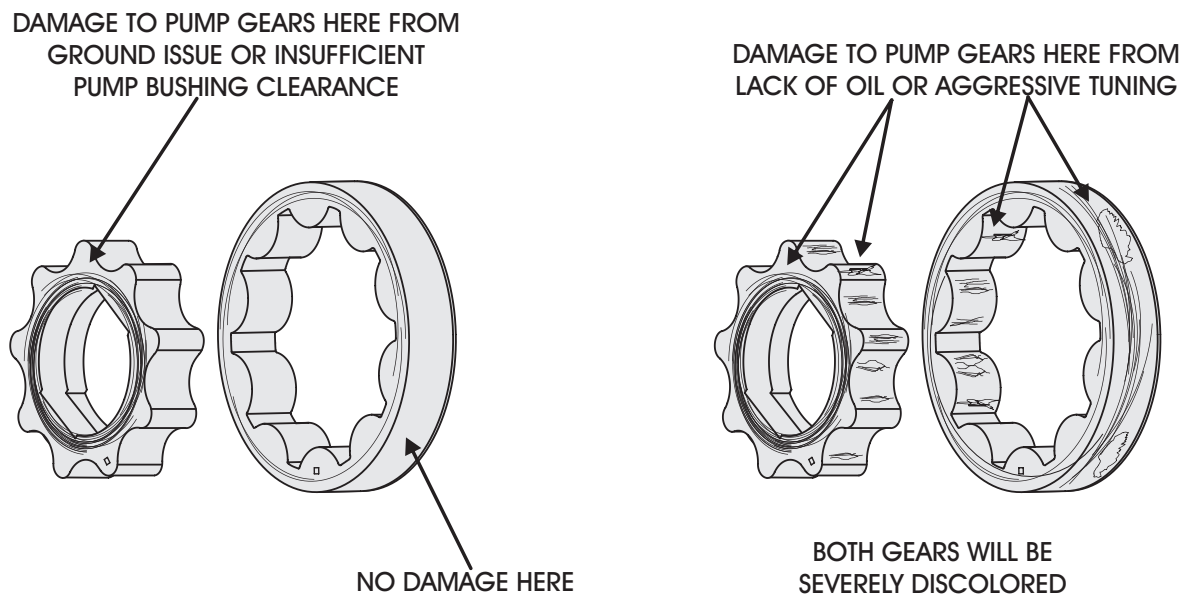

Copyright © 2021 ATSG

Figure 1

PUMP TO CONVERTER HUB CLEARANCE

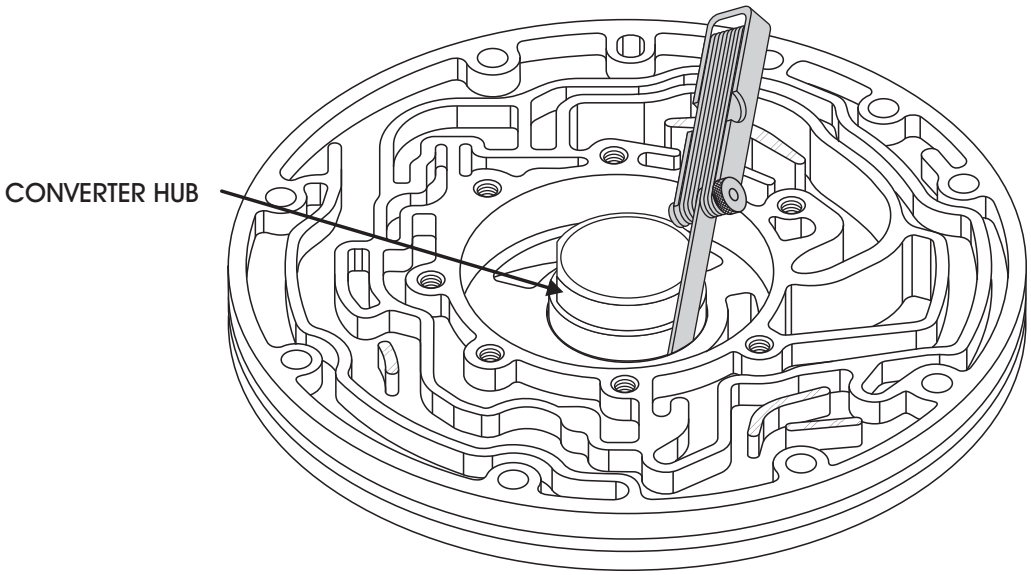

MINIMUM CLEARANCE - .0025”
MAXIMUM CLEARANCE - .0045”

Copyright © 2021 ATSG

Figure 2

FORD 5R110W

FRONT PUMP DAMAGE

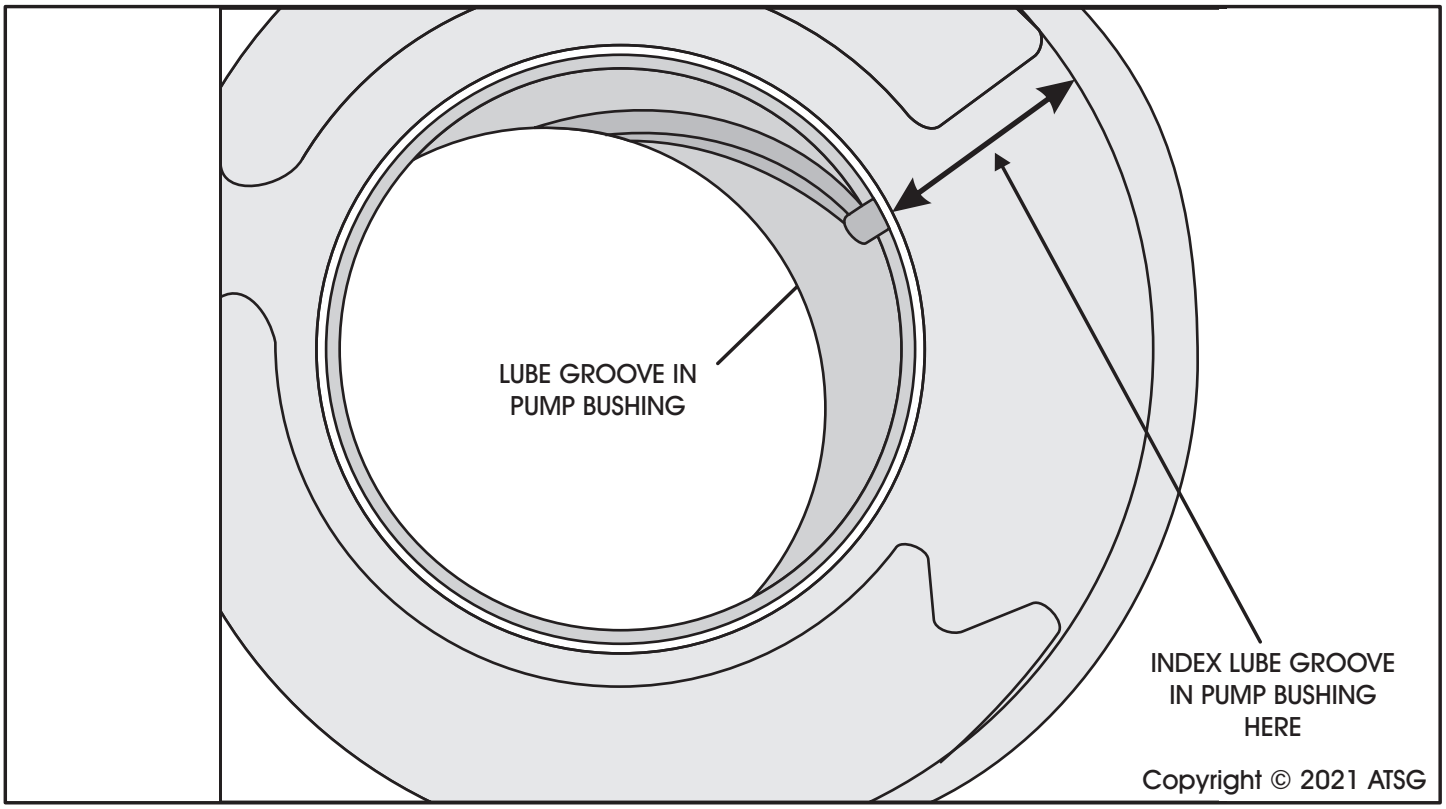

Figure 3

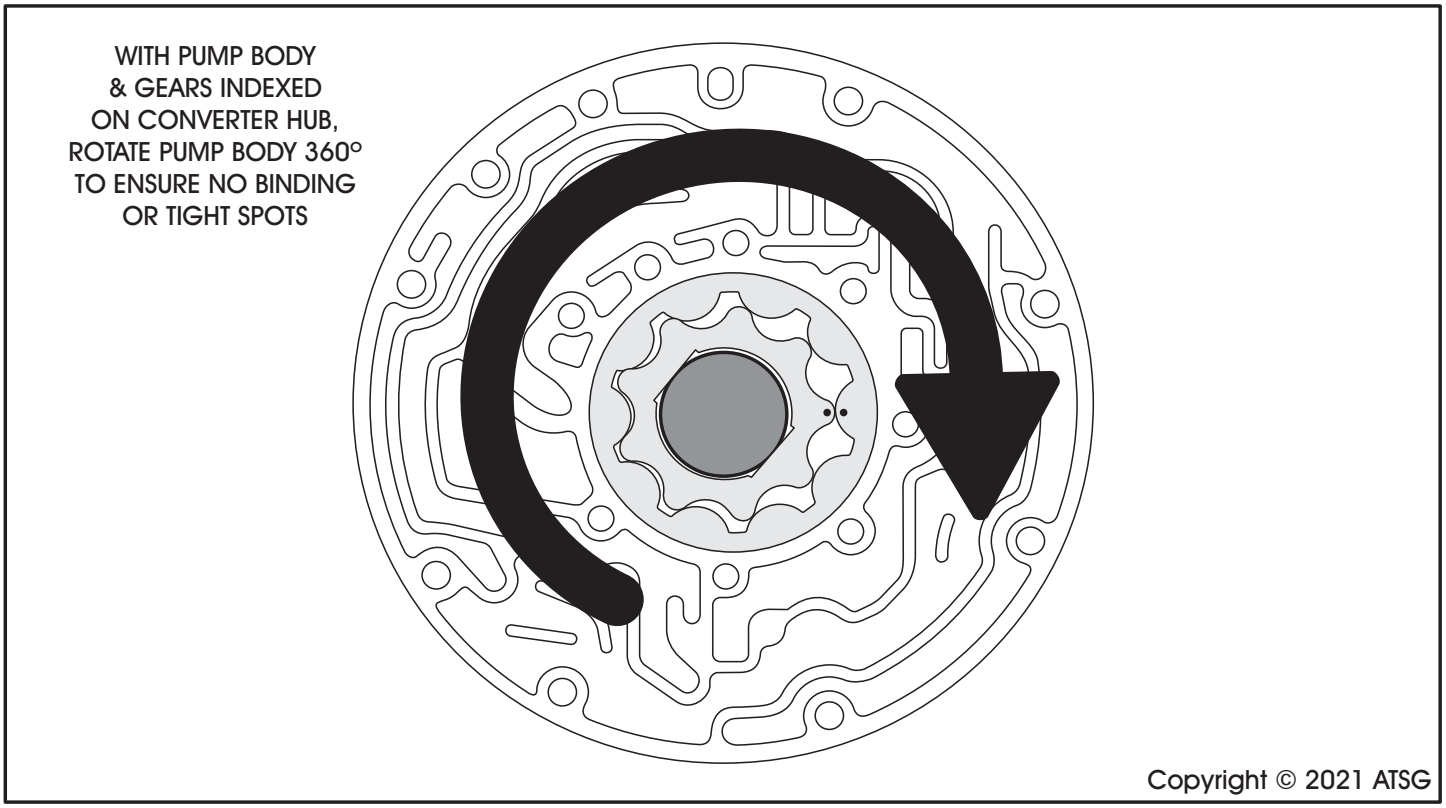

Figure 4

FORD 5R110W

FRONT PUMP DAMAGE

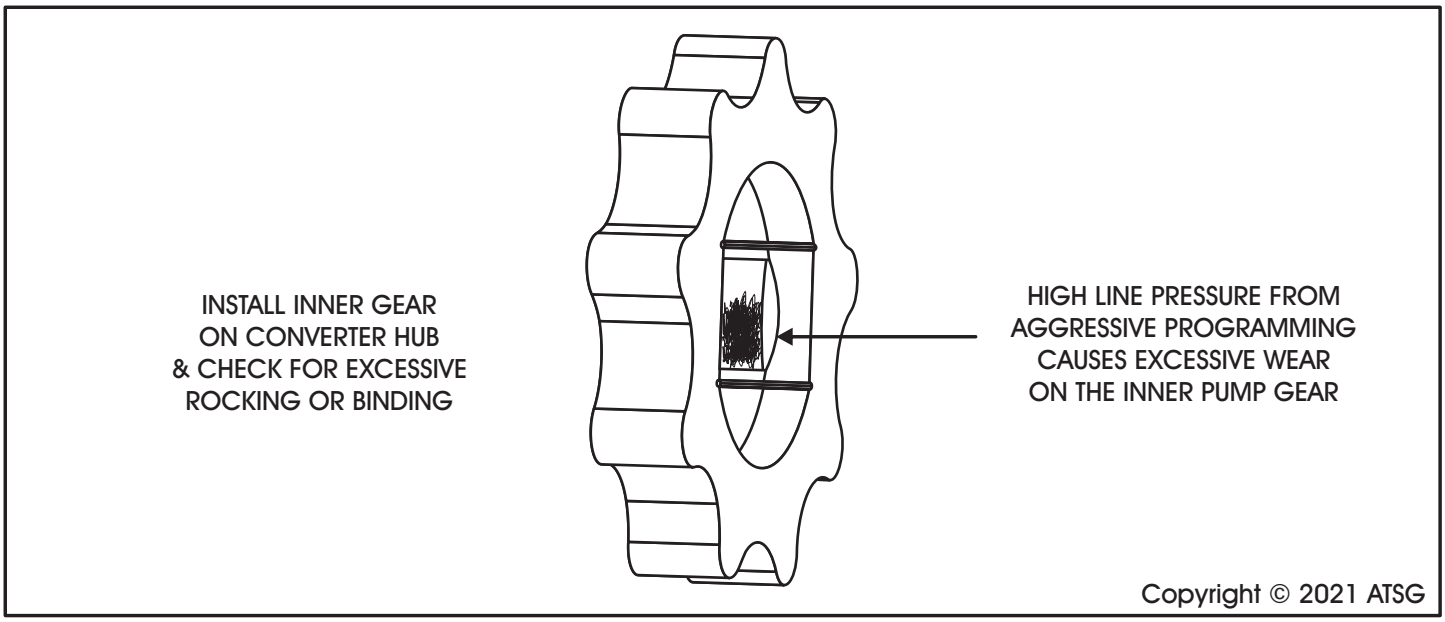

Figure 5

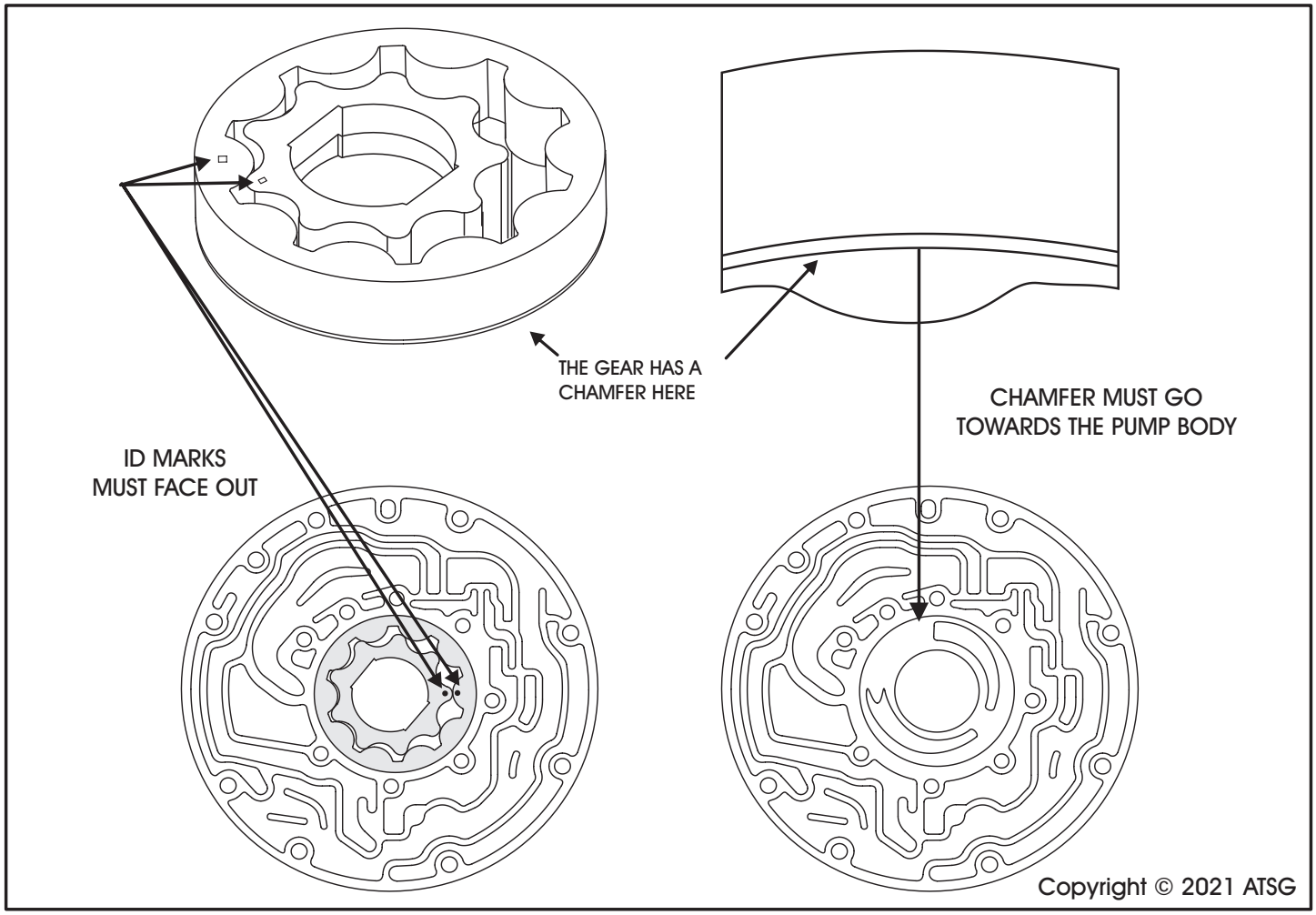

Figure 6

FORD 5R110W

FRONT PUMP DAMAGE

Fluid Fill:

When the transmission has been overhauled and is ready to be installed back into the vehicle it is recommended to pour approximately 3 to 4 Quarts (2.8 to 3.7 Liters) of Mercon® LV fluid into the replacement torque converter before installation into the transmission.

Once the transmission is installed into the vehicle 8 to 10 Quarts (7.5 to 9.5 Liters) of Mercon® LV fluid should be poured into the filler tube as an initial fill.

Important: Start the engine and let it run 15 seconds then shut the engine off. Add 5 more Quarts (4.7 Liters) and restart the engine and complete the fill procedure.

With the transmission at an operating temperature of 150°F to 185°F (66°C to 85°C) the fluid level should be brought to it's final fluid level using the fluid level indicator stick to check it using the illustration and chart below.

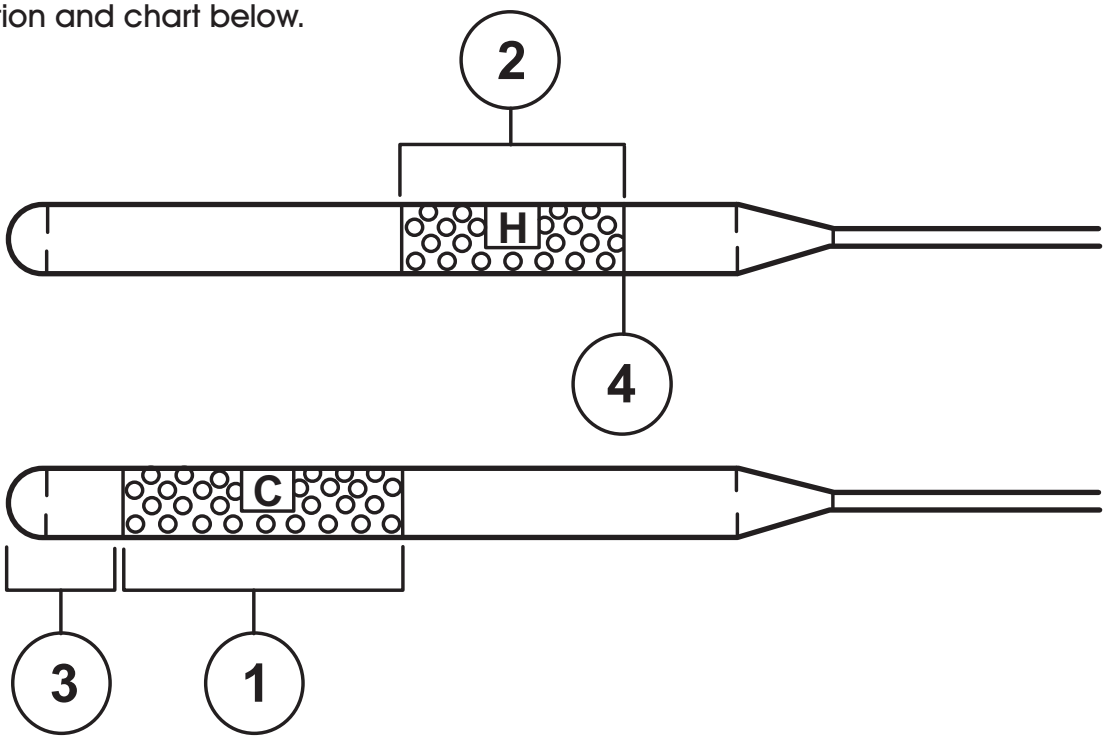

ITEM	DESCRIPTION
1	Cold temperature range.
2	Normal operating temperature.
3	Do Not Drive If Below This Level And Ambient Temperature Is Above 50°F (10°C) (Underfull). Recheck transmission fluid level at normal operating temperature and adjust as required.
4	Do Not Drive Level (Overfull). Remove excess transmission fluid. Recheck transmission fluid level at normal operating temperature and adjust as required.

NOTE: The fluid capacities given here are factory recommendations. They do not apply to the addition of higher capacity coolers and deeper performance oil pans. It is also a know practice in the aftermarket transmission repair industry to overfill these transmissions which should be carefully monitored to avoid aeration and overheating.

Figure 7