CHRYSLER/DODGE 62TE

1-2 OR 2-3 NEUTRAL

COMPLAINT: 2007 and Up Chrysler/Dodge vehicles equipped with the 62TE transaxle may exhibit a complaint of a 1-2 or 2-3 neutral upshift, which commonly occurs after overhaul, resulting in immediate limp mode. Note: Limp mode is 3rd gear, and if there is a neutral on the 2-3 upshift, limp mode in drive will result in a no move condition until the ignition is cycled.

CAUSE: The cause may be,

1. For a Neutral on a 1-2 upshift, worn sealing ring lands on the Low Clutch housing causing a severe pressure loss to the Direct Clutch. Refer to Figures 1 and 2 for a component and solenoid application chart and note that during the 1-2 upshift , the Direct Clutch comes on and causes the pinion shaft to turn 1:1. See Figure 3 for a location of the Direct Clutch sealing rings and Piston.
2. For a Neutral on a 2-3 upshift, during the overhaul process, the feed pipe for the 2-4 clutch was put in backwards causing a severe leak in the 2-4 Clutch. Refer to Figures 1 and 2 for a component and solenoid application chart and note that during the 2-3 upshift the 2-4 Clutch is applied, a severe leak will cause a neutral on the 2-3 and a neutral when in limp mode as well. See Figure 4 for a location of the 2-4 feed pipe.

CORRECTION: To correct this condition,

1. Refer to Figure 3 and check for worn Sealing rings on the Low Clutch housing. The housing will need to be replaced if there is wear. Refer to service information for the part number of the housing. If the ring lands are not worn, remove the piston from the Direct Clutch and replace as necessary.
2. For a Neutral on a 2-3 upshift, during the overhaul process, the feed pipe for the 2-4 clutch was put in backwards causing a severe leak in the 2-3 Clutch. See Figure 4 for location and direction.

SERVICE INFORMATION:

LOW CLUTCH HOUSING (Chrysler part number).....1-68029389-AA
Note: Housing comes completely assembled, piston included.

Special thanks to
Bob at AAMCO
Las Vegas, NV

CLUTCH APPLICATION CHART & COMPONENT LOCATIONS

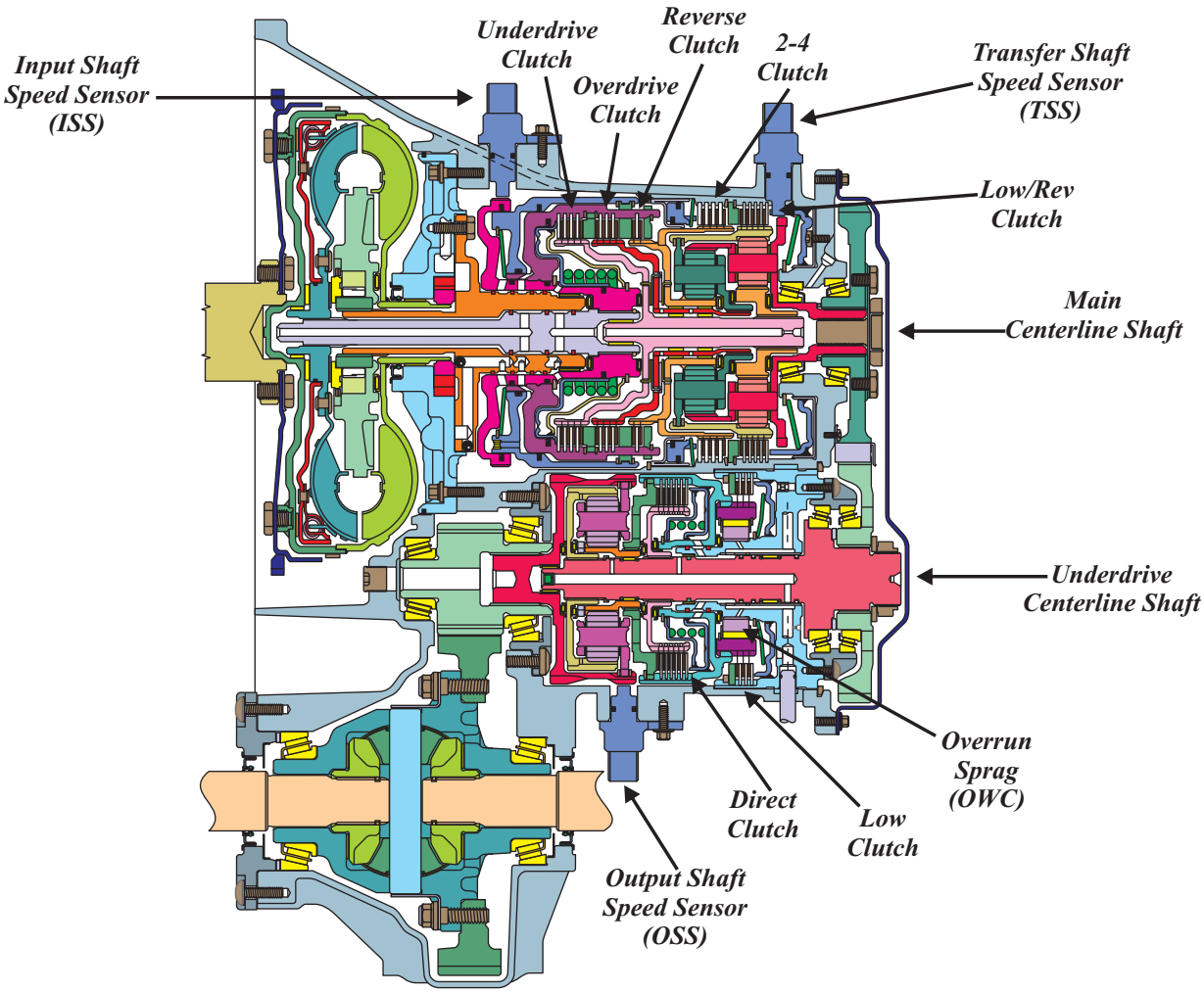

62TE		ELEMENTS APPLIED							
GEAR	RATIO	UD	OD	R	2-4	L-R	LC	DC	OWC
1	4.127	X				X	(X)		H
2	2.842	X				X		X	
3*	2.284	X			X		X‡		H
4’	1.573	X			X			X	
4	1.452	X	X				X‡		H
5	1.000	X	X					X	
6	0.689		X		X			X	
R	3.215			X		X	X		

* Limp-in Mode
‡ Applied in coast only

(X) On in manual low. In OD-1 “On” at launch; “Off” at 150 rpm output speed
4’ - Four Prime

Copyright © 2012 ATSG

Figure 1

SOLENOID, PRESSURE SWITCH AND CLUTCH APPLICATION CHART

			Solenoid Status								Pressure Switch Status					Clutch Status						
GEAR	RATIO	LP (PSI)	VFS	PWM	PWM	PWM	PWM	PWM	PWM	VFS	OD	L/R	2-4	LC	DR	UD	OD	L/R	2-4	LC	DR	REV
			LP	UD	OD	PND L/R	2-4 R-L/R	LC	DR	LU												
			%DC	NA	NV	NV	NA	NV	NV	%DC												
P/N		135	dcc			X						X						X				
Rev	3.215	235	dcc															X		X		X
OD-1	4.127	135	dcc	X		X	X	X(a)				X		X(a)		X		X		X(a)		
OD-2	2.842	135	dcc	X		X	X		X			X			X	X		X			X	←
OD-3	2.284	135	dcc					X		(dcc)			X	X		X			X	X		←
Default	2.284	135	dcc													X			X			←
OD-4′	1.573	135	dcc						X	(dcc)			X		X	X			X		X	
OD-4	1.452	95	dcc		X		X	X		dcc	X			X		X	X			X		←
OD-5	1.000	95	dcc		X		X		X	dcc	X				X	X	X				X	
OD-6	0.689	95	dcc	X	X				X	dcc	X		X		X		X		X		X	←

(a) released after output exceeds 150rpm. Not released in Manual-1
dcc- duty cycle control
(dcc) - overheat strategy only
4′ - fourth prime
← - 2-3, 3-2, 4-2 - Double Swap Shifts
← - 6-4′ - Kickdown to fourth prime

Copyright © 2012 ATSG

Figure 2

LOW AND DIRECT CLUTCH LOCATION

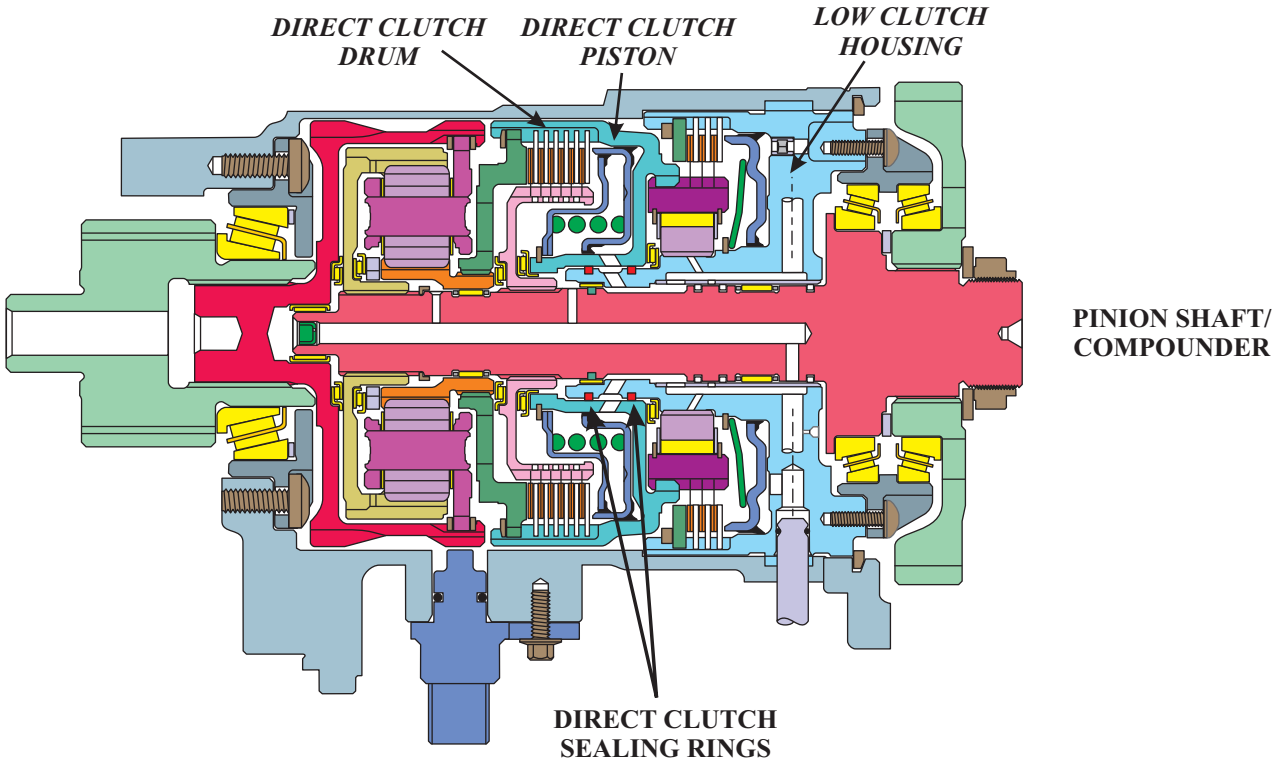

LOW CLUTCH HOUSING PASSAGE IDENTIFICATION AND DIRECT CLUTCH SEALING RING INFORMATION

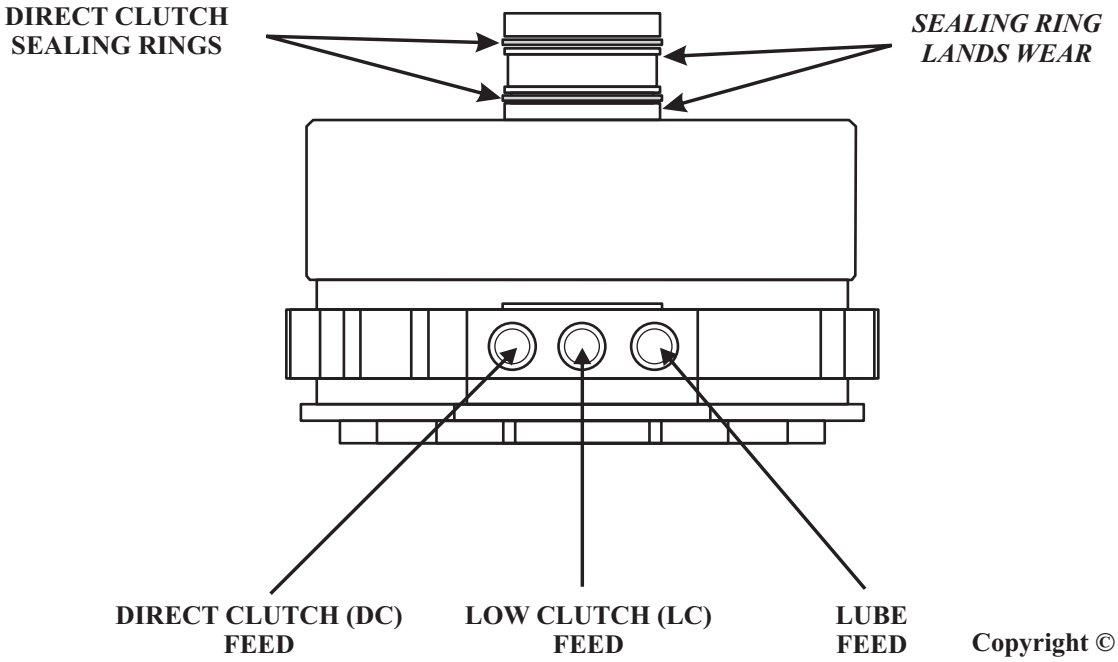

Copyright © 2012 ATSG

Figure 3

2-4 CLUTCH OIL SUPPLY PIPE LOCATION

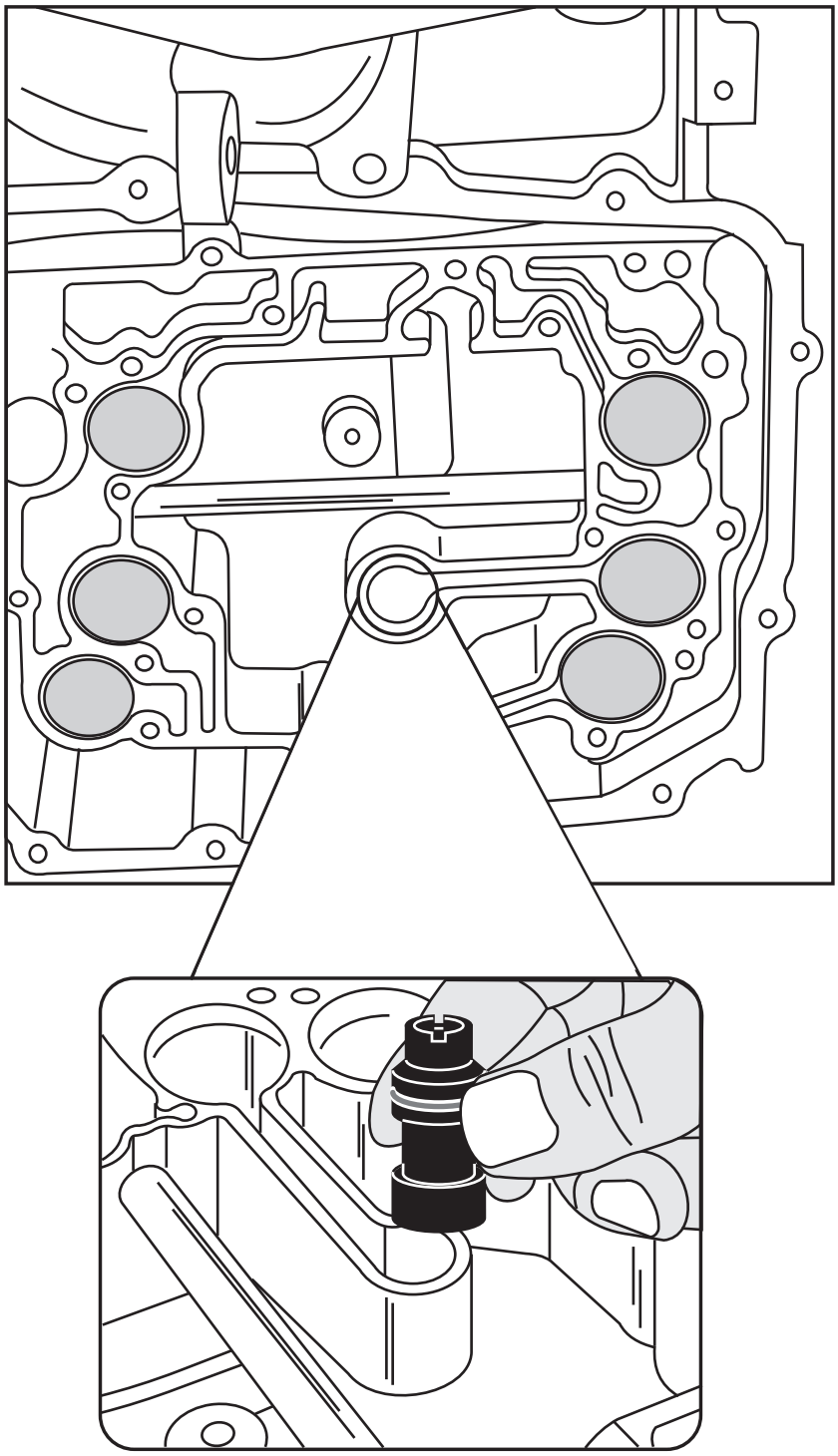

2-4 CLUTCH OIL SUPPLY PIPE AND O'RING

Copyright © 2012 ATSG

Figure 4